Downloaded from http://www.everyspec.com

MIL-STD-117B
15 MARCH 1963

SUPERSEDING
MIL-STD-117A
27 MARCH 1959

MILITARY STANDARD

GAGES, RING. THREAD,

LO (NOT GO)

AND

RELATED THREAD SETTING PLUG GAGES,
GO AND NOT GO PLAIN PLUG MINOR DIAMETER
ACCEPTANCE CHECK GAGES
FOR
UNIFIED
AND
AMERICAN NATIONAL STANDARD
EXTERNAL THREADS

FED SUP CLASS
5220

Downloaded from http://www.everyspec.com

DEPARTMENT OF DEFENSE
WASHINGTON 25, D.C.

Gages; Ring, Thread, LO (Not Go) and Related Thread Setting Plug Gages, Go & Not Go Plain Plug Minor Diameter Acceptance Check Gages for Unified & American National Standard External Threads

Mil-Std-117B

1. This standard has been approved by the Department of Defense and is mandatory for use by the Departments of the Army, the Navy, and the Air Force, effective 15 March 1963.

2. Recommended corrections, additions, or deletions should be addressed to Headquarters, DSA, Standardization Division, Washington 25, D. C.

Downloaded from http://www.everyspec.com

CONTENTS

Paragraph		Page
1.	Scope	1
2.	Referenced Documents	1
3.	Definitions	2
4.	General Requirements	2
4.1.1	Table I, II, and III - Tabulation of Design and Identification Data	2
4.1.2	Table IV - Listing of Mil-Std Part Numbers in Numerical Sequence	3
5.	Procurement	3

FIGURES

Figure		
1.	LO (Not Go) Thread Ring Gage (Thin Blank)	4
2.	Truncated Thread Setting Plug Gage (Taperlock Type)	5
3.	Truncated Thread Setting Plug Gage (Trilock Type)	6
4.	Go Plain Plug Acceptance Check Gage (Wire Type)	7
5.	Not Go Plain Plug Acceptance Check Gage (Wire Type)	8
6.	Method of Extracting Design and Identification Data for LO (Not Go) Thread Ring Gage	9
7.	Method of Extracting Design and Identification Data for Truncated Thread Setting Plug Gage	10
8.	Method of Extracting Design and Identification Data for Go Plain Plug Acceptance Check Gage for Minor Diameter	11
9.	Method of Extracting Design and Identification Data for Not Go Plain Plug Acceptance Check Gage for Minor Diameter	12

TABLES

Table		
I.	Tabulation of Design and Identification Data - Unified Standard Thread	13
II.	Tabulation of Design and Identification Data - American National Standard Thread	81
III.	Tabulation of Design and Identification Data - Special (UNS) Threads	129
IV.	Listing of Mil-Std Part Numbers in Numerical Sequence	133

Downloaded from http://www.everyspec.com

1. Scope

1.1 This standard covers pertinent design data and Mil-Std Part Numbers for American Gage Design Standard, LO (not go), right-hand thread ring gages for the inspection of the minimum limits of Unified Standard classes 1A, 2A, 3A and American National Standard classes 1, 2, 3 external threads.

1.1.1 This standard also covers pertinent design data and Mil-Std Part Numbers for the applicable American Gage Design Standard truncated thread setting plug gages and go and not go plain plug acceptance check gages. The go and not go plain plug acceptance check gages are only applicable to not go thread ring gages having a minor diameter below .375 inch.

1.2 The minimum limits of certain standard external threads are identical for both the Unified Standard and American National Standard thread systems for the same nominal size, threads per inch, and class of fit. In these particular cases one part number is applicable and the thread designation is combined.

Example: .5000-13UNC-3A-3

1.3 The design data for not go thread ring gages employs class "X" gage manufacturing tolerances in accordance with the U. S. Department of Commerce Handbook H28 'Screw-Thread Standards for Federal Services

1.4 The design data for truncated thread setting plug gages employs class "X" gage manufacturing tolerances except that class "W" gage tolerances are specified for "Variation in Lead" and "Half Angle" in accordance with the U. S. Department of Commerce Handbook H28 "Screw-Thread Standards for Federal Services".

2. Referenced Documents

2.1 The issues of the following documents in effect on the date of invitation for bids form a part of this standard.

Standard

Mil-Std-10 Surface Roughness Waviness and Lay

(Application for copies should be addressed to the Superintendent of Documents, U. S. Government Printing Office, Washington 25, D. C.)

Downloaded from http://www.everyspec.com

Specifications

Mil-G-45653 - Gages, Cylindrical Plug and Ring, Plain

Mil-G-45654 - Gages, Plug and Ring, Thread

(Copies of specifications should be obtained from the procuring activity or as directed by the contracting officer.)

Other Publications

U. S. Department of Commerce National Bureau of Standards, Handbook H28 "Screw-Thread Standards for Federal Services"

U. S. Department of Commerce, Commercial Standard CS8 "Gage Blanks"

(Application for copies should be addressed to the Superintendent of Documents, U. S. Government Printing Office, Washington 25, D.C.)

3. Definitions

Not applicable

4. General Requirements

4.1 This standard contains four tables. Table I provides tabulated design data required for manufacture and inspection and is arranged in ascending size sequence according to thread designation for Unified Standard gages. Table II provides tabulated design data required for manufacture and inspection and is also arranged in ascending size sequence according to thread designation for American National Standard gages. Table III contains thread designations previously listed in the standard series of Unified Standard thread (with the exception of 1.0000-14NS-1, 1.0000-14NS-2, and 1.0000-14NS-3 which were listed also in the American National Thread Series). They have been redesignated from Standard to special (UNS) threads and are listed herein for reference purposes. Table IV is a listing of Mil-Std Part Numbers in ascending numerical sequence, and is provided as an aid for locating the required design data contained in tables I, II, and III for any given Mil-Std Part Number.

4.1.1 Tables I, II, and III. Tabulation of Design and Identification Data.

4.1.1.1 Mil-Std Part Numbers and the corresponding thread designations for each not go thread ring gage and related check gages are listed in columns B and C respectively.

4.1.1.2 Column A lists the proper reference to the applicable figure (drawing) for each Mil-Std Part Number.

Downloaded from http://www.everyspec.com

4.1.1.3 Columns B to D inclusive list the identification data for each Mil-Std Part Number and, when applied to the figure (drawing) referenced in column A, provide information for proper marking of the gages. It is not necessary to mark the "5220" indicated in column B on the gage. For example: Mil-Std Part Number 5220-751-5360 may be marked 7515360 on the gage.

4.1.1.4 Columns E to K inclusive list the design data for each Mil-Std Part Number and, when applied to the figure (drawing) referenced in column A, provide data required for manufacture and inspection.

4.1.1.5 The unit of measurement in columns D, E, F, G, H, and K is inches. Column J is ± minutes of a degree.

4.1.1.6 Design data, etc., not specifically covered in this standard shall conform to the latest issue of the documents referenced in paragraph 2 above.

4.1.1.7 The method of extracting design and identification data from tables I, II, and III is illustrated as noted below.

Figure 6.	LO (Not Go) Thread Ring Gage	Page 9
Figure 7.	Truncated Thread Setting Plug Gage	Page 10
Figure 8.	Go Plain Plug Acceptance Check Gage	Page 11
Figure 9.	Not Go Plain Plug Acceptance Check Gage	Page 12

4.1.2 Table IV. Listing of Mil-Std Part Numbers in Numerical Sequence.

4.1.2.1 All Mil-Std Part Numbers contained in this standard are listed in ascending numerical sequence in column A.

4.1.2.2 Column B references the page number in tables I, II, and III where the design and identification data for the applicable Mil-Std Part Number may be found.

5. Procurement.

5.1 The general requirements and tabulated design data contained in this standard are applicable for procurement purposes, as are the referenced manufacturing and inspection specifications.

5.2 Ordering Data. Procurement documents should specify the following:

(a) Title, number, and date of this standard.

(b) Number of Gages required and Mil-Std Part Number.

(c) Place of delivery for acceptance inspection.

Downloaded from http://www.everyspec.com

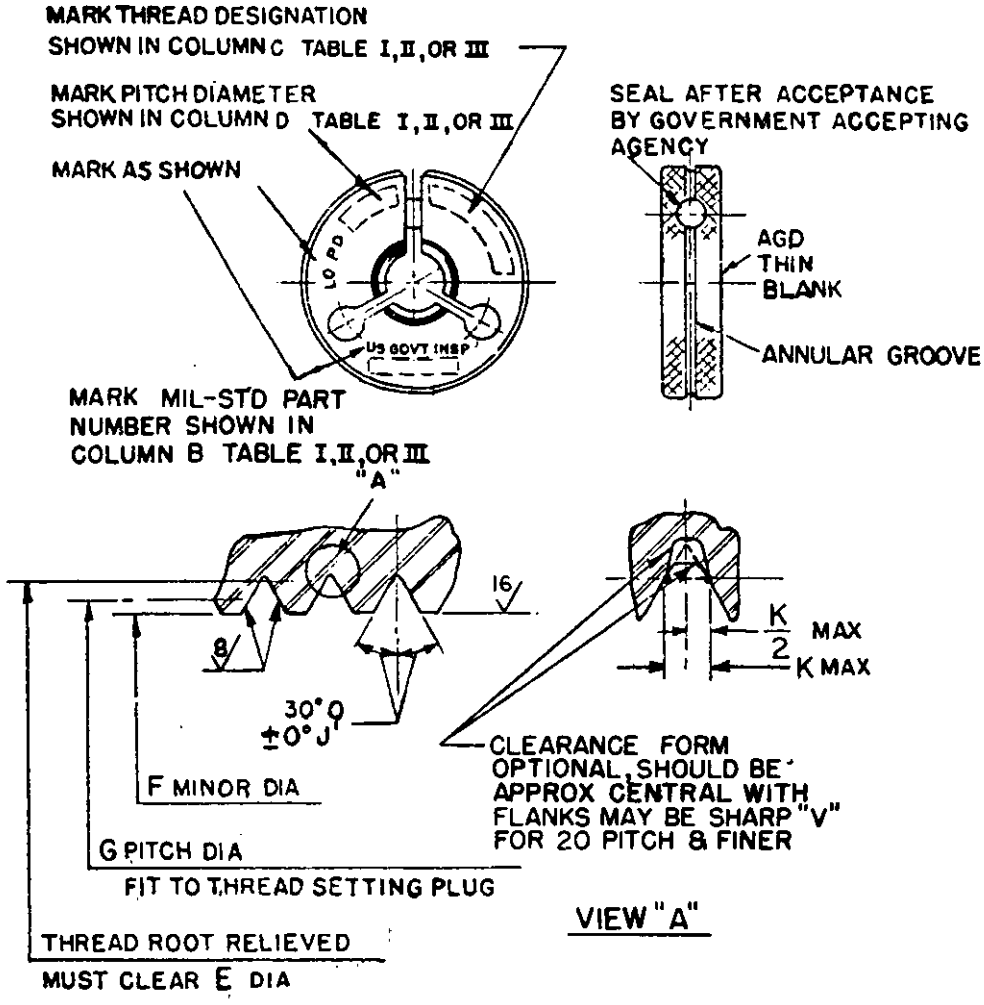

TOLERANCE ON LEAD H

Figure 1. LO (not go) thread ring gage (thin blank)

Downloaded from http://www.everyspec.com

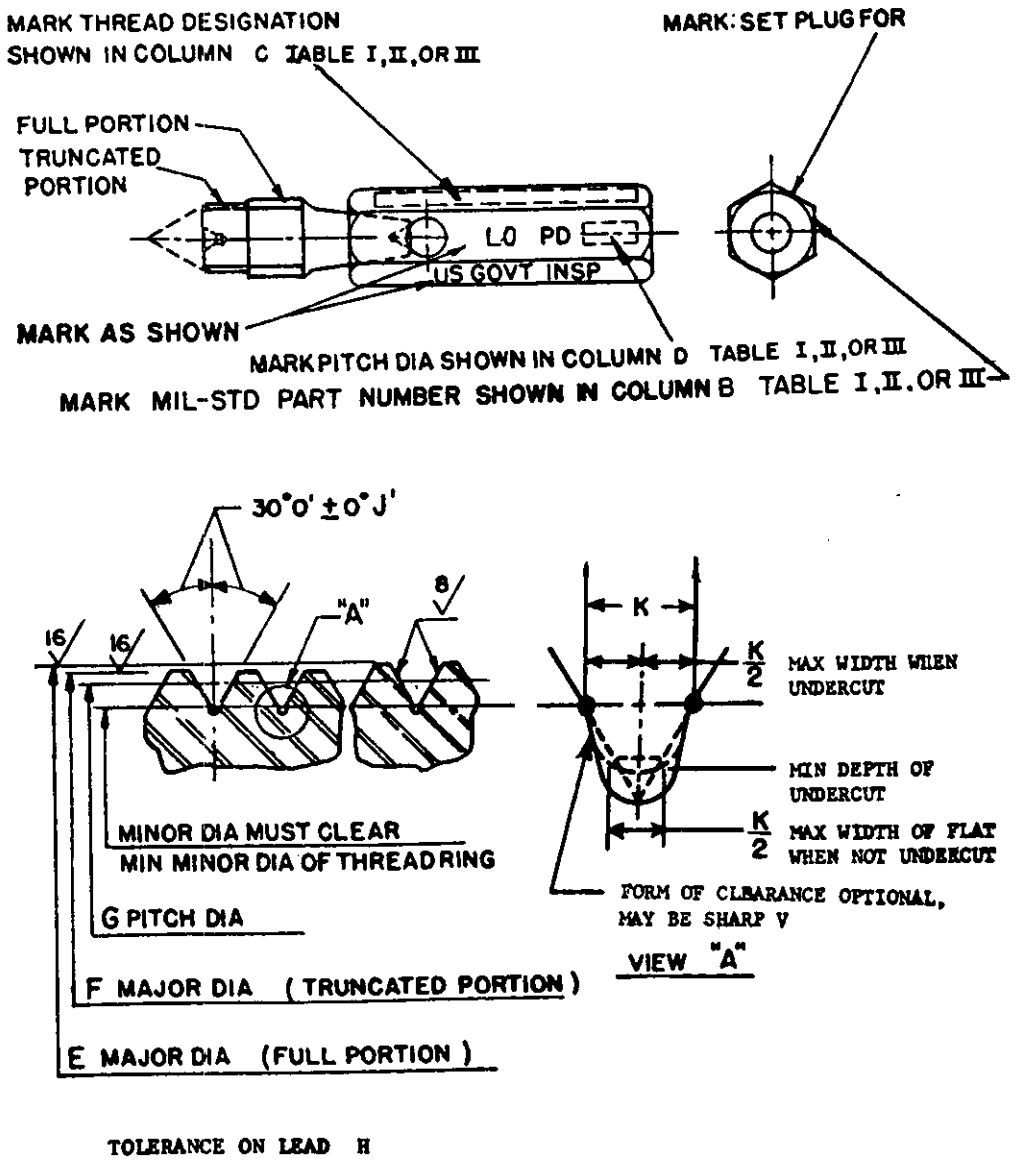

FIGURE 2 *Truncated thread setting plug gage (taperlock type).*

Downloaded from http://www.everyspec.com

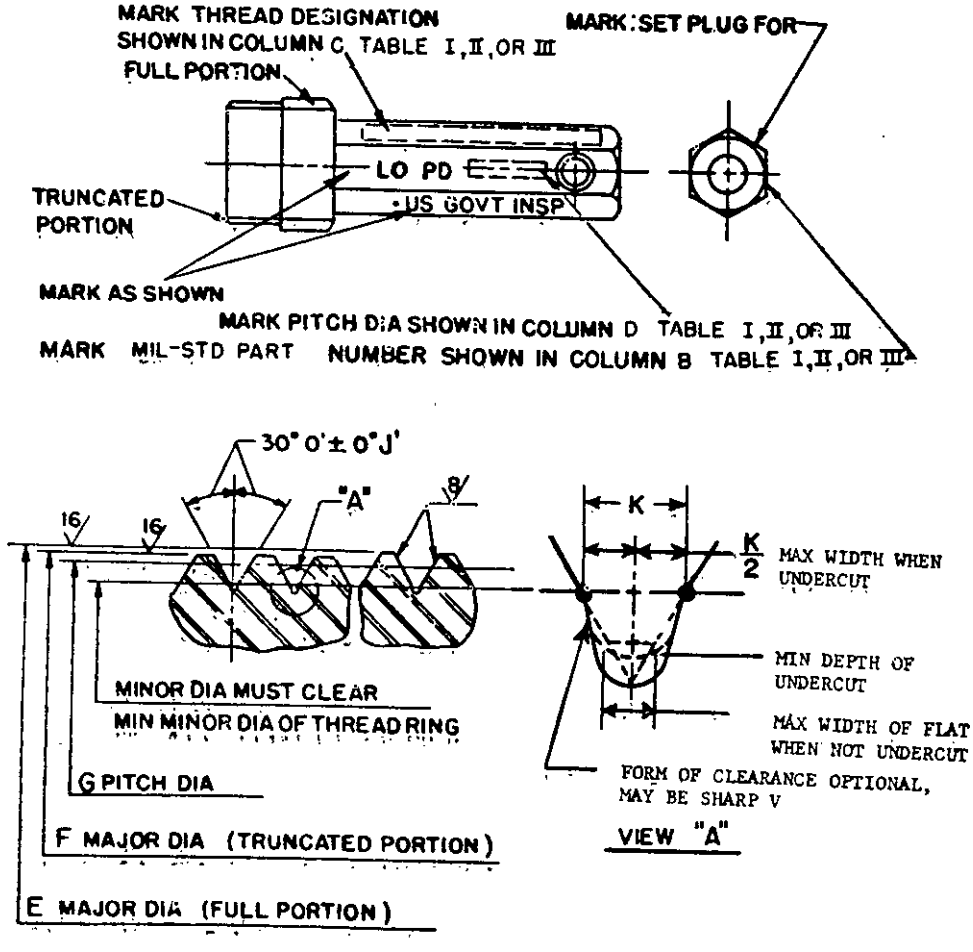

TOLERANCE ON LEAD H

FIGURE 3. *Truncated thread setting plug gage (trilock type).*

Downloaded from http://www.everyspec.com

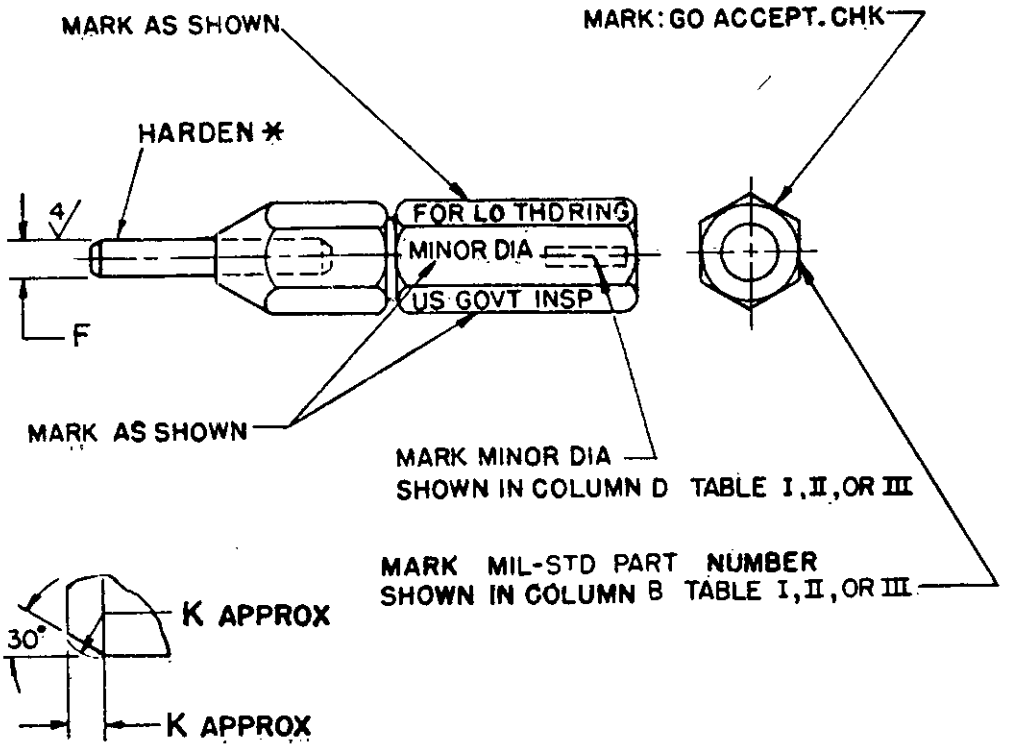

ENLARGED VIEW

CHAMFER OR RADIUS
ON BOTH ENDS OF WIRE

* HARDEN: ROCKWELL OR EQUIVALENT

C55 TO C60 FOR DIA UP TO AND INCL .10
C60 TO C63 FOR DIA ABOVE .10 TO AND INCL .20
C63 TO C66 FOR DIA ABOVE .20

FIGURE 4. *Go plain plug acceptance check gage (wire type).*

Downloaded from http://www.everyspec.com

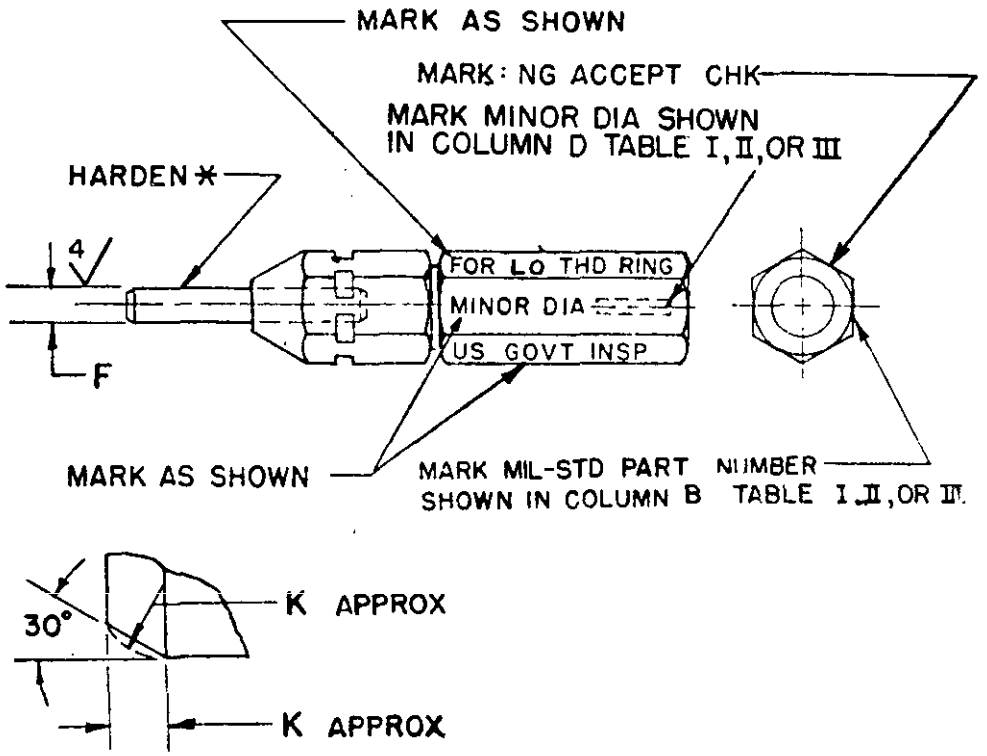

ENLARGED VIEW

CHAMFER OR RADIUS
ON BOTH ENDS OF WIRE

* HARDEN: ROCKWELL OR EQUIVALENT
C55 TO C60 FOR DIA UP TO AND INCL .10
C60 TO C63 FOR DIA ABOVE .10 TO AND INCL .20
C63 TO C66 FOR DIA ABOVE .20

FIGURE 5. *Not go plain plug acceptance check gage (wire type).*

ORDBA Form 20-1577, (OT) 4 May 61

Table I. Tabulation of Design and Identification Data - Unified Standard Thread

FIGURE NO	MARKING ON GAGE HANDLE: MIL-STD. PART NUMBER	MARKING ON GAGE HANDLE: THREAD DESIGNATION	MARKING ON GAGE HANDLE: LO PD / LO PD / MINOR DIA / MINOR DIA	*	GAGE DIMENSIONS: MAJOR DIA / MAJOR DIA FULL PORTION / — / —	GAGE DIMENSIONS: MINOR DIA / MAJOR DIA TRUNCATED PORTION / PLAIN PLUG DIA / PLAIN PLUG DIA	GAGE DIMENSIONS: — / PITCH DIA / — / —	GAGE DIMENSIONS: TOL ON LEAD / —	GAGE DIMENSIONS: HALF ANGLE TOL / —	GAGE DIMENSIONS: ROOT CLEAR / CHAM / CHAM
A	B	C	D	*	E	F	G	H	J	K
1	5220-751-5360	(0) .060-80UNF-2A	.0496	1	.0595	.0469 +.0003		.0002	30	.004
2	5220-751-5361	(0) .060-80UNF-2A	.0496	2	.0584 +.0003	.0550 -.0003	.0496 +.0002	.0001	20	.0031
4	5220-751-1772		.0469	3		.04690 -.00004				.008
5	5220-751-1773		.0472	4		.04720 +.00004				.008
1	5220-751-5364	(0) .060-80UNF-3A-3	.0506	1	.0600	.0479 +.0003		.0002	30	.004
2	5220-751-5365	(0) .060-80UNF-3A-3	.0506	2	.0594 +.0003	.0560 -.0003	.0506 +.0002	.0001	20	.0031
4	5220-751-1780		.0479	3		.04790 -.00004				.008
5	5220-751-1781		.0482	4		.04820 +.00004				.008
1	5220-751-5368	(1) .073-64UNC-2A	.0603	1	.0724	.0569 +.0004		.0002	30	.005
2	5220-751-5369	(1) .073-64UNC-2A	.0603	2	.0717 +.0004	.0671 -.0004	.0603 +.0002	.0001	20	.0039
4	5220-751-5370		.0569	3		.05690 -.00004				.008
5	5220-751-5371		.0573	4		.05730 +.00004				.008
1	5220-751-5372	(1) .073-64UNC-3A	.0614	1	.0732					.005
2	5220-751-5373	(1) .073-64UNC-3A	.0614	2	.0728					.0039
4	5220-751-5374		.0580	3						.008
5	5220-751-5375		.0584	4						.008
1	5220-751-5376	(1) .073-72UNF-2A	.0615	1	.0724					.004
2	5220-751-5377	(1) .073-72UNF-2A	.0615	2	.0715					.0035
4	5220-751-1796		.0585	3						.008
5	5220-751-1797		.0588	4		.05880 +.00004				.008
1	5220-751-5380	(1) .073-72UNF-3A	.0626	1	.0730	.0596 +.0003		.0002	30	.004
2	5220-751-5381	(1) .073-72UNF-3A	.0626	2	.0726 +.0003	.0686 -.0003	.0626 +.0002	.0001	20	.0035
4	5220-751-5382		.0596	3	—	.05960 -.00004				.008
5	5220-751-5383		.0599	4		.05990 +.00004				.008

FIGURE 6: EXTRACTING DATA FOR LO (Not Go) THREAD RING GAGE
NOTE: Numbers "1" listed in the column marked asterisk (*) indicate the applicable lines for "Not Go Thread Ring Gage" data.

* 1. LO (Not Go) Thread Ring Gage
2. Truncated Thread Setting Plug Gage
3. Go Plain Plug Acceptance Check Gage for Minor Diameter
4. Not Go Plain Plug Acceptance Check Gage for Minor Diameter

Figure 6. Method of Extracting Design and Identification Data for LO (Not Go) Thread Ring Gage.

Downloaded from http://www.everyspec.com

ORDBA Form 20-1577, (OT) 4 May 61

Table I. Tabulation of Design and Identification Data - Unified Standard Thread

FIGURE NO.	MARKING ON GAGE HANDLE				GAGE DIMENSIONS					
	MIL-STD PART NUMBER	THREAD DESIGNATION	LO PD	1	MAJOR DIA	MINOR DIA		TOL ON LEAD	HALF ANGLE TOL	ROOT CLEAR
			LO PD	2	MAJOR DIA FULL PORTION	MAJOR DIA TRUNCATED PORTION	PITCH DIA			
			MINOR DIA	3		PLAIN PLUG DIA				CHAM
			MINOR DIA	4		PLAIN PLUG DIA				CHAM
A	B	C	D	*	E	F	G	H	J	K
1	5220-751-5360	(0) .060-80UNF-2A	.0496	1	.0595	.0469 +.0003		.0002	30	.004
2	5220-751-5361	(0) .060-80UNF-2A	.0496	2	.0584 +.0003	.0550 -.0003	.0496 +.0002	.0001	20	.0031
4	5220-751-1772		.0469	3		.04690 -.00004				.008
5	5220-751-1773		.0472	4		.04720 +.00004				.008
1	5220-751-5364	(0) .060-80UNF-3A-3	.0506	1	.0600	.0479 +.0003		.0002	30	.004
2	5220-751-5365	(0) .060-80UNF-3A-3	.0506	2	.0594 +.0003	.0560 -.0003	.0506 +.0002	.0001	20	.0031
4	5220-751-1780		.0479	3		.04790 -.00004				.008
5	5220-751-1781		.0482	4		.04820 +.00004				.008
1	5220-751-5368	(1) .073-64UNC-2A	.0603	1	.0724	.0569 +.0004		.0002	30	.005
2	5220-751-5369	(1) .073-64UNC-2A	.0603	2	.0717 +.0004	.0671 -.0004	.0603 +.0002	.0001	20	.0039
4	5220-751-5370		.0569	3		.05690 -.00004				.008
5	5220-751-5371		.0573	4		.05730 +.00004				.008
1	5220-751-5372	(1) .073-64UNC-3A	.0614	1	.0732				0	.005
2	5220-751-5373	(1) .073-64UNC-3A	.0614	2	.0728				0	.0039
4	5220-751-5374		.0580	3						.008
5	5220-751-5375		.0584	4						.008
1	5220-751-5376	(1) .073-72UNF-2A	.0615	1	.0724				0	.004
2	5220-751-5377	(1) .073-72UNF-2A	.0615	2	.0715				0	.0035
4	5220-751-1796		.0585	3						.008
5	5220-751-1797		.0588	4						.008
1	5220-751-5380	(1) .073-72UNF-3A	.0626	1	.0730	.0596 +.0003		.0002	30	.004
2	5220-751-5381	(1) .073-72UNF-3A	.0626	2	.0726 +.0003	.0686 -.0003	.0626 +.0002	.0001	20	.0035
4	5220-751-5382		.0596	3		.05960 -.00004				.008
5	5220-751-5383		.0599	4		.05990 +.00004				.008

FIGURE 7: EXTRACTING DATA FOR TRUNCATED THREAD SETTING PLUG GAGE
NOTE: Numbers "2" listed in the column marked asterisk (*) indicate the applicable lines for "Truncated Thread Setting Plug Gage" data.

1. LO (Not Go) Thread Ring Gage
* 2. Truncated Thread Setting Plug Gage
3. Go Plain Plug Acceptance Check Gage for Minor Diameter
4. Not Go Plain Plug Acceptance Check Gage for Minor Diameter

Figure 7. Method of Extracting Design and Identification Data for Truncated Thread Setting Plug Gage.

Downloaded from http://www.everyspec.com

ORDBA Form 20-1577, (OT) 4 May 61

Table I. Tabulation of Design and Identification Data - Unified Standard Thread

FIGURE NO.	MARKING ON GAGE HANDLE: MIL-STD PART NUMBER	MARKING ON GAGE HANDLE: THREAD DESIGNATION	LO PD / LO PD / MINOR DIA / MINOR DIA	GAGE DIMENSIONS: 1 / 2 / 3 / 4	MAJOR DIA / MAJOR DIA FULL PORTION / ——— / ———	MINOR DIA / MAJOR DIA TRUNCATED PORTION / PLAIN PLUG DIA / PLAIN PLUG DIA	——— / ——— / ——— / ———	TOL ON LEAD	HALF ANGLE TOL	ROOT CLEAR / CHAM / CHAM
A	B	C	D	*	E	F	G	H	J	K
1	5220-751-5360	(0) .060-80UNF-2A	.0496	1	.0595	.0469 +.0003		.0002	30	.004
2	5220-751-5361	(0) .060-80UNF-2A	.0496	2	.0584 +.0003	.0550 -.0003	.0496 +.0002	.0001	20	.0031
4	5220-751-1772		.0469	3		.04690 -.00004				.008
5	5220-751-1773		.0472	4		.04720 +.00004				.008
1	5220-751-5364	(0) .060-80UNF-3A-3	.0506	1	.0600	.0479 +.0003		.0002	30	.004
2	5220-751-5365	(0) .060-80UNF-3A-3	.0506	2	.0594 +.0003	.0560 -.0003	.0506 +.0002	.0001	20	.0031
4	5220-751-1780		.0479	3		.04790 -.00004				.008
5	5220-751-1781		.0482	4		.04820 +.00004				.008
1	5220-751-5368	(1) .073-64UNC-2A	.0603	1	.0724	.0569 +.0004		.0002	30	.005
2	5220-751-5369	(1) .073-64UNC-2A	.0603	2	.0717 +.0004	.0671 +.0004	.0603 +.0002	.0001	20	.0039
4	5220-751-5370		.0569	3		.05690 -.00004				.008
5	5220-751-5371		.0573	4		.05730 +.00004				.008
1	5220-751-5372	(1) .073-64UNC-3A	.0614	1	.0732					.005
2	5220-751-5373	(1) .073-64UNC-3A	.0614	2	.0728					.0039
4	5220-751-5374		.0580	3						.008
5	5220-751-5375		.0584	4						.008
1	5220-751-5376	(1) .073-72UNF-2A	.0615	1	.0724					.004
2	5220-751-5377	(1) .073-72UNF-2A	.0615	2	.0715					.0035
4	5220-751-1796		.0585	3						.008
5	5220-751-1797		.0588	4						.008
1	5220-751-5380	(1) .073-72UNF-3A	.0626	1	.0730	.0596 +.0003		.0002	30	.004
2	5220-751-5381	(1) .073-72UNF-3A	.0626	2	.0726 +.0003	.0686 -.0003	.0626 +.0002	.0001	20	.0035
4	5220-751-5382		.0596	3		.05960 -.00004				.008
5	5220-751-5383		.0599	4		.05990 +.00004				.008

FIGURE 8: EXTRACTING DATA FOR GO PLAIN PLUG ACCEPTANCE CHECK GAGE FOR MINOR DIAMETER

NOTE: Numbers "3" listed in the column marked asterisk (*) indicate the applicable lines for Go Plain Plug Acceptance Check Gage for Minor Diameter" data.

1. LO (Not Go) Thread Ring Gage
2. Truncated Thread Setting Plug Gage
3. * Go Plain Plug Acceptance Check Gage for Minor Diameter
4. Not Go Plain Plug Acceptance Check Gage for Minor Diameter

Figure 8. Method of Extracting Design and Identification Data for Go Plain Plug Acceptance Check Gage for Minor Diameter.

Downloaded from http://www.everyspec.com

ORDBA Form 20-1577, (OT) 4 May 61

Table I. Tabulation of Design and Identification Data - Unified Standard Thread

FIGURE NO	MARKING ON GAGE HANDLE: MIL-STD PART NUMBER	THREAD DESIGNATION	LO PD / LO PD / MINOR DIA / MINOR DIA	*	GAGE DIMENSIONS: MAJOR DIA / MAJOR DIA FULL PORTION	MINOR DIA / MAJOR DIA TRUNCATED PORTION / PLAIN PLUG DIA / PLAIN PLUG DIA	PITCH DIA	TOL ON LEAD	HALF ANGLE TOL	ROOT CLEAR / CHAM / CHAM
A	B	C	D	*	E	F	G	H	J	K
1	5220-751-5360	(0) .060-80UNF-2A	.0496	1	.0595	.0469 +.0003		.0002	30	.004
2	5220-751-5361	(0) .060-80UNF-2A	.0496	2	.0584 +.0003	.0550 -.0003	.0496 +.0002	.0001	20	.0031
4	5220-751-1772		.0469	3		.04690 -.00004				.008
5	5220-751-1773		.0472	4		.04720 +.00004				.008
1	5220-751-5364	(0) .060-80UNF-3A-3	.0506	1	.0600	.0479 +.0003		.0002	30	.004
2	5220-751-5365	(0) .060-80UNF-3A-3	.0506	2	.0594 +.0003	.0560 -.0003	.0506 +.0002	.0001	20	.0031
4	5220-751-1780		.0479	3		.04790 -.00004				.008
5	5220-751-1781		.0482	4		.04820 +.00004				.008
1	5220-751-5368	(1) .073-64UNC-2A	.0603	1	.0724	.0569 +.0004		.0002	30	.005
2	5220-751-5369	(1) .073-64UNC-2A	.0603	2	.0717 +.0004	.0671 -.0004	.0603 +.0002	.0001	20	.0039
4	5220-751-5370		.0569	3		.05690 -.00004				.008
5	5220-751-5371		.0573	4		.05730 +.00004				.008
1	5220-751-5372	(1) .073-64UNC-3A	.0614	1	.0732					.005
2	5220-751-5373	(1) .073-64UNC-3A	.0614	2	.0728					.0039
4	5220-751-5374		.0580	3						.008
5	5220-751-5375		.0584	4						.008
1	5220-751-5376	(1) .073-72UNF-2A	.0615	1	.0724					.004
2	5220-751-5377	(1) .073-72UNF-2A	.0615	2	.0715					.0035
4	5220-751-1796		.0585	3						.008
5	5220-751-1797		.0588	4						.008
1	5220-751-5380	(1) .073-72UNF-3A	.0626	1	.0730	.0596 +.0003		.0002	30	.004
2	5220-751-5381	(1) .073-72UNF-3A	.0626	2	.0726 +.0003	.0686 -.0003	.0626 +.0002	.0001	20	.0035
4	5220-751-5382		.0596	3		.05960 -.00004				.008
5	5220-751-5383		.0599	4		.05990 +.00004				.008

FIGURE 9: EXTRACTING DATA FOR NOT GO PLAIN PLUG ACCEPTANCE CHECK GAGE FOR MINOR DIAMETER

NOTE: Numbers '4" listed in the column marked asterisk (*) indicate the applicable lines for 'Not Go Plain Plug Acceptance Check Gage for Minor Diameter" data.

1. LO (Not Go) Thread Ring Gage
2. Truncated Thread Setting Plug Gage
3. Go Plain Plug Acceptance Check Gage for Minor Diameter
4. Not Go Plain Plug Acceptance Check Gage for Minor Diameter

Figure 9. Method of Extracting Design and Identification Data for Not Go Plain Plug Acceptance Check Gage for Minor Diameter.

Downloaded from http://www.everyspec.com

ORDBA Form 20-1577, (OT) 4 May 61

Table I. Tabulation of Design and Identification Data - Unified Standard Thread

FIGURE NO.	MARKING ON GAGE HANDLE: MIL-STD PART NUMBER	MARKING ON GAGE HANDLE: THREAD DESIGNATION	MARKING ON GAGE HANDLE:		GAGE DIMENSIONS:					
			LO PD	1	MAJOR DIA	MINOR DIA	———	TOL ON LEAD	HALF ANGLE TOL	ROOT CLEAR
			LO PD	2	MAJOR DIA FULL PORTION	MAJOR DIA TRUNCATED PORTION	PITCH DIA			
			MINOR DIA	3	———	PLAIN PLUG DIA	———	—	—	CHAM
			MINOR DIA	4	———	PLAIN PLUG DIA	———		—	CHAM
A	B	C	D	*	E	F	G	H	J	K
1	5220-751-5360	(0) .060-80UNF-2A	.0496	1	.0595	.0469 +.0003		.0002	30	.004
2	5220-751-5361	(0) .060-80UNF-2A	.0496	2	.0584 +.0003	.0550 -.0003	.0496 +.0002	.0001	20	.0031
4	5220-751-1772		.0469	3		.04690 -.00004				.008
5	5220-751-1773		.0472	4		.04720 +.00004				.008
1	5220-751-5364	(0) .060-80UNF-3A-3	.0506	1	.0600	.0479 +.0003		.0002	30	.004
2	5220-751-5365	(0) .060-80UNF-3A-3	.0506	2	.0594 +.0003	.0560 -.0003	.0506 +.0002	.0001	20	.0031
4	5220-751-1780		.0479	3		.04790 -.00004				.008
5	5220-751-1781		.0482	4		.04820 +.00004				.008
1	5220-751-5368	(1) .073-64UNC-2A	.0603	1	.0724	.0569 +.0004		.0002	30	.005
2	5220-751-5369	(1) .073-64UNC-2A	.0603	2	.0717 +.0004	.0671 -.0004	.0603 +.0002	.0001	20	.0039
4	5220-751-5370		.0569	3		.05690 -.00004				.008
5	5220-751-5371		.0573	4		.05730 +.00004				.008
1	5220-751-5372	(1) .073-64UNC-3A	.0614	1	.0732	.0580 +.0004		.0002	30	.005
2	5220-751-5373	(1) .073-64UNC-3A	.0614	2	.0728 +.0004	.0682 -.0004	.0614 +.0002	.0001	20	.0039
4	5220-751-5374		.0580	3		.05800 -.00004				.008
5	5220-751-5375		.0584	4		.05840 +.00004				.008
1	5220-751-5376	(1) .073-72UNF-2A	.0615	1	.0724	.0585 +.0003		.0002	30	.004
2	5220-751-5377	(1) .073-72UNF-2A	.0615	2	.0715 +.0003	.0675 -.0003	.0615 +.0002	.0001	20	.0035
4	5220-751-1796		.0585	3		.05850 -.00004				.008
5	5220-751-1797		.0588	4		.05880 +.00004				.008
1	5220-751-5380	(1) .073-72UNF-3A	.0626	1	.0730	.0596 +.0003		.0002	30	.004
2	5220-751-5381	(1) .073-72UNF-3A	.0626	2	.0726 +.0003	.0686 -.0003	.0626 +.0002	.0001	20	.0035
4	5220-751-5382		.0596	3		.05960 -.00004				.008
5	5220-751-5383		.0599	4		.05990 +.00004				.008

* 1. LO (Not Go) Thread Ring Gage
2. Truncated Thread Setting Plug Gage
3. Go Plain Plug Acceptance Check Gage for Minor Diameter
4. Not Go Plain Plug Acceptance Check Gage for Minor Diameter

Downloaded from http://www.everyspec.com

ORDBA Form 20-1577, (OT) 4 May 61

Table I. Tabulation of Design and Identification Data - Unified Standard Thread (Continued)

FIGURE NO.	MARKING ON GAGE HANDLE.				GAGE DIMENSIONS					
	MIL-STD PART NUMBER.	THREAD DESIGNATION	LO PD	1	MAJOR DIA	MINOR DIA	—	TOL ON LEAD	HALF ANGLE TOL	ROOT CLEAR
			LO PD	2	MAJOR DIA FULL PORTION	MAJOR DIA TRUNCATED PORTION	PITCH DIA			
			MINOR DIA	3	—	PLAIN PLUG DIA	—	—	—	CHAM
			MINOR DIA	4	—	PLAIN PLUG DIA	—		—	CHAM
A	B	C	D	*	E	F	G	H	J	K
1	5220-751-5384	(2) .086-56UNC-2A	.0717	1	.0854	.0678 +.0004		.0002	30	.006
2	5220-751-5385	(2) .086-56UNC-2A	.0717	2	.0850 +.0004	.0794 -.0004	.0717 +.0002	.0001	20	.0045
4	5220-751-5386		.0678	3		.06780-.00004				.008
5	5220-751-5387		.0682	4		.06820+.00004				.008
1	5220-751-5388	(2) .086-56UNC-3A	.0728	1	.0864	.0689 +.0004		.0002	30	.006
2	5220-751-5389	(2) .086-56UNC-3A	.0728	2	.0860 +.0004	.0805 -.0004	.0728 +.0002	.0001	20	.0045
4	5220-751-5390		.0689	3		.06890-.00004				.008
5	5220-751-5391		.0693	4		.06930+.00004				.008
1	5220-751-5392	(2) .086-64UNF-2A	.0733	1	.0854	.0699 +.0004		.0002	30	.005
2	5220-751-5393	(2) .086-64UNF-2A	.0733	2	.0847 +.0004	.0801 -.0004	.0733 +.0002	.0001	20	.0039
4	5220-751-5394		.0699	3		.06990-.00004				.008
5	5220-751-5395		.0703	4		.07030+.00004				.008
1	5220-751-5396	(2) .086-64UNF-3A	.0744	1	.0862	.0710 +.0004		.0002	30	.005
2	5220-751-5397	(2) .086-64UNF-3A	.0744	2	.0858 +.0004	.0812 -.0004	.0744 +.0002	.0001	20	.0039
4	5220-751-5398		.0710	3		.07100-.00004				.008
5	5220-751-5399		.0714	4		.07140+.00004				.008
1	5220-751-5400	(3) .099-48UNC-2A	.0825	1	.0985	.0780 +.0004		.0002	30	.007
2	5220-751-5401	(3) .099-48UNC-2A	.0825	2	.0981 +.0004	.0915 -.0004	.0825 +.0002	.0001	18	.0052
4	5220-751-5402		.0780	3		.07800-.00004				.015
5	5220-751-5403		.0784	4		.07840+.00004				.015
1	5220-751-5404	(3) .099-48UNC-3A	.0838	1	.0994	.0793 +.0004		.0002	30	.007
2	5220-751-5405	(3) .099-48UNC-3A	.0838	2	.0990 +.0004	.0928 -.0004	.0838 +.0002	.0001	18	.0052
4	5220-751-5406		.0793	3		.07930-.00004				.015
5	5220-751-5407		.0797	4		.07970+.00004				.015

* 1. LO (Not Go) Thread Ring Gage
2. Truncated Thread Setting Plug Gage
3. Go Plain Plug Acceptance Check Gage for Minor Diameter
4. Not Go Plain Plug Acceptance Check Gage for Minor Diameter

Downloaded from http://www.everyspec.com

Table I. Tabulation of Design and Identification Data - Unified Standard Thread (Continued)

FIGURE NO.	MARKING ON GAGE HANDLE: MIL-STD PART NUMBER	THREAD DESIGNATION	LO PD / LO PD / MINOR DIA / MINOR DIA		GAGE DIMENSIONS: MAJOR DIA / MAJOR DIA FULL PORTION / — / —	MINOR DIA / MAJOR DIA TRUNCATED PORTION / PLAIN PLUG DIA / PLAIN PLUG DIA	— / — / PITCH DIA / — / —	TOL ON LEAD	HALF ANGLE TOL	ROOT CLEAR / CHAM / CHAM
A	B	C	D	*	E	F	G	H	J	K
1	5220-751-5408	(3) .099-56UNF-2A	.0845	1	.0983	.0806 +.0004		.0002	30	.006
2	5220-751-5409	(3) .099-56UNF-2A	.0845	2	.0978 +.0004	.0922 -.0004	.0845 +.0002	.0001	20	.0045
4	5220-751-5410		.0806	3		.08060 -.00004				.015
5	5220-751-5411		.0810	4		.08100 +.00004				.015
1	5220-751-5412	(3) .099-56UNF-3A	.0858	1	.0994	.0819 +.0004		.0002	30	.006
2	5220-751-5413	(3) .099-56UNF-3A	.0858	2	.0990 +.0004	.0935 -.0004	.0858 +.0002	.0001	20	.0045
4	5220-751-5414		.0819	3		.08190 -.00004				.015
5	5220-751-5415		.0823	4		.08230 +.00004				.015
1	5220-751-5416	(4) .112-40UNC-2A	.0925	1	.1116	.0871 +.0004		.0002	20	.008
2	5220-751-5417	(4) .112-40UNC-2A	.0925	2	.1112 +.0004	.1033 -.0004	.0925 +.0002	.0001	15	.0062
4	5220-751-5418		.0871	3		.08710 -.00004				.015
5	5220-751-5419		.0875	4		.08750 +.00004				.015
1	5220-751-5420	(4) .112-40UNC-3A	.0939	1	.1124	.0885 +.0004		.0002	20	.008
2	5220-751-5421	(4) .112-40UNC-3A	.0939	2	.1120 +.0004	.1047 -.0004	.0939 +.0002	.0001	15	.0062
4	5220-751-5422		.0885	3		.08850 -.00004				.015
5	5220-751-5423		.0889	4		.08890 +.00004				.015
1	5220-751-5424	(4) .112-48UNF-2A	.0954	1	.1114	.0909 +.0004		.0002	30	.007
2	5220-751-5425	(4) .112-48UNF-2A	.0954	2	.1110 +.0004	.1044 -.0004	.0954 +.0002	.0001	18	.0052
4	5220-751-5426		.0909	3		.09090 -.00004				.015
5	5220-751-5427		.0913	4		.09130 +.00004				.015
1	5220-751-5428	(4) .112-48UNF-3A	.0967	1	.1124	.0922 +.0004		.0002	30	.007
2	5220-751-5429	(4) .112-48UNF-3A	.0967	2	.1120 +.0004	.1057 -.0004	.0967 +.0002	.0001	18	.0052
4	5220-751-5430		.0922	3		.09220 -.00004				.015
5	5220-751-5431		.0926	4		.09260 +.00004				.015

* 1. LO (Not Go) Thread Ring Gage
2. Truncated Thread Setting Plug Gage
3. Go Plain Plug Acceptance Check Gage for Minor Diameter
4. Not Go Plain Plug Acceptance Check Gage for Minor Diameter

Downloaded from http://www.everyspec.com

ORDBA Form 20-1577, (OT) 4 May 61

Table I. Tabulation of Design and Identification Data - Unified Standard Thread (Continued)

FIGURE NO.	MARKING ON GAGE HANDLE			*	GAGE DIMENSIONS					
	MIL-STD PART NUMBER	THREAD DESIGNATION	LO PD	1	MAJOR DIA	MINOR DIA	——	TOL ON LEAD	HALF ANGLE TOL	ROOT CLEAR
			LO PD	2	MAJOR DIA FULL PORTION	MAJOR DIA TRUNCATED PORTION	PITCH DIA			
			MINOR DIA	3	——	PLAIN PLUG DIA	——	—	—	CHAM
			MINOR DIA	4	——	PLAIN PLUG DIA	——		—	CHAM
A	B	C	D	*	E	F	G	H	J	K
1	5220-751-5432	(5) .125-40UNC-2A	.1054	1	.1246	.1000 +.0004		.0002	20	.008
2	5220-751-5433	(5) .125-40UNC-2A	.1054	2	.1242 +.0004	.1162 -.0004	.1054 +.0002	.0001	15	.0062
4	5220-751-5434		.1000	3		.10000 -.00004				.015
5	5220-751-5435		.1004	4		.10040 +.00004				.015
1	5220-751-6770	(5) .125-40UNC-3A	.1069	1	.1254	.1015 +.0004		.0002	20	.008
2	5220-751-6771	(5) .125-40UNC-3A	.1069	2	.1250 +.0004	.1177 -.0004	.1069 +.0002	.0001	15	.0062
4	5220-751-6772		.1015	3		.10150 -.00004				.015
5	5220-751-6773		.1019	4		.10190 +.00004				.015
1	5220-751-5440	(5) .125-44UNF-2A	.1070	1	.1244	.1021 +.0004		.0002	20	.007
2	5220-751-5441	(5) .125-44UNF-2A	.1070	2	.1240 +.0004	.1168 -.0004	.1070 +.0002	.0001	15	.0057
4	5220-751-5442		.1021	3		.10210 -.00004				.015
5	5220-751-5443		.1025	4		.10250 +.00004				.015
1	5220-751-5444	(5) .125-44UNF-3A	.1083	1	.1254	.1034 +.0004		.0002	20	.007
2	5220-751-5445	(5) .125-44UNF-3A	.1083	2	.1250 +.0004	.1181 -.0004	.1083 +.0002	.0001	15	.0057
4	5220-751-5446		.1034	3		.10340 -.00004				.015
5	5220-751-5447		.1038	4		.10380 +.00004				.015
1	5220-751-5448	(6) .138-32UNC-2A	.1141	1	.1377	.1073 +.0005		.0003	15	.010
2	5220-751-5449	(6) .138-32UNC-2A	.1141	2	.1372 +.0005	.1276 -.0005	.1141 +.0003	.0001	12	.0078
4	5220-751-5450		.1073	3		.10730 -.00004				.015
5	5220-751-5451		.1078	4		.10780 +.00004				.015
1	5220-751-5452	(6) .138-32UNC-3A	.1156	1	.1385	.1088 +.0005		.0003	15	.010
2	5220-751-5453	(6) .138-32UNC-3A	.1156	2	.1380 +.0005	.1291 -.0005	.1156 +.0003	.0001	12	.0078
4	5220-751-5454		.1088	3		.10880 -.00004				.015
5	5220-751-5455		.1093	4		.10930 +.00004				.015

* 1. LO (Not Go) Thread Ring Gage
2. Truncated Thread Setting Plug Gage
3. Go Plain Plug Acceptance Check Gage for Minor Diameter
4. Not Go Plain Plug Acceptance Check Gage for Minor Diameter

Downloaded from http://www.everyspec.com

ORDBA Form 20-1577, (OT) 4 May 61

Table I. Tabulation of Design and Identification Data - Unified Standard Thread (Continued)

FIGURE NO.	MARKING ON GAGE HANDLE				GAGE DIMENSIONS					
	MIL-STD PART NUMBER	THREAD DESIGNATION	LO PD	1	MAJOR DIA	MINOR DIA	———	TOL ON LEAD	HALF ANGLE TOL	ROOT CLEAR
			LO PD	2	MAJOR DIA FULL PORTION	MAJOR DIA TRUNCATED PORTION	PITCH DIA			
			MINOR DIA	3	———	PLAIN PLUG DIA	———	—	—	CHAM
			MINOR DIA	4	———	PLAIN PLUG DIA	———		—	CHAM
A	B	C	D	*	E	F	G	H	J	K
1	5220-751-5456	(6) .138-40UNF-2A	.1184	1	.1376	.1130 +.0004		.0002	20	.008
2	5220-751-5457	(6) .138-40UNF-2A	.1184	2	.1372 +.0004	.1292 -.0004	.1184 +.0002	.0001	15	.0062
4	5220-751-5458		.1130	3		.11300 -.00004				.015
5	5220-751-5459		.1134	4		.11340 +.00004				.015
1	5220-751-5460	(6) .138-40UNF-3A	.1198	1	.1384	.1144 +.0004		.0002	20	.008
2	5220-751-5461	(6) .138-40UNF-3A	.1198	2	.1380 +.0004	.1306 -.0004	.1198 +.0002	.0001	15	.0062
4	5220-751-5462		.1144	3		.11440 -.00004				.015
5	5220-751-5463		.1148	4		.11480 +.00004				.015
1	5220-751-5464	(8) .164-32UNC-2A	.1399	1	.1636	.1331 +.0005		.0003	15	.010
2	5220-751-5465	(8) .164-32UNC-2A	.1399	2	.1631 +.0005	.1534 -.0005	.1399 +.0003	.0001	12	.0078
4	5220-751-5466		.1331	3		.13310 -.00004				.015
5	5220-751-5467		.1336	4		.13360 +.00004				.015
1	5220-751-5468	(8) .164-32UNC-3A	.1415	1	.1645	.1347 +.0005		.0003	15	.010
2	5220-751-5469	(8) .164-32UNC-3A	.1415	2	.1640 +.0005	.1550 -.0005	.1415 +.0003	.0001	12	.0078
4	5220-751-5470		.1347	3		.13470 -.00004				.015
5	5220-751-5471		.1352	4		.13520 +.00004				.015
1	5220-751-5472	(8) .164-36UNF-2A	.1424	1	.1636	.1364 +.0004		.0002	20	.009
2	5220-751-5473	(8) .164-36UNF-2A	.1424	2	.1632 +.0004	.1544 -.0004	.1424 +.0002	.0001	12	.0069
4	5220-751-5474		.1364	3		.13640 -.00004				.015
5	5220-751-5475		.1368	4		.13680 +.00004				.015
1	5220-751-5476	(8) .164-36UNF-3A	.1439	1	.1644	.1379 +.0004		.0002	20	.009
2	5220-751-5477	(8) .164-36UNF-3A	.1439	2	.1640 +.0004	.1559 -.0004	.1439 +.0002	.0001	12	.0069
4	5220-751-5478		.1379	3		.13790 -.00004				.015
5	5220-751-5479		.1383	4		.13830 +.00004				.015

* 1. LO (Not Go) Thread Ring Gage
2. Truncated Thread Setting Plug Gage
3. Go Plain Plug Acceptance Check Gage for Minor Diameter
4. Not Go Plain Plug Acceptance Check Gage for Minor Diameter

Downloaded from http://www.everyspec.com

ORDBA Form 20-1577, (OT) 4 May 61

Table I. Tabulation of Design and Identification Data - Unified Standard Thread (Continued)

FIGURE NO.	MARKING ON GAGE HANDLE				GAGE DIMENSIONS					
	MIL-STD PART NUMBER	THREAD DESIGNATION	LO PD	1	MAJOR DIA	MINOR DIA	———	TOL ON LEAD	HALF ANGLE TOL	ROOT CLEAR
			LO PD	2	MAJOR DIA FULL PORTION	MAJOR DIA TRUNCATED PORTION	PITCH DIA			
			MINOR DIA	3	———	PLAIN PLUG DIA	———	—	—	CHAM
			MINOR DIA	4	———	PLAIN PLUG DIA	———		—	CHAM
A	B	C	D	*	E	F	G	H	J	K
1	5220-751-5480	(10) .190-24UNC-2A	.1586	1	.1895	.1496 +.0005		.0003	15	.013
2	5220-751-5481	(10) .190-24UNC-2A	.1586	2	.1890 +.0005	.1766 -.0005	.1586 +.0003	.00015	8	.0104
4	5220-751-5482		.1496	3		.14960 -.00004				.015
5	5220-751-5483		.1501	4		.15010 +.00004				.015
1	5220-751-5484	(10) .190-24UNC-3A	.1604	1	.1905	.1514 +.0005		.0003	15	.013
2	5220-751-5485	(10) .190-24UNC-3A	.1604	2	.1900 +.0005	.1784 -.0005	.1604 +.0003	.00015	8	.0104
4	5220-751-5486		.1514	3		.15140 -.00004				.015
5	5220-751-5487		.1519	4		.15190 +.00004				.015
1	5220-751-5488	(10) .190-32UNF-2A	.1658	1	.1896	.1590 +.0005		.0003	15	.010
2	5220-751-5489	(10) .190-32UNF-2A	.1658	2	.1891 +.0005	.1793 -.0005	.1658 +.0003	.0001	12	.0078
4	5220-751-5490		.1590	3		.15900 -.00004				.015
5	5220-751-5491		.1595	4		.15950 +.00004				.015
1	5220-751-5492	(10) .190-32UNF-3A	.1674	1	.1905	.1606 +.0005		.0003	15	.010
2	5220-751-5493	(10) .190-32UNF-3A	.1674	2	.1900 +.0005	.1809 -.0005	.1674 +.0003	.0001	12	.0078
4	5220-751-5494		.1606	3		.16060 -.00004				.015
5	5220-751-5495		.1611	4		.16110 +.00004				.015
1	5220-751-5496	(12) .216-24UNC-2A	.1845	1	.2155	.1755 +.0005		.0003	15	.013
2	5220-751-5497	(12) .216-24UNC-2A	.1845	2	.2150 +.0005	.2025 -.0005	.1845 +.0003	.00015	8	.0104
4	5220-751-5498		.1755	3		.17550 -.00004				.015
5	5220-751-5499		.1760	4		.17600 +.00004				.015
1	5220-751-5500	(12) .216-24UNC-3A	.1863	1	.2165	.1773 +.0005		.0003	15	.013
2	5220-751-5501	(12) .216-24UNC-3A	.1863	2	.2160 +.0005	.2043 -.0005	.1863 +.0003	.00015	8	.0104
4	5220-751-5502		.1773	3		.17730 -.00004				.015
5	5220-751-5503		.1778	4		.17780 +.00004				.015

* 1 LO (Not Go) Thread Ring Gage
2. Truncated Thread Setting Plug Gage
3. Go Plain Plug Acceptance Check Gage for Minor Diameter
4. Not Go Plain Plug Acceptance Check Gage for Minor Diameter

Downloaded from http://www.everyspec.com

ORDBA Form 20-1577, (OT) 4 May 61

Table I. Tabulation of Design and Identification Data - Unified Standard Thread (Continued)

FIGURE NO.	MARKING ON GAGE HANDLE: MIL-STD PART NUMBER	THREAD DESIGNATION	LO PD / LO PD / MINOR DIA / MINOR DIA	*	GAGE DIMENSIONS: MAJOR DIA / MAJOR DIA FULL PORTION / — / —	MINOR DIA / MAJOR DIA TRUNCATED PORTION / PLAIN PLUG DIA / PLAIN PLUG DIA	— / PITCH DIA / — / —	TOL ON LEAD	HALF ANGLE TOL	ROOT CLEAR / CHAM / CHAM
A	B	C	D	*	E	F	G	H	J	K
1	5220-751-5504	(12) .216-28UNF-2A	.1886	1	.2155	.1809 +.0005		.0003	15	.011
2	5220-751-5505	(12) .216-28UNF-2A	.1886	2	.2150 +.0005	.2041 -.0005	.1886 +.0003	.00015	8	.0089
4	5220-751-5506		.1809	3		.18090 -.00004				.015
5	5220-751-5507		.1814	4		.18140 +.00004				.015
1	5220-751-5508	(12) .216-28UNF-3A	.1904	1	.2165	.1827 +.0005		.0003	15	.011
2	5220-751-5509	(12) .216-28UNF-3A	.1904	2	.2160 +.0005	.2059 -.0005	.1904 +.0003	.00015	8	.0089
4	5220-751-5510		.1827	3		.18270 -.00004				.015
5	5220-751-5511		.1832	4		.18320 +.00004				.015
1	5220-751-6966	(12) .216-32UNEF-2A	.1917	1	.2156	.1849 +.0005		.0003	15	.010
2	5220-751-6967	(12) .216-32UNEF-2A	.1917	2	.2151 +.0005	.2052 -.0005	.1917 +.0003	.0001	12	.0078
4	5220-751-6968		.1849	3		.18490 -.00004				.015
5	5220-751-6969		.1854	4		.18540 +.00004				.015
1	5220-751-6970	(12) .216-32UNEF-3A	.1933	1	.2165	.1865 +.0005		.0003	15	.010
2	5220-751-6971	(12) .216-32UNEF-3A	.1933	2	.2160 +.0005	.2068 -.0005	.1933 +.0003	.0001	12	.0078
4	5220-751-6972		.1865	3		.18650 -.00004				.015
5	5220-751-6973		.1870	4		.18700 +.00004				.015
1	5220-751-5512	.2500-20UNC-1A	.2108	1	.2489	.2000 +.0005		.0003	15	.016
2	5220-751-5513	.2500-20UNC-1A	.2108	2	.2483 +.0005	.2325 -.0005	.2108 +.0003	.00015	8	.0125
4	5220-751-5514		.2000	3		.20000 -.00004				.015
5	5220-751-5515		.2005	4		.20050 +.00004				.015
1	5220-751-5516	.2500-20UNC-2A	.2127	1	.2494	.2019 +.0005		.0003	15	.016
2	5220-751-5517	.2500-20UNC-2A	.2127	2	.2489 +.0005	.2344 -.0005	.2127 +.0003	.00015	8	.0125
4	5220-751-5518		.2019	3		.20190 -.00004				.015
5	5220-751-5519		.2024	4		.20240 +.00004				.015

* 1 LO (Not Go) Thread Ring Gage
2. Truncated Thread Setting Plug Gage
3. Go Plain Plug Acceptance Check Gage for Minor Diameter
4. Not Go Plain Plug Acceptance Check Gage for Minor Diameter

Downloaded from http://www.everyspec.com

ORDBA Form 20-1577, (OT) 4 May 61

Table I. Tabulation of Design and Identification Data - Unified Standard Thread (Continued)

FIGURE NO.	MARKING ON GAGE HANDLE: MIL-STD PART NUMBER	THREAD DESIGNATION	LO PD / LO PD / MINOR DIA / MINOR DIA	*	GAGE DIMENSIONS: MAJOR DIA / MAJOR DIA FULL PORTION	MINOR DIA / MAJOR DIA TRUNCATED PORTION / PLAIN PLUG DIA / PLAIN PLUG DIA	PITCH DIA	TOL ON LEAD	HALF ANGLE TOL	ROOT CLEAR
				1	MAJOR DIA	MINOR DIA	———	TOL ON LEAD	HALF ANGLE TOL	ROOT CLEAR
				2	MAJOR DIA FULL PORTION	MAJOR DIA TRUNCATED PORTION	PITCH DIA			
			MINOR DIA	3	———	PLAIN PLUG DIA	———	—	—	CHAM
			MINOR DIA	4	———	PLAIN PLUG DIA	———		—	CHAM
A	B	C	D	*	E	F	G	H	J	K
1	5220-751-5520	.2500-20UNC-3A	.2147	1	.2505	.2039 +.0005		.0003	15	.016
2	5220-751-5521	.2500-20UNC-3A	.2147	2	.2500 +.0005	.2364 -.0005	.2147 +.0003	.00015	8	.0125
4	5220-751-5522		.2039	3		.20390 -.00004				.015
5	5220-751-5523		.2044	4		.20440 +.00004				.015
1	5220-751-5524	.2500-28UNF-1A	.2208	1	.2490	.2131 +.0005		.0003	15	.011
2	5220-751-5525	.2500-28UNF-1A	.2208	2	.2476 +.0005	.2363 -.0005	.2208 +.0003	.00015	8	.0089
4	5220-751-5526		.2131	3		.21310 -.00004				.015
5	5220-751-5527		.2136	4		.21360 +.00004				.015
1	5220-751-5528	.2500-28UNF-2A	.2225	1	.2495	.2148 +.0005		.0003	15	.011
2	5220-751-5529	.2500-28UNF-2A	.2225	2	.2490 +.0005	.2380 -.0005	.2225 +.0003	.00015	8	.0089
4	5220-751-5530		.2148	3		.21480 -.00004				.015
5	5220-751-5531		.2153	4		.21530 +.00004				.015
1	5220-751-5532	.2500-28UNF-3A	.2243	1	.2505	.2166 +.0005		.0003	15	.011
2	5220-751-5533	.2500-28UNF-3A	.2243	2	.2500 +.0005	.2398 -.0005	.2243 +.0003	.00015	8	.0089
4	5220-751-5534		.2166	3		.21660 -.00004				.015
5	5220-751-5535		.2171	4		.21710 +.00004				.015
1	5220-751-5536	.2500-32UNEF-2A	.2255	1	.2494	.2187 +.0005		.0003	15	.010
2	5220-751-5537	.2500-32UNEF-2A	.2255	2	.2489 +.0005	.2390 -.0005	.2255 +.0003	.0001	12	.0078
4	5220-751-5538		.2187	3		.21870 -.00004				.015
5	5220-751-5539		.2192	4		.21920 +.00004				.015
1	5220-751-5540	.2500-32UNEF-3A	.2273	1	.2505	.2205 +.0005		.0003	15	.010
2	5220-751-5541	.2500-32UNEF-3A	.2273	2	.2500 +.0005	.2408 -.0005	.2273 +.0003	.0001	12	.0078
4	5220-751-5542		.2205	3		.22050 -.00004				.015
5	5220-751-5543		.2210	4		.22100 +.00004				.015

* 1 LO (Not Go) Thread Ring Gage
2. Truncated Thread Setting Plug Gage
3. Go Plain Plug Acceptance Check Gage for Minor Diameter
4. Not Go Plain Plug Acceptance Check Gage for Minor Diameter

Downloaded from http://www.everyspec.com

ORDBA Form 20-1577, (OT) 4 May 61

Table I. Tabulation of Design and Identification Data - Unified Standard Thread (Continued)

FIGURE NO.	MARKING ON GAGE HANDLE				GAGE DIMENSIONS					
	MIL-STD PART NUMBER	THREAD DESIGNATION	LO PD	1	MAJOR DIA	MINOR DIA	———	TOL ON LEAD	HALF ANGLE TOL	ROOT CLEAR
			LO PD	2	MAJOR DIA FULL PORTION	MAJOR DIA TRUNCATED PORTION	PITCH DIA			
			MINOR DIA	3	———	PLAIN PLUG DIA	———	—	—	CHAM
			MINOR DIA	4	———	PLAIN PLUG DIA	———		—	CHAM
A	B	C	D	*	E	F	G	H	J	K
1	5220-751-5544	.3125-18UNC-1A-1	.2691	1	.3113	.2571 +.0005		.0003	10	.017
2	5220-751-5545	.3125-18UNC-1A-1	.2691	2	.3108 +.0005	.2932 -.0005	.2691 +.0003	.00015	8	.0139
4	5220-751-2032		.2571	3		.25710 -.00004				.015
5	5220-751-2033		.2576	4		.25760 +.00004				.015
1	5220-751-5548	.3125-18UNC-2A	.2712	1	.3118	.2592 +.0005		.0003	10	.017
2	5220-751-5549	.3125-18UNC-2A	.2712	2	.3113 +.0005	.2953 -.0005	.2712 +.0003	.00015	8	.0139
4	5220-751-5550		.2592	3		.25920 -.00004				.015
5	5220-751-5551		.2597	4		.25970 +.00004				.015
1	5220-751-5552	.3125-18UNC-3A-3	.2734	1	.3130	.2614 +.0005		.0003	10	.017
2	5220-751-5553	.3125-18UNC-3A-3	.2734	2	.3125 +.0005	.2975 -.0005	.2734 +.0003	.00015	8	.0139
4	5220-751-2040		.2614	3		.26140 -.00004				.015
5	5220-751-2041		.2619	4		.26190 +.00004				.015
1	7518122	.3125-20UN-2A	.2748	1	.3118	.2640 +.0005		.0003	15	.016
2	7518123	.3125-20UN-2A	.2748	2	.3113 +.0005	.2965 -.0005	.2748 +.0003	.00015	8	.0125
4	7518124		.2640	3		.26400 -.00004				.015
5	7518125		.2645	4		.26450 +.00004				.015
1	7518126	.3125-20UN-3A	.2770	1	.3130	.2662 +.0005		.0003	15	.016
2	7518127	.3125-20UN-3A	.2770	2	.3125 +.0005	.2987 -.0005	.2770 +.0003	.00015	8	.0125
4	7518128		.2662	3		.26620 -.00004				.015
5	7518129		.2667	4		.26670 +.00004				.015
1	5220-751-5556	.3125-24UNF-1A	.2788	1	.3114	.2698 +.0005		.0003	15	.013
2	5220-751-5557	.3125-24UNF-1A	.2788	2	.3100 +.0005	.2968 -.0005	.2788 +.0003	.00015	8	.0104
4	5220-751-5558		.2698	3		.26980 -.00004				.015
5	5220-751-5559		.2703	4		.27030 +.00004				.015

* 1. LO (Not Go) Thread Ring Gage
2. Truncated Thread Setting Plug Gage
3. Go Plain Plug Acceptance Check Gage for Minor Diameter
4. Not Go Plain Plug Acceptance Check Gage for Minor Diameter

Downloaded from http://www.everyspec.com

ORDBA Form 20-1577, (OT) 4 May 61

Table I. Tabulation of Design and Identification Data - Unified Standard Thread (Continued)

FIGURE NO.	MARKING ON GAGE HANDLE				GAGE DIMENSIONS					
	MIL-STD PART NUMBER	THREAD DESIGNATION	LO PD	1	MAJOR DIA	MINOR DIA	———	TOL ON LEAD	HALF ANGLE TOL	ROOT CLEAR
			LO PD	2	MAJOR DIA FULL PORTION	MAJOR DIA TRUNCATED PORTION	PITCH DIA			
			MINOR DIA	3	———	PLAIN PLUG DIA	———	—	—	CHAM
			MINOR DIA	4	———	PLAIN PLUG DIA	———		—	CHAM
A	B	C	D	*	E	F	G	H	J	K
1	5220-751-5560	.3125-24UNF-2A	.2806	1	.3119	.2716 +.0005		.0003	15	.013
2	5220-751-5561	.3125-24UNF-2A	.2806	2	.3114 +.0005	.2986 -.0005	.2806 +.0003	.00015	8	.0104
4	5220-751-5562		.2716	3		.27160 -.00004				.015
5	5220-751-5563		.2721	4		.27210 +.00004				.015
1	5220-751-5564	.3125-24UNF-3A	.2827	1	.3130	.2737 +.0005		.0003	15	.013
2	5220-751-5565	.3125-24UNF-3A	.2827	2	.3125 +.0005	.3007 -.0005	.2827 +.0003	.00015	8	.0104
4	5220-751-5566		.2737	3		.27370 -.00004				.015
5	5220-751-5567		.2742	4		.27420 +.00004				.015
1	7518130	.3125-28UN-2A	.2849	1	.3120	.2772 +.0005		.0003	15	.011
2	7518131	.3125-28UN-2A	.2849	2	.3115 +.0005	.3004 -.0005	.2849 +.0003	.00015	8	.0089
4	7518132		.2772	3		.27720 -.00004				.015
5	7518133		.2777	4		.27770 +.00004				.015
1	7518134	.3125-28UN-3A	.2867	1	.3130	.2790 +.0005		.0003	15	.011
2	7518135	.3125-28UN-3A	.2867	2	.3125 +.0005	.3022 -.0005	.2867 +.0003	.00015	8	.0089
4	7518136		.2790	3		.27900 -.00004				.015
5	7518137		.2795	4		.27950 +.00004				.015
1	5220-751-5568	.3125-32UNEF-2A	.2880	1	.3119	.2812 +.0005		.0003	15	.010
2	5220-751-5569	.3125-32UNEF-2A	.2880	2	.3114 +.0005	.3015 -.0005	.2880 +.0003	.0001	12	.0078
4	5220-751-5570		.2812	3		.28120 -.00004				.030
5	5220-751-5571		.2817	4		.28170 +.00004				.030
1	5220-751-5572	.3125-32UNEF-3A	.2898	1	.3130	.2830 +.0005		.0003	15	.010
2	5220-751-5573	.3125-32UNEF-3A	.2898	2	.3125 +.0005	.3033 -.0005	.2898 +.0003	.0001	12	.0078
4	5220-751-5574		.2830	3		.28300 -.00004				.030
5	5220-751-5575		.2835	4		.28350 +.00004				.030

* 1 LO (Not Go) Thread Ring Gage
2. Truncated Thread Setting Plug Gage
3. Go Plain Plug Acceptance Check Gage for Minor Diameter
4. Not Go Plain Plug Acceptance Check Gage for Minor Diameter

Downloaded from http://www.everyspec.com

ORDBA Form 20-1577, (OT) 4 May 61

Table I. Tabulation of Design and Identification Data - Unified Standard Thread (Continued)

FIGURE NO.	MARKING ON GAGE HANDLE				GAGE DIMENSIONS					
	MIL-STD PART NUMBER	THREAD DESIGNATION	LO PD	1	MAJOR DIA	MINOR DIA	———	TOL ON LEAD	HALF ANGLE TOL	ROOT CLEAR
			LO PD	2	MAJOR DIA FULL PORTION	MAJOR DIA TRUNCATED PORTION	PITCH DIA			
			MINOR DIA	3	———	PLAIN PLUG DIA	———	—	—	CHAM
			MINOR DIA	4	———	PLAIN PLUG DIA	———		—	CHAM
A	B	C	D	*	E	F	G	H	J	K
1	5220-751-5576	.3750-16UNC-1A	.3266	1	.3741	.3131 +.0006		.0003	10	.020
2	5220-751-5577	.3750-16UNC-1A	.3266	2	.3735 +.0006	.3537 -.0006	.3266 +.0003	.00015	8	.0156
4	5220-751-5578		.3131	3		.31310 -.00004				.030
5	5220-751-5579		.3137	4		.31370 +.00004				.030
1	5220-751-5580	.3750-16UNC-2A	.3287	1	.3743	.3152 +.0006		.0003	10	.020
2	5220-751-5581	.3750-16UNC-2A	.3287	2	.3737 +.0006	.3558 -.0006	.3287 +.0003	.00015	8	.0156
4	5220-751-5582		.3152	3		.31520 -.00004				.030
5	5220-751-5583		.3158	4		.31580 +.00004				.030
1	5220-751-5584	.3750-16UNC-3A	.3311	1	.3756	.3176 +.0006		.0003	10	.020
2	5220-751-5585	.3750-16UNC-3A	.3311	2	.3750 +.0006	.3582 -.0006	.3311 +.0003	.00015	8	.0156
4	5220-751-5586		.3176	3		.31760 -.00004				.030
5	5220-751-5587		.3182	4		.31820 +.00004				.030
1	7518138	.3750-20UN-2A	.3372	1	.3743	.3264 +.0005		.0003	15	.016
2	7518139	.3750-20UN-2A	.3372	2	.3738 +.0005	.3589 -.0005	.3372 +.0003	.00015	8	.0125
4	7518140		.3264	3		.32640 -.00004				.030
5	7518141		.3269	4		.32690 +.00004				.030
1	7518142	.3750-20UN-3A	.3394	1	.3755	.3286 +.0005		.0003	15	.016
2	7518143	.3750-20UN-3A	.3394	2	.3750 +.0005	.3611 -.0005	.3394 +.0003	.00015	8	.0125
4	7518144		.3286	3		.32860 -.00004				.030
5	7518145		.3291	4		.32910 +.00004				.030
1	5220-751-5588	.3750-24UNF-1A	.3411	1	.3739	.3321 +.0005		.0003	15	.013
2	5220-751-5589	.3750-24UNF-1A	.3411	2	.3724 +.0005	.3591 -.0005	.3411 +.0003	.00015	8	.0104
4	5220-751-5590		.3321	3		.33210 -.00004				.030
5	5220-751-5591		.3326	4		.33260 +.00004				.030

* 1. LO (Not Go) Thread Ring Gage
2. Truncated Thread Setting Plug Gage
3. Go Plain Plug Acceptance Check Gage for Minor Diameter
4. Not Go Plain Plug Acceptance Check Gage for Minor Diameter

Downloaded from http://www.everyspec.com

ORDBA Form 20-1577, (OT) 4 May 61

Table I. Tabulation of Design and Identification Data - Unified Standard Thread (Continued)

FIGURE NO.	MARKING ON GAGE HANDLE				GAGE DIMENSIONS					
	MIL-STD PART NUMBER	THREAD DESIGNATION	LO PD	1	MAJOR DIA	MINOR DIA	——	TOL ON LEAD	HALF ANGLE TOL	ROOT CLEAR
			LO PD	2	MAJOR DIA FULL PORTION	MAJOR DIA TRUNCATED PORTION	PITCH DIA			
			MINOR DIA	3	——	PLAIN PLUG DIA	——	—	—	CHAM
			MINOR DIA	4	——	PLAIN PLUG DIA	——		—	CHAM
A	B	C	D	*	E	F	G	H	J	K
1	5220-751-5592	.3750-24UNF-2A	.3430	1	.3744	.3340 +.0005		.0003	15	.013
2	5220-751-5593	.3750-24UNF-2A	.3430	2	.3739 +.0005	.3610 -.0005	.3430 +.0003	.00015	8	.0104
4	5220-751-5594		.3340	3		.33400 -.00004				.030
5	5220-751-5595		.3345	4		.33450 +.00004				.030
1	5220-751-5596	.3750-24UNF-3A	.3450	1	.3755	.3360 +.0005		.0003	15	.013
2	5220-751-5597	.3750-24UNF-3A	.3450	2	.3750 +.0005	.3630 -.0005	.3450 +.0003	.00015	8	.0104
4	5220-751-5598		.3360	3		.33600 -.00004				.030
5	5220-751-5599		.3365	4		.33650 +.00004				.030
1	7518146	.3750-28UN-2A	.3471	1	.3744	.3394 +.0005		.0003	15	.011
2	7518147	.3750-28UN-2A	.3471	2	.3739 +.0005	.3626 -.0005	.3471 +.0003	.00015	8	.0089
4	7518148		.3394	3		.33940 -.00004				.030
5	7518149		.3399	4		.33990 +.00004				.030
1	7518150	.3750-28UN-3A	.3491	1	.3755	.3414 +.0005		.0003	15	.011
2	7518151	.3750-28UN-3A	.3491	2	.3750 +.0005	.3646 -.0005	.3491 +.0003	.00015	8	.0089
4	7518152		.3414	3		.34140 -.00004				.030
5	7518153		.3419	4		.34190 +.00004				.030
1	5220-751-5600	.3750-32UNEF-2A	.3503	1	.3742	.3435 +.0005		.0003	15	.010
2	5220-751-5601	.3750-32UNEF-2A	.3503	2	.3737 +.0005	.3638 -.0005	.3503 +.0003	.0001	12	.0078
4	5220-751-5602		.3435	3		.34350 -.00004				.030
5	5220-751-5603		.3440	4		.34400 +.00004				.030
1	5220-751-5604	.3750-32UNEF-3A	.3522	1	.3755	.3454 +.0005		.0003	15	.010
2	5220-751-5605	.3750-32UNEF-3A	.3522	2	.3750 +.0005	.3657 -.0005	.3522 +.0003	.0001	12	.0078
4	5220-751-5606		.3454	3		.34540 -.00004				.030
5	5220-751-5607		.3459	4		.34590 +.00004				.030

* 1. LO (Not Go) Thread Ring Gage
2. Truncated Thread Setting Plug Gage
3. Go Plain Plug Acceptance Check Gage for Minor Diameter
4. Not Go Plain Plug Acceptance Check Gage for Minor Diameter

Downloaded from http://www.everyspec.com

ORDBA Form 20-1577, (OT) 4 May 61

Table I. Tabulation of Design and Identification Data - Unified Standard Thread (Continued)

FIGURE NO.	MARKING ON GAGE HANDLE				GAGE DIMENSIONS					
	MIL-STD PART NUMBER	THREAD DESIGNATION	LO PD	1	MAJOR DIA	MINOR DIA	———	TOL ON LEAD	HALF ANGLE TOL	ROOT CLEAR
			LO PD	2	MAJOR DIA FULL PORTION	MAJOR DIA TRUNCATED PORTION	PITCH DIA			
			MINOR DIA	3	———	PLAIN PLUG DIA	———	—	—	CHAM
			MINOR DIA	4	———	PLAIN PLUG DIA	———		—	CHAM
A	B	C	D	*	E	F	G	H	J	K
1	5220-751-5608	.4375-14UNC-1A	.3826	1	.4367	.3671 +.0006		.0003	10	.022
2	5220-751-5609	.4375-14UNC-1A	.3826	2	.4361 +.0006	.4135 -.0006	.3826 +.0003	.0002	6	.0179
4	5220-751-5610		.3671	3		.36710 -.00004				.030
5	5220-751-5611		.3677	4		.36770 +.00004				.030
1	5220-751-5612	.4375-14UNC-2A	.3850	1	.4367	.3695 +.0006		.0003	10	.022
2	5220-751-5613	.4375-14UNC-2A	.3850	2	.4361 +.0006	.4159 -.0006	.3850 +.0003	.0002	6	.0179
4	5220-751-5614		.3695	3		.36950 -.00004				.030
5	5220-751-5615		.3701	4		.37010 +.00004				.030
1	5220-751-5616	.4375-14UNC-3A	.3876	1	.4381	.3721 +.0006		.0003	10	.022
2	5220-751-5617	.4375-14UNC-3A	.3876	2	.4375 +.0006	.4185 -.0006	.3876 +.0003	.0002	6	.0179
4	5220-751-5618		.3721	3		.37210 -.00004				.030
5	5220-751-5619		.3727	4		.37270 +.00004				.030
1	7518154	.4375-16UN-2A	.3909	1	.4367	.3774 +.0006		.0003	10	.020
2	7518155	.4375-16UN-2A	.3909	2	.4361 +.0006	.4180 -.0006	.3909 +.0003	.00015	8	.0156
1	7518156	.4375-16UN-3A	.3935	1	.4381	.3800 +.0006		.0003	10	.020
2	7518157	.4375-16UN-3A	.3935	2	.4375 +.0006	.4206 -.0006	.3935 +.0003	.00015	8	.0156
1	5220-751-5620	.4375-20UNF-1A	.3975	1	.4362	.3867 +.0005		.0003	15	.016
2	5220-751-5621	.4375-20UNF-1A	.3975	2	.4350 +.0005	.4192 -.0005	.3975 +.0003	.00015	8	.0125
1	5220-751-5622	.4375-20UNF-2A	.3995	1	.4367	.3887 +.0005		.0003	15	.016
2	5220-751-5623	.4375-20UNF-2A	.3995	2	.4362 +.0005	.4212 -.0005	.3995 +.0003	.00015	8	.0125
1	5220-751-5624	.4375-20UNF-3A	.4019	1	.4380	.3911 +.0005		.0003	15	.016
2	5220-751-5625	.4375-20UNF-3A	.4019	2	.4375 +.0005	.4236 -.0005	.4019 +.0003	.00015	8	.0125

* 1. LO (Not Go) Thread Ring Gage
2. Truncated Thread Setting Plug Gage
3. Go Plain Plug Acceptance Check Gage for Minor Diameter
4. Not Go Plain Plug Acceptance Check Gage for Minor Diameter

Downloaded from http://www.everyspec.com

Table I. Tabulation of Design and Identification Data - Unified Standard Thread (Continued)

FIG. NO.	MARKING ON GAGE HANDLE				GAGE DIMENSIONS					
	MIL-STD PART NUMBER	THREAD DESIGNATION	LO PD	1	MAJOR DIA	MINOR DIA		TOL ON LEAD	HALF ANGLE TOL	ROOT CLEAR
			LO PD	2	MAJOR DIA FULL PORTION	MAJOR DIA TRUNCATED PORTION	PITCH DIA			
A	B	C	D	*	E	F	G	H	J	K
1	5220-751-5626	.4375-28UNEF-2A	.4096	1	.4369	.4019 +.0005		.0003	15	.011
2	5220-751-5627	.4375-28UNEF-2A	.4096	2	.4364 +.0005	.4251 -.0005	.4096 +.0003	.00015	8	.0089
1	5220-751-5628	.4375-28UNEF-3A	.4116	1	.4380	.4039 +.0005		.0003	15	.011
2	5220-751-5629	.4375-28UNEF-3A	.4116	2	.4375 +.0005	.4271 -.0005	.4116 +.0003	.00015	8	.0089
1	7518158	.4375-32UN-2A	.4128	1	.4367	.4060 +.0005		.0003	15	.010
2	7518159	.4375-32UN-2A	.4128	2	.4362 +.0005	.4263 -.0005	.4128 +.0003	.0001	12	.0078
1	7518160	.4375-32UN-3A	.4147	1	.4380	.4079 +.0005		.0003	15	.010
2	7518161	.4375-32UN-3A	.4147	2	.4375 +.0005	.4282 -.0005	.4147 +.0003	.0001	12	.0078
1	5220-751-5630	.5000-13UNC-1A	.4411	1	.4991	.4245 +.0006		.0003	10	.024
2	5220-751-5631	.5000-13UNC-1A	.4411	2	.4985 +.0006	.4744 -.0006	.4411 +.0003	.00025	6	.0192
1	5220-751-5632	.5000-13UNC-2A	.4435	1	.4991	.4269 +.0006		.0003	10	.024
2	5220-751-5633	.5000-13UNC-2A	.4435	2	.4985 +.0006	.4768 -.0006	.4435 +.0003	.0002	6	.0192
1	5220-751-5634	.5000-13UNC-3A-3	.4463	1	.5006	.4297 +.0006		.0003	10	.024
2	5220-751-5635	.5000-13UNC-3A-3	.4463	2	.5000 +.0006	.4796 -.0006	.4463 +.0003	.0002	6	.0192
1	7518162	.5000-16UN-2A	.4533	1	.4992	.4398 +.0006		.0003	10	.020
2	7518163	.5000-16UN-2A	.4533	2	.4986 +.0006	.4804 -.0006	.4533 +.0003	.00015	8	.0156
1	7518164	.5000-16UN-3A	.4559	1	.5006	.4424 +.0006		.0003	10	.020
2	7518165	.5000-16UN-3A	.4559	2	.5000 +.0006	.4830 -.0006	.4559 +.0003	.00015	8	.0156
1	5220-751-5636	.5000-20UNF-1A	.4598	1	.4987	.4490 +.0005		.0003	15	.016
2	5220-751-5637	.5000-20UNF-1A	.4598	2	.4973 +.0005	.4815 -.0005	.4598 +.0003	.00015	8	.0125
1	5220-751-5638	.5000-20UNF-2A	.4619	1	.4992	.4511 +.0005		.0003	15	.016
2	5220-751-5639	.5000-20UNF-2A	.4619	2	.4987 +.0005	.4836 -.0005	.4619 +.0003	.00015	8	.0125

* 1. LO (Not Go) Thread Ring Gage 2. Truncated Thread Setting Plug Gage

OEDBA Form 20-1578, (OT) 4 May 61

Downloaded from http://www.everyspec.com

Table I. Tabulation of Design and Identification Data - Unified Standard Thread (Continued)

FIG. NO.	MARKING ON GAGE HANDLE				GAGE DIMENSIONS					
	MIL-STD PART NUMBER	THREAD DESIGNATION	LO PD	1	MAJOR DIA	MINOR DIA		TOL. ON LEAD	HALF ANGLE TOL	ROOT CLEAR
			LO PD	2	MAJOR DIA FULL PORTION	MAJOR DIA TRUNCATED PORTION	PITCH DIA			
A	B	C	D	*	E	F	G	H	J	K
1	5220-751-5640	.5000-20UNF-3A	.4643	1	.5005	.4535 + .0005		.0003	15	.016
2	5220-751-5641	.5000-20UNF-3A	.4643	2	.5000 +.0005	.4860 - .0005	4643 +.0003	.00015	8	.0125
1	5220-751-5642	.5000-28UNEF-2A	.4720	1	.4993	.4643 + .0005		.0003	15	.011
2	5220-751-5643	.5000-28UNEF-2A	.4720	2	.4988 +.0005	.4875 - .0005	.4720 +.0003	.00015	8	.0089
1	5220-751-5644	.5000-28UNEF-3A	.4740	1	.5005	.4663 + .0005		.0003	15	.011
2	5220-751-5645	.5000-28UNEF-3A	.4740	2	.5000 +.0005	.4895 - .0005	.4740 +.0003	.00015	8	.0089
1	7518166	.5000-32UN-2A	.4752	1	.4991	.4684 + .0005		.0003	15	.010
2	7518167	.5000-32UN-2A	.4752	2	.4986 +.0005	.4887 - .0005	.4752 +.0003	.0001	12	.0078
1	7518168	.5000-32UN-3A	.4771	1	.5005	.4703 + .0005		.0003	15	.010
2	7518169	.5000-32UN-3A	.4771	2	.5000 +.0005	.4906 - .0005	.4771 +.0003	.0001	12	.0078
1	5220-751-5646	.5625-12UNC-1A	.4990	1	.5615	.4810 + .0006		.0003	10	.026
2	5220-751-5647	.5625-12UNC-1A	.4990	2	.5609 +.0006	.5351 - .0006	.4990 +.0003	.0002	6	.0208
1	5220-751-5648	.5625-12UNC-2A	.5016	1	.5615	.4836 + .0006		.0003	10	.026
2	5220-751-5649	.5625-12UNC-2A	.5016	2	.5609 +.0006	.5377 - .0006	.5016 +.0003	.0002	6	.0208
1	5220-751-5650	.5625-12UNC-3A	.5045	1	.5631	.4865 + .0006		.0003	10	.026
2	5220-751-5651	.5625-12UNC-3A	.5045	2	.5625 +.0006	.5406 - .0006	.5045 +.0003	.0002	6	.0208
1	7518170	.5625-16UN-2A	.5158	1	.5617	.5023 + .0006		.0003	10	.020
2	7518171	.5625-16UN-2A	.5158	2	.5611 +.0006	.5429 - .0006	.5158 +.0003	.00015	8	.0156
1	7518172	.5625-16UN-3A	.5184	1	.5631	.5049 + .0006		.0003	10	.020
2	7518173	.5625-16UN-3A	.5184	2	.5625 +.0006	.5455 - .0006	.5184 +.0003	.00015	8	.0156
1	5220-751-5652	.5625-18UNF-1A	.5182	1	.5611	.5062 + .0005		.0003	10	.017
2	5220-751-5653	.5625-18UNF-1A	.5182	2	.5599 +.0005	.5423 - .0005	.5182 +.0003	.00015	8	.0139

* 1. LO (Not Go) Thread Ring Gage 2. Truncated Thread Setting Plug Gage

ORDBA Form 20-1578, (OT) 4 May 61

Downloaded from http://www.everyspec.com

Table I. Tabulation of Design and Identification Data - Unified Standard Thread (Continued)

FIG. NO.	MARKING ON GAGE HANDLE				GAGE DIMENSIONS					
	MIL-STD PART NUMBER	THREAD DESIGNATION	LO PD / LO PD	1 / 2	MAJOR DIA / MAJOR DIA FULL PORTION	MINOR DIA / MAJOR DIA TRUNCATED PORTION	PITCH DIA	TOL ON LEAD	HALF ANGLE TOL	ROOT CLEAR
A	B	C	D	*	E	F	G	H	J	K
1	5220-751-5654	.5625-18UNF-2A	.5205	1	.5616	.5085 + .0005		.0003	10	.017
2	5220-751-5655	.5625-18UNF-2A	.5205	2	.5611 +.0005	.5446 - .0005	.5205 +.0003	.00015	8	.0139
1	5220-751-5656	.5625-18UNF-3A	.5230	1	.5630	.5110 + .0005		.0003	10	.017
2	5220-751-5657	.5625-18UNF-3A	.5230	2	.5625 +.0005	.5471 - .0005	.5230 +.0003	.00015	8	.0139
1	7518174	.5625-20UN-2A	.5245	1	.5617	.5137 + .0005		.0003	15	.016
2	7518175	.5625-20UN-2A	.5245	2	.5612 +.0005	.5462 - .0005	.5245 +.0003	.00015	8	.0125
1	7518176	.5625-20UN-3A	.5268	1	.5630	.5160 + .0005		.0003	15	.016
2	7518177	.5625-20UN-3A	.5268	2	.5625 +.0005	.5485 - .0005	.5268 +.0003	.00015	8	.0125
1	5220-751-5658	.5625-24UNEF-2A	.5303	1	.5618	.5213 + .0005		.0003	15	.013
2	5220-751-5659	.5625-24UNEF-2A	.5303	2	.5613 +.0005	.5483 - .0005	.5303 +.0003	.00015	8	.0104
1	5220-751-5660	.5625-24UNEF-3A	.5325	1	.5630	.5235 + .0005		.0003	15	.013
2	5220-751-5661	.5625-24UNEF-3A	.5325	2	.5625 +.0005	.5505 - .0005	.5325 +.0003	.00015	8	.0104
1	7518178	.5625-28UN-2A	.5345	1	.5618	.5268 + .0005		.0003	15	.011
2	7518179	.5625-28UN-2A	.5345	2	.5613 +.0005	.5500 - .0005	.5345 +.0003	.00015	8	.0089
1	7518180	.5625-28UN-3A	.5365	1	.5630	.5288 + .0005		.0003	15	.011
2	7518181	.5625-28UN-3A	.5365	2	.5625 +.0005	.5520 - .0005	.5365 +.0003	.00015	8	.0089
1	7518182	.5625-32UN-2A	.5377	1	.5616	.5309 + .0005		.0003	15	.010
2	7518183	.5625-32UN-2A	.5377	2	.5611 +.0005	.5512 - .0005	.5377 +.0003	.00015	12	.0078
1	7518184	.5625-32UN-3A	.5396	1	.5630	.5328 + .0005		.0003	15	.010
2	7518185	.5625-32UN-3A	.5396	2	.5625 +.0005	.5531 - .0005	.5396 +.0003	.00015	12	.0078
1	5220-751-5662	.6250-11UNC-1A	.5561	1	.6240	.5364 + .0006		.0003	10	.028
2	5220-751-5663	.6250-11UNC-1A	.5561	2	.6234 +.0006	.5955 - .0006	.5561 +.0003	.0002	6	.0217

* 1. LO (Not Go) Thread Ring Gage 2. Truncated Thread Setting Plug Gage

ORDBA Form 20-1578, (OT) 4 May 61

Downloaded from http://www.everyspec.com

Table I. Tabulation of Design and Identification Data - Unified Standard Thread (Continued)

FIG. NO.	MARKING ON GAGE HANDLE				GAGE DIMENSIONS					
	MIL-STD PART NUMBER	THREAD DESIGNATION	LO PD	1	MAJOR DIA	MINOR DIA		TOL ON LEAD	HALF ANGLE TOL	ROOT CLEAR
			LO PD	2	MAJOR DIA FULL PORTION	MAJOR DIA TRUNCATED PORTION	PITCH DIA			
A	B	C	D	*	E	F	G	H	J	K
1	5220-751-5664	.6250-11UNC-2A	.5589	1	.6240	.5392 + .0006		.0003	10	.028
2	5220-751-5665	.6250-11UNC-2A	.5589	2	.6234 +.0006	.5983 - .0006	.5589 +.0003	.0002	6	.0217
1	5220-751-5666	.6250-11UNC-3A	.5619	1	.6256	.5422 + .0006		.0003	10	.028
2	5220-751-5667	.6250-11UNC-3A	.5619	2	.6250 +.0006	.6013 - .0006	.5619 +.0003	.0002	6	.0217
1	5220-751-6976	.6250-12UN-2A	.5639	1	.6240	.5459 + .0006		.0003	10	.026
2	5220-751-6977	.6250-12UN-2A	.5639	2	.6234 +.0006	.6000 - .0006	.5639 +.0003	.0002	6	.0208
1	5220-751-6978	.6250-12UN-3A	.5668	1	.6256	.5488 + .0006		.0003	10	.026
2	5220-751-6979	.6250-12UN-3A	.5668	2	.6250 +.0006	.6029 - .0006	.5668 +.0003	.0002	6	.0208
1	7518186	.6250-16UN-2A	.5782	1	.6242	.5647 + .0006		.0003	10	.020
2	7518187	.6250-16UN-2A	.5782	2	.6236 +.0006	.6053 - .0006	.5782 +.0003	.00015	8	.0156
1	7518188	.6250-16UN-3A	.5808	1	.6256	.5673 + .0006		.0003	10	.020
2	7518189	.6250-16UN-3A	.5808	2	.6250 +.0006	.6079 - .0006	.5808 +.0003	.00015	8	.0156
1	5220-751-5668	.6250-18UNF-1A	.5805	1	.6236	.5685 + .0005		.0003	10	.017
2	5220-751-5669	.6250-18UNF-1A	.5805	2	.6222 +.0005	.6046 - .0005	.5805 +.0003	.00015	8	.0139
1	5220-751-5670	.6250-18UNF-2A	.5828	1	.6241	.5708 + .0005		.0003	10	.017
2	5220-751-5671	.6250-18UNF-2A	.5828	2	.6236 +.0005	.6069 - .0005	.5828 +.0003	.00015	8	.0139
1	5220-751-5672	.6250-18UNF-3A	.5854	1	.6255	.5734 + .0005		.0003	10	.017
2	5220-751-5673	.6250-18UNF-3A	.5854	2	.6250 +.0005	.6095 - .0005	.5854 +.0003	.00015	8	.0139
1	7518190	.6250-20UN-2A	.5869	1	.6242	.5761 + .0005		.0003	15	.016
2	7518191	.6250-20UN-2A	.5869	2	.6237 +.0005	.6086 - .0005	.5869 +.0003	.00015	8	.0125
1	7518192	.6250-20UN-3A	.5893	1	.6255	.5785 + .0005		.0003	15	.016
2	7518193	.6250-20UN-3A	.5893	2	.6250 +.0005	.6110 - .0005	.5893 +.0003	.00015	8	.0125

* 1. LO (Not Go) Thread Ring Gage 2. Truncated Thread Setting Plug Gage

ORDBA Form 20-1578, (OT) 4 May 61

Downloaded from http://www.everyspec.com

Table I. Tabulation of Design and Identification Data - Unified Standard Thread (Continued)

FIG. NO.	MARKING ON GAGE HANDLE				GAGE DIMENSIONS					
	MIL-STD PART NUMBER	THREAD DESIGNATION	LO PD	1	MAJOR DIA	MINOR DIA	———	TOL ON LEAD	HALF ANGLE TOL	ROOT CLEAR
			LO PD	2	MAJOR DIA FULL PORTION	MAJOR DIA TRUNCATED PORTION	PITCH DIA			
A	B	C	D	*	E	F	G	H	J	K
1	5220-751-5674	.6250-24UNEF-2A	.5927	1	.6243	.5837 + .0005		.0003	15	.013
2	5220-751-5675	.6250-24UNEF-2A	.5927	2	.6238 +.0005	.6107 - .0005	.5927 +.0003	.00015	8	.0104
1	5220-751-5676	.6250-24UNEF-3A	.5949	1	.6255	.5859 + .0005		.0003	15	.013
2	5220-751-5677	.6250-24UNEF-3A	.5949	2	.6250 +.0005	.6129 - .0005	.5949 +.0003	.00015	8	.0104
1	7518194	.6250-28UN-2A	.5969	1	.6242	.5892 + .0005		.0003	15	.011
2	7518195	.6250-28UN-2A	.5969	2	.6237 +.0005	.6124 - .0005	.5969 +.0003	.00015	8	.0089
1	7518196	.6250-28UN-3A	.5990	1	.6255	.5913 + .0005		.0003	15	.011
2	7518197	.6250-28UN-3A	.5990	2	.6250 +.0005	.6145 - .0005	.5990 +.0003	.00015	8	.0089
1	7518198	.6250-32UN-2A	.6000	1	.6239	.5932 + .0005		.0003	15	.010
2	7518199	.6250-32UN-2A	.6000	2	.6234 +.0005	.6135 - .0005	.6000 +.0003	.00015	12	.0078
1	7518200	.6250-32UN-3A	.6020	1	.6255	.5952 + .0005		.0003	15	.010
2	7518201	.6250-32UN-3A	.6020	2	.6250 +.0005	.6155 - .0005	.6020 +.0003	.00015	12	.0078
1	5220-751-6980	.6875-12UN-2A	.6264	1	.6865	.6084 + .0006		.0003	10	.025
2	5220-751-6981	.6875-12UN-2A	.6264	2	.6859 +.0006	.6625 - .0006	.6264 +.0003	.0002	6	.0208
1	5220-751-6982	.6875-12UN-3A	.6293	1	.6881	.6113 + .0006		.0003	10	.026
2	5220-751-6983	.6875-12UN-3A	.6293	2	.6875 +.0006	.6654 - .0006	.6293 +.0003	.0002	6	.0208
1	7518202	.6875-16UN-2A	.6407	1	.6867	.6272 + .0006		.0003	10	.020
2	7518203	.6875-16UN-2A	.6407	2	.6861 +.0006	.6678 - .0006	.6407 +.0003	.00015	8	.0156
1	7518204	.6875-16UN-3A	.6433	1	.6881	.6298 + .0006		.0003	10	.020
2	7518205	.6875-16UN-3A	.6433	2	.6875 +.0006	.6704 - .0006	.6433 +.0003	.00015	8	.0156
1	7518206	.6875-20UN-2A	.6494	1	.6867	.6386 + .0005		.0003	15	.016
2	7518207	.6875-20UN-2A	.6494	2	.6862 +.0005	.6711 - .0005	.6494 +.0003	.00015	8	.0125

* 1. LO (Not Go) Thread Ring Gage 2. Truncated Thread Setting Plug Gage

ORDBA Form 20-1578, (OT) 4 May 61

Downloaded from http://www.everyspec.com

Table I. Tabulation of Design and Identification Data - Unified Standard Thread (Continued)

FIG. NO.	MARKING ON GAGE HANDLE				GAGE DIMENSIONS					
	MIL-STD PART NUMBER	THREAD DESIGNATION	LO PD / LO PD	1 / 2	MAJOR DIA / MAJOR DIA FULL PORTION	MINOR DIA / MAJOR DIA TRUNCATED PORTION	PITCH DIA	TOL ON LEAD	HALF ANGLE TOL	ROOT CLEAR
A	B	C	D	*	E	F	G	H	J	K
1	7518208	.6875-20UN-3A	.6518	1	.6881	.6410 + .0005		.0003	15	.016
2	7518209	.6875-20UN-3A	.6518	2	.6875 +.0005	.6735 - .0005	.6518 +.0003	.00015	8	.0125
1	5220-751-5678	.6875-24UNEF-2A	.6552	1	.6868	.6462 + .0005		.0003	15	.013
2	5220-751-5679	.6875-24UNEF-2A	.6552	2	.6863 +.0005	.6732 - .0005	.6552 +.0003	.00015	8	.0104
1	5220-751-5680	.6875-24UNEF-3A	.6574	1	.6880	.6484 + .0005		.0003	15	.013
2	5220-751-5681	.6875-24UNEF-3A	.6574	2	.6875 +.0005	.6754 - .0005	.6574 +.0003	.00015	8	.0104
1	7518210	.6875-28UN-2A	.6594	1	.6867	.6517 + .0005		.0003	15	.011
2	7518211	.6875-28UN-2A	.6594	2	.6862 +.0005	.6749 - .0005	.6594 +.0003	.00015	8	.0089
1	7518212	.6875-28UN-3A	.6615	1	.6881	.6538 + .0005		.0003	15	.011
2	7518213	.6875-28UN-3A	.6615	2	.6875 +.0005	.6770 - .0005	.6615 +.0003	.00015	8	.0089
1	7518214	.6875-32UN-2A	.6625	1	.6864	.6557 + .0005		.0003	15	.010
2	7518215	.6875-32UN-2A	.6625	2	.6859 +.0005	.6760 - .0005	.6625 +.0003	.00015	12	.0078
1	7518216	.6875-32UN-3A	.6645	1	.6881	.6577 + .0005		.0003	15	.010
2	7518217	.6875-32UN-3A	.6645	2	.6875 +.0005	.6780 - .0005	.6645 +.0003	.00015	12	.0078
1	5220-751-5682	.7500-10UNC-1A	.6744	1	.7488	.6528 + .0006		.0003	10	.031
2	5220-751-5683	.7500-10UNC-1A	.6744	2	.7482 +.0006	.7177 - .0006	.6744 +.0003	.00025	6	.0250
1	5220-751-5684	.7500-10UNC-2A	.6773	1	.7488	.6557 + .0006		.0003	10	.031
2	5220-751-5685	.7500-10UNC-2A	.6773	2	.7482 +.0006	.7206 - .0006	.6773 +.0003	.00025	6	.0250
1	5220-751-5686	.7500-10UNC-3A	.6806	1	.7506	.6590 + .0006		.0003	10	.031
2	5220-751-5687	.7500-10UNC-3A	.6806	2	.7500 +.0006	.7239 - .0006	.6806 +.0003	.00025	6	.0250
1	5220-751-6984	.7500-12UN-2A	.6887	1	.7489	.6707 + .0006		.0003	10	.026
2	5220-751-6985	.7500-12UN-2A	.6887	2	.7483 +.0006	.7248 - .0006	.6887 +.0003	.0002	6	.0208

* 1. LO (Not Go) Thread Ring Gage 2. Truncated Thread Setting Plug Gage

ORDBA Form 20-1578, (OT) 4 May 61

Downloaded from http://www.everyspec.com

Table I. Tabulation of Design and Identification Data - Unified Standard Thread (Continued)

FIG. NO.	MARKING ON GAGE HANDLE				GAGE DIMENSIONS					
	MIL-STD PART NUMBER	THREAD DESIGNATION	LO PD / LO PD	1 / 2	MAJOR DIA / MAJOR DIA FULL PORTION	MINOR DIA / MAJOR DIA TRUNCATED PORTION	PITCH DIA	TOL ON LEAD	HALF ANGLE TOL	ROOT CLEAR
A	B	C	D	*	E	F	G	H	J	K
1	5220-751-6986	.7500-12UN-3A	.6918	1	.7506	.6738 +.0006		.0003	10	.026
2	5220-751-6987	.7500-12UN-3A	.6918	2	.7500 +.0006	.7279 -.0006	.6918 +.0003	.0002	6	.0208
1	5220-751-5688	.7500-16UNF-1A	.7004	1	.7485	.6869 +.0006		.0003	10	.020
2	5220-751-5689	.7500-16UNF-1A	.7004	2	.7473 +.0006	.7275 -.0006	.7004 +.0003	.00015	8	.0156
1	5220-751-5690	.7500-16UNF-2A	.7029	1	.7491	.6894 +.0006		.0003	10	.020
2	5220-751-5691	.7500-16UNF-2A	.7029	2	.7485 +.0006	.7300 -.0006	.7029 +.0003	.00015	8	.0156
1	5220-751-5692	.7500-16UNF-3A	.7056	1	.7506	.6921 +.0006		.0003	10	.020
2	5220-751-5693	.7500-16UNF-3A	.7056	2	.7500 +.0006	.7327 -.0006	.7056 +.0003	.00015	8	.0156
1	5220-751-5694	.7500-20UNEF-2A	.7118	1	.7492	.7010 +.0005		.0003	15	.016
2	5220-751-5695	.7500-20UNEF-2A	.7118	2	.7487 +.0005	.7335 -.0005	.7118 +.0003	.00015	8	.0125
1	5220-751-5696	.7500-20UNEF-3A	.7142	1	.7505	.7034 +.0005		.0003	15	.016
2	5220-751-5697	.7500-20UNEF-3A	.7142	2	.7500 +.0005	.7359 -.0005	.7142 +.0003	.00015	8	.0125
1	7518218	.7500-28UN-2A	.7218	1	.7491	.7141 +.0005		.0003	15	.011
2	7518219	.7500-28UN-2A	.7218	2	.7486 +.0005	.7373 -.0005	.7218 +.0003	.00015	8	.0089
1	7518220	.7500-28UN-3A	.7239	1	.7505	.7162 +.0005		.0003	15	.011
2	7518221	.7500-28UN-3A	.7239	2	.7500 +.0005	.7394 -.0005	.7239 +.0003	.00015	8	.0089
1	7518222	.7500-32UN-2A	.7250	1	.7489	.7182 +.0005		.0003	15	.010
2	7518223	.7500-32UN-2A	.7250	2	.7484 +.0005	.7385 -.0005	.7250 +.0003	.00015	12	.0078
1	7518224	.7500-32UN-3A	.7270	1	.7505	.7202 +.0005		.0003	15	.010
2	7518225	.7500-32UN-3A	.7270	2	.7500 +.0005	.7405 -.0005	.7270 +.0003	.00015	12	.0078
1	5220-751-6988	.8125-12UN-2A	.7512	1	.8114	.7332 +.0006		.0003	10	.026
2	5220-751-6989	.8125-12UN-2A	.7512	2	.8108 +.0006	.7873 -.0006	.7512 +.0003	.0002	6	.0208

* 1. LO (Not Go) Thread Ring Gage 2. Truncated Thread Setting Plug Gage

ORDBA Form 20-1578, (OT) 4 May 61

Downloaded from http://www.everyspec.com

Table I. Tabulation of Design and Identification Data - Unified Standard Thread (Continued)

FIG. NO.	MARKING ON GAGE HANDLE				GAGE DIMENSIONS					
	MIL-STD PART NUMBER	THREAD DESIGNATION	LO PD / LO PD	1 / 2	MAJOR DIA / MAJOR DIA FULL PORTION	MINOR DIA / MAJOR DIA TRUNCATED PORTION	PITCH DIA	TOL ON LEAD	HALF ANGLE TOL	ROOT CLEAR
A	B	C	D	*	E	F	G	H	J	K
1	5220-751-6990	.8125-12UN-3A	.7543	1	.8131	.7363 + .0006		.0003	10	.026
2	5220-751-6991	.8125-12UN-3A	.7543	2	.8125 +.0006	.7904 - .0006	.7543 +.0003	.0002	6	.0208
1	5220-751-6992	.8125-16UN-2A	.7655	1	.8116	.7520 + .0006		.0003	10	.020
2	5220-751-6993	.8125-16UN-2A	.7655	2	.8110 +.0006	.7926 - .0006	.7655 +.0003	.00015	8	.0156
1	5220-751-6994	.8125-16UN-3A	.7683	1	.8131	.7548 + .0006		.0003	10	.020
2	5220-751-6995	.8125-16UN-3A	.7683	2	.8125 +.0006	.7954 - .0006	.7683 +.0003	.00015	8	.0156
1	5220-751-5698	.8125-20UNEF-2A	.7743	1	.8117	.7635 + .0005		.0003	15	.016
2	5220-751-5699	.8125-20UNEF-2A	.7743	2	.8112 +.0005	.7960 - .0005	.7743 +.0003	.00015	8	.0125
1	5220-751-5700	.8125-20UNEF-3A	.7767	1	.8130	.7659 + .0005		.0003	15	.016
2	5220-751-5701	.8125-20UNEF-3A	.7767	2	.8125 +.0005	.7984 - .0005	.7767 +.0003	.00015	8	.0125
1	7518226	.8125-28UN-2A	.7843	1	.8116	.7766 + .0005		.0003	15	.011
2	7518227	.8125-28UN-2A	.7843	2	.8111 +.0005	.7998 - .0005	.7843 +.0003	.00015	8	.0089
1	7518228	.8125-28UN-3A	.7864	1	.8130	.7787 + .0005		.0003	15	.011
2	7518229	.8125-28UN-3A	.7864	2	.8125 +.0005	.8019 - .0005	.7864 +.0003	.00015	8	.0089
1	7518230	.8125-32UN-2A	.7875	1	.8114	.7807 + .0005		.0003	15	.010
2	7518231	.8125-32UN-2A	.7875	2	.8109 +.0005	.8010 - .0005	.7875 +.0003	.00015	12	.0078
1	7518232	.8125-32UN-3A	.7895	1	.8130	.7827 + .0005		.0003	15	.010
2	7518233	.8125-32UN-3A	.7895	2	.8125 +.0005	.8030 - .0005	.7895 +.0003	.00015	12	.0078
1	5220-751-5702	.8750-9UNC-1A	.7914	1	.8738	.7673 + .0007		.0003	10	.035
2	5220-751-5703	.8750-9UNC-1A	.7914	2	.8731 +.0007	.8395 - .0007	.7914 +.0003	.00025	6	.0278
1	5220-751-5704	.8750-9UNC-2A	.7946	1	.8738	.7705 + .0007		.0003	10	.035
2	5220-751-5705	.8750-9UNC-2A	.7946	2	.8731 +.0007	.8427 - .0007	.7946 +.0003	.00025	6	.0278

* 1. LO (Not Go) Thread Ring Gage 2. Truncated Thread Setting Plug Gage

ORDBA Form 20-1578, (OT) 4 May 61

Downloaded from http://www.everyspec.com

Table I. Tabulation of Design and Identification Data - Unified Standard Thread (Continued)

FIG. NO.	MARKING ON GAGE HANDLE				GAGE DIMENSIONS					
	MIL-STD PART NUMBER	THREAD DESIGNATION	LO PD / LO PD	1 / 2	MAJOR DIA / MAJOR DIA FULL PORTION	MINOR DIA / MAJOR DIA TRUNCATED PORTION	PITCH DIA	TOL ON LEAD	HALF ANGLE TOL	ROOT CLEAR
A	B	C	D	*	E	F	G	H	J	K
1	5220-751-5706	.8750-9UNC-3A	.7981	1	.8757	.7740 + .0007		.0003	10	.035
2	5220-751-5707	.8750-9UNC-3A	.7981	2	.8750 +.0007	.8462 - .0007	.7981 +.0003	.00025	6	.0278
1	5220-751-6996	.8750-12UN-2A	.8137	1	.8739	.7957 + .0006		.0003	10	.026
2	5220-751-6997	.8750-12UN-2A	.8137	2	.8733 +.0006	.8498 - .0006	.8137 +.0003	.0002	6	.0208
1	5220-751-6998	.8750-12UN-3A	.8168	1	.8756	.7988 + .0006		.0003	10	.026
2	5220-751-6999	.8750-12UN-3A	.8168	2	.8750 +.0006	.8529 - .0006	.8168 +.0003	.0002	6	.0208
1	5220-751-5708	.8750-14UNF-1A	.8189	1	.8734	.8034 + .0006		.0003	10	.022
2	5220-751-5709	.8750-14UNF-1A	.8189	2	.8725 +.0006	.8498 - .0006	.8189 +.0003	.0002	6	.0179
1	5220-751-5710	.8750-14UNF-2A	.8216	1	.8740	.8061 + .0006		.0003	10	.022
2	5220-751-5711	.8750-14UNF-2A	.8216	2	.8734 +.0006	.8525 - .0006	.8216 +.0003	.0002	6	.0179
1	5220-751-5712	.8750-14UNF-3A	.8245	1	.8756	.8090 + .0006		.0003	10	.022
2	5220-751-5713	.8750-14UNF-3A	.8245	2	.8750 +.0006	.8554 - .0006	.8245 +.0003	.0002	6	.0179
1	5220-751-7000	.8750-16UN-2A	.8280	1	.8741	.8145 + .0006		.0003	10	.020
2	5220-751-7001	.8750-16UN-2A	.8280	2	.8735 +.0006	.8551 - .0006	.8280 +.0003	.00015	8	.0156
1	5220-751-2230	.8750-16UN-3A-3	.8308	1	.8756	.8173 + .0006		.0003	10	.020
2	5220-751-2231	.8750-16UN-3A-3	.8308	2	.8750 +.0006	.8579 - .0006	.8308 +.0003	.00015	8	.0156
1	5220-751-5714	.8750-20UNEF-2A	.8368	1	.8742	.8260 + .0005		.0003	15	.016
2	5220-751-5715	.8750-20UNEF-2A	.8368	2	.8737 +.0005	.8585 - .0005	.8368 +.0003	.00015	8	.0125
1	5220-751-5716	.8750-20UNEF-3A-3	.8392	1	.8755	.8284 + .0005		.0003	15	.016
2	5220-751-5717	.8750-20UNEF-3A-3	.8392	2	.8750 +.0005	.8609 - .0005	.8392 +.0003	.00015	8	.0125
1	7518234	.8750-28UN-2A	.8468	1	.8741	.8391 + .0005		.0003	15	.011
2	7518235	.8750-28UN-2A	.8468	2	.8736 +.0005	.8623 - .0005	.8468 +.0003	.00015	8	.0089

* 1. LO (Not Go) Thread Ring Gage 2. Truncated Thread Setting Plug Gage

ORDBA Form 20-1578, (OT) 4 May 61.

Downloaded from http://www.everyspec.com

Table I. Tabulation of Design and Identification Data - Unified Standard Thread (Continued)

FIG. NO.	MARKING ON GAGE HANDLE				GAGE DIMENSIONS					
	MIL-STD PART NUMBER	THREAD DESIGNATION	LO PD / LO PD	1 / 2	MAJOR DIA / MAJOR DIA FULL PORTION	MINOR DIA / MAJOR DIA TRUNCATED PORTION	PITCH DIA	TOL ON LEAD	HALF ANGLE TOL	ROOT CLEAR
A	B	C	D	*	E	F	G	H	J	K
1	7518236	.8750-28UN-3A	.8489	1	.8755	.8412 + .0005		.0003	15	.011
2	7518237	.8750-28UN-3A	.8489	2	.8750 +.0005	.8644 - .0005	.8489 +.0003	.00015	8	.0089
1	7518238	.8750-32UN-2A	.8500	1	.8739	.8432 + .0005		.0003	15	.010
2	7518239	.8750-32UN-2A	.8500	2	.8734 +.0005	.8635 - .0005	.8500 +.0003	.00015	12	.0078
1	7518240	.8750-32UN-3A	.8520	1	.8755	.8452 + .0005		.0003	15	.010
2	7518241	.8750-32UN-3A	.8520	2	.8750 +.0005	.8655 - .0005	.8520 +.0003	.00015	12	.0078
1	5220-751-7002	.9375-12UN-2A	.8760	1	.9364	.8580 + .0006		.0003	10	.026
2	5220-751-7003	.9375-12UN-2A	.8760	2	.9358 +.0006	.9121 - .0006	.8760 +.0003	.0002	6	.0208
1	5220-751-7004	.9375-12UN-3A	.8793	1	.9381	.8613 + .0006		.0003	10	.026
2	5220-751-7005	.9375-12UN-3A	.8793	2	.9375 +.0006	.9154 - .0006	.8793 +.0003	.0002	6	.0208
1	5220-751-7006	.9375-16UN-2A	.8904	1	.9366	.8769 + .0006		.0003	10	.020
2	5220-751-7007	.9375-16UN-2A	.8904	2	.9360 +.0006	.9175 - .0006	.8904 +.0003	.00015	8	.0156
1	5220-751-7008	.9375-16UN-3A	.8932	1	.9381	.8797 + .0006		.0003	10	.020
2	5220-751-7009	.9375-16UN-3A	.8932	2	.9375 +.0006	.9203 - .0006	.8932 +.0003	.00015	8	.0156
1	5220-751-5718	.9375-20UNEF-2A	.8991	1	.9366	.8883 + .0005		.0003	15	.016
2	5220-751-5719	.9375-20UNEF-2A	.8991	2	.9361 +.0005	.9208 - .0005	.8991 +.0003	.00015	8	.0125
1	5220-751-5720	.9375-20UNEF-3A	.9016	1	.9380	.8908 + .0005		.0003	15	.016
2	5220-751-5721	.9375-20UNEF-3A	.9016	2	.9375 +.0005	.9233 - .0005	.9016 +.0003	.00015	8	.0125
1	7518242	.9375-28UN-2A	.9091	1	.9364	.9014 + .0005		.0003	15	.011
2	7518243	.9375-28UN-2A	.9091	2	.9359 +.0005	.9246 - .0005	.9091 +.0003	.00015	8	.0089
1	7518244	.9375-28UN-3A	.9113	1	.9380	.9036 + .0005		.0003	15	.011
2	7518245	.9375-28UN-3A	.9113	2	.9375 +.0005	.9268 - .0005	.9113 +.0003	.00015	8	.0089

* 1. LO (Not Go) Thread Ring Gage 2. Truncated Thread Setting Plug Gage

ORDBA Form 20-1578, (OT) 4 May 61

Downloaded from http://www.everyspec.com

Table I. Tabulation of Design and Identification Data - Unified Standard Thread (Continued)

FIG. NO.	MARKING ON GAGE HANDLE				GAGE DIMENSIONS					
	MIL-STD PART NUMBER	THREAD DESIGNATION	LO PD / LO PD	1 / 2	MAJOR DIA / MAJOR DIA FULL PORTION	MINOR DIA / MAJOR DIA TRUNCATED PORTION	PITCH DIA	TOL ON LEAD	HALF ANGLE TOL	ROOT CLEAR
A	B	C	D	*	E	F	G	H	J	K
1	7518246	.9375-32UN-2A	.9123	1	.9362	.9055 + .0005		.0003	15	.010
2	7518247	.9375-32UN-2A	.9123	2	.9357 +.0005	.9258 - .0005	.9123 +.0003	.00015	12	.0078
1	7518248	.9375-32UN-3A	.9144	1	.9380	.9076 + .0005		.0003	15	.010
2	7518249	.9375-32UN-3A	.9144	2	.9375 +.0005	.9279 - .0005	.9144 +.0003	.00015	12	.0078
1	5220-751-5722	1.0000-8UNC-1A	.9067	1	.9987	.8796 + .0007		.0004	5	.039
2	5220-751-5723	1.0000-8UNC-1A	.9067	2	.9980 +.0007	.9608 - .0007	.9067 +.0004	.00025	5	.0312
1	5220-751-5724	1.0000-8UNC-2A	.9100	1	.9987	.8829 + .0007		.0004	5	.039
2	5220-751-5725	1.0000-8UNC-2A	.9100	2	.9980 +.0007	.9641 - .0007	.9100 +.0004	.00025	5	.0312
1	5220-751-5726	1.0000-8UNC-3A	.9137	1	1.0007	.8866 + .0007		.0004	5	.039
2	5220-751-5727	1.0000-8UNC-3A	.9137	2	1.0000 +.0007	.9678 - .0007	.9137 +.0004	.00025	5	.0312
1	5220-751-5728	1.0000-12UNF-1A	.9353	1	.9984	.9173 + .0006		.0003	10	.026
2	5220-751-5729	1.0000-12UNF-1A	.9353	2	.9978 +.0006	.9714 - .0006	.9353 +.0003	.0002	6	.0208
1	5220-751-5730	1.0000-12UNF-2A	.9382	1	.9988	.9202 + .0006		.0003	10	.026
2	5220-751-5731	1.0000-12UNF-2A	.9382	2	.9982 +.0006	.9743 - .0006	.9382 +.0003	.0002	6	.0208
1	5220-751-5732	1.0000-12UNF-3A	.9415	1	1.0006	.9235 + .0006		.0003	10	.026
2	5220-751-5733	1.0000-12UNF-3A	.9415	2	1.0000 +.0006	.9776 - .0006	.9415 +.0003	.0002	6	.0208
1	5220-751-7010	1.0000-16UN-2A	.9529	1	.9991	.9394 + .0006		.0003	10	.020
2	5220-751-7011	1.0000-16UN-2A	.9529	2	.9985 +.0006	.9800 - .0006	.9529 +.0003	.00015	8	.0156
1	5220-751-2266	1.0000-16UN-3A-3	.9557	1	1.0006	.9422 + .0006		.0003	10	.020
2	5220-751-2267	1.0000-16UN-3A-3	.9557	2	1.0000 +.0006	.9828 - .0006	.9557 +.0003	.00015	8	.0156
1	5220-751-5740	1.0000-20UNEF-2A	.9616	1	.9991	.9508 + .0005		.0003	15	.016
2	5220-751-5741	1.0000-20UNEF-2A	.9616	2	.9986 +.0005	.9833 - .0005	.9616 +.0003	.00015	8	.0125

* 1. LO (Not Go) Thread Ring Gage 2. Truncated Thread Setting Plug Gage

ORDBA Form 20-1578, (OT) 4 May 61

Downloaded from http://www.everyspec.com

Table I. Tabulation of Design and Identification Data - Unified Standard Thread (Continued)

FIG. NO.	MARKING ON GAGE HANDLE				GAGE DIMENSIONS					
	MIL-STD PART NUMBER	THREAD DESIGNATION	LO PD / LO PD	1 / 2	MAJOR DIA / MAJOR DIA FULL PORTION	MINOR DIA / MAJOR DIA TRUNCATED PORTION	PITCH DIA	TOL ON LEAD	HALF ANGLE TOL	ROOT CLEAR
A	B	C	D	*	E	F	G	H	J	K
1	5220-751-5742	1.0000-20UNEF-3A-3	.9641	1	1.0005	.9533 + .0005		.0003	15	.016
2	5220-751-5743	1.0000-20UNEF-3A-3	.9641	2	1.0000 +.0005	.9858 - .0005	.9641 +.0003	.00015	8	.0125
1	7518250	1.0000-28UN-2A	.9716	1	.9989	.9639 + .0005		.0003	15	.011
2	7518251	1.0000-28UN-2A	.9716	2	.9984 +.0005	.9871 - .0005	.9716 +.0003	.00015	8	.0089
1	7518252	1.0000-28UN-3A	.9738	1	1.0005	.9661 + .0005		.0003	15	.011
2	7518253	1.0000-28UN-3A	.9738	2	1.0000 +.0005	.9893 - .0005	.9738 +.0003	.00015	8	.0089
1	7518254	1.0000-32UN-2A	.9748	1	.9987	.9680 + .0005		.0003	15	.010
2	7518255	1.0000-32UN-2A	.9748	2	.9982 +.0005	.9883 - .0005	.9748 +.0003	.00015	12	.0078
1	7518256	1.0000-32UN-3A	.9769	1	1.0005	.9701 + .0005		.0003	15	.010
2	7518257	1.0000-32UN-3A	.9769	2	1.0000 +.0005	.9904 - .0005	.9769 +.0003	.00015	12	.0078
1	7518258	1.0625-8UN-2A	.9725	1	1.0612	.9454 + .0007		.0004	5	.039
2	7518259	1.0625-8UN-2A	.9725	2	1.0605 +.0007	1.0266 - .0007	.9725 +.0004	.00025	5	.0312
1	7518260	1.0625-8UN-3A	.9762	1	1.0632	.9491 + .0007		.0004	5	.039
2	7518261	1.0625-8UN-3A	.9762	2	1.0625 +.0007	1.0303 - .0007	.9762 +.0004	.00025	5	.0312
1	5220-751-5744	1.0625-12UN-2A	1.0010	1	1.0614	.9830 + .0006		.0003	10	.026
2	5220-751-5745	1.0625-12UN-2A	1.0010	2	1.0608 +.0006	1.0371 - .0006	1.0010 +.0003	.0002	6	.0208
1	5220-751-5746	1.0625-12UN-3A	1.0042	1	1.0631	.9862 + .0006		.0003	10	.026
2	5220-751-5747	1.0625-12UN-3A	1.0042	2	1.0625 +.0006	1.0403 - .0006	1.0042 +.0003	.0002	6	.0208
1	5220-751-7012	1.0625-16UN-2A	1.0154	1	1.0616	1.0019 + .0006		.0003	10	.020
2	5220-751-7013	1.0625-16UN-2A	1.0154	2	1.0610 +.0006	1.0425 - .0006	1.0154+.0003	.00015	8	.0156
1	5220-751-2278	1.0625-16UN-3A-3	1.0182	1	1.0631	1.0047 + .0006		.0003	10	.020
2	5220-751-2279	1.0625-16UN-3A-3	1.0182	2	1.0625 +.0006	1.0453 - .0006	1.0182 +.0003	.00015	8	.0156

* 1. LO (Not Go) Thread Ring Gage 2. Truncated Thread Setting Plug Gage

ORDBA Form 20-1578, (OT) 4 May 61

Downloaded from http://www.everyspec.com

Table I. Tabulation of Design and Identification Data - Unified Standard Thread (Continued)

FIG. NO.	MARKING ON GAGE HANDLE				GAGE DIMENSIONS					
	MIL-STD PART NUMBER	THREAD DESIGNATION	LO PD / LO PD	1 / 2	MAJOR DIA / MAJOR DIA FULL PORTION	MINOR DIA / MAJOR DIA TRUNCATED PORTION	PITCH DIA	TOL ON LEAD	HALF ANGLE TOL	ROOT CLEAR
A	B	C	D	*	E	F	G	H	J	K
1	5220-751-5748	1.0625-18UNEF-2A	1.0203	1	1.0616	1.0083 + .0005		.0003	10	.017
2	5220-751-5749	1.0625-18UNEF-2A	1.0203	2	1.0611 +.0005	1.0444 - .0005	1.0203 +.0003	.00015	8	.0139
1	5220-751-5750	1.0625-18UNEF-3A-3	1.0228	1	1.0630	1.0108 + .0005		.0003	10	.017
2	5220-751-5751	1.0625-18UNEF-3A-3	1.0228	2	1.0625 +.0005	1.0469 - .0005	1.0228 +.0003	.00015	8	.0139
1	7518262	1.0625-20UN-2A	1.0241	1	1.0616	1.0133 + .0005		.0003	15	.016
2	7518263	1.0625-20UN-2A	1.0241	2	1.0611 +.0005	1.0458 - .0005	1.0241 +.0003	.00015	8	.0125
1	7518264	1.0625-20UN-3A	1.0266	1	1.0630	1.0158 + .0005		.0003	15	.016
2	7518265	1.0625-20UN-3A	1.0266	2	1.0625 +.0005	1.0483 - .0005	1.0266 +.0003	.00015	8	.0125
1	7518266	1.0625-28UN-2A	1.0341	1	1.0614	1.0264 + .0005		.0003	15	.011
2	7518267	1.0625-28UN-2A	1.0341	2	1.0609 +.0005	1.0496 - .0005	1.0341 +.0003	.00015	8	.0089
1	7518268	1.0625-28UN-3A	1.0363	1	1.0630	1.0286 + .0005		.0003	15	.011
2	7518269	1.0625-28UN-3A	1.0363	2	1.0625 +.0005	1.0518 - .0005	1.0363 +.0003	.00015	8	.0089
1	5220-751-5752	1.1250-7UNC-1A	1.0191	1	1.1235	.9882 + .0007		.0004	5	.045
2	5220-751-5753	1.1250-7UNC-1A	1.0191	2	1.1228 +.0007	1.0810 - .0007	1.0191 +.0004	.0003	5	.0357
1	5220-751-5754	1.1250-7UNC-2A	1.0228	1	1.1235	.9919 + .0007		.0004	5	.045
2	5220-751-5755	1.1250-7UNC-2A	1.0228	2	1.1228 +.0007	1.0847 - .0007	1.0228 +.0004	.0003	5	.0357
1	5220-751-5756	1.1250-7UNC-3A	1.0268	1	1.1257	.9959 + .0007		.0004	5	.045
2	5220-751-5757	1.1250-7UNC-3A	1.0268	2	1.1250 +.0007	1.0887 - .0007	1.0268 +.0004	.0003	5	.0357
1	5220-751-5758	1.1250-8UN-2A	1.0348	1	1.1236	1.0077 + .0007		.0004	5	.039
2	5220-751-5759	1.1250-8UN-2A	1.0348	2	1.1229 +.0007	1.0889 - .0007	1.0348 +.0004	.00025	5	.0312
1	5220-751-5760	1.1250-8UN-3A	1.0386	1	1.1257	1.0115 + .0007		.0004	5	.039
2	5220-751-5761	1.1250-8UN-3A	1.0386	2	1.1250 +.0007	1.0927 - .0007	1.0386 +.0004	.00025	5	.0312

* 1. Not Go Thread Ring Gage
LO (Not Go) Thread Ring Gage
2. Truncated Thread Setting Plug Gage

ORDBI Form [illegible] (OI) 4 May 61

Downloaded from http://www.everyspec.com

Table I. Tabulation of Design and Identification Data - Unified Standard Thread (Continued)

FIG. NO.	MARKING ON GAGE HANDLE				GAGE DIMENSIONS					
	MIL-STD PART NUMBER	THREAD DESIGNATION	LO PD	1	MAJOR DIA	MINOR DIA	———	TOL ON LEAD	HALF ANGLE TOL	ROOT CLEAR
			LO PD	2	MAJOR DIA FULL PORTION	MAJOR DIA TRUNCATED PORTION	PITCH DIA			
A	B	C	D	*	E	F	G	H	J	K
1	5220-751-5762	1.1250-12UNF-1A	1.0601	1	1.1232	1.0421 + .0006		.0003	10	.026
2	5220-751-5763	1.1250-12UNF-1A	1.0601	2	1.1226 +.0006	1.0962 - .0006	1.0601 +.0003	.0002	6	.0208
1	5220-751-5764	1.1250-12UNF-2A	1.0631	1	1.1238	1.0451 + .0006		.0003	10	.026
2	5220-751-5765	1.1250-12UNF-2A	1.0631	2	1.1232 +.0006	1.0992 - .0006	1.0631 +.0003	.0002	6	.0208
1	5220-751-5766	1.1250-12UNF-3A	1.0664	1	1.1256	1.0484 + .0006		.0003	10	.026
2	5220-751-5767	1.1250-12UNF-3A	1.0664	2	1.1250 +.0006	1.1025 - .0006	1.0664 +.0003	.0002	6	.0208
1	5220-751-7014	1.1250-16UN-2A	1.0779	1	1.1241	1.0644 + .0006		.0003	10	.020
2	5220-751-7015	1.1250-16UN-2A	1.0779	2	1.1235 +.0006	1.1050 - .0006	1.0779 +.0003	.00015	8	.0156
1	5220-751-7016	1.1250-16UN-3A	1.0807	1	1.1256	1.0672 + .0006		.0003	10	.020
2	5220-751-7017	1.1250-16UN-3A	1.0807	2	1.1250 +.0006	1.1078 - .0006	1.0807 +.0003	.00015	8	.0156
1	5220-751-5768	1.1250-18UNEF-2A	1.0828	1	1.1241	1.0708 + .0005		.0003	10	.017
2	5220-751-5769	1.1250-18UNEF-2A	1.0828	2	1.1236 +.0005	1.1069 - .0005	1.0828 +.0003	.00015	8	.0139
1	5220-751-5770	1.1250-18UNEF-3A-3	1.0853	1	1.1255	1.0733 + .0005		.0003	10	.017
2	5220-751-5771	1.1250-18UNEF-3A-3	1.0853	2	1.1250 +.0005	1.1094 - .0005	1.0853 +.0003	.00015	8	.0139
1	7518270	1.1250-20UN-2A	1.0866	1	1.1241	1.0758 + .0005		.0003	15	.016
2	7518271	1.1250-20UN-2A	1.0866	2	1.1236 +.0005	1.1083 - .0005	1.0866 +.0003	.00015	8	.0125
1	7518272	1.1250-20UN-3A	1.0891	1	1.1255	1.0783 + .0005		.0003	15	.016
2	7518273	1.1250-20UN-3A	1.0891	2	1.1250 +.0005	1.1108 - .0005	1.0891 +.0003	.00015	8	.0125
1	7518274	1.1250-28UN-2A	1.0966	1	1.1239	1.0889 + .0005		.0003	15	.011
2	7518275	1.1250-28UN-2A	1.0966	2	1.1234 +.0005	1.1121 - .0005	1.0966 +.0003	.00015	8	.0089
1	7518276	1.1250-28UN-3A	1.0988	1	1.1255	1.0911 + .0005		.0003	15	.011
2	7518277	1.1250-28UN-3A	1.0988	2	1.1250 +.0005	1.1143 - .0005	1.0988 +.0003	.00015	8	.0089

* 1. LO (Not Go) Thread Ring Gage 2. Truncated Thread Setting Plug Gage

ORDBA Form 20-1578, (OT) 4 May 61

Downloaded from http://www.everyspec.com

Table I. Tabulation of Design and Identification Data - Unified Standard Thread (Continued)

FIG. NO.	MARKING ON GAGE HANDLE				GAGE DIMENSIONS					
	MIL-STD PART NUMBER	THREAD DESIGNATION	LO PD / LO PD	1 / 2	MAJOR DIA / MAJOR DIA FULL PORTION	MINOR DIA / MAJOR DIA TRUNCATED PORTION	PITCH DIA	TOL ON LEAD	HALF ANGLE TOL	ROOT CLEAR
A	B	C	D	*	E	F	G	H	J	K
1	7518278	1.1875-8UN-2A	1.0972	1	1.1861	1.0701 + .0007		.0004	5	.039
2	7518279	1.1875-8UN-2A	1.0972	2	1.1854 +.0007	1.1513 - .0007	1.0972 +.0004	.00025	5	.0312
1	7518280	1.1875-8UN-3A	1.1011	1	1.1882	1.0740 + .0007		.0004	5	.039
2	7518281	1.1875-8UN-3A	1.1011	2	1.1875 +.0007	1.1552 - .0007	1.1011 +.0004	.00025	5	.0312
1	5220-751-5772	1.1875-12UN-2A	1.1259	1	1.1864	1.1079 + .0006		.0003	10	.026
1	5220-751-5773	1.1875-12UN-2A	1.1259	2	1.1858 +.0006	1.1620 - .0006	1.1259 +.0003	.0002	6	.0208
1	5220-751-5774	1.1875-12UN-3A	1.1291	1	1.1881	1.1111 + .0006		.0003	10	.026
2	5220-751-5775	1.1875-12UN-3A	1.1291	2	1.1875 +.0006	1.1652 - .0006	1.1291 +.0003	.0002	6	.0208
1	5220-751-7018	1.1875-16UN-2A	1.1403	1	1.1866	1.1268 + .0006		.0003	10	.020
2	5220-751-7019	1.1875-16UN-2A	1.1403	2	1.1860 +.0006	1.1674 - .0006	1.1403 +.0003	.00015	8	.0156
1	5220-751-2314	1.1875-16UN-3A-3	1.1431	1	1.1881	1.1296 + .0006		.0003	10	.020
2	5220-751-2315	1.1875-16UN-3A-3	1.1431	2	1.1875 +.0006	1.1702 - .0006	1.1431 +.0003	.00015	8	.0156
1	5220-751-5776	1.1875-18UNEF-2A	1.1450	1	1.1865	1.1330 + .0005		.0003	10	.017
2	5220-751-5777	1.1875-18UNEF-2A	1.1450	2	1.1860 +.0005	1.1691 - .0005	1.1450 +.0003	.00015	8	.0139
1	5220-751-5778	1.1875-18UNEF-3A-3	1.1478	1	1.1880	1.1358 + .0005		.0003	10	.017
2	5220-751-5779	1.1875-18UNEF-3A-3	1.1478	2	1.1875 +.0005	1.1719 - .0005	1.1478 +.0003	.00015	8	.0139
1	7518282	1.1875-20UN-2A	1.1489	1	1.1866	1.1381 + .0005		.0003	15	.016
2	7518283	1.1875-20UN-2A	1.1489	2	1.1861 +.0005	1.1706 - .0005	1.1489 +.0003	.00015	8	.0125
1	7518284	1.1875-20UN-3A	1.1515	1	1.1880	1.1407 + .0005		.0003	15	.016
2	7518285	1.1875-20UN-3A	1.1515	2	1.1875 +.0005	1.1732 - .0005	1.1515 +.0003	.00015	8	.0125
1	7518286	1.1875-28UN-2A	1.1590	1	1.1863	1.1513 + .0005		.0003	15	.011
2	7518287	1.1875-28UN-2A	1.1590	2	1.1858 +.0005	1.1745 - .0005	1.1590 +.0003	.00015	8	.0089

* 1. LO (Not Go) Thread Ring Gage 2. Truncated Thread Setting Plug Gage

ORDBA Form 20-1378, (OT) 4 May 61

Downloaded from http://www.everyspec.com

Table I. Tabulation of Design and Identification Data - Unified Standard Thread (Continued)

FIG. NO.	MARKING ON GAGE HANDLE				GAGE DIMENSIONS					
	MIL-STD PART NUMBER	THREAD DESIGNATION	LO PD / LO PD	1 / 2	MAJOR DIA / MAJOR DIA FULL PORTION	MINOR DIA / MAJOR DIA TRUNCATED PORTION	PITCH DIA	TOL ON LEAD	HALF ANGLE TOL	ROOT CLEAR
A	B	C	D	*	E	F	G	H	J	K
1	7518288	1.1875-28UN-3A	1.1612	1	1.1880	1.1535 + .0005		.0003	15	.011
2	7518289	1.1875-28UN-3A	1.1612	2	1.1875 +.0005	1.1767 - .0005	1.1612 +.0003	.00015	8	.0089
1	5220-751-5780	1.2500-7UNC-1A	1.1439	1	1.2485	1.1130 + .0007		.0004	5	.045
2	5220-751-5781	1.2500-7UNC-1A	1.1439	2	1.2478 +.0007	1.2058 - .0007	1.1439 +.0004	.0003	5	.0357
1	5220-751-5782	1.2500-7UNC-2A	1.1476	1	1.2485	1.1167 + .0007		.0004	5	.045
2	5220-751-5783	1.2500-7UNC-2A	1.1476	2	1.2478 +.0007	1.2095 - .0007	1.1476 +.0004	.0003	5	.0357
1	5220-751-5784	1.2500-7UNC-3A	1.1517	1	1.2507	1.1208 + .0007		.0004	5	.045
2	5220-751-5785	1.2500-7UNC-3A	1.1517	2	1.2500 +.0007	1.2136 - .0007	1.1517 +.0004	.0003	5	.0357
1	5220-751-5786	1.2500-8UN-2A	1.1597	1	1.2486	1.1326 + .0007		.0004	5	.039
2	5220-751-5787	1.2500-8UN-2A	1.1597	2	1.2479 +.0007	1.2138 - .0007	1.1597 +.0004	.00025	5	.0312
1	5220-751-5788	1.2500-8UN-3A	1.1635	1	1.2507	1.1364 + .0007		.0004	5	.039
2	5220-751-5789	1.2500-8UN-3A	1.1635	2	1.2500 +.0007	1.2176 - .0007	1.1635 +.0004	.00025	5	.0312
1	5220-751-5790	1.2500-12UNF-1A	1.1849	1	1.2482	1.1669 + .0006		.0003	10	.026
2	5220-751-5791	1.2500-12UNF-1A	1.1849	2	1.2474 +.0006	1.2210 - .0006	1.1849 +.0003	.0002	6	.0208
1	5220-751-5792	1.2500-12UNF-2A	1.1879	1	1.2488	1.1699 + .0006		.0003	10	.026
2	5220-751-5793	1.2500-12UNF-2A	1.1879	2	1.2482 +.0006	1.2240 - .0006	1.1879 +.0003	.0002	6	.0208
1	5220-751-5794	1.2500-12UNF-3A	1.1913	1	1.2506	1.1733 + .0006		.0003	10	.026
2	5220-751-5795	1.2500-12UNF-3A	1.1913	2	1.2500 +.0006	1.2274 - .0006	1.1913 +.0003	.0002	6	.0208
1	5220-751-7020	1.2500-16UN-2A	1.2028	1	1.2491	1.1893 + .0006		.0003	10	.020
2	5220-751-7021	1.2500-16UN-2A	1.2028	2	1.2485 +.0006	1.2299 - .0006	1.2028 +.0003	.00015	8	.0156
1	5220-751-2338	1.2500-16UN-3A-3	1.2056	1	1.2506	1.1921 + .0006		.0003	10	.020
2	5220-751-2339	1.2500-16UN-3A-3	1.2056	2	1.2500 +.0006	1.2327 - .0006	1.2056 +.0003	.00015	8	.0156

* 1. LO (Not Go) Thread Ring Gage 2. Truncated Thread Setting Plug Gage

ORDBA Form 20-1578, (OT) 4 May 61

Downloaded from http://www.everyspec.com

Table I. Tabulation of Design and Identification Data - Unified Standard Thread (Continued)

FIG. NO.	MARKING ON GAGE HANDLE				GAGE DIMENSIONS					
	MIL-STD PART NUMBER	THREAD DESIGNATION	LO PD	1	MAJOR DIA	MINOR DIA	———	TOL ON LEAD	HALF ANGLE TOL	ROOT CLEAR
			LO PD	2	MAJOR DIA FULL PORTION	MAJOR DIA TRUNCATED PORTION	PITCH DIA			
A	B	C	D	*	E	F	G	H	J	K
1	5220-751-5796	1.2500-18UNEF-2A	1.2075	1	1.2490	1.1955 + .0005		.0003	10	.017
2	5220-751-5797	1.2500-18UNEF-2A	1.2075	2	1.2485 +.0005	1.2316 - .0005	1.2075 +.0003	.00015	8	.0139
1	5220-751-5798	1.2500-18UNEF-3A	1.2103	1	1.2505	1.1983 + .0005		.0003	10	.017
2	5220-751-5799	1.2500-18UNEF-3A	1.2103	2	1.2500 +.0005	1.2344 - .0005	1.2103 +.0003	.00015	8	.0139
1	7518290	1.2500-20UN-2A	1.2114	1	1.2491	1.2006 + .0005		.0003	15	.016
2	7518291	1.2500-20UN-2A	1.2114	2	1.2486 +.0005	1.2331 - .0005	1.2114 +.0003	.00015	8	.0125
1	7518292	1.2500-20UN-3A	1.2140	1	1.2505	1.2032 + .0005		.0003	15	.016
2	7518293	1.2500-20UN-3A	1.2140	2	1.2500 +.0005	1.2357 - .0005	1.2140 +.0003	.00015	8	.0125
1	7518294	1.2500-28UN-2A	1.2215	1	1.2488	1.2138 + .0005		.0003	15	.011
2	7518295	1.2500-28UN-2A	1.2215	2	1.2483 +.0005	1.2370 - .0005	1.2215 +.0003	.00015	8	.0089
1	7518296	1.2500-28UN-3A	1.2237	1	1.2505	1.2160 + .0005		.0003	15	.011
2	7518297	1.2500-28UN-3A	1.2237	2	1.2500 +.0005	1.2392 - .0005	1.2237 +.0003	.00015	8	.0089
1	7518298	1.3125-8UN-2A	1.2221	1	1.3111	1.1950 + .0007		.0004	5	.039
2	7518299	1.3125-8UN-2A	1.2221	2	1.3104 +.0007	1.2762 - .0007	1.2221 +.0004	.00025	5	.0312
1	7518300	1.3125-8UN-3A	1.2260	1	1.3132	1.1989 + .0007		.0004	5	.039
2	7518301	1.3125-8UN-3A	1.2260	2	1.3125 +.0007	1.2801 - .0007	1.2260 +.0004	.00025	5	.0312
1	5220-751-5800	1.3125-12UN-2A	1.2509	1	1.3114	1.2329 + .0006		.0003	10	.026
2	5220-751-5801	1.3125-12UN-2A	1.2509	2	1.3108 +.0006	1.2870 - .0006	1.2509 +.0003	.0002	6	.0208
1	5220-751-5802	1.3125-12UN-3A	1.2541	1	1.3131	1.2361 + .0006		.0003	10	.026
2	5220-751-5803	1.3125-12UN-3A	1.2541	2	1.3125 +.0006	1.2902 - .0006	1.2541 +.0003	.0002	6	.0208
1	5220-751-7022	1.3125-16UN-2A	1.2653	1	1.3116	1.2518 + .0006		.0003	10	.020
2	5220-751-7023	1.3125-16UN-2A	1.2653	2	1.3110 +.0006	1.2524 - .0006	1.2653 +.0003	.00015	8	.0156

* 1. LO (Not Go) Thread Ring Gage 2. Truncated Thread Setting Plug Gage

ORDBA Form 20-1578, (OT) 4 May 61

Downloaded from http://www.everyspec.com

Table I. Tabulation of Design and Identification Data - Unified Standard Thread (Continued)

FIG. NO.	MARKING ON GAGE HANDLE			GAGE DIMENSIONS						
	MIL-STD PART NUMBER	THREAD DESIGNATION	LO PD / LO PD	1 / 2	MAJOR DIA / MAJOR DIA FULL PORTION	MINOR DIA / MAJOR DIA TRUNCATED PORTION	PITCH DIA	TOL ON LEAD	HALF ANGLE TOL	ROOT CLEAR
A	B	C	D	*	E	F	G	H	J	K
1	5220-751-7024	1.3125-16UN-3A	1.2681	1	1.3131	1.2546 + .0006		.0003	10	.020
2	5220-751-7025	1.3125-16UN-3A	1.2681	2	1.3125 +.0006	1.2952 - .0006	1.2681 +.0003	.00015	8	.0156
1	5220-751-5804	1.3125-18UNEF-2A	1.2700	1	1.3115	1.2580 + .0005		.0003	10	.017
2	5220-751-5805	1.3125-18UNEF-2A	1.2700	2	1.3110 +.0005	1.2941 - .0005	1.2700 +.0003	.00015	8	.0139
1	5220-751-5806	1.3125-18UNEF-3A	1.2728	1	1.3130	1.2608 + .0005		.0003	10	.017
2	5220-751-5807	1.3125-18UNEF-3A	1.2728	2	1.3125 +.0005	1.2969 - .0005	1.2728 +.0003	.00015	8	.0139
1	7518302	1.3125-20UN-2A	1.2739	1	1.3116	1.2631 + .0005		.0003	15	.016
2	7518303	1.3125-20UN-2A	1.2739	2	1.3111 +.0005	1.2956 - .0005	1.2739 +.0003	.00015	8	.0125
1	7518304	1.3125-20UN-3A	1.2765	1	1.3130	1.2657 + .0005		.0003	15	.016
2	7518305	1.3125-20UN-3A	1.2765	2	1.3125 +.0005	1.2982 - .0005	1.2765 +.0003	.00015	8	.0125
1	7518306	1.3125-28UN-2A	1.2840	1	1.3113	1.2763 + .0005		.0003	15	.011
2	7518307	1.3125-28UN-2A	1.2840	2	1.3108 +.0005	1.2995 - .0005	1.2840 +.0003	.00015	8	.0089
1	7518308	1.3125-28UN-3A	1.2862	1	1.3130	1.2785 + .0005		.0003	15	.011
2	7518309	1.3125-28UN-3A	1.2862	2	1.3125 +.0005	1.3017 - .0005	1.2862 +.0003	.00015	8	.0089
1	5220-751-5808	1.3750-6UNC-1A	1.2523	1	1.3734	1.2162 + .0008		.0004	5	.052
2	5220-751-5809	1.3750-6UNC-1A	1.2523	2	1.3726 +.0008	1.3245 - .0008	1.2523 +.0004	.0003	5	.0417
1	5220-751-5810	1.3750-6UNC-2A	1.2563	1	1.3734	1.2202 + .0008		.0004	5	.052
2	5220-751-5811	1.3750-6UNC-2A	1.2563	2	1.3726 +.0008	1.3285 - .0008	1.2563 +.0004	.0003	5	.0417
1	5220-751-5812	1.3750-6UNC-3A	1.2607	1	1.3758	1.2246 + .0008		.0004	5	.052
2	5220-751-5813	1.3750-6UNC-3A	1.2607	2	1.3750 +.0008	1.3329 - .0008	1.2607 +.0004	.0003	5	.0417
1	5220-751-5814	1.3750-8UN-2A	1.2844	1	1.3735	1.2573 + .0007		.0004	5	.039
2	5220-751-5815	1.3750-8UN-2A	1.2844	2	1.3728 +.0007	1.3385 - .0007	1.2844 +.0004	.00025	5	.0312

* 1. LO (Not Go) Thread Ring Gage 2. Truncated Thread Setting Plug Gage

ORDBA Form 20-1578, (OT) 4 May 61

Downloaded from http://www.everyspec.com

Table I. Tabulation of Design and Identification Data - Unified Standard Thread (Continued)

FIG. NO.	MARKING ON GAGE HANDLE				GAGE DIMENSIONS					
	MIL-STD PART NUMBER	THREAD DESIGNATION	LO PD	1	MAJOR DIA	MINOR DIA	———	TOL ON LEAD	HALF ANGLE TOL	ROOT CLEAR
			LO PD	2	MAJOR DIA FULL PORTION	MAJOR DIA TRUNCATED PORTION	PITCH DIA			
A	B	C	D	*	E	F	G	H	J	K
1	5220-751-5816	1.3750-8UN-3A	1.2884	1	1.3757	1.2613 + .0007		.0004	5	.039
2	5220-751-5817	1.3750-8UN-3A	1.2884	2	1.3750 +.0007	1.3425 - .0007	1.2884 +.0004	.00025	5	.0312
1	5220-751-5818	1.3750-12UNF-1A	1.3096	1	1.3731	1.2916 + .0006		.0003	10	.026
2	5220-751-5819	1.3750-12UNF-1A	1.3096	2	1.3721 +.0006	1.3457 - .0006	1.3096 +.0003	.0002	6	.0208
1	5220-751-5820	1.3750-12UNF-2A	1.3127	1	1.3737	1.2947 + .0006		.0003	10	.026
2	5220-751-5821	1.3750-12UNF-2A	1.3127	2	1.3731 +.0006	1.3488 - .0006	1.3127 +.0003	.0002	6	.0208
1	5220-751-5822	1.3750-12UNF-3A	1.3162	1	1.3756	1.2982 + .0006		.0003	10	.026
2	5220-751-5823	1.3750-12UNF-3A	1.3162	2	1.3750 +.0006	1.3523 - .0006	1.3162 +.0003	.0002	6	.0208
1	5220-751-7026	1.3750-16UN-2A	1.3278	1	1.3741	1.3143 + .0006		.0003	10	.020
2	5220-751-7027	1.3750-16UN-2A	1.3278	2	1.3735 +.0006	1.3549 - .0006	1.3278 +.0003	.00015	8	.0156
1	5220-751-7028	1.3750-16UN-3A	1.3306	1	1.3756	1.3171 + .0006		.0003	10	.020
2	5220-751-7029	1.3750-16UN-3A	1.3306	2	1.3750 +.0006	1.3577 - .0006	1.3306 +.0003	.00015	8	.0156
1	5220-751-5824	1.3750-18UNEF-2A	1.3325	1	1.3740	1.3205 + .0005		.0003	10	.017
2	5220-751-5825	1.3750-18UNEF-2A	1.3325	2	1.3735 +.0005	1.3566 - .0005	1.3325 +.0003	.00015	8	.0139
1	5220-751-5826	1.3750-18UNEF-3A	1.3353	1	1.3755	1.3233 + .0005		.0003	10	.017
2	5220-751-5827	1.3750-18UNEF-3A	1.3353	2	1.3750 +.0005	1.3594 - .0005	1.3353 +.0003	.00015	8	.0139
1	7518310	1.3750-20UN-2A	1.3364	1	1.3741	1.3256 + .0005		.0003	15	.016
2	7518311	1.3750-20UN-2A	1.3364	2	1.3736 +.0005	1.3581 - .0005	1.3364 +.0003	.00015	8	.0125
1	7518312	1.3750-20UN-3A	1.3390	1	1.3755	1.3282 + .0005		.0003	15	.016
2	7518313	1.3750-20UN-3A	1.3390	2	1.3750 +.0005	1.3607 - .0005	1.3390 +.0003	.00015	8	.0125
1	7518314	1.3750-28UN-2A	1.3465	1	1.3738	1.3388 + .0005		.0003	15	.011
2	7518315	1.3750-28UN-2A	1.3465	2	1.3733 +.0005	1.3620 - .0005	1.3465 +.0003	.00015	8	.0089

* 1. LO (Not Go) Thread Ring Gage 2. Truncated Thread Setting Plug Gage

ORDBA Form 20-1578, (OT) 4 May 61

Downloaded from http://www.everyspec.com

Table I. Tabulation of Design and Identification Data - Unified Standard Thread (Continued)

FIG. NO.	MARKING ON GAGE HANDLE				GAGE DIMENSIONS					
	MIL-STD PART NUMBER	THREAD DESIGNATION	LO PD / LO PD	1 / 2	MAJOR DIA / MAJOR DIA FULL PORTION	MINOR DIA / MAJOR DIA TRUNCATED PORTION	PITCH DIA	TOL ON LEAD	HALF ANGLE TOL	ROOT CLEAR
A	B	C	D	*	E	F	G	H	J	K
1	7518316	1.3750-28UN-3A	1.3487	1	1.3755	1.3410 + .0005		.0003	15	.011
2	7518317	1.3750-28UN-3A	1.3487	2	1.3750 +.0005	1.3642 - .0005	1.3487 +.0003	.00015	8	.0089
1	7518318	1.4375-6UN-2A	1.3188	1	1.4359	1.2827 + .0008		.0004	5	.052
2	7518319	1.4375-6UN-2A	1.3188	2	1.4351 +.0008	1.3910 - .0008	1.3188 +.0004	.0003	5	.0417
1	7518320	1.4375-6UN-3A	1.3232	1	1.4383	1.2871 + .0008		.0004	5	.052
2	7518321	1.4375-6UN-3A	1.3232	2	1.4375 +.0008	1.3954 - .0008	1.3232 +.0004	.0003	5	.0417
1	7518322	1.4375-8UN-2A	1.3469	1	1.4360	1.3198 + .0007		.0004	5	.039
2	7518323	1.4375-8UN-2A	1.3469	2	1.4353 +.0007	1.4010 - .0007	1.3469 +.0004	.00025	5	.0312
1	7518324	1.4375-8UN-3A	1.3509	1	1.4382	1.3238 + .0007		.0004	5	.039
2	7518325	1.4375-8UN-3A	1.3509	2	1.4375 +.0007	1.4050 - .0007	1.3509 +.0004	.00025	5	.0312
1	5220-751-5828	1.4375-12UN-2A	1.3757	1	1.4363	1.3577 + .0006		.0003	10	.026
2	5220-751-5829	1.4375-12UN-2A	1.3757	2	1.4357 +.0006	1.4118 - .0006	1.3757 +.0003	.0002	6	.0208
1	5220-751-5830	1.4375-12UN-3A	1.3790	1	1.4381	1.3610 + .0006		.0003	10	.026
2	5220-751-5831	1.4375-12UN-3A	1.3790	2	1.4375 +.0006	1.4151 - .0006	1.3790 +.0003	.0002	6	.0208
1	5220-751-7030	1.4375-16UN-2A	1.3901	1	1.4365	1.3766 + .0006		.0003	10	.020
2	5220-751-7031	1.4375-16UN-2A	1.3901	2	1.4359 +.0006	1.4172 - .0006	1.3901 +.0003	.00015	8	.0156
1	5220-751-7032	1.4375-16UN-3A	1.3930	1	1.4381	1.3795 + .0006		.0003	10	.020
2	5220-751-7033	1.4375-16UN-3A	1.3930	2	1.4375 +.0006	1.4201 - .0006	1.3930 +.0003	.00015	8	.0156
1	5220-751-5832	1.4375-18UNEF-2A	1.3949	1	1.4365	1.3829 + .0005		.0003	10	.017
2	5220-751-5833	1.4375-18UNEF-2A	1.3949	2	1.4360 +.0005	1.4190 - .0005	1.3949 +.0003	.00015	8	.0139
1	5220-751-5834	1.4375-18UNEF-3A	1.3977	1	1.4380	1.3857 + .0005		.0003	10	.017
2	5220-751-5835	1.4375-18UNEF-3A	1.3977	2	1.4375 +.0005	1.4218 - .0005	1.3977 +.0003	.00015	8	.0139

* 1. LO (Not Go) Thread Ring Gage 2. Truncated Thread Setting Plug Gage

ORDBA Form 20-1578, (OT) 4 May 61

Downloaded from http://www.everyspec.com

Table I. Tabulation of Design and Identification Data - Unified Standard Thread (Continued)

FIG. NO.	MARKING ON GAGE HANDLE				GAGE DIMENSIONS					
	MIL-STD PART NUMBER	THREAD DESIGNATION	LO PD / LO PD	1 / 2	MAJOR DIA / MAJOR DIA FULL PORTION	MINOR DIA / MAJOR DIA TRUNCATED PORTION	PITCH DIA	TOL ON LEAD	HALF ANGLE TOL	ROOT CLEAR
A	B	C	D	*	E	F	G	H	J	K
1	7518326	1.4375-20UN-2A	1.3988	1	1.4366	1.3880 + .0005		.0003	15	.016
2	7518327	1.4375-20UN-2A	1.3988	2	1.4361 +.0005	1.4205 - .0005	1.3988 +.0003	.00015	8	.0125
1	7518328	1.4375-20UN-3A	1.4014	1	1.4382	1.3906 + .0005		.0003	15	.016
2	7518329	1.4375-20UN-3A	1.4014	2	1.4375 +.0005	1.4231 - .0005	1.4014 +.0003	.00015	8	.0125
1	7518330	1.4375-28UN-2A	1.4088	1	1.4361	1.4011 + .0005		.0003	15	.011
2	7518331	1.4375-28UN-2A	1.4088	2	1.4356 +.0005	1.4243 - .0005	1.4088 +.0003	.00015	8	.0089
1	7518332	1.4375-28UN-3A	1.4112	1	1.4382	1.4035 + .0005		.0003	15	.011
2	7518333	1.4375-28UN-3A	1.4112	2	1.4375 +.0005	1.4267 - .0005	1.4112 +.0003	.00015	8	.0089
1	5220-751-5836	1.5000-6UNC-1A	1.3772	1	1.4984	1.3411 + .0008		.0004	5	.052
2	5220-751-5837	1.5000-6UNC-1A	1.3772	2	1.4976 +.0008	1.4494 - .0008	1.3772 +.0004	.0003	5	.0417
1	5220-751-5838	1.5000-6UNC-2A	1.3812	1	1.4984	1.3451 + .0008		.0004	5	.052
2	5220-751-5839	1.5000-6UNC-2A	1.3812	2	1.4976 +.0008	1.4534 - .0008	1.3812 +.0004	.0003	5	.0417
1	5220-751-5840	1.5000-6UNC-3A	1.3856	1	1.5008	1.3495 + .0008		.0004	5	.052
2	5220-751-5841	1.5000-6UNC-3A	1.3856	2	1.5000 +.0008	1.4578 - .0008	1.3856 +.0004	.0003	5	.0417
1	5220-751-5842	1.5000-8UN-2A	1.4093	1	1.4985	1.3822 + .0007		.0004	5	.039
2	5220-751-5843	1.5000-8UN-2A	1.4093	2	1.4978 +.0007	1.4634 - .0007	1.4093 +.0004	.00025	5	.0312
1	5220-751-5844	1.5000-8UN-3A	1.4133	1	1.5007	1.3862 + .0007		.0004	5	.039
2	5220-751-5845	1.5000-8UN-3A	1.4133	2	1.5000 +.0007	1.4674 - .0007	1.4133 +.0004	.00025	5	.0312
1	5220-751-5846	1.5000-12UNF-1A	1.4344	1	1.4981	1.4164 + .0006		.0003	10	.026
2	5220-751-5847	1.5000-12UNF-1A	1.4344	2	1.4969 +.0006	1.4705 - .0006	1.4344 +.0003	.0002	6	.0208
1	5220-751-5848	1.5000-12UNF-2A	1.4376	1	1.4987	1.4196 + .0006		.0003	10	.026
2	5220-751-5849	1.5000-12UNF-2A	1.4376	2	1.4981 +.0006	1.4737 - .0006	1.4376 +.0003	.0002	6	.0208

* 1. LO (Not Go) Thread Ring Gage 2. Truncated Thread Setting Plug Gage

ORDBA Form 20-1578, (OT) 4 May 61

Downloaded from http://www.everyspec.com

Table I. Tabulation of Design and Identification Data - Unified Standard Thread (Continued)

FIG. NO.	MARKING ON GAGE HANDLE				GAGE DIMENSIONS					
	MIL-STD PART NUMBER	THREAD DESIGNATION	LO PD	1	MAJOR DIA	MINOR DIA		TOL ON LEAD	HALF ANGLE TOL	ROOT CLEAR
			LO PD	2	MAJOR DIA FULL PORTION	MAJOR DIA TRUNCATED PORTION	PITCH DIA			
A	B	C	D	*	E	F	G	H	J	K
1	5220-751-5850	1.5000-12UNF-3A	1.4411	1	1.5006	1.4231 + .0006		.0003	10	.026
2	5220-751-5851	1.5000-12UNF-3A	1.4411	2	1.5000 +.0006	1.4772 - .0006	1.4411 +.0003	.0002	6	.0208
1	5220-751-7034	1.5000-16UN-2A	1.4526	1	1.4990	1.4391 + .0006		.0003	10	.020
2	5220-751-7035	1.5000-16UN-2A	1.4526	2	1.4984 +.0006	1.4797 - .0006	1.4526 +.0003	.00015	8	.0156
1	5220-751-7036	1.5000-16UN-3A	1.4555	1	1.5006	1.4420 + .0006		.0003	10	.020
2	5220-751-7037	1.5000-16UN-3A	1.4555	2	1.5000 +.0006	1.4826 - .0006	1.4555 +.0003	.00015	8	.0156
1	5220-751-5852	1.5000-18UNEF-2A	1.4574	1	1.4990	1.4454 + .0005		.0003	10	.017
2	5220-751-5853	1.5000-18UNEF-2A	1.4574	2	1.4985 +.0005	1.4815 - .0005	1.4574 +.0003	.00015	8	.0139
1	5220-751-5854	1.5000-18UNEF-3A	1.4602	1	1.5005	1.4482 + .0005		.0003	10	.017
2	5220-751-5855	1.5000-18UNEF-3A	1.4602	2	1.5000 +.0005	1.4843 - .0005	1.4602 +.0003	.00015	8	.0139
1	7518334	1.5000-20UN-2A	1.4613	1	1.4991	1.4505 + .0005		.0003	15	.016
2	7518335	1.5000-20UN-2A	1.4613	2	1.4986 +.0005	1.4830 - .0005	1.4613 +.0003	.00015	8	.0125
1	7518336	1.5000-20UN-3A	1.4639	1	1.5005	1.4531 + .0005		.0003	15	.016
2	7518337	1.5000-20UN-3A	1.4639	2	1.5000 +.0005	1.4856 - .0005	1.4639 +.0003	.00015	8	.0125
1	7518338	1.5000-28UN-2A	1.4713	1	1.4986	1.4636 + .0005		.0003	15	.011
2	7518339	1.5000-28UN-2A	1.4713	2	1.4981 +.0005	1.4868 - .0005	1.4713 +.0003	.00015	8	.0089
1	7518340	1.5000-28UN-3A	1.4737	1	1.5005	1.4660 + .0005		.0003	15	.011
2	7518341	1.5000-28UN-3A	1.4737	2	1.5000 +.0005	1.4892 - .0005	1.4737 +.0003	.00015	8	.0089
1	7518342	1.5625-6UN-2A	1.4436	1	1.5609	1.4075 + .0008		.0004	5	.052
3	7518343	1.5625-6UN-2A	1.4436	2	1.5601 +.0008	1.5158 - .0008	1.4436 +.0005	.0003	5	.0417
1	7518344	1.5625-6UN-3A	1.4481	1	1.5633	1.4120 + .0008		.0004	5	.052
3	7518345	1.5625-6UN-3A	1.4481	2	1.5625 +.0008	1.5203 - .0008	1.4481 +.0005	.0003	5	.0417

* 1. LO (Not Go) Thread Ring Gage 2. Truncated Thread Setting Plug Gage

ORDBA Form 20-1578, (OT) 4 May 61

Downloaded from http://www.everyspec.com

Table I. Tabulation of Design and Identification Data - Unified Standard Thread (Continued)

FIG. NO.	MARKING ON GAGE HANDLE				GAGE DIMENSIONS					
	MIL-STD PART NUMBER	THREAD DESIGNATION	LO PD / LO PD	1 / 2	MAJOR DIA / MAJOR DIA FULL PORTION	MINOR DIA / MAJOR DIA TRUNCATED PORTION	PITCH DIA	TOL ON LEAD	HALF ANGLE TOL	ROOT CLEAR
A	B	C	D	*	E	F	G	H	J	K
1	7518346	1.5625-8UN-2A	1.4717	1	1.5610	1.4446 + .0007		.0004	5	.039
3	7518347	1.5625-8UN-2A	1.4717	2	1.5603 +.0007	1.5258 - .0007	1.4717 +.0005	.00025	5	.0312
1	7518348	1.5625-8UN-3A	1.4758	1	1.5632	1.4487 + .0007		.0004	5	.039
3	7518349	1.5625-8UN-3A	1.4758	2	1.5625 +.0007	1.5299 - .0007	1.4758 +.0005	.00025	5	.0312
1	7518350	1.5625-12UN-2A	1.5007	1	1.5613	1.4827 + .0006		.0003	10	.026
3	7518351	1.5625-12UN-2A	1.5007	2	1.5607 +.0006	1.5368 - .0006	1.5007 +.0004	.0002	6	.0208
1	7518352	1.5625-12UN-3A	1.5040	1	1.5631	1.4860 + .0006		.0003	10	.026
3	7518353	1.5625-12UN-3A	1.5040	2	1.5625 +.0006	1.5401 - .0006	1.5040 +.0004	.0002	6	.0208
1	5220-751-7038	1.5625-16UN-2A	1.5151	1	1.5615	1.5016 + .0006		.0003	10	.020
3	5220-751-7039	1.5625-16UN-2A	1.5151	2	1.5609 +.0006	1.5422 - .0006	1.5151 +.0004	.00015	8	.0156
1	5220-751-7040	1.5625-16UN-3A	1.5180	1	1.5631	1.5045 + .0006		.0003	10	.020
3	5220-751-7041	1.5625-16UN-3A	1.5180	2	1.5625 +.0006	1.5451 - .0006	1.5180 +.0004	.00015	8	.0156
1	5220-751-5856	1.5625-18UNEF-2A	1.5199	1	1.5615	1.5079 + .0005		.0003	10	.017
3	5220-751-5857	1.5625-18UNEF-2A	1.5199	2	1.5610 +.0005	1.5440 - .0005	1.5199 +.0004	.00015	8	.0139
1	5220-751-5858	1.5625-18UNEF-3A	1.5227	1	1.5630	1.5107 + .0005		.0003	10	.017
3	5220-751-5859	1.5625-18UNEF-3A	1.5227	2	1.5625 +.0005	1.5468 - .0005	1.5227 +.0004	.00015	8	.0139
1	7518354	1.5625-20UN-2A	1.5238	1	1.5616	1.5130 + .0005		.0003	15	.016
3	7518355	1.5625-20UN-2A	1.5238	2	1.5611 +.0005	1.5455 - .0005	1.5238 +.0004	.00015	8	.0125
1	7518356	1.5625-20UN-3A	1.5264	1	1.5630	1.5156 + .0005		.0003	15	.016
3	7518357	1.5625-20UN-3A	1.5264	2	1.5625 +.0005	1.5481 - .0005	1.5264 +.0004	.00015	8	.0125
1	7518358	1.6250-6UN-2A	1.5060	1	1.6233	1.4699 + .0008		.0004	5	.052
3	7518359	1.6250-6UN-2A	1.5060	2	1.6225 +.0008	1.5782 - .0008	1.5060 +.0005	.0003	5	.0417

* 1. LO (Not Go) Thread Ring Gage 2. Truncated Thread Setting Plug Gage

ORDBA Form 20-1578, (OT) 4 May 61

Downloaded from http://www.everyspec.com

Table I. Isbulstion of Design and Identification Data - Unified Standard Thread (Continued)

FIG. NO.	MARKING ON GAGE HANDLE				GAGE DIMENSIONS					
	MIL-STD PART NUMBER	THREAD DESIGNATION	LO PD / LO PD	1 / 2	MAJOR DIA / MAJOR DIA FULL PORTION	MINOR DIA / MAJOR DIA TRUNCATED PORTION	PITCH DIA	TOL ON LEAD	HALF ANGLE TOL	ROOT CLEAR
A	B	C	D	*	E	F	G	H	J	K
1	7518360	1.6250-6UN-3A	1.5105	1	1.6258	1.4744 + .0008		.0004	5	.052
3	7518361	1.6250-6UN-3A	1.5105	2	1.6250 +.0008	1.5827 - .0008	1.5105 +.0005	.0003	5	.0417
1	5220-751-5860	1.6250-8UN-2A	1.5342	1	1.6235	1.5071 + .0007		.0004	5	.039
3	5220-751-5861	1.6250-8UN-2A	1.5342	2	1.6228 +.0007	1.5883 - .0007	1.5342 +.0005	.00025	5	.0312
1	5220-751-5862	1.6250-8UN-3A	1.5382	1	1.6257	1.5111 + .0007		.0004	5	.039
3	5220-751-5863	1.6250-8UN-3A	1.5382	2	1.6250 +.0007	1.5923 - .0007	1.5382 +.0005	.00025	5	.0312
1	5220-751-5864	1.6250-12UN-2A	1.5632	1	1.6238	1.5452 + .0006		.0003	10	.026
3	5220-751-5865	1.6250-12UN-2A	1.5632	2	1.6232 +.0006	1.5993 - .0006	1.5632 +.0004	.0002	6	.0208
1	5220-751-5866	1.6250-12UN-3A	1.5665	1	1.6256	1.5485 + .0006		.0003	10	.026
3	5220-751-5867	1.6250-12UN-3A	1.5665	2	1.6250 +.0006	1.6026 - .0006	1.5665 +.0004	.0002	6	.0208
1	5220-751-7042	1.6250-16UN-2A	1.5776	1	1.6240	1.5641 + .0006		.0003	10	.020
3	5220-751-7043	1.6250-16UN-2A	1.5776	2	1.6234 +.0006	1.6047 - .0006	1.5776 +.0004	.00015	8	.0156
1	5220-751-7044	1.6250-16UN-3A	1.5805	1	1.6256	1.5670 + .0006		.0003	10	.020
3	5220-751-7045	1.6250-16UN-3A	1.5805	2	1.6250 +.0006	1.6076 - .0006	1.5805 +.0004	.00015	8	.0156
1	5220-751-5868	1.6250-18UNEF-2A	1.5824	1	1.6240	1.5704 + .0005		.0003	10	.017
3	5220-751-5869	1.6250-18UNEF-2A	1.5824	2	1.6235 +.0005	1.6065 - .0005	1.5824 +.0004	.00015	8	.0139
1	5220-751-5870	1.6250-18UNEF-3A	1.5852	1	1.6255	1.5732 + .0005		.0003	10	.017
3	5220-751-5871	1.6250-18UNEF-3A	1.5852	2	1.6250 +.0005	1.6093 - .0005	1.5852 +.0004	.00015	8	.0139
1	7518362	1.6250-20UN-2A	1.5863	1	1.6241	1.5755 + .0005		.0003	15	.016
3	7518363	1.6250-20UN-2A	1.5863	2	1.6236 +.0005	1.6080 - .0005	1.5863 +.0004	.00015	8	.0125
1	7518364	1.6250-20UN-3A	1.5889	1	1.6255	1.5781 + .0005		.0003	15	.016
3	7518365	1.6250-20UN-3A	1.5889	2	1.6250 +.0005	1.6106 - .0005	1.5889 +.0004	.00015	8	.0125

* 1. LO (Not Go) Thread Ring Gage 2. Truncated Thread Setting Plug Gage

ORDBA Form 20-1578, (OT) 4 May 61

Downloaded from http://www.everyspec.com

Table I. Tabulation of Design and Identification Data - Unified Standard Thread (Continued)

FIG. NO.	MARKING ON GAGE HANDLE				GAGE DIMENSIONS					
	MIL-STD PART NUMBER	THREAD DESIGNATION	LO PD / LO PD	1 / 2	MAJOR DIA / MAJOR DIA FULL PORTION	MINOR DIA / MAJOR DIA TRUNCATED PORTION	PITCH DIA	TOL ON LEAD	HALF ANGLE TOL	ROOT CLEAR
A	B	C	D	*	E	F	G	H	J	K
1	7518366	1.6875-6UN-2A	1.5684	1	1.6858	1.5323 + .0008		.0004	5	.052
3	7518367	1.6875-6UN-2A	1.5684	2	1.6850 +.0008	1.6406 - .0008	1.5684 +.0005	.0003	5	.0417
1	7518368	1.6875-6UN-3A	1.5730	1	1.6883	1.5369 + .0008		.0004	5	.052
3	7518369	1.6875-6UN-3A	1.5730	2	1.6875 +.0008	1.6452 - .0008	1.5730 +.0005	.0003	5	.0417
1	7518370	1.6875-8UN-2A	1.5966	1	1.6860	1.5695 + .0007		.0004	5	.039
3	7518371	1.6875-8UN-2A	1.5966	2	1.6853 +.0007	1.6507 - .0007	1.5966 +.0005	.00025	5	.0312
1	7518372	1.6875-8UN-3A	1.6007	1	1.6882	1.5736 + .0007		.0004	5	.039
3	7518373	1.6875-8UN-3A	1.6007	2	1.6875 +.0007	1.6548 - .0007	1.6007 +.0005	.00025	5	.0312
1	7518374	1.6875-12UN-2A	1.6256	1	1.6863	1.6076 + .0006		.0003	10	.026
3	7518375	1.6875-12UN-2A	1.6256	2	1.6857 +.0006	1.6617 - .0006	1.6256 +.0004	.0002	6	.0208
1	7518376	1.6875-12UN-3A	1.6289	1	1.6881	1.6109 + .0006		.0003	10	.026
3	7518377	1.6875-12UN-3A	1.6289	2	1.6875 +.0006	1.6650 - .0006	1.6289 +.0004	.0002	6	.0208
1	5220-751-7046	1.6875-16UN-2A	1.6400	1	1.6865	1.6265 + .0006		.0003	10	.020
3	5220-751-7047	1.6875-16UN-2A	1.6400	2	1.6859 +.0006	1.6671 - .0006	1.6400 +.0004	.00015	8	.0156
1	5220-751-7048	1.6875-16UN-3A	1.6429	1	1.6881	1.6294 + .0006		.0003	10	.020
3	5220-751-7049	1.6875-16UN-3A	1.6429	2	1.6875 +.0006	1.6700 - .0006	1.6429 +.0004	.00015	8	.0156
1	5220-751-5872	1.6875-18UNEF-2A	1.6448	1	1.6865	1.6328 + .0005		.0003	10	.017
3	5220-751-5873	1.6875-18UNEF-2A	1.6448	2	1.6860 +.0005	1.6689 - .0005	1.6448 +.0004	.00015	8	.0139
1	5220-751-5874	1.6875-18UNEF-3A	1.6476	1	1.6880	1.6356 + .0005		.0003	10	.017
3	5220-751-5875	1.6875-18UNEF-3A	1.6476	2	1.6875 +.0005	1.6717 - .0005	1.6476 +.0004	.00015	8	.0139
1	7518378	1.6875-20UN-2A	1.6487	1	1.6865	1.6379 + .0005		.0003	15	.016
3	7518379	1.6875-20UN-2A	1.6487	2	1.6860 +.0005	1.6704 - .0005	1.6487 +.0004	.00015	8	.0125

* 1. LO (Not Go) Thread Ring Gage 2. Truncated Thread Setting Plug Gage

ORDBA Form 20-1578, (OT) 4 May 61

Downloaded from http://www.everyspec.com

Table I. Tabulation of Design and Identification Data - Unified Standard Thread (Continued)

FIG. NO.	MARKING ON GAGE HANDLE				GAGE DIMENSIONS					
	MIL-STD PART NUMBER	THREAD DESIGNATION	LO PD	1	MAJOR DIA	MINOR DIA	———	TOL ON LEAD	HALF ANGLE TOL	ROOT CLEAR
			LO PD	2	MAJOR DIA FULL PORTION	MAJOR DIA TRUNCATED PORTION	PITCH DIA			
A	B	C	D	*	E	F	G	H	J	K
1	7518380	1.6875-20UN-3A	1.6514	1	1.6880	1.6406 + .0005		.0003	15	.016
3	7518381	1.6875-20UN-3A	1.6514	2	1.6875 +.0005	1.6731 - .0005	1.6514 +.0004	.00015	8	.0125
1	5220-751-5876	1.7500-5UNC-1A	1.6040	1	1.7481	1.5607 + .0008		.0004	5	.062
3	5220-751-5877	1.7500-5UNC-1A	1.6040	2	1.7473 +.0008	1.6906 - .0008	1.6040 +.0005	.0003	4	.0500
1	5220-751-5878	1.7500-5UNC-2A	1.6085	1	1.7481	1.5652 + .0008		.0004	5	.062
3	5220-751-5879	1.7500-5UNC-2A	1.6085	2	1.7473 +.0008	1.6951 - .0008	1.6085 +.0005	.0003	4	.0500
1	5220-751-5880	1.7500-5UNC-3A	1.6134	1	1.7508	1.5701 + .0008		.0004	5	.062
3	5220-751-5881	1.7500-5UNC-3A	1.6134	2	1.7500 +.0008	1.7000 - .0008	1.6134 +.0005	.0003	4	.0500
1	7518382	1.7500-6UN-2A	1.6309	1	1.7483	1.5948 + .0008		.0004	5	.052
3	7518383	1.7500-6UN-2A	1.6309	2	1.7475 +.0008	1.7031 - .0008	1.6309 + .0005	.0003	5	.0417
1	7518384	1.7500-6UN-3A	1.6354	1	1.7508	1.5993 + .0008		.0004	5	.052
3	7518385	1.7500-6UN-3A	1.6354	2	1.7500 +.0008	1.7076 - .0008	1.6354 +.0005	.0003	5	.0417
1	5220-751-5882	1.7500-8UN-2A	1.6590	1	1.7484	1.6319 + .0007		.0004	5	.039
3	5220-751-5883	1.7500-8UN-2A	1.6590	2	1.7477 +.0007	1.7131 - .0007	1.6590 +.0005	.00025	5	.0312
1	5220-751-5884	1.7500-8UN-3A	1.6632	1	1.7507	1.6361 + .0007		.0004	5	.039
3	5220-751-5885	1.7500-8UN-3A	1.6632	2	1.7500 +.0007	1.7173 - .0007	1.6632 +.0005	.00025	5	.0312
1	5220-751-5886	1.7500-12UN-2A	1.6881	1	1.7488	1.6701 + .0006		.0003	10	.026
3	5220-751-5887	1.7500-12UN-2A	1.6881	2	1.7482 +.0006	1.7242 - .0006	1.6881 +.0004	.0002	6	.0208
1	5220-751-5888	1.7500-12UN-3A	1.6914	1	1.7506	1.6734 + .0006		.0003	10	.026
3	5220-751-5889	1.7500-12UN-3A	1.6914	2	1.7500 +.0006	1.7275 - .0006	1.6914 +.0004	.0002	6	.0208
1	5220-751-5890	1.7500-16UN-2A	1.7025	1	1.7490	1.6890 + .0006		.0003	10	.020
3	5220-751-5891	1.7500-16UN-2A	1.7025	2	1.7484 +.0006	1.7296 - .0006	1.7025 +.0004	.00015	8	0156

* 1. LO (Not Go) Thread Ring Gage 2. Truncated Thread Setting Plug Gage

ORDBA Form 30-1578, (OT) 4 May 61

Downloaded from http://www.everyspec.com

Table I. Tabulation of Design and Identification Data - Unified Standard Thread (Continued)

FIG. NO.	MARKING ON GAGE HANDLE				GAGE DIMENSIONS					
	MIL-STD PART NUMBER	THREAD DESIGNATION	LO PD / LO PD	1 / 2	MAJOR DIA / MAJOR DIA FULL PORTION	MINOR DIA / MAJOR DIA TRUNCATED PORTION	PITCH DIA	TOL ON LEAD	HALF ANGLE TOL	ROOT CLEAR
A	B	C	D	*	E	F	G	H	J	K
1	5220-751-5892	1.7500-16UN-3A	1.7054	1	1.7506	1.6919 + .0006		.0003	10	.020
3	5220-751-5893	1.7500-16UN-3A	1.7054	2	1.7500 +.0006	1.7325 - .0006	1.7054 +.0004	.00015	8	.0156
1	7518386	1.7500-20UN-2A	1.7112	1	1.7490	1.7004 + .0005		.0003	15	.016
3	7518387	1.7500-20UN-2A	1.7112	2	1.7485 +.0005	1.7329 - .0005	1.7112 +.0004	.00015	8	.0125
1	7518388	1.7500-20UN-[illegible]	1.7139	1	1.7505	1.7031 + .0005		.0003	15	.016
3	7518389	1.7500-20UN-3A	1.7139	2	1.7500 +.0005	1.7356 - .0005	1.7139 +.0004	.00015	8	.0125
1	7518390	1.8125-6UN-2A	1.6933	1	1.8108	1.6572 + .0008		.0004	5	.052
3	7518391	1.8125-6UN-2A	1.6933	2	1.8100 +.0008	1.7655 - .0008	1.6933 +.0005	.0003	5	.0417
1	7518392	1.8125-6UN-3A	1.6979	1	1.8133	1.6618 + .0008		.0004	5	.052
3	7518393	1.8125-6UN-3A	1.6979	2	1.8125 +.0008	1.7701 - .0008	1.6979 +.0005	.0003	5	.0417
1	7518394	1.8125-8UN-2A	1.7214	1	1.8109	1.6943 + .0007		.0004	5	.039
3	7518395	1.8125-8UN-2A	1.7214	2	1.8102 +.0007	1.7755 - .0007	1.7214 +.0005	.00025	5	.0312
1	7518396	1.8125-8UN-3A	1.7256	1	1.8132	1.6985 + .0007		.0004	5	.039
3	7518397	1.8125-8UN-3A	1.7256	2	1.8125 +.0007	1.7797 - .0007	1.7256 +.0005	.00025	5	.0312
1	7518398	1.8125-12UN-2A	1.7506	1	1.8113	1.7326 + .0006		.0003	10	.026
3	7518399	1.8125-12UN-2A	1.7506	2	1.8107 +.0006	1.7867 - .0006	1.7506 +.0004	.0002	6	.0208
1	7518400	1.8125-12UN-3A	1.7539	1	1.8131	1.7359 + .0006		.0003	10	.026
3	7518401	1.8125-12UN-3A	1.7539	2	1.8125 +.0006	1.7900 - .0006	1.7539 +.0004	.0002	6	.0208
1	5220-751-5894	1.8125-16UN-2A	1.7650	1	1.8115	1.7515 + .0006		.0003	10	020
3	5220-751-5895	1.8125-16UN-2A	1.7650	2	1.8109 +.0006	1.7921 - .0006	1.7650 +.0004	.00015	8	.0156
1	5220-751-5896	1.8125-16UN-3A	1.7679	1	1.8131	1.7544 + .0006		.0003	10	.020
3	5220-751-5897	1.8125-16UN-3A	1.7679	2	1.8125 +.0006	1.7950 - .0006	1.7679 +.0004	.00015	8	.0156

* 1. LO (Not Go) Thread Ring Gage 2. Truncated Thread Setting Plug Gage

ORDBA Form 20-1578, (OT) 4 May 61

Downloaded from http://www.everyspec.com

Table I. Tabulation of Design and Identification Data - Unified Standard Thread (Continued)

FIG. NO.	MARKING ON GAGE HANDLE				GAGE DIMENSIONS					
	MIL-STD PART NUMBER	THREAD DESIGNATION	LO PD / LO PD	1 / 2	MAJOR DIA / MAJOR DIA FULL PORTION	MINOR DIA / MAJOR DIA TRUNCATED PORTION	——— / PITCH DIA	TOL ON LEAD	HALF ANGLE TOL	ROOT CLEAR
A	B	C	D	*	E	F	G	H	J	K
1	7518402	1.8125-20UN-2A	1.7737	1	1.8115	1.7629 + .0005		.0003	15	.016
3	7518403	1.8125-20UN-2A	1.7737	2	1.8110 +.0005	1.7954 - .0005	1.7737 +.0004	.00015	8	.0125
1	7518404	1.8125-20UN-3A	1.7764	1	1.8130	1.7656 + .0005		.0003	15	.016
3	7518405	1.8125-20UN-3A	1.7764	2	1.8125 +.0005	1.7981 - .0005	1.7764 +.0004	.00015	8	.0125
1	7518406	1.8750-6UN-2A	1.7558	1	1.8733	1.7197 + .0008		.0004	5	.052
3	7518407	1.8750-6UN-2A	1.7558	2	1.8725 +.0008	1.8280 - .0008	1.7558 +.0005	.0003	5	.0417
1	7518408	1.8750-6UN-3A	1.7604	1	1.8758	1.7243 + .0008		.0004	5	.052
3	7518409	1.8750-6UN-3A	1.7604	2	1.8750 +.0008	1.8326 - .0008	1.7604 +.0005	.0003	5	.0417
1	5220-751-5898	1.8750-8UN-2A	1.7838	1	1.8734	1.7567 + .0007		.0004	5	.039
3	5220-751-5899	1.8750-8UN-2A	1.7838	2	1.8727 +.0007	1.8379 - .0007	1.7838 +.0005	.00025	5	.0312
1	5220-751-5900	1.8750-8UN-3A	1.7881	1	1.8757	1.7610 + .0007		.0004	5	.039
3	5220-751-5901	1.8750-8UN-3A	1.7881	2	1.8750 +.0007	1.8422 - .0007	1.7881 +.0005	.00025	5	.0312
1	5220-751-5902	1.8750-12UN-2A	1.8131	1	1.8738	1.7951 + .0006		.0003	10	.026
3	5220-751-5903	1.8750-12UN-2A	1.8131	2	1.8732 +.0006	1.8492 - .0006	1.8131 +.0004	.0002	6	.0208
1	5220-751-5904	1.8750-12UN-3A	1.8164	1	1.8756	1.7984 + .0006		.0003	10	.026
3	5220-751-5905	1.8750-12UN-3A	1.8164	2	1.8750 +.0006	1.8525 - .0006	1.8164 +.0004	.0002	6	.0208
1	5220-751-5906	1.8750-16UN-2A	1.8275	1	1.8740	1.8140 + .0006		.0003	10	.020
3	5220-751-5907	1.8750-16UN-2A	1.8275	2	1.8734 +.0006	1.8546 - .0006	1.8275 +.0004	.00015	8	.0156
1	5220-751-5908	1.8750-16UN-3A	1.8304	1	1.8756	1.8169 + .0006		.0003	10	.020
3	5220-751-5909	1.8750-16UN-3A	1.8304	2	1.8750 +.0006	1.8575 - .0006	1.8304 +.0004	.00015	8	.0156
1	7518410	1.8750-20UN-2A	1.8362	1	1.8740	1.8254 + .0005		.0003	15	.016
3	7518411	1.8750-20UN-2A	1.8362	2	1.8735 +.0005	1.8579 - .0005	1.8362 +.0004	.00015	8	.0125

* 1. LO (Not Go) Thread Ring Gage 2. Truncated Thread Setting Plug Gage

ORDBA Form 20-1578, (OT) 4 May 61

Downloaded from http://www.everyspec.com

Table I. Tabulation of Design and Identification Data - Unified Standard Thread (Continued)

FIG. NO.	MARKING ON GAGE HANDLE				GAGE DIMENSIONS					
	MIL-STD PART NUMBER	THREAD DESIGNATION	LO PD / LO PD	1 / 2	MAJOR DIA / MAJOR DIA FULL PORTION	MINOR DIA / MAJOR DIA TRUNCATED PORTION	PITCH DIA	TOL ON LEAD	HALF ANGLE TOL	ROOT CLEAR
A	B	C	D	*	E	F	G	H	J	K
1	7518412	1.8750-20UN-3A	1.8389	1	1.8755	1.8281 + .0005		.0003	15	.016
3	7518413	1.8750-20UN-3A	1.8389	2	1.8750 +.0005	1.8606 - .0005	1.8389 +.0004	.00015	8	.0125
1	7518414	1.9375-6UN-2A	1.8181	1	1.9357	1.7820 + .0008		.0004	5	.052
3	7518415	1.9375-6UN-2A	1.8181	2	1.9349 +.0008	1.8903 - .0008	1.8181 +.0005	.0003	5	.0417
1	7518416	1.9375-6UN-3A	1.8228	1	1.9383	1.7867 + .0008		.0004	5	.052
3	7518417	1.9375-6UN-3A	1.8228	2	1.9375 +.0008	1.8950 - .0008	1.8228 +.0005	.0003	5	.0417
1	7518418	1.9375-8UN-2A	1.8463	1	1.9359	1.8192 + .0007		.0004	5	.039
3	7518419	1.9375-8UN-2A	1.8463	2	1.9352 +.0007	1.9004 - .0007	1.8463 +.0005	.00025	5	.0312
1	7518420	1.9375-8UN-3A	1.8505	1	1.9382	1.8234 + .0007		.0004	5	.039
3	7518421	1.9375-8UN-3A	1.8505	2	1.9375 +.0007	1.9046 - .0007	1.8505 +.0005	.00025	5	.0312
1	7518422	1.9375-12UN-2A	1.8755	1	1.9363	1.8575 + .0006		.0003	10	.026
3	7518423	1.9375-12UN-2A	1.8755	2	1.9357 +.0006	1.9116 - .0006	1.8755 +.0004	.0002	6	.0208
1	7518424	1.9375-12UN-3A	1.8789	1	1.9381	1.8609 + .0006		.0003	10	.026
3	7518425	1.9375-12UN-3A	1.8789	2	1.9375 +.0006	1.9150 - .0006	1.8789 +.0004	.0002	6	.0208
1	5220-751-5910	1.9375-16UN-2A	1.8899	1	1.9365	1.8764 + .0006		.0003	10	.020
3	5220-751-5911	1.9375-16UN-2A	1.8899	2	1.9359 +.0006	1.9170 - .0006	1.8899 +.0004	.00015	8	.0156
1	5220-751-5912	1.9375-16UN-3A	1.8929	1	1.9381	1.8794 + .0006		.0003	10	.020
3	5220-751-5913	1.9375-16UN-3A	1.8929	2	1.9375 +.0006	1.9200 - .0006	1.8929 +.0004	.00015	8	.0156
1	7518426	1.9375-20UN-2A	1.8986	1	1.9365	1.8878 + .0005		.0003	15	.016
3	7518427	1.9375-20UN-2A	1.8986	2	1.9360 +.0005	1.9203 - .0005	1.8986 +.0004	.00015	8	.0125
1	7518428	1.9375-20UN-3A	1.9013	1	1.9380	1.8905 + .0005		.0003	15	.016
3	7518429	1.9375-20UN-3A	1.9013	2	1.9375 +.0005	1.9230 - .0005	1.9013 +.0004	.00015	8	.0125

* 1. LO (Not Go) Thread Ring Gage 2. Truncated Thread Setting Plug Gage

ORDBA Form 20-1578, (OT) 4 May 61

Downloaded from http://www.everyspec.com

Table I. Tabulation of Design and Identification Data - Unified Standard Thread (Continued)

FIG. NO.	MARKING ON GAGE HANDLE				GAGE DIMENSIONS					
	MIL-STD PART NUMBER	THREAD DESIGNATION	LO PD / LO PD	1 / 2	MAJOR DIA / MAJOR DIA FULL PORTION	MINOR DIA / MAJOR DIA TRUNCATED PORTION	PITCH DIA	TOL ON LEAD	HALF ANGLE TOL	ROOT CLEAR
A	B	C	D	*	E	F	G	H	J	K
1	5220-751-5914	2.0000-4½UNC-1A	1.8385	1	1.9979	1.7904 + .0008		.0004	5	.069
3	5220-751-5915	2.0000-4½UNC-1A	1.8385	2	1.9971 +.0008	1.9347 - .0008	1.8385 +.0005	.0003	4	.0556
1	5220-751-5916	2.0000-4½UNC-2A	1.8433	1	1.9979	1.7952 + .0008		.0004	5	.069
3	5220-751-5917	2.0000-4½UNC-2A	1.8433	2	1.9971 +.0008	1.9395 - .0008	1.8433 +.0005	.0003	4	.0556
1	5220-751-5918	2.0000-4½UNC-3A	1.8486	1	2.0008	1.8005 + .0008		.0004	5	.069
3	5220-751-5919	2.0000-4½UNC-3A	1.8486	2	2.0000 +.0008	1.9448 - .0008	1.8486 +.0005	.0003	4	.0556
1	7518430	2.0000-6UN-2A	1.8805	1	1.9982	1.8444 + .0008		.0004	5	.052
3	7518431	2.0000-6UN-2A	1.8805	2	1.9974 +.0008	1.9527 - .0008	1.8805 +.0005	.0003	5	.0417
1	7518432	2.0000-6UN-3A	1.8853	1	2.0008	1.8492 + .0008		.0004	5	.052
3	7518433	2.0000-6UN-3A	1.8853	2	2.0000 +.0008	1.9575 - .0008	1.8853 +.0005	.0003	5	.0417
1	5220-751-5920	2.0000-8UN-2A	1.9087	1	1.9984	1.8816 + .0007		.0004	5	.039
3	5220-751-5921	2.0000-8UN-2A	1.9087	2	1.9977 +.0007	1.9628 - .0007	1.9087 +.0005	.00025	5	.0312
1	5220-751-5922	2.0000-8UN-3A	1.9130	1	2.0007	1.8859 + .0007		.0004	5	.039
3	5220-751-5923	2.0000-8UN-3A	1.9130	2	2.0000 +.0007	1.9671 - .0007	1.9130 +.0005	.00025	5	.0312
1	5220-751-5924	2.0000-12UN-2A	1.9380	1	1.9988	1.9200 + .0006		.0003	10	.026
3	5220-751-5925	2.0000-12UN-2A	1.9380	2	1.9982 +.0006	1.9741 - .0006	1.9380 +.0004	.0002	6	.0208
1	5220-751-5926	2.0000-12UN-3A	1.9414	1	2.0006	1.9234 + .0006		.0003	10	.026
3	5220-751-5927	2.0000-12UN-3A	1.9414	2	2.0000 +.0006	1.9775 - .0006	1.9414 +.0004	.0002	6	.0208
1	5220-751-5928	2.0000-16UN-2A	1.9524	1	1.9990	1.9389 + .0006		.0003	10	.020
3	5220-751-5929	2.0000-16UN-2A	1.9524	2	1.9984 +.0006	1.9795 - .0006	1.9524 +.0004	.00015	8	.0156
1	5220-751-5930	2.0000-16UN-3A	1.9554	1	2.0006	1.9419 + .0006		.0003	10	.020
3	5220-751-5931	2.0000-16UN-3A	1.9554	2	2.0000 +.0006	1.9825 - .0006	1.9554 +.0004	.00015	8	.0156

* 1. LO (Not Go) Thread Ring Gage 2. Truncated Thread Setting Plug Gage

ORDBA Form 20-1578, (OT) 4 May 61

Downloaded from http://www.everyspec.com

Table I. Tabulation of Design and Identification Data - Unified Standard Thread (Continued)

FIG. NO.	MARKING ON GAGE HANDLE				GAGE DIMENSIONS					
	MIL-STD PART NUMBER	THREAD DESIGNATION	LO PD / LO PD	1 / 2	MAJOR DIA / MAJOR DIA FULL PORTION	MINOR DIA / MAJOR DIA TRUNCATED PORTION	PITCH DIA	TOL ON LEAD	HALF ANGLE TOL	ROOT CLEAR
A	B	C	D	*	E	F	G	H	J	K
1	7518434	2.0000-20UN-2A	1.9611	1	1.9990	1.9503 + .0005		.0003	15	.016
3	7518435	2.0000-20UN-2A	1.9611	2	1.9985 +.0005	1.9828 - .0005	1.9611 +.0004	.00015	8	.0125
1	7518436	2.0000-20UN-3A	1.9638	1	2.0005	1.9530 + .0005		.0003	15	.016
3	7518437	2.0000-20UN-3A	1.9638	2	2.0000 +.0005	1.9855 - .0005	1.9638 +.0004	.00015	8	.0125
1	7518438	2.1250-6UN-2A	2.0054	1	2.1232	1.9693 + .0008		.0004	5	.052
3	7518439	2.1250-6UN-2A	2.0054	2	2.1224 +.0008	2.0776 - .0008	2.0054 +.0005	.0003	5	.0417
1	7518440	2.1250-6UN-3A	2.0102	1	2.1258	1.9741 + .0008		.0004	5	.052
3	7518441	2.1250-6UN-3A	2.0102	2	2.1250 +.0008	2.0824 - .0008	2.0102 +.0005	.0003	5	.0417
1	5220-751-5936	2.1250-8UN-2A	2.0335	1	2.1233	2.0064 + .0007		.0004	5	.039
3	5220-751-5937	2.1250-8UN-2A	2.0335	2	2.1226 +.0007	2.0876 - .0007	2.0335 +.0005	.00025	5	.0312
1	5220-751-5938	2.1250-8UN-3A	2.0379	1	2.1257	2.0108 + .0007		.0004	5	.039
3	5220-751-5939	2.1250-8UN-3A	2.0379	2	2.1250 +.0007	2.0920 - .0007	2.0379 +.0005	.00025	5	.0312
1	5220-751-5940	2.1250-12UN-2A	2.0630	1	2.1238	2.0450 + .0006		.0003	10	.026
3	5220-751-5941	2.1250-12UN-2A	2.0630	2	2.1232 +.0006	2.0991 - .0006	2.0630 +.0004	.0002	6	.0208
1	5220-751-5942	2.1250-12UN-3A	2.0664	1	2.1256	2.0484 + .0006		.0003	10	.026
3	5220-751-5943	2.1250-12UN-3A	2.0664	2	2.1250 +.0006	2.1025 - .0006	2.0664 +.0004	.0002	6	.0208
1	5220-751-5944	2.1250-16UN-2A	2.0774	1	2.1240	2.0639 + .0006		.0003	10	.020
3	5220-751-5945	2.1250-16UN-2A	2.0774	2	2.1234 +.0006	2.1045 - .0006	2.0774 +.0004	.00015	8	.0156
1	5220-751-5946	2.1250-16UN-3A	2.0803	1	2.1256	2.0668 + .0006		.0003	10	.020
3	5220-751-5947	2.1250-16UN-3A	2.0803	2	2.1250 +.0006	2.1075 - .0006	2.0803 +.0004	.00015	8	.0156
1	7518442	2.1250-20UN-2A	2.0861	1	2.1240	2.0753 + .0005		.0003	15	.016
3	7518443	2.1250-20UN-2A	2.0861	2	2.1235 +.0005	2.1078 - .0005	2.0861 +.0004	.00015	8	.0125

* 1. LO (Not Go) Thread Ring Gage 2. Truncated Thread Setting Plug Gage

ORDBA Form 20-1578, (OT) 4 May 61

Downloaded from http://www.everyspec.com

Table I. Isolation of Design and Identification Data - Unified Standard Thread (Continued)

FIG. NO.	MARKING ON GAGE HANDLE				GAGE DIMENSIONS					
	MIL-STD PART NUMBER	THREAD DESIGNATION	LO PD / LO PD	1 / 2	MAJOR DIA / MAJOR DIA FULL PORTION	MINOR DIA / MAJOR DIA TRUNCATED PORTION	PITCH DIA	TOL ON LEAD	HALF ANGLE TOL	ROOT CLEAR
A	B	C	D	*	E	F	G	H	J	K
1	7518444	2.1250-20UN-3A	2.0888	1	2.1255	2.0780 + .0005		.0003	15	.016
3	7518445	2.1250-20UN-3A	2.0888	2	2.1250 +.0005	2.1105 - .0005	2.0888 +.0004	.00015	8	.0125
1	5220-751-5952	2.2500-4½UNC-1A	2.0882	1	2.2479	2.0401 + .0008		.0004	5	.069
3	5220-751-5953	2.2500-4½UNC-1A	2.0882	2	2.2471 +.0008	2.1844 - .0008	2.0882 +.0005	.0003	4	.0556
1	5220-751-5954	2.2500-4½UNC-2A	2.0931	1	2.2479	2.0450 + .0008		.0004	5	.069
3	5220-751-5955	2.2500-4½UNC-2A	2.0931	2	2.2471 +.0008	2.1893 - .0008	2.0931 +.0005	.0003	4	.0556
1	5220-751-5956	2.2500-4½UNC-3A	2.0984	1	2.2508	2.0503 + .0008		.0004	5	.069
3	5220-751-5957	2.2500-4½UNC-3A	2.0984	2	2.2500 +.0008	2.1946 - .0008	2.0984 +.0005	.0003	4	.0556
1	7518446	2.2500-6UN-2A	2.1303	1	2.2482	2.0942 + .0008		.0004	5	.052
3	7518447	2.2500-6UN-2A	2.1303	2	2.2474 +.0008	2.2025 - .0008	2.1303 +.0005	.0003	5	.0417
1	7518448	2.2500-6UN-3A	2.1351	1	2.2508	2.0990 + .0008		.0004	5	.052
3	7518449	2.2500-6UN-3A	2.1351	2	2.2500 +.0008	2.2073 - .0008	2.1351 +.0005	.0003	5	.0417
1	5220-751-5958	2.2500-8UN-2A	2.1584	1	2.2483	2.1313 + .0007		.0004	5	.039
3	5220-751-5959	2.2500-8UN-2A	2.1584	2	2.2476 +.0007	2.2125 - .0007	2.1584 +.0005	.00025	5	.0312
1	5220-751-5960	2.2500-8UN-3A	2.1628	1	2.2507	2.1357 + .0007		.0004	5	.039
3	5220-751-5961	2.2500-8UN-3A	2.1628	2	2.2500 +.0007	2.2169 - .0007	2.1628 +.0005	.00025	5	.0312
1	5220-751-5962	2.2500-12UN-2A	2.1880	1	2.2488	2.1700 + .0006		.0003	10	.026
3	5220-751-5963	2.2500-12UN-2A	2.1880	2	2.2482 +.0006	2.2241 - .0006	2.1880 +.0004	.0002	6	.0208
1	5220-751-5964	2.2500-12UN-3A	2.1914	1	2.2506	2.1734 + .0006		.0003	10	.026
3	5220-751-5965	2.2500-12UN-3A	2.1914	2	2.2500 +.0006	2.2275 - .0006	2.1914 +.0004	.0002	6	.0208
1	5220-751-5966	2.2500-16UN-2A	2.2024	1	2.2490	2.1889 + .0006		.0003	10	.020
3	5220-751-5967	2.2500-16UN-2A	2.2024	2	2.2484 +.0006	2.2295 - .0006	2.2024 +.0004	.00015	8	.0156

* 1. LO (Not Go) Thread Ring Gage 2. Truncated Thread Setting Plug Gage

ORDBA Form 20-157B, (OT) 4 May 61

Downloaded from http://www.everyspec.com

Table I. Tabulation of Design and Identification Data - Unified Standard Thread (Continued)

FIG. NO.	MARKING ON GAGE HANDLE				GAGE DIMENSIONS					
	MIL-STD PART NUMBER	THREAD DESIGNATION	LO PD	1	MAJOR DIA	MINOR DIA		TOL ON LEAD	HALF ANGLE TOL	ROOT CLEAR
			LO PD	2	MAJOR DIA FULL PORTION	MAJOR DIA TRUNCATED PORTION	PITCH DIA			
A	B	C	D	*	E	F	G	H	J	K
1	5220-751-5968	2.2500-16UN-3A	2.2053	1	2.2506	2.1918 + .0006		.0003	10	.020
3	5220-751-5969	2.2500-16UN-3A	2.2053	2	2.2500 +.0006	2.2325 - .0006	2.2055 +.0004	.00015	8	.0156
1	7518450	2.2500-20UN-2A	2.2111	1	2.2490	2.2003 + .0005		.0003	15	.016
3	7518451	2.2500-20UN-2A	2.2111	2	2.2485 +.0005	2.2328 - .0005	2.2111 +.0004	.00015	8	.0125
1	7518452	2.2500-20UN-3A	2.2137	1	2.2505	2.2029 + .0005		.0003	15	.016
3	7518453	2.2500-20UN-3A	2.2137	2	2.2500 +.0005	2.2354 - .0005	2.2137 +.0004	.00015	8	.0125
1	7518454	2.3750-6UN-2A	2.2551	1	2.3731	2.2190 + .0008		.0004	5	.052
3	7518455	2.3750-6UN-2A	2.2551	2	2.3723 +.0008	2.3273 - .0008	2.2551 +.0005	.0003	5	.0417
1	7518456	2.3750-6UN-3A	2.2601	1	2.3758	2.2240 + .0008		.0004	5	.052
3	7518457	2.3750-6UN-3A	2.2601	2	2.3750 +.0008	2.3323 - .0008	2.2601 +.0005	.0003	5	.0417
1	7518458	2.3750-8UN-2A	2.2833	1	2.3733	2.2562 + .0007		.0004	5	.039
3	7518459	2.3750-8UN-2A	2.2833	2	2.3726 +.0007	2.3374 - .0007	2.2833 +.0005	.00025	5	.0312
1	7518460	2.3750-8UN-3A	2.2878	1	2.3757	2.2607 + .0007		.0004	5	.039
3	7518461	2.3750-8UN-3A	2.2878	2	2.3750 +.0007	2.3419 - .0007	2.2878 +.0005	.00025	5	.0312
1	5220-751-5974	2.3750-12UN-2A	2.3128	1	2.3737	2.2948 + .0006		.0003	10	.026
3	5220-751-5975	2.3750-12UN-2A	2.3128	2	2.3731 +.0006	2.3489 - .0006	2.3128 +.0004	.0002	6	.0208
1	5220-751-5976	2.3750-12UN-3A	2.3163	1	2.3756	2.2983 + .0006		.0003	10	.026
3	5220-751-5977	2.3750-12UN-3A	2.3163	2	2.3750 +.0006	2.3524 - .0006	2.3163 +.0004	.0002	6	.0208
1	5220-751-5978	2.3750-16UN-2A	2.3272	1	2.3739	2.3137 + .0006		.0003	10	.020
3	5220-751-5979	2.3750-16UN-2A	2.3272	2	2.3733 +.0006	2.3543 - .0006	2.3272 +.0004	.00015	8	.0156
1	5220-751-5980	2.3750-16UN-3A	2.3303	1	2.3756	2.3168 + .0006		.0003	10	.020
3	5220-751-5981	2.3750-16UN-3A	2.3303	2	2.3750 +.0006	2.3574 - .0006	2.3303 +.0004	.00015	8	.0156

* 1. LO (Not Go) Thread Ring Gage 2. Truncated Thread Setting Plug Gage

ORDBA Form 20-1578, (OT) 4 May 61

Downloaded from http://www.everyspec.com

Table I. Tabulation of Design and Identification Data - Unified Standard Thread (Continued)

FIG. NO.	MARKING ON GAGE HANDLE				GAGE DIMENSIONS					
	MIL-STD PART NUMBER	THREAD DESIGNATION	LO PD / LO PD	1 / 2	MAJOR DIA / MAJOR DIA FULL PORTION	MINOR DIA / MAJOR DIA TRUNCATED PORTION	PITCH DIA	TOL ON LEAD	HALF ANGLE TOL	ROOT CLEAR
A	B	C	D	*	E	F	G	H	J	K
1	7518462	2.3750-20UN-2A	2.3359	1	2.3739	2.3251 + .0005		.0003	15	.016
3	7518463	2.3750-20UN-2A	2.3359	2	2.3734 +.0005	2.3576 - .0005	2.3359 +.0004	.00015	8	.0125
1	7518464	2.3750-20UN-3A	2.3387	1	2.3755	2.3279 + .0005		.0003	15	.016
3	7518465	2.3750-20UN-3A	2.3387	2	2.3750 +.0005	2.3604 - .0005	2.3387 +.0004	.00015	8	.0125
1	5220-751-5986	2.5000-4UNC-1A	2.3190	1	2.4978	2.2649 + .0009		.0004	5	.078
3	5220-751-5987	2.5000-4UNC-1A	2.3190	2	2.4969 +.0009	2.4273 - .0009	2.3190 +.0005	.0003	4	.0625
1	5220-751-5988	2.5000-4UNC-2A	2.3241	1	2.4978	2.2700 + .0009		.0004	5	.078
3	5220-751-5989	2.5000-4UNC-2A	2.3241	2	2.4969 +.0009	2.4324 - .0009	2.3241 +.0005	.0003	4	.0625
1	5220-751-5990	2.5000-4UNC-3A	2.3298	1	2.5009	2.2757 + .0009		.0004	5	.078
3	5220-751-5991	2.5000-4UNC-3A	2.3298	2	2.5000 +.0009	2.4381 - .0009	2.3298 +.0005	.0003	4	.0625
1	7518466	2.5000-6UN-2A	2.3800	1	2.4981	2.3439 + .0008		.0004	5	.052
3	7518467	2.5000-6UN-2A	2.3800	2	2.4973 +.0008	2.4522 - .0008	2.3800 +.0005	.0003	5	.0417
1	7518468	2.5000-6UN-3A	2.3850	1	2.5008	2.3489 + .0008		.0004	5	.052
3	7518469	2.5000-6UN-3A	2.3850	2	2.5000 +.0008	2.4572 - .0008	2.3850 +.0005	.0003	5	.0417
1	5220-751-5992	2.5000-8UN-2A	2.4082	1	2.4983	2.3811 + .0007		.0004	5	.039
3	5220-751-5993	2.5000-8UN-2A	2.4082	2	2.4976 +.0007	2.4623 - .0007	2.4082 +.0005	.00025	5	.0312
1	5220-751-5994	2.5000-8UN-3A	2.4127	1	2.5007	2.3856 + .0007		.0004	5	.039
3	5220-751-5995	2.5000-8UN-3A	2.4127	2	2.5000 +.0007	2.4668 - .0007	2.4127 +.0005	.00025	5	.0312
1	5220-751-5996	2.5000-12UN-2A	2.4378	1	2.4987	2.4198 + .0006		.0003	10	.026
3	5220-751-5997	2.5000-12UN-2A	2.4378	2	2.4981 +.0006	2.4739 - .0006	2.4378 +.0004	.0002	6	.0208
1	5220-751-5998	2.5000-12UN-3A	2.4413	1	2.5006	2.4233 + .0006		.0003	10	.026
3	5220-751-5999	2.5000-12UN-3A	2.4413	2	2.5000 +.0006	2.4774 - .0006	2.4413 +.0004	.0002	6	.0208

* 1. LO (Not Go) Thread Ring Gage 2. Truncated Thread Setting Plug Gage

ORDBA Form 20-1578, (OT) 4 May 61

Downloaded from http://www.everyspec.com

Table I. Tabulation of Design and Identification Data - Unified Standard Thread (Continued)

FIG. NO.	MARKING ON GAGE HANDLE				GAGE DIMENSIONS					
	MIL-STD PART NUMBER	THREAD DESIGNATION	LO PD / LO PD	1 / 2	MAJOR DIA / MAJOR DIA FULL PORTION	MINOR DIA / MAJOR DIA TRUNCATED PORTION	PITCH DIA	TOL ON LEAD	HALF ANGLE TOL	ROOT CLEAR
A	B	C	D	*	E	F	G	H	J	K
1	5220-751-6000	2.5000-16UN-2A	2.4522	1	2.4989	2.4387 + .0006		.0003	10	.020
3	5220-751-6001	2.5000-16UN-2A	2.4522	2	2.4983 +.0006	2.4793 - .0006	2.4522 +.0004	.00015	8	.0156
1	5220-751-6002	2.5000-16UN-3A	2.4553	1	2.5006	2.4418 + .0006		.0003	10	.020
3	5220-751-6003	2.5000-16UN-3A	2.4553	2	2.5000 +.0006	2.4824 - .0006	2.4553 +.0004	.00015	8	.0156
1	7518470	2.5000-20UN-2A	2.4609	1	2.4989	2.4501 + .0005		.0003	15	.016
3	7518471	2.5000-20UN-2A	2.4609	2	2.4984 +.0005	2.4826 - .0005	2.4609 +.0004	.00015	8	.0125
1	7518472	2.5000-20UN-3A	2.4637	1	2.5005	2.4529 + .0005		.0003	15	.016
3	7518473	2.5000-20UN-3A	2.4637	2	2.5000 +.0005	2.4854 - .0005	2.4637 +.0004	.00015	8	.0125
1	7518474	2.6250-6UN-2A	2.5050	1	2.6231	2.4689 + .0008		.0004	5	.052
3	7518475	2.6250-6UN-2A	2.5050	2	2.6223 +.0008	2.5772 - .0008	2.5050 +.0005	.0003	5	.0417
1	7518476	2.6250-6UN-3A	2.5099	1	2.6258	2.4738 + .0008		.0004	5	.052
3	7518477	2.6250-6UN-3A	2.5099	2	2.6250 +.0008	2.5821 - .0008	2.5099 +.0005	.0003	5	.0417
1	7518478	2.6250-8UN-2A	2.5331	1	2.6232	2.5060 + .0007		.0004	5	.039
3	7518479	2.6250-8UN-2A	2.5331	2	2.6225 +.0007	2.5872 - .0007	2.5331 +.0005	.00025	5	.0312
1	7518480	2.6250-8UN-3A	2.5376	1	2.6257	2.5105 + .0007		.0004	5	.039
3	7518481	2.6250-8UN-3A	2.5376	2	2.6250 +.0007	2.5917 - .0007	2.5376 +.0005	.00025	5	.0312
1	5220-751-6004	2.6250-12UN-2A	2.5628	1	2.6237	2.5448 + .0006		.0003	10	.026
3	5220-751-6005	2.6250-12UN-2A	2.5628	2	2.6231 +.0006	2.5989 - .0006	2.5628 +.0004	.0002	6	.0208
1	5220-751-6006	2.6250-12UN-3A	2.5663	1	2.6256	2.5483 + .0006		.0003	10	.026
3	5220-751-6007	2.6250-12UN-3A	2.5663	2	2.6250 +.0006	2.6024 - .0006	2.5663 +.0004	.0002	6	.0208
1	5220-751-6008	2.6250-16UN-2A	2.5772	1	2.6239	2.5637 + .0006		.0003	10	.020
3	5220-751-6009	2.6250-16UN-2A	2.5772	2	2.6233 +.0006	2.6043 - .0006	2.5772 +.0004	.00015	8	0156

* 1. LO (Not Go) Thread Ring Gage 2. Truncated Thread Setting Plug Gage

ORDBA Form 20-1578, (OT) 4 May 61

Downloaded from http://www.everyspec.com

Table I. Tabulation of Design and Identification Data - Unified Standard Thread (Continued)

FIG. NO.	MARKING ON GAGE HANDLE				GAGE DIMENSIONS					
	MIL-STD PART NUMBER	THREAD DESIGNATION	LO PD / LO PD	1 / 2	MAJOR DIA / MAJOR DIA FULL PORTION	MINOR DIA / MAJOR DIA TRUNCATED PORTION	PITCH DIA	TOL ON LEAD	HALF ANGLE TOL	ROOT CLEAR
A	B	C	D	*	E	F	G	H	J	K
1	5220-751-6010	2.6250-16UN-3A	2.5803	1	2.6256	2.5668 + .0006		.0003	10	.020
3	5220-751-6011	2.6250-16UN-3A	2.5803	2	2.6250 +.0006	2.6074 - .0006	2.5803 +.0004	.00015	8	.0156
1	7518482	2.6250-20UN-2A	2.5859	1	2.6239	2.5751 + .0005		.0003	15	.016
3	7518483	2.6250-20UN-2A	2.5859	2	2.6234 +.0005	2.6076 - .0005	2.5859 +.0004	.00015	8	.0125
1	7518484	2.6250-20UN-3A	2.5887	1	2.6255	2.5779 + .0005		.0003	15	.016
3	7518485	2.6250-20UN-3A	2.5887	2	2.6250 +.0005	2.6104 - .0005	2.5887 +.0004	.00015	8	.0125
1	5220-751-6012	2.7500-4UNC-1A	2.5686	1	2.7477	2.5145 + .0009		.0004	5	.078
3	5220-751-6013	2.7500-4UNC-1A	2.5686	2	2.7468 +.0009	2.6769 - .0009	2.5686 +.0005	.0003	4	.0625
1	5220-751-6014	2.7500-4UNC-2A	2.5739	1	2.7477	2.5198 + .0009		.0004	5	.078
3	5220-751-6015	2.7500-4UNC-2A	2.5739	2	2.7468 +.0009	2.6822 - .0009	2.5739 +.0005	.0003	4	.0625
1	5220-751-6016	2.7500-4UNC-3A	2.5797	1	2.7509	2.5256 + .0009		.0004	5	.078
3	5220-751-6017	2.7500-4UNC-3A	2.5797	2	2.7500 +.0009	2.6880 - .0009	2.5797 +.0005	.0003	4	.0625
1	7518486	2.7500-6UN-2A	2.6299	1	2.7481	2.5938 + .0008		.0004	5	.052
3	7518487	2.7500-6UN-2A	2.6299	2	2.7473 +.0008	2.7021 - .0008	2.6299 +.0005	.0003	5	.0417
1	7518488	2.7500-6UN-3A	2.6349	1	2.7508	2.5988 + .0008		.0004	5	.052
3	7518489	2.7500-6UN-3A	2.6349	2	2.7500 +.0008	2.7071 - .0008	2.6349 +.0005	.0003	5	.0417
1	5220-751-6018	2.7500-8UN-2A	2.6580	1	2.7482	2.6309 + .0007		.0004	5	.039
3	5220-751-6019	2.7500-8UN-2A	2.6580	2	2.7475 +.0007	2.7121 - .0007	2.6580 +.0005	.00025	5	.0312
1	5220-751-6020	2.7500-8UN-3A	2.6625	1	2.7507	2.6354 + .0007		.0004	5	.039
3	5220-751-6021	2.7500-8UN-3A	2.6625	2	2.7500 +.0007	2.7167 - .0007	2.6625 +.0005	.00025	5	.0312
1	5220-751-6022	2.7500-12UN-2A	2.6878	1	2.7487	2.6698 + .0006		.0003	10	.026
3	5220-751-6023	2.7500-12UN-2A	2.6878	2	2.7481 +.0006	2.7239 - .0006	2.6878 +.0004	.0002	6	.0208

* 1. LO (Not Go) Thread Ring Gage 2. Truncated Thread Setting Plug Gage

ORDBA Form 20-1578, (OT) 4 May 61

Downloaded from http://www.everyspec.com

Table I. Tabulation of Design and Identification Data - Unified Standard Thread (Continued)

FIG. NO.	MARKING ON GAGE HANDLE				GAGE DIMENSIONS					
	MIL-STD PART NUMBER	THREAD DESIGNATION	LO PD / LO PD	1 / 2	MAJOR DIA / MAJOR DIA FULL PORTION	MINOR DIA / MAJOR DIA TRUNCATED PORTION	PITCH DIA	TOL ON LEAD	HALF ANGLE TOL	ROOT CLEAR
A	B	C	D	*	E	F	G	H	J	K
1	5220-751-6024	2.7500-12UN-3A	2.6913	1	2.7506	2.6733 + .0006		.0003	10	.026
3	5220-751-6025	2.7500-12UN-3A	2.6913	2	2.7500 +.0006	2.7274 - .0006	2.6913 +.0004	.0002	6	.0208
1	5220-751-6026	2.7500-16UN-2A	2.7022	1	2.7489	2.6887 + .0006		.0003	10	.020
3	5220-751-6027	2.7500-16UN-2A	2.7022	2	2.7483 +.0006	2.7293 - .0006	2.7022 +.0004	.00015	8	.0156
1	5220-751-6028	2.7500-16UN-3A	2.7053	1	2.7506	2.6918 + .0006		.0003	10	.020
3	5220-751-6029	2.7500-16UN-3A	2.7053	2	2.7500 +.0006	2.7324 - .0006	2.7053 +.0004	.00015	8	.0156
1	7518490	2.7500-20UN-2A	2.7109	1	2.7489	2.7001 + .0005		.0003	15	.016
3	7518491	2.7500-20UN-2A	2.7109	2	2.7484 +.0005	2.7326 - .0005	2.7109 +.0004	.00015	8	.0125
1	7518492	2.7500-20UN-3A	2.7137	1	2.7505	2.7029 + .0005		.0003	15	.016
3	7518493	2.7500-20UN-3A	2.7137	2	2.7500 +.0005	2.7354 - .0005	2.7137 +.0004	.00015	8	.0125
1	7518494	2.8750-6UN-2A	2.7547	1	2.8730	2.7186 + .0008		.0004	5	.052
3	7518495	2.8750-6UN-2A	2.7547	2	2.8722 +.0008	2.8269 - .0008	2.7547 +.0005	.0003	5	.0417
1	7518496	2.8750-6UN-3A	2.7598	1	2.8758	2.7237 + .0008		.0004	5	.052
3	7518497	2.8750-6UN-3A	2.7598	2	2.8750 +.0008	2.8320 - .0008	2.7598 +.0005	.0003	5	.0417
1	7518498	2.8750-8UN-2A	2.7829	1	2.8732	2.7558 + .0007		.0004	5	.039
3	7518499	2.8750-8UN-2A	2.7829	2	2.8725 +.0007	2.8370 - .0007	2.7829 +.0005	.00025	5	.0312
1	7518500	2.8750-8UN-3A	2.7875	1	2.8757	2.7604 + .0007		.0004	5	.039
3	7518501	2.8750-8UN-3A	2.7875	2	2.8750 +.0007	2.8416 - .0007	2.7875 +.0005	.00025	5	.0312
1	5220-751-6030	2.8750-12UN-2A	2.8127	1	2.8737	2.7947 + .0006		.0003	10	.026
3	5220-751-6031	2.8750-12UN-2A	2.8127	2	2.8731 +.0006	2.8488 - .0006	2.8127 +.0004	.0002	6	.0208
1	5220-751-6032	2.8750-12UN-3A	2.8162	1	2.8756	2.7982 + .0006		.0003	10	.026
3	5220-751-6033	2.8750-12UN-3A	2.8162	2	2.8750 +.0006	2.8523 - .0006	2.8162 +.0004	.0002	6	.0208

* 1. LO (Not Go) Thread Ring Gage 2. Truncated Thread Setting Plug Gage

ORDBA Form 20-1578, (OT) 4 May 61

Downloaded from http://www.everyspec.com

Table I. Tabulation of Design and Identification Data - Unified Standard Thread (Continued)

FIG. NO.	MARKING ON GAGE HANDLE				GAGE DIMENSIONS					
	MIL-STD PART NUMBER	THREAD DESIGNATION	LO PD / LO PD	1 / 2	MAJOR DIA / MAJOR DIA FULL PORTION	MINOR DIA / MAJOR DIA TRUNCATED PORTION	PITCH DIA	TOL ON LEAD	HALF ANGLE TOL	ROOT CLEAR
A	B	C	D	*	E	F	G	H	J	K
1	5220-751-6034	2.8750-16UN-2A	2.8271	1	2.8739	2.8136 + .0006		.0003	10	.020
3	5220-751-6035	2.8750-16UN-2A	2.8271	2	2.8733 +.0006	2.8542 - .0006	2.8271 +.0004	.00015	8	.0156
1	5220-751-6036	2.8750-16UN-3A	2.8302	1	2.8756	2.8167 + .0006		.0003	10	.020
3	5220-751-6037	2.8750-16UN-3A	2.8302	2	2.8750 +.0006	2.8573 - .0006	2.8302 +.0004	.00015	8	.0156
1	7518502	2.8750-20UN-2A	2.8357	1	2.8737	2.8249 + .0005		.0003	15	.016
3	7518503	2.8750-20UN-2A	2.8357	2	2.8732 +.0005	2.8574 - .0005	2.8357 +.0004	.00015	8	.0125
1	7518504	2.8750-20UN-3A	2.8386	1	2.8755	2.8278 + .0005		.0003	15	.016
3	7518505	2.8750-20UN-3A	2.8386	2	2.8750 +.0005	2.8603 - .0005	2.8386 +.0004	.00015	8	.0125
1	5220-751-6038	3.0000-4UNC-1A	2.8183	1	2.9977	2.7642 + .0009		.0004	5	.078
3	5220-751-6039	3.0000-4UNC-1A	2.8183	2	2.9968 +.0009	2.9266 - .0009	2.8183 +.0005	.0003	4	.0625
1	5220-751-6040	3.0000-4UNC-2A	2.8237	1	2.9977	2.7696 + .0009		.0004	5	.078
3	5220-751-6041	3.0000-4UNC-2A	2.8237	2	2.9968 +.0009	2.9320 - .0009	2.8237 +.0005	.0003	4	.0625
1	5220-751-6042	3.0000-4UNC-3A	2.8296	1	3.0009	2.7755 + .0009		.0004	5	.078
3	5220-751-6043	3.0000-4UNC-3A	2.8296	2	3.0000 +.0009	2.9379 - .0009	2.8296 +.0005	.0003	4	.0625
1	7518506	3.0000-6UN-2A	2.8796	1	2.9980	2.8435 + .0008		.0004	5	.052
3	7518507	3.0000-6UN-2A	2.8796	2	2.9972 +.0008	2.9518 - .0008	2.8796 +.0005	.0003	5	.0417
1	7518508	3.0000-6UN-3A	2.8847	1	3.0008	2.8486 + .0008		.0004	5	.052
3	7518509	3.0000-6UN-3A	2.8847	2	3.0000 +.0008	2.9569 - .0008	2.8847 +.0005	.0003	5	.0417
1	5220-751-6044	3.0000-8UN-2A	2.9077	1	2.9981	2.8806 + .0007		.0004	5	.039
3	5220-751-6045	3.0000-8UN-2A	2.9077	2	2.9974 +.0007	2.9618 - .0007	2.9077 +.0005	.00025	5	.0312
1	5220-751-6046	3.0000-8UN-3A	2.9124	1	3.0007	2.8853 + .0007		.0004	5	.039
3	5220-751-6047	3.0000-8UN-3A	2.9124	2	3.0000 +.0007	2.9665 - .0007	2.9124 +.0005	.00025	5	.0312

* 1. LO (Not Go) Thread Ring Gage 2. Truncated Thread Setting Plug Gage

ORDBA Form 20-1578, (OT) 4 May 61

Downloaded from http://www.everyspec.com

Table I. Tabulation of Design and Identification Data - Unified Standard Thread (Continued)

FIG. NO.	MARKING ON GAGE HANDLE				GAGE DIMENSIONS					
	MIL-STD PART NUMBER	THREAD DESIGNATION	LO PD / LO PD	1 / 2	MAJOR DIA / MAJOR DIA FULL PORTION	MINOR DIA / MAJOR DIA TRUNCATED PORTION	PITCH DIA	TOL ON LEAD	HALF ANGLE TOL	ROOT CLEAR
A	B	C	D	*	E	F	G	H	J	K
1	5220-751-6048	3.0000-12UN-2A	2.9377	1	2.9987	2.9197 + .0006		.0003	10	.026
3	5220-751-6049	3.0000-12UN-2A	2.9377	2	2.9981 +.0006	2.9738 - .0006	2.9377 +.0004	.0002	6	.0208
1	5220-751-6050	3.0000-12UN-3A	2.9412	1	3.0006	2.9232 + .0006		.0003	10	.026
3	5220-751-6051	3.0000-12UN-3A	2.9412	2	3.0000 +.0006	2.9773 - .0006	2.9412 +.0004	.0002	6	.0208
1	5220-751-6052	3.0000-16UN-2A	2.9521	1	2.9989	2.9386 + .0006		.0003	10	.020
3	5220-751-6053	3.0000-16UN-2A	2.9521	2	2.9983 +.0006	2.9792 - .0006	2.9521 +.0004	.00015	8	.0156
1	5220-751-6054	3.0000-16UN-3A	2.9552	1	3.0006	2.9417 + .0006		.0003	10	.020
3	5220-751-6055	3.0000-16UN-3A	2.9552	2	3.0000 +.0006	2.9823 - .0006	2.9552 +.0004	.00015	8	.0156
1	7518510	3.0000-20UN-2A	2.9607	1	2.9987	2.9499 + .0005		.0003	15	.016
3	7518511	3.0000-20UN-2A	2.9607	2	2.9982 +.0005	2.9824 - .0005	2.9607 +.0004	.00015	8	.0125
1	7518512	3.0000-20UN-3A	2.9636	1	3.0005	2.9528 + .0005		.0003	15	.016
3	7518513	3.0000-20UN-3A	2.9636	2	3.0000 +.0005	2.9853 - .0005	2.9636 +.0004	.00015	8	.0125
1	7518514	3.1250-6UN-2A	3.0045	1	3.1230	2.9684 + .0008		.0004	5	.052
3	7518515	3.1250-6UN-2A	3.0045	2	3.1222 +.0008	3.0767 - .0008	3.0045 +.0005	.0003	5	.0417
1	7518516	3.1250-6UN-3A	3.0097	1	3.1258	2.9736 + .0008		.0004	5	.052
3	7518517	3.1250-6UN-3A	3.0097	2	3.1250 +.0008	3.0819 - .0008	3.0097 +.0005	.0003	5	.0417
1	7518518	3.1250-8UN-2A	3.0326	1	3.1231	3.0055 + .0007		.0004	5	.039
3	7518519	3.1250-8UN-2A	3.0326	2	3.1224 +.0007	3.0867 - .0007	3.0326 +.0005	.00025	5	.0312
1	7518520	3.1250-8UN-3A	3.0374	1	3.1257	3.0103 + .0007		.0004	5	.039
3	7518521	3.1250-8UN-3A	3.0374	2	3.1250 +.0007	3.0915 - .0007	3.0374 +.0005	.00025	5	.0312
1	5220-751-6056	3.1250-12UN-2A	3.0627	1	3.1237	3.0447 + .0006		.0003	10	.026
3	5220-751-6057	3.1250-12UN-2A	3.0627	2	3.1231 +.0006	3.0988 - .0006	3.0627 +.0004	.0002	6	.0208

* 1. LO (Not Go) Thread Ring Gage 2. Truncated Thread Setting Plug Gage

ORDBA Form 20-1578, (OT) 4 May 61

Downloaded from http://www.everyspec.com

Table I. Tabulation of Design and Identification Data - Unified Standard Thread (Continued)

FIG. NO.	MARKING ON GAGE HANDLE				GAGE DIMENSIONS					
	MIL-STD PART NUMBER	THREAD DESIGNATION	LO PD	1	MAJOR DIA	MINOR DIA		TOL ON LEAD	HALF ANGLE TOL	ROOT CLEAR
			LO PD	2	MAJOR DIA FULL PORTION	MAJOR DIA TRUNCATED PORTION	PITCH DIA			
A	B	C	D	*	E	F	G	H	J	K
1	5220-751-6058	3.1250-12UN-3A	3.0662	1	3.1256	3.0482 + .0006		.0003	10	.026
3	5220-751-6059	3.1250-12UN-3A	3.0662	2	3.1250 +.0006	3.1023 - .0006	3.0662 +.0004	.0002	6	.0208
1	5220-751-6060	3.1250-16UN-2A	3.0771	1	3.1239	3.0636 + .0006		.0003	10	.020
3	5220-751-6061	3.1250-16UN-2A	3.0771	2	3.1233 +.0006	3.1042 - .0006	3.0771 +.0004	.00015	8	.0156
1	5220-751-6062	3.1250-16UN-3A	3.0802	1	3.1256	3.0667 + .0006		.0003	10	.020
3	5220-751-6063	3.1250-16UN-3A	3.0802	2	3.1250 +.0006	3.1073 - .0006	3.0802 +.0004	.00015	8	.0156
1	5220-751-6064	3.2500-4UNC-1A	3.0680	1	3.2476	3.0139 + .0009		.0004	5	.078
3	5220-751-6065	3.2500-4UNC-1A	3.0680	2	3.2467 +.0009	3.1763 - .0009	3.0680 +.0005	.0003	4	.0625
1	5220-751-6066	3.2500-4UNC-2A	3.0734	1	3.2476	3.0193 + .0009		.0004	5	.078
3	5220-751-6067	3.2500-4UNC-2A	3.0734	2	3.2467 +.0009	3.1817 - .0009	3.0734 +.0005	.0003	4	.0625
1	5220-751-6068	3.2500-4UNC-3A	3.0794	1	3.2509	3.0253 + .0009		.0004	5	.078
3	5220-751-6069	3.2500-4UNC-3A	3.0794	2	3.2500 +.0009	3.1877 - .0009	3.0794 +.0005	.0003	4	.0625
1	7518522	3.2500-6UN-2A	3.1294	1	3.2480	3.0933 + .0008		.0004	5	.052
3	7518523	3.2500-6UN-2A	3.1294	2	3.2472 +.0008	3.2016 - .0008	3.1294 +.0005	.0003	5	.0417
1	7518524	3.2500-6UN-3A	3.1346	1	3.2508	3.0985 + .0008		.0004	5	.052
3	7518525	3.2500-6UN-3A	3.1346	2	3.2500 +.0008	3.2068 - .0008	3.1346 +.0005	.0003	5	.0417
1	5220-751-6070	3.2500-8UN-2A	3.1575	1	3.2481	3.1304 + .0007		.0004	5	.039
3	5220-751-6071	3.2500-8UN-2A	3.1575	2	3.2474 +.0007	3.2116 - .0007	3.1575 +.0005	.00025	5	.0312
1	5220-751-6072	3.2500-8UN-3A	3.1623	1	3.2507	3.1352 + .0007		.0004	5	.039
3	5220-751-6073	3.2500-8UN-3A	3.1623	2	3.2500 +.0007	3.2164 - .0007	3.1623 +.0005	.00025	5	.0312
1	5220-751-6074	3.2500-12UN-2A	3.1877	1	3.2487	3.1697 + .0006		.0003	10	.026
3	5220-751-6075	3.2500-12UN-2A	3.1877	2	3.2481 +.0006	3.2238 - .0006	3.1877 +.0004	.0002	6	.0208

* 1. LO (Not Go) Thread Ring Gage 2. Truncated Thread Setting Plug Gage

ORDBA Form 20-1578, (OT) 4 May 61

Downloaded from http://www.everyspec.com

Table I. Tabulation of Design and Identification Data - Unified Standard Thread (Continued)

FIG. NO.	MARKING ON GAGE HANDLE				GAGE DIMENSIONS					
	MIL-STD PART NUMBER	THREAD DESIGNATION	LO PD / LO PD	1 / 2	MAJOR DIA / MAJOR DIA FULL PORTION	MINOR DIA / MAJOR DIA TRUNCATED PORTION	PITCH DIA	TOL ON LEAD	HALF ANGLE TOL	ROOT CLEAR
A	B	C	D	*	E	F	G	H	J	K
1	5220-751-6076	3.2500-12UN-3A	3.1912	1	3.2506	3.1732 + .0006		.0003	10	.026
3	5220-751-6077	3.2500-12UN-3A	3.1912	2	3.2500 +.0006	3.2273 - .0006	3.1912 +.0004	.0002	6	.0208
1	5220-751-6078	3.2500-16UN-2A	3.2021	1	3.2489	3.1886 + .0006		.0003	10	.020
3	5220-751-6079	3.2500-16UN-2A	3.2021	2	3.2483 +.0006	3.2292 - .0006	3.2021 +.0004	.00015	8	.0156
1	5220-751-6080	3.2500-16UN-3A	3.2052	1	3.2506	3.1917 + .0006		.0003	10	.020
3	5220-751-6081	3.2500-16UN-3A	3.2052	2	3.2500 +.0006	3.2323 - .0006	3.2052 +.0004	.00015	8	.0156
1	7518526	3.3750-6UN-2A	3.2543	1	3.3729	3.2182 + .0008		.0004	5	.052
3	7518527	3.3750-6UN-2A	3.2543	2	3.3721 +.0008	3.3265 - .0008	3.2543 +.0005	.0003	5	.0417
1	7518528	3.3750-6UN-3A	3.2595	1	3.3758	3.2234 + .0008		.0004	5	.052
3	7518529	3.3750-6UN-3A	3.2595	2	3.3750 +.0008	3.3317 - .0008	3.2595 +.0005	.0003	5	.0417
1	7518530	3.3750-8UN-2A	3.2824	1	3.3731	3.2553 + .0007		.0004	5	.039
3	7518531	3.3750-8UN-2A	3.2824	2	3.3724 +.0007	3.3365 - .0007	3.2824 +.0005	.00025	5	.0312
1	7518532	3.3750-8UN-3A	3.2872	1	3.3757	3.2601 + .0007		.0004	5	.039
3	7518533	3.3750-8UN-3A	3.2872	2	3.3750 +.0007	3.3413 - .0007	3.2872 +.0005	.00025	5	.0312
1	5220-751-6082	3.3750-12UN-2A	3.3126	1	3.3737	3.2946 + .0006		.0003	10	.026
3	5220-751-6083	3.3750-12UN-2A	3.3126	2	3.3731 +.0006	3.3487 - .0006	3.3126 +.0004	.0002	6	.0208
1	5220-751-6084	3.3750-12UN-3A	3.3161	1	3.3756	3.2981 + .0006		.0003	10	.026
3	5220-751-6085	3.3750-12UN-3A	3.3161	2	3.3750 +.0006	3.3522 - .0006	3.3161 +.0004	.0002	6	.0208
1	5220-751-6086	3.3750-16UN-2A	3.3269	1	3.3739	3.3134 + .0006		.0003	10	.020
3	5220-751-6087	3.3750-16UN-2A	3.3269	2	3.3733 +.0006	3.3540 - .0006	3.3269 +.0004	.00015	8	.0156
1	5220-751-6088	3.3750-16UN-3A	3.3301	1	3.3756	3.3166 + .0006		.0003	10	.020
3	5220-751-6089	3.3750-16UN-3A	3.3301	2	3.3750 +.0006	3.3572 - .0006	3.3301 +.0004	.00015	8	.0156

* 1. LO (Not Go) Thread Ring Gage 2. Truncated Thread Setting Plug Gage

ORDBA Form 20-1578, (OT) 4 May 61

Downloaded from http://www.everyspec.com

Table I. Tabulation of Design and Identification Data - Unified Standard Thread (Continued)

FIG. NO.	MARKING ON GAGE HANDLE				GAGE DIMENSIONS					
	MIL-STD PART NUMBER	THREAD DESIGNATION	LO PD / LO PD	*	MAJOR DIA / MAJOR DIA FULL PORTION	MINOR DIA / MAJOR DIA TRUNCATED PORTION	PITCH DIA	TOL ON LEAD	HALF ANGLE TOL	ROOT CLEAR
A	B	C	D	*	E	F	G	H	J	K
1	5220-751-6090	3.5000-4UNC-1A	3.3177	1	3.4976	3.2636 + .0009		.0004	5	.078
3	5220-751-6091	3.5000-4UNC-1A	3.3177	2	3.4967 +.0009	3.4260 - .0009	3.3177 +.0005	.0003	4	.0625
1	5220-751-6092	3.5000-4UNC-2A	3.3233	1	3.4976	3.2692 + .0009		.0004	5	.078
3	5220-751-6093	3.5000-4UNC-2A	3.3233	2	3.4967 +.0009	3.4316 - .0009	3.3233 +.0005	.0003	4	.0625
1	5220-751-6094	3.5000-4UNC-3A	3.3293	1	3.5009	3.2752 + .0009		.0004	5	.078
3	5220-751-6095	3.5000-4UNC-3A	3.3293	2	3.5000 +.0009	3.4376 - .0009	3.3293 +.0005	.0003	4	.0625
1	7518534	3.5000-6UN-2A	3.3792	1	3.4979	3.3431 + .0008		.0004	5	.052
3	7518535	3.5000-6UN-2A	3.3792	2	3.4971 +.0008	3.4514 - .0008	3.3792 +.0005	.0003	5	.0417
1	7518536	3.5000-6UN-3A	3.3845	1	3.5008	3.3484 + .0008		.0004	5	.052
3	7518537	3.5000-6UN-3A	3.3845	2	3.5000 +.0008	3.4567 - .0008	3.3845 +.0005	.0003	5	.0417
1	5220-751-6096	3.5000-8UN-2A	3.4074	1	3.4981	3.3803 + .0007		.0004	5	.039
3	5220-751-6097	3.5000-8UN-2A	3.4074	2	3.4974 +.0007	3.4615 - .0007	3.4074 +.0005	.00025	5	.0312
1	5220-751-6098	3.5000-8UN-3A	3.4122	1	3.5007	3.3851 + .0007		.0004	5	.039
3	5220-751-6099	3.5000-8UN-3A	3.4122	2	3.5000 +.0007	3.4663 - .0007	3.4122 +.0005	.00025	5	.0312
1	5220-751-6100	3.5000-12UN-2A	3.4376	1	3.4987	3.4196 + .0006		.0003	10	.026
3	5220-751-6101	3.5000-12UN-2A	3.4376	2	3.4981 +.0006	3.4737 - .0006	3.4376 +.0004	.0002	6	.0208
1	5220-751-6102	3.5000-12UN-3A	3.4411	1	3.5006	3.4231 + .0006		.0003	10	.026
3	5220-751-6103	3.5000-12UN-3A	3.4411	2	3.5000 +.0006	3.4772 - .0006	3.4411 +.0004	.0002	6	.0208
1	5220-751-6104	3.5000-16UN-2A	3.4519	1	3.4989	3.4384 + .0006		.0003	10	.020
3	5220-751-6105	3.5000-16UN-2A	3.4519	2	3.4983 +.0006	3.4790 - .0006	3.4519 +.0004	.00015	8	.0156
1	5220-751-6106	3.5000-16UN-3A	3.4551	1	3.5006	3.4416 + .0006		.0003	10	.020
3	5220-751-6107	3.5000-16UN-3A	3.4551	2	3.5000 +.0006	3.4822 - .0006	3.4551 +.0004	.00015	8	.0156

* 1. LO (Not Go) Thread Ring Gage 2. Truncated Thread Setting Plug Gage

ORDBA Form 20-1578, (OT) 4 May 61

Downloaded from http://www.everyspec.com

Table I. Tabulation of Design and Identification Data - Unified Standard Thread (Continued)

FIG. NO.	MARKING ON GAGE HANDLE				GAGE DIMENSIONS					
	MIL-STD PART NUMBER	THREAD DESIGNATION	LO PD	1	MAJOR DIA	MINOR DIA	———	TOL ON LEAD	HALF ANGLE TOL	ROOT CLEAR
			LO PD	2	MAJOR DIA FULL PORTION	MAJOR DIA TRUNCATED PORTION	PITCH DIA			
A	B	C	D	*	E	F	G	H	J	K
1	7518538	3.6250-6UN-2A	3.5041	1	3.6229	3.4680 + .0008		.0004	5	.052
3	7518539	3.6250-6UN-2A	3.5041	2	3.6221 +.0008	3.5763 - .0008	3.5041 +.0005	.0003	5	.0417
1	7518540	3.6250-6UN-3A	3.5094	1	3.6258	3.4733 + .0008		.0004	5	.052
3	7518541	3.6250-6UN-3A	3.5094	2	3.6250 +.0008	3.5816 - .0008	3.5094 +.0005	.0003	5	.0417
1	7518542	3.6250-8UN-2A	3.5322	1	3.6230	3.5051 + .0007		.0004	5	.039
3	7518543	3.6250-8UN-2A	3.5322	2	3.6223 +.0007	3.5863 - .0007	3.5322 +.0005	.00025	5	.0312
1	7518544	3.6250-8UN-3A	3.5371	1	3.6257	3.5100 + .0007		.0004	5	.039
3	7518545	3.6250-8UN-3A	3.5371	2	3.6250 +.0007	3.5912 - .0007	3.5371 +.0005	.00025	5	.0312
1	5220-751-6108	3.6250-12UN-2A	3.5626	1	3.6237	3.5446 + .0006		.0003	10	.026
3	5220-751-6109	3.6250-12UN-2A	3.5626	2	3.6231 +.0006	3.5987 - .0006	3.5626 +.0004	.0002	6	.0208
1	5220-751-6110	3.6250-12UN-3A	3.5661	1	3.6256	3.5481 + .0006		.0003	10	.026
3	5220-751-6111	3.6250-12UN-3A	3.5661	2	3.6250 +.0006	3.6022 - .0006	3.5661 +.0004	.0002	6	.0208
1	5220-751-6112	3.6250-16UN-2A	3.5769	1	3.6239	3.5634 + .0006		.0003	10	.020
3	5220-751-6113	3.6250-16UN-2A	3.5769	2	3.6233 +.0006	3.6040 - .0006	3.5769 +.0004	.00015	8	.0156
1	5220-751-6114	3.6250-16UN-3A	3.5801	1	3.6256	3.5666 + .0006		.0003	10	.020
3	5220-751-6115	3.6250-16UN-3A	3.5801	2	3.6250 +.0006	3.6072 - .0006	3.5801 +.0004	.00015	8	.0156
1	5220-751-6116	3.7500-4UNC-1A	3.5674	1	3.7475	3.5133 + .0009		.0004	5	.078
3	5220-751-6117	3.7500-4UNC-1A	3.5674	2	3.7466 +.0009	3.6757 - .0009	3.5674 +.0005	.0003	4	.0625
1	5220-751-6118	3.7500-4UNC-2A	3.5730	1	3.7475	3.5189 + .0009		.0004	5	.078
3	5220-751-6119	3.7500-4UNC-2A	3.5730	2	3.7466 +.0009	3.6813 - .0009	3.5730 +.0005	.0003	4	.0625
1	5220-751-6120	3.7500-4UNC-3A	3.5792	1	3.7509	3.5251 + .0009		.0004	5	.078
3	5220-751-6121	3.7500-4UNC-3A	3.5792	2	3.7500 +.0009	3.6875 - .0009	3.5792 +.0005	.0003	4	.0625

* 1. LO (Not Go) Thread Ring Gage 2. Truncated Thread Setting Plug Gage

ORDBA Form 20-1578, (OT) 4 May 61

Downloaded from http://www.everyspec.com

Table I. Tabulation of Design and Identification Data - Unified Standard Thread (Continued)

FIG. NO.	MARKING ON GAGE HANDLE				GAGE DIMENSIONS					
	MIL-STD PART NUMBER	THREAD DESIGNATION	LO PD / LO PD	1 / 2	MAJOR DIA / MAJOR DIA FULL PORTION	MINOR DIA / MAJOR DIA TRUNCATED PORTION	PITCH DIA	TOL ON LEAD	HALF ANGLE TOL	ROOT CLEAR
A	B	C	D	*	E	F	G	H	J	K
1	7518546	3.7500-6UN-2A	3.6290	1	3.7479	3.5929 + .0008		.0004	5	.052
3	7518547	3.7500-6UN-2A	3.6290	2	3.7471 +.0008	3.7012 - .0008	3.6290 +.0005	.0003	5	.0417
1	7518548	3.7500-6UN-3A	3.6344	1	3.7508	3.5983 + .0008		.0004	5	.052
3	7518549	3.7500-6UN-3A	3.6344	2	3.7500 +.0008	3.7066 - .0008	3.6344 +.0005	.0003	5	.0417
1	5220-751-6122	3.7500-8UN-2A	3.6571	1	3.7480	3.6300 + .0007		.0004	5	.039
3	5220-751-6123	3.7500-8UN-2A	3.6571	2	3.7473 +.0007	3.7112 - .0007	3.6571 +.0005	.00025	5	.0312
1	5220-751-6124	3.7500-8UN-3A	3.6621	1	3.7507	3.6350 + .0007		.0004	5	.039
3	5220-751-6125	3.7500-8UN-3A	3.6621	2	3.7500 +.0007	3.7162 - .0007	3.6621 +.0005	.00025	5	.0312
1	5220-751-6126	3.7500-12UN-2A	3.6876	1	3.7487	3.6696 + .0006		.0003	10	.026
3	5220-751-6127	3.7500-12UN-2A	3.6876	2	3.7481 +.0006	3.7237 - .0006	3.6876 +.0004	.0002	6	.0208
1	5220-751-6128	3.7500-12UN-3A	3.6911	1	3.7506	3.6731 + .0006		.0003	10	.026
3	5220-751-6129	3.7500-12UN-3A	3.6911	2	3.7500 +.0006	3.7272 - .0006	3.6911 +.0004	.0002	6	.0208
1	5220-751-6130	3.7500-16UN-2A	3.7019	1	3.7489	3.6884 + .0006		.0003	10	.020
3	5220-751-6131	3.7500-16UN-2A	3.7019	2	3.7483 +.0006	3.7290 - .0006	3.7019 +.0004	.00015	8	.0156
1	5220-751-6132	3.7500-16UN-3A	3.7051	1	3.7506	3.6916 + .0006		.0003	10	.020
3	5220-751-6133	3.7500-16UN-3A	3.7051	2	3.7500 +.0006	3.7322 - .0006	3.7051 +.0004	.00015	8	.0156
1	7518550	3.8750-6UN-2A	3.7538	1	3.8728	3.7177 + .0008		.0004	5	.052
3	7518551	3.8750-6UN-2A	3.7538	2	3.8720 +.0008	3.8260 - .0008	3.7538 +.0005	.0003	5	.0417
1	7518552	3.8750-6UN-3A	3.7593	1	3.8758	3.7232 + .0008		.0004	5	.052
3	7518553	3.8750-6UN-3A	3.7593	2	3.8750 +.0008	3.8315 - .0008	3.7593 +.0005	.0003	5	.0417
1	7518554	3.8750-8UN-2A	3.7820	1	3.8730	3.7549 + .0007		.0004	5	.039
3	7518555	3.8750-8UN-2A	3.7820	2	3.8723 +.0007	3.8361 - .0007	3.7820 +.0005	.00025	5	.0312

* 1. LO (Not Go) Thread Ring Gage 2. Truncated Thread Setting Plug Gage

ORDBA Form 20-1578, (OT) 4 May 61

Downloaded from http://www.everyspec.com

Table I. Tabulation of Design and Identification Data - Unified Standard Thread (Continued)

FIG. NO.	MARKING ON GAGE HANDLE				GAGE DIMENSIONS					
	MIL-STD PART NUMBER	THREAD DESIGNATION	LO PD / LO PD	1 / 2	MAJOR DIA / MAJOR DIA FULL PORTION	MINOR DIA / MAJOR DIA TRUNCATED PORTION	PITCH DIA	TOL ON LEAD	HALF ANGLE TOL	ROOT CLEAR
A	B	C	D	*	E	F	G	H	J	K
1	7518556	3.8750-8UN-3A	3.7870	1	3.8757	3.7599 + .0007		.0004	5	.039
3	7518557	3.8750-8UN-3A	3.7870	2	3.8750 +.0007	3.8411 - .0007	3.7870 +.0005	.00025	5	.0312
1	5220-751-6134	3.8750-12UN-2A	3.8124	1	3.8736	3.7944 + .0006		.0003	10	.026
3	5220-751-6135	3.8750-12UN-2A	3.8124	2	3.8730 +.0006	3.8485 - .0006	3.8124 +.0004	.0002	6	.0208
1	5220-751-6136	3.8750-12UN-3A	3.8160	1	3.8756	3.7980 + .0006		.0003	10	.026
3	5220-751-6137	3.8750-12UN-3A	3.8160	2	3.8750 +.0006	3.8521 - .0006	3.8160 +.0004	.0002	6	.0208
1	5220-751-6138	3.8750-16UN-2A	3.8267	1	3.8738	3.8132 + .0006		.0003	10	.020
3	5220-751-6139	3.8750-16UN-2A	3.8267	2	3.8732 +.0006	3.8538 - .0006	3.8267 +.0004	.00015	8	.0156
1	5220-751-6140	3.8750-16UN-3A	3.8300	1	3.8756	3.8165 + .0006		.0003	10	.020
3	5220-751-6141	3.8750-16UN-3A	3.8300	2	3.8750 +.0006	3.8571 - .0006	3.8300 +.0004	.00015	8	.0156
1	5220-751-6142	4.0000-4UNC-1A	3.8172	1	3.9975	3.7631 + .0009		.0004	5	.078
3	5220-751-6143	4.0000-4UNC-1A	3.8172	2	3.9966 +.0009	3.9255 - .0009	3.8172 +.0005	.0003	4	.0625
1	5220-751-6144	4.0000-4UNC-2A	3.8229	1	3.9975	3.7688 + .0009		.0004	5	.078
3	5220-751-6145	4.0000-4UNC-2A	3.8229	2	3.9966 +.0009	3.9312 - .0009	3.8229 +.0005	.0003	4	.0625
1	5220-751-6146	4.0000-4UNC-3A	3.8291	1	4.0009	3.7750 + .0009		.0004	5	.078
3	5220-751-6147	4.0000-4UNC-3A	3.8291	2	4.0000 +.0009	3.9374 - .0009	3.8291 +.0005	.0003	4	.0625
1	7518558	4.0000-6UN-2A	3.8788	1	3.9978	3.8427 + .0008		.0004	5	.052
3	7518559	4.0000-6UN-2A	3.8788	2	3.9970 +.0008	3.9510 - .0008	3.8788 +.0005	.0003	5	.0417
1	7518560	4.0000-6UN-3A	3.8843	1	4.0008	3.8482 + .0008		.0004	5	.052
3	7518561	4.0000-6UN-3A	3.8843	2	4.0000 +.0008	3.9565 - .0008	3.8843 +.0005	.0003	5	.0417
1	5220-751-6148	4.0000-8UN-2A	3.9070	1	3.9980	3.8799 + .0007		.0004	5	.039
3	5220-751-6149	4.0000-8UN-2A	3.9070	2	3.9973 +.0007	3.9611 - .0007	3.9070 +.0005	.00025	5	.0312

* 1. LO (Not Go) Thread Ring Gage 2. Truncated Thread Setting Plug Gage

ORDEA Form 20-1378, (OT) 4 May 61

Downloaded from http://www.everyspec.com

Table I. Tabulation of Design and Identification Data - Unified Standard Thread (Continued)

FIG. NO.	MARKING ON GAGE HANDLE				GAGE DIMENSIONS					
	MIL-STD PART NUMBER	THREAD DESIGNATION	LO PD / LO PD	1 / 2	MAJOR DIA / MAJOR DIA FULL PORTION	MINOR DIA / MAJOR DIA TRUNCATED PORTION	PITCH DIA	TOL ON LEAD	HALF ANGLE TOL	ROOT CLEAR
A	B	C	D	*	E	F	G	H	J	K
1	5220-751-6150	4.0000-8UN-3A	3.9120	1	4.0007	3.8849 + .0007		.0004	5	.039
3	5220-751-6151	4.0000-8UN-3A	3.9120	2	4.0000 +.0007	3.9661 - .0007	3.9120 +.0005	.00025	5	.0312
1	5220-751-6152	4.0000-12UN-2A	3.9374	1	3.9986	3.9194 + .0006		.0003	10	.026
3	5220-751-6153	4.0000-12UN-2A	3.9374	2	3.9980 +.0006	3.9735 - .0006	3.9374 +.0004	.0002	6	.0208
1	5220-751-6154	4.0000-12UN-3A	3.9410	1	4.0006	3.9230 + .0006		.0003	10	.026
3	5220-751-6155	4.0000-12UN-3A	3.9410	2	4.0000 +.0006	3.9771 - .0006	3.9410 +.0004	.0002	6	.0208
1	5220-751-6156	4.0000-16UN-2A	3.9517	1	3.9988	3.9382 + .0006		.0003	10	.020
3	5220-751-6157	4.0000-16UN-2A	3.9517	2	3.9982 +.0006	3.9788 - .0006	3.9517 +.0004	.00015	8	.0156
1	5220-751-6158	4.0000-16UN-3A	3.9550	1	4.0006	3.9415 + .0006		.0003	10	.020
3	5220-751-6159	4.0000-16UN-3A	3.9550	2	4.0000 +.0006	3.9821 - .0006	3.9550 +.0004	.00015	8	.0156
1	7518562	4.1250-6UN-2A	4.0037	1	4.1233	3.9676 + .0013		.0004	5	.052
3	7518563	4.1250-6UN-2A	4.0037	2	4.1220 +.0013	4.0759 - .0013	4.0037 +.0006	.0003	5	.0417
1	7518564	4.1250-6UN-3A	4.0092	1	4.1263	3.9731 + .0013		.0004	5	.052
3	7518565	4.1250-6UN-3A	4.0092	2	4.1250 +.0013	4.0814 - .0013	4.0092 +.0006	.0003	5	.0417
1	7518566	4.1250-12UN-2A	4.0624	1	4.1239	4.0444 + .0009		.0003	10	.026
3	7518567	4.1250-12UN-2A	4.0624	2	4.1230 +.0009	4.0985 - .0009	4.0624 +.0006	.0002	6	.0208
1	7518568	4.1250-12UN-3A	4.0660	1	4.1259	4.0480 + .0009		.0003	10	.026
3	7518569	4.1250-12UN-3A	4.0660	2	4.1250 +.0009	4.1021 - .0009	4.0660 +.0006	.0002	6	.0208
1	7518570	4.1250-16UN-2A	4.0767	1	4.1241	4.0632 + .0009		.0003	10	.020
3	7518571	4.1250-16UN-2A	4.0767	2	4.1232 +.0009	4.1038 - .0009	4.0767 +.0006	.00015	8	.0156
1	7518572	4.1250-16UN-3A	4.0800	1	4.1259	4.0665 + .0009		.0003	10	.020
3	7518573	4.1250-16UN-3A	4.0800	2	4.1250 +.0009	4.1071 - .0009	4.0800 +.0006	.00015	8	.0156

* 1. LO (Not Go) Thread Ring Gage 2. Truncated Thread Setting Plug Gage

ORDBA Form 20-1578, (OT) 4 May 61

Downloaded from http://www.everyspec.com

Table I. Tabulation of Design and Identification Data - Unified Standard Thread (Continued)

FIG. NO.	MARKING ON GAGE HANDLE				GAGE DIMENSIONS					
	MIL-STD PART NUMBER	THREAD DESIGNATION	LO PD / LO PD	1 / 2	MAJOR DIA / MAJOR DIA FULL PORTION	MINOR DIA / MAJOR DIA TRUNCATED PORTION	PITCH DIA	TOL ON LEAD	HALF ANGLE TOL	ROOT CLEAR
A	B	C	D	*	E	F	G	H	J	K
1	7518574	4.2500-4UN-2A	4.0727	1	4.2481	4.0186 + .0015		.0004	5	.078
3	7518575	4.2500-4UN-2A	4.0727	2	4.2466 +.0015	4.1810 - .0015	4.0727 +.0006	.0003	4	.0625
1	7518576	4.2500-4UN-3A	4.0790	1	4.2515	4.0249 + .0015		.0004	5	.078
3	7518577	4.2500-4UN-3A	4.0790	2	4.2500 +.0015	4.1873 - .0015	4.0790 +.0006	.0003	4	.0625
1	7518578	4.2500-6UN-2A	4.1286	1	4.2483	4.0925 + .0013		.0004	5	.052
3	7518579	4.2500-6UN-2A	4.1286	2	4.2470 +.0013	4.2008 - .0013	4.1286 +.0006	.0003	5	.0417
1	7518580	4.2500-6UN-3A	4.1342	1	4.2513	4.0981 + .0013		.0004	5	.052
3	7518581	4.2500-6UN-3A	4.1342	2	4.2500 +.0013	4.2064 - .0013	4.1342 +.0006	.0003	5	.0417
1	5220-751-6164	4.2500-12UN-2A	4.1874	1	4.2489	4.1694 + .0009		.0003	10	.026
3	5220-751-6165	4.2500-12UN-2A	4.1874	2	4.2480 +.0009	4.2235 - .0009	4.1874 +.0006	.0002	6	.0208
1	5220-751-6166	4.2500-12UN-3A	4.1910	1	4.2509	4.1730 + .0009		.0003	10	.026
3	5220-751-6167	4.2500-12UN-3A	4.1910	2	4.2500 +.0009	4.2271 - .0009	4.1910 +.0006	.0002	6	.0208
1	5220-751-6168	4.2500-16UN-2A	4.2017	1	4.2491	4.1882 + .0009		.0003	10	.020
3	5220-751-6169	4.2500-16UN-2A	4.2017	2	4.2482 +.0009	4.2288 - .0009	4.2017 +.0006	.00015	8	.0156
1	5220-751-6170	4.2500-16UN-3A	4.2050	1	4.2509	4.1915 + .0009		.0003	10	.020
3	5220-751-6171	4.2500-16UN-3A	4.2050	2	4.2500 +.0009	4.2321 - .0009	4.2050 +.0006	.00015	8	.0156
1	7518582	4.3750-6UN-2A	4.2536	1	4.3733	4.2175 + .0013		.0004	5	.052
3	7518583	4.3750-6UN-2A	4.2536	2	4.3720 +.0013	4.3258 - .0013	4.2536 +.0006	.0003	5	.0417
1	7518584	4.3750-6UN-3A	4.2591	1	4.3763	4.2230 + .0013		.0004	5	.052
3	7518585	4.3750-6UN-3A	4.2591	2	4.3750 +.0013	4.3313 - .0013	4.2591 +.0006	.0003	5	.0417
1	7518586	4.3750-12UN-2A	4.3124	1	4.3739	4.2944 + .0009		.0003	10	.026
3	7518587	4.3750-12UN-2A	4.3124	2	4.3730 +.0009	4.3485 - .0009	4.3124 +.0006	.0002	6	.0208

* 1. LO (Not Go) Thread Ring Gage 2. Truncated Thread Setting Plug Gage

ORDBA Form 20-1578, (OT) 4 May 61

Downloaded from http://www.everyspec.com

Table I. Tabulation of Design and Identification Data - Unified Standard Thread (Continued)

FIG. NO.	MARKING ON GAGE HANDLE				GAGE DIMENSIONS					
	MIL-STD PART NUMBER	THREAD DESIGNATION	LO PD / LO PD	1 / 2	MAJOR DIA / MAJOR DIA FULL PORTION	MINOR DIA / MAJOR DIA TRUNCATED PORTION	PITCH DIA	TOL ON LEAD	HALF ANGLE TOL	ROOT CLEAR
A	B	C	D	*	E	F	G	H	J	K
1	7518588	4.3750-12UN-3A	4.3160	1	4.3759	4.2980 + .0009		.0003	10	.026
3	7518589	4.3750-12UN-3A	4.3160	2	4.3750 +.0009	4.3521 - .0009	4.3160 +.0006	.0002	6	.0208
1	7518590	4.3750-16UN-2A	4.3267	1	4.3741	4.3132 + .0009		.0003	10	.020
3	7518591	4.3750-16UN-2A	4.3267	2	4.3732 +.0009	4.3538 - .0009	4.3267 +.0006	.00015	8	.0156
1	7518592	4.3750-16UN-3A	4.3300	1	4.3759	4.3165 + .0009		.0003	10	.020
3	7518593	4.3750-16UN-3A	4.3300	2	4.3750 +.0009	4.3571 - .0009	4.3300 +.0006	.00015	8	.0156
1	7518594	4.5000-4UN-2A	4.3225	1	4.4980	4.2684 + .0015		.0004	5	.078
3	7518595	4.5000-4UN-2A	4.3225	2	4.4965 +.0015	4.4308 - .0015	4.3225 +.0006	.0003	4	.0625
1	7518596	4.5000-4UN-3A	4.3289	1	4.5015	4.2748 + .0015		.0004	5	.078
3	7518597	4.5000-4UN-3A	4.3289	2	4.5000 +.0015	4.4372 - .0015	4.3289 +.0006	.0003	4	.0625
1	7518598	4.5000-6UN-2A	4.3784	1	4.4982	4.3423 + .0013		.0004	5	.052
3	7518599	4.5000-6UN-2A	4.3784	2	4.4969 +.0013	4.4506 - .0013	4.3784 +.0006	.0003	5	.0417
1	7518600	4.5000-6UN-3A	4.3840	1	4.5013	4.3479 + .0013		.0004	5	.052
3	7518601	4.5000-6UN-3A	4.3840	2	4.5000 +.0013	4.4562 - .0013	4.3840 +.0006	.0003	5	.0417
1	5220-751-6176	4.5000-12UN-2A	4.4374	1	4.4989	4.4194 + .0009		.0003	10	.026
3	5220-751-6177	4.5000-12UN-2A	4.4374	2	4.4980 +.0009	4.4735 - .0009	4.4374 +.0006	.0002	6	.0208
1	5220-751-6178	4.5000-12UN-3A	4.4410	1	4.5009	4.4230 + .0009		.0003	10	.026
3	5220-751-6179	4.5000-12UN-3A	4.4410	2	4.5000 +.0009	4.4771 - .0009	4.4410 +.0006	.0002	6	.0208
1	5220-751-6180	4.5000-16UN-2A	4.4517	1	4.4991	4.4382 + .0009		.0003	10	.020
3	5220-751-6181	4.5000-16UN-2A	4.4517	2	4.4982 +.0009	4.4788 - .0009	4.4517 +.0006	.00015	8	.0156
1	5220-751-6182	4.5000-16UN-3A	4.4550	1	4.5009	4.4415 + .0009		.0003	10	.020
3	5220-751-6183	4.5000-16UN-3A	4.4550	2	4.5000 +.0009	4.4821 - .0009	4.4550 +.0006	.00015	8	.0156

* 1. LO (Not Go) Thread Ring Gage 2. Truncated Thread Setting Plug Gage

ORDBA Form 20-1578, (OT) 4 May 61

Downloaded from http://www.everyspec.com

Table I. Tabulation of Design and Identification Data - Unified Standard Thread (Continued)

FIG. NO.	MARKING ON GAGE HANDLE				GAGE DIMENSIONS					
	MIL-STD PART NUMBER	THREAD DESIGNATION	LO PD / LO PD	1 / 2	MAJOR DIA / MAJOR DIA FULL PORTION	MINOR DIA / MAJOR DIA TRUNCATED PORTION	PITCH DIA	TOL ON LEAD	HALF ANGLE TOL	ROOT CLEAR
A	B	C	D	*	E	F	G	H	J	K
1	7518602	4.6250-6UN-2A	4.5033	1	4.6232	4.4672 + .0013		.0004	5	.052
3	7518603	4.6250-6UN-2A	4.5033	2	4.6219 +.0013	4.5755 - .0013	4.5033 +.0006	.0003	5	.0417
1	7518604	4.6250-6UN-3A	4.5090	1	4.6263	4.4729 + .0013		.0004	5	.052
3	7518605	4.6250-6UN-3A	4.5090	2	4.6250 +.0013	4.5812 - .0013	4.5090 +.0006	.0003	5	.0417
1	7518606	4.6250-12UN-2A	4.5622	1	4.6239	4.5442 + .0009		.0003	10	.026
3	7518607	4.6250-12UN-2A	4.5622	2	4.6230 +.0009	4.5983 - .0009	4.5622 +.0006	.0002	6	.0208
1	7518608	4.6250-12UN-3A	4.5659	1	4.6259	4.5479 + .0009		.0003	10	.026
3	7518609	4.6250-12UN-3A	4.5659	2	4.6250 +.0009	4.6020 - .0009	4.5659 +.0006	.0002	6	.0208
1	7518610	4.6250-16UN-2A	4.5765	1	4.6241	4.5630 + .0009		.0003	10	.020
3	7518611	4.6250-16UN-2A	4.5765	2	4.6232 +.0009	4.6036 - .0009	4.5765 +.0006	.00015	8	.0156
1	7518612	4.6250-16UN-3A	4.5799	1	4.6259	4.5664 + .0009		.0003	10	.020
3	7518613	4.6250-16UN-3A	4.5799	2	4.6250 +.0009	4.6070 - .0009	4.5799 +.0006	.00015	8	.0156
1	7518614	4.7500-4UN-2A	4.5724	1	4.7480	4.5183 + .0015		.0004	5	.078
3	7518615	4.7500-4UN-2A	4.5724	2	4.7465 +.0015	4.6807 - .0015	4.5724 +.0006	.0003	4	.0625
1	7518616	4.7500-4UN-3A	4.5788	1	4.7515	4.5247 + .0015		.0004	5	.078
3	7518617	4.7500-4UN-3A	4.5788	2	4.7500 +.0015	4.6871 - .0015	4.5788 +.0006	.0003	4	.0625
1	7518618	4.7500-6UN-2A	4.6283	1	4.7482	4.5922 + .0013		.0004	5	.052
3	7518619	4.7500-6UN-2A	4.6283	2	4.7469 +.0013	4.7005 - .0013	4.6283 +.0006	.0003	5	.0417
1	7518620	4.7500-6UN-3A	4.6340	1	4.7513	4.5979 + .0013		.0004	5	.052
3	7518621	4.7500-6UN-3A	4.6340	2	4.7500 +.0013	4.7062 - .0013	4.6340 +.0006	.0003	5	.0417
1	5220-751-6188	4.7500-12UN-2A	4.6872	1	4.7489	4.6692 + .0009		.0003	10	.026
3	5220-751-6189	4.7500-12UN-2A	4.6872	2	4.7480 +.0009	4.7233 - .0009	4.6872 +.0006	.0002	6	.0208

* 1. LO (Not Go) Thread Ring Gage 2. Truncated Thread Setting Plug Gage

ORDBA Form 20-1578, (OT) 4 May 61

Downloaded from http://www.everyspec.com

Table I. Tabulation of Design and Identification Data - Unified Standard Thread (Continued)

FIG. NO.	MARKING ON GAGE HANDLE				GAGE DIMENSIONS					
	MIL-STD PART NUMBER	THREAD DESIGNATION	LO PD / LO PD	1 / 2	MAJOR DIA / MAJOR DIA FULL PORTION	MINOR DIA / MAJOR DIA TRUNCATED PORTION	PITCH DIA	TOL ON LEAD	HALF ANGLE TOL	ROOT CLEAR
A	B	C	D	*	E	F	G	H	J	K
1	5220-751-6190	4.7500-12UN-3A	4.6909	1	4.7509	4.6729 + .0009		.0003	10	.026
3	5220-751-6191	4.7500-12UN-3A	4.6909	2	4.7500 +.0009	4.7270 - .0009	4.6909 +.0006	.0002	6	.0208
1	5220-751-6192	4.7500-16UN-2A	4.7015	1	4.7491	4.6880 + .0009		.0003	10	.020
3	5220-751-6193	4.7500-16UN-2A	4.7015	2	4.7482 +.0009	4.7286 - .0009	4.7015 +.0006	.00015	8	.0156
1	5220-751-6194	4.7500-16UN-3A	4.7049	1	4.7509	4.6914 + .0009		.0003	10	.020
3	5220-751-6195	4.7500-16UN-3A	4.7049	2	4.7500 +.0009	4.7320 - .0009	4.7049 +.0006	.00015	8	.0156
1	7518622	4.8750-6UN-2A	4.7532	1	4.8732	4.7171 + .0013		.0004	5	.052
3	7518623	4.8750-6UN-2A	4.7532	2	4.8719 +.0013	4.8254 - .0013	4.7532 +.0006	.0003	5	.0417
1	7518624	4.8750-6UN-3A	4.7589	1	4.8763	4.7228 + .0013		.0004	5	.052
3	7518625	4.8750-6UN-3A	4.7589	2	4.8750 +.0013	4.8311 - .0013	4.7589 +.0006	.0003	5	.0417
1	7518626	4.8750-12UN-2A	4.8122	1	4.8739	4.7942 + .0009		.0003	10	.026
3	7518627	4.8750-12UN-2A	4.8122	2	4.8730 +.0009	4.8483 - .0009	4.8122 +.0006	.0002	6	.0208
1	7518628	4.8750-12UN-3A	4.8159	1	4.8759	4.7979 + .0009		.0003	10	.026
3	7518629	4.8750-12UN-3A	4.8159	2	4.8750 +.0009	4.8520 - .0009	4.8159 +.0006	.0002	6	.0208
1	7518630	4.8750-16UN-2A	4.8265	1	4.8741	4.8130 + .0009		.0003	10	.020
3	7518631	4.8750-16UN-2A	4.8265	2	4.8732 +.0009	4.8536 - .0009	4.8265 +.0006	.00015	8	.0156
1	7518632	4.8750-16UN-3A	4.8299	1	4.8759	4.8164 + .0009		.0003	10	.020
3	7518633	4.8750-16UN-3A	4.8299	2	4.8750 +.0009	4.8570 - .0009	4.8299 +.0006	.00015	8	.0156
1	7518634	5.0000-4UN-2A	4.8221	1	4.9979	4.7680 + .0015		.0004	5	.078
3	7518635	5.0000-4UN-2A	4.8221	2	4.9964 +.0015	4.9304 - .0015	4.8221 +.0006	.0003	4	.0625
1	7518636	5.0000-4UN-3A	4.8287	1	5.0015	4.7746 + .0015		.0004	5	.078
3	7518637	5.0000-4UN-3A	4.8287	2	5.0000 +.0015	4.9370 - .0015	4.8287 +.0006	.0003	4	.0625

* 1. LO (Not Go) Thread Ring Gage 2. Truncated Thread Setting Plug Gage

ORDBA Form 20-1578, (OT) 4 May 61

Downloaded from http://www.everyspec.com

Table I. Tabulation of Design and Identification Data - Unified Standard Thread (Continued)

FIG. NO.	MARKING ON GAGE HANDLE				GAGE DIMENSIONS					
	MIL-STD PART NUMBER	THREAD DESIGNATION	LO PD / LO PD	1 / 2	MAJOR DIA / MAJOR DIA FULL PORTION	MINOR DIA / MAJOR DIA TRUNCATED PORTION	PITCH DIA	TOL ON LEAD	HALF ANGLE TOL	ROOT CLEAR
A	B	C	D	*	E	F	G	H	J	K
1	7518638	5.0000-6UN-2A	4.8781	1	4.9982	4.8420 + .0013		.0004	5	.052
3	7518639	5.0000-6UN-2A	4.8781	2	4.9969 +.0013	4.9503 - .0013	4.8781 +.0006	.0003	5	.0417
1	7518640	5.0000-6UN-3A	4.8839	1	5.0013	4.8478 + .0013		.0004	5	.052
3	7518641	5.0000-6UN-3A	4.8839	2	5.0000 +.0013	4.9561 - .0013	4.8839 +.0006	.0003	5	.0417
1	5220-751-6200	5.0000-12UN-2A	4.9372	1	4.9989	4.9192 + .0009		.0003	10	.026
3	5220-751-6201	5.0000-12UN-2A	4.9372	2	4.9980 +.0009	4.9733 - .0009	4.9372 +.0006	.0002	6	.0208
1	5220-751-6202	5.0000-12UN-3A	4.9409	1	5.0009	4.9229 + .0009		.0003	10	.026
3	5220-751-6203	5.0000-12UN-3A	4.9409	2	5.0000 +.0009	4.9770 - .0009	4.9409 +.0006	.0002	6	.0208
1	5220-751-6204	5.0000-16UN-2A	4.9515	1	4.9991	4.9380 + .0009		.0003	10	020
3	5220-751-6205	5.0000-16UN-2A	4.9515	2	4.9982 +.0009	4.9786 - .0009	4.9515 +.0006	.00015	8	.0156
1	5220-751-6206	5.0000-16UN-3A	4.9549	1	5.0009	4.9414 + .0009		.0003	10	.020
3	5220-751-6207	5.0000-16UN-3A	4.9549	2	5.0000 +.0009	4.9820 - .0009	4.9549 +.0006	.00015	8	.0156
1	7518642	5.1250-12UN-2A	5.0622	1	5.1239	5.0442 + .0009		.0003	10	.026
3	7518643	5.1250-12UN-2A	5.0622	2	5.1230 +.0009	5.0983 - .0009	5.0622 +.0006	.0002	6	.0208
1	7518644	5.1250-12UN-3A	5.0659	1	5.1259	5.0479 + .0009		.0003	10	.026
3	7518645	5.1250-12UN-3A	5.0659	2	5.1250 +.0009	5.1020 - .0009	5.0659 +.0006	.0002	6	.0208
1	7518646	5.1250-16UN-2A	5.0765	1	5.1241	5.0630 + .0009		.0003	10	.020
3	7518647	5.1250-16UN-2A	5.0765	2	5.1232 +.0009	5.1036 - .0009	5.0765 +.0006	.00015	8	.0156
1	7518648	5.1250-16UN-3A	5.0799	1	5.1259	5.0664 + .0009		.0003	10	.020
3	7518649	5.1250-16UN-3A	5.0799	2	5.1250 +.0009	5.1070 - .0009	5.0799 +.0006	.00015	8	.0156
1	7518650	5.2500-4UN-2A	5.0720	1	5.2479	5.0179 + .0015		.0004	5	.078
3	7518651	5.2500-4UN-2A	5.0720	2	5.2464 +.0015	5.1803 - .0015	5.0720 +.0006	.0003	4	.0625

* 1. LO (Not Go) Thread Ring Gage 2. Truncated Thread Setting Plug Gage

ORDBA Form 20-1578, (OT) 4 May 61

Downloaded from http://www.everyspec.com

Table I. Tabulation of Design and Identification Data - Unified Standard Thread (Continued)

FIG. NO.	MARKING ON GAGE HANDLE				GAGE DIMENSIONS					
	MIL-STD PART NUMBER	THREAD DESIGNATION	LO PD / LO PD	1 / 2	MAJOR DIA / MAJOR DIA FULL PORTION	MINOR DIA / MAJOR DIA TRUNCATED PORTION	PITCH DIA	TOL ON LEAD	HALF ANGLE TOL	ROOT CLEAR
A	B	C	D	*	E	F	G	H	J	K
1	7518652	5.2500-4UN-3A	5.0786	1	5.2515	5.0245 + .0015		.0004	5	.078
3	7518653	5.2500-4UN-3A	5.0786	2	5.2500 +.0015	5.1869 - .0015	5.0786 +.0006	.0003	4	.0625
1	5220-751-6212	5.2500-12UN-2A	5.1872	1	5.2489	5.1692 + .0009		.0003	10	.026
3	5220-751-6213	5.2500-12UN-2A	5.1872	2	5.2480 +.0009	5.2233 - .0009	5.1872 +.0006	.0002	6	.0208
1	5220-751-6214	5.2500-12UN-3A	5.1909	1	5.2509	5.1729 + .0009		.0003	10	.026
3	5220-751-6215	5.2500-12UN-3A	5.1909	2	5.2500 +.0009	5.2270 - .0009	5.1909 +.0006	.0002	6	.0208
1	5220-751-6216	5.2500-16UN-2A	5.2015	1	5.2491	5.1880 + .0009		.0003	10	.020
3	5220-751-6217	5.2500-16UN-2A	5.2015	2	5.2482 +.0009	5.2286 - .0009	5.2015 +.0006	.00015	8	.0156
1	5220-751-6218	5.2500-16UN-3A	5.2049	1	5.2509	5.1914 + .0009		.0003	10	.020
3	5220-751-6219	5.2500-16UN-3A	5.2049	2	5.2500 +.0009	5.2320 - .0009	5.2049 +.0006	.00015	8	.0156
1	7518654	5.3750-12UN-2A	5.3122	1	5.3739	5.2942 + .0009		.0003	10	.026
3	7518655	5.3750-12UN-2A	5.3122	2	5.3730 +.0009	5.3483 - .0009	5.3122 +.0006	.0002	6	.0208
1	7518656	5.3750-12UN-3A	5.3159	1	5.3759	5.2979 + .0009		.0003	10	.026
3	7518657	5.3750-12UN-3A	5.3159	2	5.3750 +.0009	5.3520 - .0009	5.3159 +.0006	.0002	6	.0208
1	7518658	5.3750-16UN-2A	5.3265	1	5.3741	5.3130 + .0009		.0003	10	.020
3	7518659	5.3750-16UN-2A	5.3265	2	5.3732 +.0009	5.3536 - .0009	5.3265 +.0006	.00015	8	.0156
1	7518660	5.3750-16UN-3A	5.3299	1	5.3759	5.3164 + .0009		.0003	10	.020
3	7518661	5.3750-16UN-3A	5.3299	2	5.3750 +.0009	5.3570 - .0009	5.3299 +.0006	.00015	8	.0156
1	7518662	5.5000-4UN-2A	5.3219	1	5.4979	5.2678 + .0015		.0004	5	.078
3	7518663	5.5000-4UN-2A	5.3219	2	5.4964 +.0015	5.4302 - .0015	5.3219 +.0006	.0003	4	.0625
1	7518664	5.5000-4UN-3A	5.3285	1	5.5015	5.2744 + .0015		.0004	5	.078
3	7518665	5.5000-4UN-3A	5.3285	2	5.5000 +.0015	5.4368 - .0015	5.3285 +.0006	.0003	4	.0625

* 1. LO (Not Go) Thread Ring Gage 2. Truncated Thread Setting Plug Gage

ORDBA Form 20-1578, (OT) 4 May 61

Downloaded from http://www.everyspec.com

Table I. Tabulation of Design and Identification Data - Unified Standard Thread (Continued)

FIG. NO.	MARKING ON GAGE HANDLE				GAGE DIMENSIONS					
	MIL-STD PART NUMBER	THREAD DESIGNATION	LO PD / LO PD	1 / 2	MAJOR DIA / MAJOR DIA FULL PORTION	MINOR DIA / MAJOR DIA TRUNCATED PORTION	PITCH DIA	TOL ON LEAD	HALF ANGLE TOL	ROOT CLEAR
A	B	C	D	*	E	F	G	H	J	K
1	5220-751-6224	5.5000-12UN-2A	5.4372	1	5.4989	5.4192 + .0009		.0003	10	.026
3	5220-751-6225	5.5000-12UN-2A	5.4372	2	5.4980 +.0009	5.4733 - .0009	5.4372 +.0006	.0002	6	.0208
1	5220-751-6226	5.5000-12UN-3A	5.4409	1	5.5009	5.4229 + .0009		.0003	10	.026
3	5220-751-6227	5.5000-12UN-3A	5.4409	2	5.5000 +.0009	5.4770 - .0009	5.4409 +.0006	.0002	6	.0208
1	5220-751-6228	5.5000-16UN-2A	5.4515	1	5.4991	5.4380 + .0009		.0003	10	.020
3	5220-751-6229	5.5000-16UN-2A	5.4515	2	5.4982 +.0009	5.4786 - .0009	5.4515 +.0006	.00015	8	.0156
1	5220-751-6230	5.5000-16UN-3A	5.4549	1	5.5009	5.4414 + .0009		.0003	10	.020
3	5220-751-6231	5.5000-16UN-3A	5.4549	2	5.5000 +.0009	5.4820 - .0009	5.4549 +.0006	.00015	8	.0156
1	7518666	5.6250-12UN-2A	5.5619	1	5.6238	5.5439 + .0009		.0003	10	.026
3	7518667	5.6250-12UN-2A	5.5619	2	5.6229 +.0009	5.5980 - .0009	5.5619 +.0006	.0002	6	.0208
1	7518668	5.6250-12UN-3A	5.5657	1	5.6259	5.5477 + .0009		.0003	10	.026
3	7518669	5.6250-12UN-3A	5.5657	2	5.6250 +.0009	5.6018 - .0009	5.5657 +.0006	.0002	6	.0208
1	7518670	5.6250-16UN-2A	5.5763	1	5.6240	5.5628 + .0009		.0003	10	.020
3	7518671	5.6250-16UN-2A	5.5763	2	5.6231 +.0009	5.6034 - .0009	5.5763 +.0006	.00015	8	.0156
1	7518672	5.6250-16UN-3A	5.5797	1	5.6259	5.5662 + .0009		.0003	10	.020
3	7518673	5.6250-16UN-3A	5.5797	2	5.6250 +.0009	5.6068 - .0009	5.5797 +.0006	.00015	8	.0156
1	7518674	5.7500-4UN-2A	5.5717	1	5.7478	5.5176 + .0015		.0004	5	.078
3	7518675	5.7500-4UN-2A	5.5717	2	5.7463 +.0015	5.6800 - .0015	5.5717 +.0006	.0003	4	.0625
1	7518676	5.7500-4UN-3A	5.5784	1	5.7515	5.5243 + .0015		.0004	5	.078
3	7518677	5.7500-4UN-3A	5.5784	2	5.7500 +.0015	5.6867 - .0015	5.5784 +.0006	.0003	4	.0625
1	5220-751-6236	5.7500-12UN-2A	5.6869	1	5.7488	5.6689 + .0009		.0003	10	.026
3	5220-751-6237	5.7500-12UN-2A	5.6869	2	5.7479 +.0009	5.7230 - .0009	5.6869 +.0006	.0002	6	.0208

* 1. LO (Not Go) Thread Ring Gage 2. Truncated Thread Setting Plug Gage

ORDBA Form 20-1578, (OT) 4 May 61

Downloaded from http://www.everyspec.com

Table I. Tabulation of Design and Identification Data - Unified Standard Thread (Continued)

FIG. NO.	MARKING ON GAGE HANDLE				GAGE DIMENSIONS					
	MIL-STD PART NUMBER	THREAD DESIGNATION	LO PD / LO PD	1 / 2	MAJOR DIA / MAJOR DIA FULL PORTION	MINOR DIA / MAJOR DIA TRUNCATED PORTION	PITCH DIA	TOL ON LEAD	HALF ANGLE TOL	ROOT CLEAR
A	B	C	D	*	E	F	G	H	J	K
1	5220-751-6238	5.7500-12UN-3A	5.6907	1	5.7509	5.6727 + .0009		.0003	10	.026
3	5220-751-6239	5.7500-12UN-3A	5.6907	2	5.7500 +.0009	5.7268 - .0009	5.6907 +.0006	.0002	6	.0208
1	5220-751-6240	5.7500-16UN-2A	5.7013	1	5.7490	5.6878 + .0009		.0003	10	.020
3	5220-751-6241	5.7500-16UN-2A	5.7013	2	5.7481 +.0009	5.7284 - .0009	5.7013 +.0006	.00015	8	.0156
1	5220-751-6242	5.7500-16UN-3A	5.7047	1	5.7509	5.6912 + .0009		.0003	10	.020
3	5220-751-6243	5.7500-16UN-3A	5.7047	2	5.7500 +.0009	5.7318 - .0009	5.7047 +.0006	.00015	8	.0156
1	7518678	5.8750-12UN-2A	5.8119	1	5.8738	5.7939 + .0009		.0003	10	.026
3	7518679	5.8750-12UN-2A	5.8119	2	5.8729 +.0009	5.8480 - .0009	5.8119 +.0006	.0002	6	.0208
1	7518680	5.8750-12UN-3A	5.8157	1	5.8759	5.7977 + .0009		.0003	10	.026
3	7518681	5.8750-12UN-3A	5.8157	2	5.8750 +.0009	5.8518 - .0009	5.8157 +.0006	.0002	6	.0208
1	7518682	5.8750-16UN-2A	5.8263	1	5.8740	5.8128 + .0009		.0003	10	.020
3	7518683	5.8750-16UN-2A	5.8263	2	5.8731 +.0009	5.8534 - .0009	5.8263 +.0006	.00015	8	.0156
1	7518684	5.8750-16UN-3A	5.8297	1	5.8759	5.8162 + .0009		.0003	10	.020
3	7518685	5.8750-16UN-3A	5.8297	2	5.8750 +.0009	5.8568 - .0009	5.8297 +.0006	.00015	8	.0156
1	7518686	6.0000-4UN-2A	5.8215	1	5.9978	5.7674 + .0015		.0004	5	.078
3	7518687	6.0000-4UN-2A	5.8215	2	5.9963 +.0015	5.9298 - .0015	5.8215 +.0006	.0003	4	.0625
1	7518688	6.0000-4UN-3A	5.8283	1	6.0015	5.7742 + .0015		.0004	5	.078
3	7518689	6.0000-4UN-3A	5.8283	2	6.0000 +.0015	5.9366 - .0015	5.8283 +.0006	.0003	4	.0625
1	5220-751-6248	6.0000-12UN-2A	5.9369	1	5.9988	5.9189 + .0009		.0003	10	.026
3	5220-751-6249	6.0000-12UN-2A	5.9369	2	5.9979 +.0009	5.9730 - .0009	5.9369 +.0006	.0002	6	.0208
1	5220-751-6250	6.0000-12UN-3A	5.9407	1	6.0009	5.9227 + .0009		.0003	10	.026
3	5220-751-6251	6.0000-12UN-3A	5.9407	2	6.0000 +.0009	5.9768 - .0009	5.9407 +.0006	.0002	6	.0208

* 1. LO (Not Go) Thread Ring Gage 2. Truncated Thread Setting Plug Gage

ORDBA Form 20-1578, (OT) 4 May 61

Downloaded from http://www.everyspec.com

Table I. Tabulation of Design and Identification Data - Unified Standard Thread (Continued)

FIG. NO.	MARKING ON GAGE HANDLE				GAGE DIMENSIONS					
	MIL-STD PART NUMBER	THREAD DESIGNATION	LO PD / LO PD	1 / 2	MAJOR DIA / MAJOR DIA FULL PORTION	MINOR DIA / MAJOR DIA TRUNCATED PORTION	PITCH DIA	TOL ON LEAD	HALF ANGLE TOL	ROOT CLEAR
A	B	C	D	*	E	F	G	H	J	K
1	5220-751-6252	6.0000-16UN-2A	5.9513	1	5.9990	5.9378 + .0009		.0003	10	.019
3	5220-751-6253	6.0000-16UN-2A	5.9513	2	5.9981 +.0009	5.9784 - .0009	5.9513 +.0006	.00015	8	.0156
1	5220-751-6254	6.0000-16UN-3A	5.9547	1	6.0009	5.9412 + .0009		.0003	10	.019
3	5220-751-6255	6.0000-16UN-3A	5.9547	2	6.0000 +.0009	5.9818 - .0009	5.9547 +.0006	.00015	8	.0156

* 1. LO (Not Go) Thread Ring Gage 2. Truncated Thread Setting Plug Gage

ORDBA Form 20-1578. (OT) 4 May 61

Downloaded from http://www.everyspec.com

ORDBA Form 20-1577, (OT) 4 May 61

Table II. Tabulation of Design and Identification Data - American National Standard Thread

FIGURE NO.	MARKING ON GAGE HANDLE				GAGE DIMENSIONS					
	MIL-STD PART NUMBER	THREAD DESIGNATION	LO PD	1	MAJOR DIA	MINOR DIA	———	TOL ON LEAD	HALF ANGLE TOL	ROOT CLEAR
			LO PD	2	MAJOR DIA FULL PORTION	MAJOR DIA TRUNCATED PORTION	PITCH DIA			
			MINOR DIA	3	———	PLAIN PLUG DIA	———	—	—	CHAM
			MINOR DIA	4	———	PLAIN PLUG DIA	———		—	CHAM
A	B	C	D	*	E	F	G	H	J	K
1	5220-751-1770	(0) .060-80NF-1	.0488	1	.0593	.0469 + .0003		.0002	30	.004
2	5220-751-1771	(0) .060-80NF-1	.0488	2	.0576 +.0003	.0542 - .0003	.0488 + .0002	.0001	20	.0031
4	5220-751-1772		.0469	3		.04690-.00004				.008
5	5220-751-1773		.0472	4		.04720+.00004				.008
1	5220-751-1774	(0) .060-80NF-2	.0502	1	.0600	.0475 + .0003		.0002	30	.004
2	5220-751-1775	(0) .060-80NF-2	.0502	2	.0590 +.0003	.0556 - .0003	.0502 + .0002	.0001	20	.0031
4	5220-751-1776		.0475	3		.04750-.00004				.008
5	5220-751-1777		.0478	4		.04780+.00004				.008
1	5220-751-5364	(0) .060-80UNF-3A-3	.0506	1	.0600	.0479 + .0003		.0002	30	.004
2	5220-751-5365	(0) .060-80UNF-3A-3	.0506	2	.0594 +.0003	.0560 - .0003	.0506 + .0002	.0001	20	.0031
4	5220-751-1780		.0479	3		.04790-.00004				.008
5	5220-751-1781		.0482	4		.04820+.00004				.008
1	5220-751-1782	(1) .073-64NC-1	.0596	1	.0723	.0562 + .0004		.0002	30	.005
2	5220-751-1783	(1) .073-64NC-1	.0596	2	.0710 +.0004	.0664 - .0004	.0596 + .0002	.0001	20	.0039
4	5220-751-6774		.0562	3		.05620-.00004				.008
5	5220-751-6775		.0566	4		.05660+.00004				.008
1	5220-751-1786	(1) .073-64NC-2	.0610	1	.0730	.0576 + .0004		.0002	30	.005
2	5220-751-1787	(1) .073-64NC-2	.0610	2	.0724 +.0004	.0678 - .0004	.0610 + .0002	.0001	20	.0039
4	5220-751-1788		.0576	3		.05760-.00004				.008
5	5220-751-1789		.0580	4		.05800+.00004				.008
1	5220-751-1790	(1) .073-64NC-3	.0615	1	.0733	.0581 + .0004		.0002	30	.005
2	5220-751-1791	(1) .073-64NC-3	.0615	2	.0729 +.0004	.0683 - .0004	.0615 + .0002	.0001	20	.0039
4	5220-751-1792		.0581	3		.05810-.00004				.008
5	5220-751-1793		.0585	4		.05850+.00004				.008

* 1. LO (Not Go) Thread Ring Gage
2. Truncated Thread Setting Plug Gage
3. Go Plain Plug Acceptance Check Gage for Minor Diameter
4. Not Go Plain Plug Acceptance Check Gage for Minor Diameter

Downloaded from http://www.everyspec.com

ORDBA Form 20-1577, (OT) 4 May 61

Table II. Tabulation of Design and Identification Data - American National Standard Thread (Continued)

FIGURE NO.	MARKING ON GAGE HANDLE: MIL-STD PART NUMBER	THREAD DESIGNATION	LO PD / LO PD / MINOR DIA / MINOR DIA	*	GAGE DIMENSIONS: MAJOR DIA / MAJOR DIA FULL PORTION	MINOR DIA / MAJOR DIA TRUNCATED PORTION / PLAIN PLUG DIA / PLAIN PLUG DIA	PITCH DIA	TOL ON LEAD	HALF ANGLE TOL	ROOT CLEAR CHAM / CHAM
A	B	C	D	*	E	F	G	H	J	K
1	5220-751-1794	(1) .073-72NF-1	.0608	1	.0723	.0585 + .0003		.0002	30	.004
2	5220-751-1795	(1) .073-72NF-1	.0608	2	.0708 +.0003	.0668 - .0003	.0608 + .0002	.0001	20	.0035
4	5220-751-1796		.0585	3		.05850 - .00004				.008
5	5220-751-1797		.0588	4		.05880 + .00004				.008
1	5220-751-1798	(1) .073-72NF-2	.0622	1	.0730	.0592 + .0003		.0002	30	.004
2	5220-751-1799	(1) .073-72NF-2	.0622	2	.0722 +.0003	.0682 - .0003	.0622 + .0002	.0001	20	.0035
4	5220-751-1800		.0592	3		.05920 - .00004				.008
5	5220-751-1801		.0595	4		.05950 + .00004				.008
1	5220-751-1802	(1) .073-72NF-3	.0627	1	.0730	.0597 + .0003		.0002	30	.004
2	5220-751-1803	(1) .073-72NF-3	.0627	2	.0727 +.0003	.0687 - .0003	.0627 + .0002	.0001	20	.0035
4	5220-751-1804		.0597	3		.05970 - .00004				.008
5	5220-751-1805		.0600	4		.06000 + .00004				.008
1	5220-751-1806	(2) .086-56NC-1	.0708	1	.0852	.0669 + .0004		.0002	30	.006
2	5220-751-1807	(2) .086-56NC-1	.0708	2	.0841 +.0004	.0785 - .0004	.0708 + .0002	.0001	20	.0045
4	5220-751-6776		.0669	3		.06690 - .00004				.008
5	5220-751-6777		.0673	4		.06730 + .00004				.008
1	5220-751-1810	(2) .086-56NC-2	.0724	1	.0861	.0685 + .0004		.0002	30	.006
2	5220-751-1811	(2) .086-56NC-2	.0724	2	.0857 +.0004	.0801 - .0004	.0724 + .0002	.0001	20	.0045
4	5220-751-1812		.0685	3		.06850 - .00004				.008
5	5220-751-1813		.0689	4		.06890 + .00004				.008
1	5220-751-1814	(2) .086-56NC-3	.0729	1	.0864	.0690 + .0004		.0002	30	.006
2	5220-751-1815	(2) .086-56NC-3	.0729	2	.0860 +.0004	.0806 - .0004	.0729 + .0002	.0001	20	.0045
4	5220-751-1816		.0690	3		.06900 - .00004				.008
5	5220-751-1817		.0694	4		.06940 + .00004				.008

* 1. LO (Not Go) Thread Ring Gage
2. Truncated Thread Setting Plug Gage
3. Go Plain Plug Acceptance Check Gage for Minor Diameter
4. Not Go Plain Plug Acceptance Check Gage for Minor Diameter

Downloaded from http://www.everyspec.com

ORDBA Form 20-1577, (OT) 4 May 61

Table II. Tabulation of Design and Identification Data - American National Standard Thread (Continued)

FIGURE NO.	MARKING ON GAGE HANDLE				GAGE DIMENSIONS					
	MIL-STD PART NUMBER	THREAD DESIGNATION	LO PD	1	MAJOR DIA	MINOR DIA	———	TOL ON LEAD	HALF ANGLE TOL	ROOT CLEAR
			LO PD	2	MAJOR DIA FULL PORTION	MAJOR DIA TRUNCATED PORTION	PITCH DIA			
			MINOR DIA	3	———	PLAIN PLUG DIA	———	—	—	CHAM
			MINOR DIA	4	———	PLAIN PLUG DIA	———		—	CHAM
A	B	C	D	*	E	F	G	H	J	K
1	5220-751-1818	(2) .086-64NF-1	.0726	1	.0853	.0696 + .0004		.0002	30	.005
2	5220-751-1819	(2) .086-64NF-1	.0726	2	.0840 +.0004	.0794 - .0004	.0726 + .0002	.0001	20	.0039
4	5220-751-1820		.0696	3		.06960 - .00004				.008
5	5220-751-1821		.0700	4		.07000 + .00004				.008
1	5220-751-1822	(2) .086-64NF-2	.0740	1	.0860	.0706 + .0004		.0002	30	.005
2	5220-751-1823	(2) .086-64NF-2	.0740	2	.0854 +.0004	.0808 - .0004	.0740 + .0002	.0001	20	.0039
4	5220-751-1824		.0706	3		.07060 - .00004				.008
5	5220-751-1825		.0710	4		.07100 + .00004				.008
1	5220-751-1826	(2) .086-64NF-3	.0745	1	.0863	.0711 + .0004		.0002	30	.005
2	5220-751-1827	(2) .086-64NF-3	.0745	2	.0859 +.0004	.0813 - .0004	.0745 + .0002	.0001	20	.0039
4	5220-751-1828		.0711	3		.07110 - .00004				.008
5	5220-751-1829		.0715	4		.07150 + .00004				.008
1	5220-751-1830	(3) .099-48NC-1	.0815	1	.0981	.0770 + .0004		.0002	30	.007
2	5220-751-1831	(3) .099-48NC-1	.0815	2	.0971 +.0004	.0905 - .0004	.0815 + .0002	.0001	18	.0052
4	5220-751-6778		.0770	3		.07700 - .00004				.015
5	5220-751-6779		.0774	4		.07740 + .00004				.015
1	5220-751-1834	(3) .099-48NC-2	.0833	1	.0993	.0788 + .0004		.0002	30	.007
2	5220-751-1835	(3) .099-48NC-2	.0833	2	.0989 +.0004	.0923 - .0004	.0833 + .0002	.0001	18	.0052
4	5220-751-1836		.0788	3		.07880 - .00004				.015
5	5220-751-1837		.0792	4		.07920 + .00004				.015
1	5220-751-1838	(3) .099-48NC-3	.0839	1	.0994	.0794 + .0004		.0002	30	.007
2	5220-751-1839	(3) .099-48NC-3	.0839	2	.0990 +.0004	.0929 - .0004	.0839 + .0002	.0001	18	.0052
4	5220-751-1840		.0794	3		.07940 - .00004				.015
5	5220-751-1841		.0798	4		.07980 + .00004				.015

* 1 LO (Not Go) Thread Ring Gage
2. Truncated Thread Setting Plug Gage
3. Go Plain Plug Acceptance Check Gage for Minor Diameter
4. Not Go Plain Plug Acceptance Check Gage for Minor Diameter

Downloaded from http://www.everyspec.com

ORDBA Form 20-1577, (OT) 4 May 61

Table II. Tabulation of Design and Identification Data - American National Standard Thread (Continued)

FIGURE NO.	MARKING ON GAGE HANDLE: MIL-STD PART NUMBER	THREAD DESIGNATION	LO PD / LO PD / MINOR DIA / MINOR DIA	*	GAGE DIMENSIONS: MAJOR DIA / MAJOR DIA FULL PORTION / — / —	MINOR DIA / MAJOR DIA TRUNCATED PORTION / PLAIN PLUG DIA / PLAIN PLUG DIA	— / PITCH DIA / — / —	TOL ON LEAD	HALF ANGLE TOL / — / —	ROOT CLEAR / CHAM / CHAM
A	B	C	D	*	E	F	G	H	J	K
1	5220-751-1842	(3) .099-56NF-1	.0838	1	.0982	.0803 + .0004		.0002	30	.006
2	5220-751-1843	(3) .099-56NF-1	.0838	2	.0971 +.0004	.0915 - .0004	.0838 +.0002	.0001	20	.0045
4	5220-751-1844		.0803	3		.08030 - .00004				.015
5	5220-751-1845		.0807	4		.08070 + .00004				.015
1	5220-751-1846	(3) .099-56NF-2	.0854	1	.0991	.0815 + .0004		.0002	30	.006
2	5220-751-1847	(3) .099-56NF-2	.0854	2	.0987 +.0004	.0931 - .0004	.0854 +.0002	.0001	20	.0045
4	5220-751-1848		.0815	3		.08150 - .00004				.015
5	5220-751-1849		.0819	4		.08190 + .00004				.015
1	5220-751-1850	(3) .099-56NF-3	.0859	1	.0994	.0820 + .0004		.0002	30	.006
2	5220-751-1851	(3) .099-56NF-3	.0859	2	.0990 +.0004	.0936 - .0004	.0859 +.0002	.0001	20	.0045
4	5220-751-1852		.0820	3		.08200 - .00004				.015
5	5220-751-1853		.0824	4		.08240 + .00004				.015
1	5220-751-1854	(4) .112-40NC-1	.0914	1	.1110	.0860 + .0004		.0002	20	.008
2	5220-751-1855	(4) .112-40NC-1	.0914	2	.1102 +.0004	.1022 - .0004	.0914 +.0002	.0001	15	.0062
4	5220-751-1856		.0860	3		.08600 - .00004				.015
5	5220-751-1857		.0864	4		.08640 + .00004				.015
1	5220-751-1858	(4) .112-40NC-2	.0934	1	.1124	.0880 + .0004		.0002	20	.008
2	5220-751-1859	(4) .112-40NC-2	.0934	2	.1120 +.0004	.1042 - .0004	.0934 +.0002	.0001	15	.0062
4	5220-751-1860		.0880	3		.08800 - .00004				.015
5	5220-751-1861		.0884	4		.08840 + .00004				.015
1	5220-751-1862	(4) .112-40NC-3	.0941	1	.1124	.0887 + .0004		.0002	20	.008
2	5220-751-1863	(4) .112-40NC-3	.0941	2	.1120 +.0004	.1049 - .0004	.0941 +.0002	.0001	15	.0062
4	5220-751-1864		.0887	3		.08870 - .00004				.015
5	5220-751-1865		.0891	4		.08910 + .00004				.015

* 1. LO (Not Go) Thread Ring Gage
2. Truncated Thread Setting Plug Gage
3. Go Plain Plug Acceptance Check Gage for Minor Diameter
4. Not Go Plain Plug Acceptance Check Gage for Minor Diameter

Downloaded from http://www.everyspec.com

ORDBA Form 20-1577, (OT) 4 May 61

Table II. Tabulation of Design and Identification Data - American National Standard Thread (Continued)

FIGURE NO.	MARKING ON GAGE HANDLE: MIL-STD PART NUMBER	THREAD DESIGNATION	LO PD / LO PD / MINOR DIA / MINOR DIA		GAGE DIMENSIONS: MAJOR DIA / MAJOR DIA FULL PORTION	MINOR DIA / MAJOR DIA TRUNCATED PORTION / PLAIN PLUG DIA / PLAIN PLUG DIA	PITCH DIA	TOL ON LEAD	HALF ANGLE TOL	ROOT CLEAR / CHAM / CHAM
				1	MAJOR DIA	MINOR DIA	———	TOL ON LEAD	HALF ANGLE TOL	ROOT CLEAR
				2	MAJOR DIA FULL PORTION	MAJOR DIA TRUNCATED PORTION	PITCH DIA			
			MINOR DIA	3	———	PLAIN PLUG DIA	———	—	—	CHAM
			MINOR DIA	4	———	PLAIN PLUG DIA	———		—	CHAM
A	B	C	D	*	E	F	G	H	J	K
1	5220-751-1866	(4) .112-48NF-1	.0945	1	.1111	.0901 + .0004		.0002	30	.007
2	5220-751-1867	(4) .112-48NF-1	.0945	2	.1101 +.0004	.1035 - .0004	.0945 +.0002	.0001	18	.0052
4	5220-751-1868		.0901	3		.09010 -.00004				.015
5	5220-751-1869		.0905	4		.09050 +.00004				.015
1	5220-751-1870	(4) .112-48NF-2	.0963	1	.1123	.0918 + .0004		.0002	30	.007
2	5220-751-1871	(4) .112-48NF-2	.0963	2	.1119 +.0004	.1053 - .0004	.0963 +.0002	.0001	18	.0052
4	5220-751-1872		.0918	3		.09180 -.00004				.015
5	5220-751-1873		.0922	4		.09220 +.00004				.015
1	5220-751-1874	(4) .112-48NF-3	.0969	1	.1124	.0924 + .0004		.0002	30	.007
2	5220-751-1875	(4) .112-48NF-3	.0969	2	.1120 +.0004	.1059 - .0004	.0969 +.0002	.0001	18	.0052
4	5220-751-1876		.0924	3		.09240 -.00004				.015
5	5220-751-1877		.0928	4		.09280 +.00004				.015
1	5220-751-1878	(5) .125-40NC-1	.1044	1	.1240	.0990 + .0004		.0002	20	.008
2	5220-751-1879	(5) .125-40NC-1	.1044	2	.1232 +.0004	.1152 - .0004	.1044 +.0002	.0001	15	.0062
4	5220-751-1880		.0990	3		.09900 -.00004				.015
5	5220-751-1881		.0994	4		.09940 +.00004				.015
1	5220-751-1882	(5) .125-40NC-2	.1064	1	.1254	.1010 + .0004		.0002	20	.008
2	5220-751-1883	(5) .125-40NC-2	.1064	2	.1250 +.0004	.1172 - .0004	.1064 +.0002	.0001	15	.0062
4	5220-751-1884		.1010	3		.10100 -.00004				.015
5	5220-751-1885		.1014	4		.10140 +.00004				.015
1	5220-751-1886	(5) .125-40NC-3	.1071	1	.1254	.1017 + .0004		.0002	20	.008
2	5220-751-1887	(5) .125-40NC-3	.1071	2	.1250 +.0004	.1179 - .0004	.1071 +.0002	.0001	15	.0062
4	5220-751-1888		.1017	3		.10170 -.00004				.015
5	5220-751-1889		.1021	4		.10210 +.00004				.015

* 1. LO (Not Go) Thread Ring Gage
2. Truncated Thread Setting Plug Gage
3. Go Plain Plug Acceptance Check Gage for Minor Diameter
4. Not Go Plain Plug Acceptance Check Gage for Minor Diameter

Downloaded from http://www.everyspec.com

ORDBA Form 20-1577, (OT) 4 May 61

Table II. Tabulation of Design and Identification Data - American National Standard Thread (Continued)

FIGURE NO.	MARKING ON GAGE HANDLE: MIL-STD PART NUMBER	THREAD DESIGNATION	LO PD / LO PD / MINOR DIA / MINOR DIA	*	GAGE DIMENSIONS: MAJOR DIA / MAJOR DIA FULL PORTION / — / —	MINOR DIA / MAJOR DIA TRUNCATED PORTION / PLAIN PLUG DIA / PLAIN PLUG DIA	— / PITCH DIA / — / —	TOL ON LEAD	HALF ANGLE TOL	ROOT CLEAR / CHAM / CHAM
A	B	C	D	*	E	F	G	H	J	K
1	5220-751-1890	(5) .125-44NF-1	.1061	1	.1241	.1012 + .0004		.0002	20	007
2	5220-751-1891	(5) .125-44NF-1	.1061	2	.1232 +.0004	.1159 - .0004	.1061 +.0002	.0001	15	.0057
4	5220-751-1892		.1012	3		.10120 -.00004				.015
5	5220-751-1893		.1016	4		.10160 +.00004				.015
1	5220-751-1894	(5) .125-44NF-2	.1079	1	.1254	.1030 + .0004		.0002	20	.007
2	5220-751-1895	(5) .125-44NF-2	.1079	2	.1250 +.0004	.1177 - .0004	.1079 +.0002	.0001	15	.0057
4	5220-751-1896		.1030	3		.10300 -.00004				.015
5	5220-751-1897		.1034	4		.10340 +.00004				.015
1	5220-751-1898	(5) .125-44NF-3	.1086	1	.1254	.1037 + .0004		.0002	20	.007
2	5220-751-1899	(5) .125-44NF-3	.1086	2	.1250 +.0004	.1184 - .0004	.1086 +.0002	.0001	15	.0057
4	5220-751-1900		.1037	3		.10370 -.00004				.015
5	5220-751-1901		.1041	4		.10410 +.00004				.015
1	5220-751-1902	(6) .138-32NC-1	.1128	1	.1369	.1060 + .0005		.0003	15	.010
2	5220-751-1903	(6) .138-32NC-1	.1128	2	.1362 +.0005	.1263 - .0005	.1128 +.0003	.0001	12	.0078
4	5220-751-1904		.1060	3		.10600 -.00004				.015
5	5220-751-1905		.1065	4		.10650 +.00004				.015
1	5220-751-1906	(6) .138-32NC-2	.1150	1	.1385	.1082 + .0005		.0003	15	.010
2	5220-751-1907	(6) .138-32NC-2	.1150	2	.1380 +.0005	.1285 - .0005	.1150 +.0003	.0001	12	.0078
4	5220-751-1908		.1082	3		.10820 -.00004				.015
5	5220-751-1909		.1087	4		.10870 +.00004				.015
1	5220-751-1910	(6) .138-32NC-3	.1158	1	.1385	.1090 + .0005		.0003	15	.010
2	5220-751-1911	(6) .138-32NC-3	.1158	2	.1380 +.0005	.1293 - .0005	.1158 +.0003	.0001	12	.0078
4	5220-751-1912		.1090	3		.10900 -.00004				.015
5	5220-751-1913		.1095	4		.10950 +.00004				.015

* 1. LO (Not Go) Thread Ring Gage
2. Truncated Thread Setting Plug Gage
3. Go Plain Plug Acceptance Check Gage for Minor Diameter
4. Not Go Plain Plug Acceptance Check Gage for Minor Diameter

Downloaded from http://www.everyspec.com

ORDBA Form 20-1577, (OT) 4 May 61

Table II. Tabulation of Design and Identification Data - American National Standard Thread (Continued)

FIGURE NO.	MARKING ON GAGE HANDLE				GAGE DIMENSIONS					
	MIL-STD PART NUMBER	THREAD DESIGNATION	LO PD	1	MAJOR DIA	MINOR DIA	———	TOL ON LEAD	HALF ANGLE TOL	ROOT CLEAR
			LO PD	2	MAJOR DIA FULL PORTION	MAJOR DIA TRUNCATED PORTION	PITCH DIA			
			MINOR DIA	3	———	PLAIN PLUG DIA	———	—	—	CHAM
			MINOR DIA	4	———	PLAIN PLUG DIA	———		—	CHAM
A	B	C	D	*	E	F	G	H	J	K
1	5220-751-1914	(6) .138-40NF-1	.1174	1	.1370	.1120 + .0004		.0002	20	.008
2	5220-751-1915	(6) .138-40NF-1	.1174	2	.1362 +.0004	.1282 - .0004	.1174 +.0002	.0001	15	.0062
4	5220-751-1916		.1120	3		.11200 -.00004				.015
5	5220-751-1917		.1124	4		.11240 +.00004				.015
1	5220-751-1918	(6) .138-40NF-2	.1194	1	.1384	.1140 + .0004		.0002	20	.008
2	5220-751-1919	(6) .138-40NF-2	.1194	2	.1380 +.0004	.1302 - .0004	.1194 +.0002	.0001	15	.0062
4	5220-751-1920		.1140	3		.11400 -.00004				.015
5	5220-751-1921		.1144	4		.11440 +.00004				.015
1	5220-751-1922	(6) .138-40NF-3	.1201	1	.1384	.1147 + .0004		.0002	20	.008
2	5220-751-1923	(6) .138-40NF-3	.1201	2	.1380 +.0004	.1309 - .0004	.1201 +.0002	.0001	15	.0062
4	5220-751-1924		.1147	3		.11470 -.00004				.015
5	5220-751-1925		.1151	4		.11510 +.00004				.015
1	5220-751-1926	(8) .164-32NC-1	.1388	1	.1629	.1320 + .0005		.0003	15	.010
2	5220-751-1927	(8) .164-32NC-1	.1388	2	.1622 +.0005	.1523 - .0005	.1388 +.0003	.0001	12	.0078
4	5220-751-1928		.1320	3		.13200 -.00004				.015
5	5220-751-1929		.1325	4		.13250 +.00004				.015
1	5220-751-1930	(8) .164-32NC-2	.1410	1	.1645	.1342 + .0005		.0003	15	.010
2	5220-751-1931	(8) .164-32NC-2	.1410	2	.1640 +.0005	.1545 - .0005	.1410 +.0003	.0001	12	.0078
4	5220-751-1932		.1342	3		.13420 -.00004				.015
5	5220-751-1933		.1347	4		.13470 +.00004				.015
1	5220-751-1934	(8) .164-32NC-3	.1418	1	.1645	.1350 + .0005		.0003	15	.010
2	5220-751-1935	(8) .164-32NC-3	.1418	2	.1640 +.0005	.1553 - .0005	.1418 +.0003	.0001	12	.0078
4	5220-751-1936		.1350	3		.13500 -.00004				.015
5	5220-751-1937		.1355	4		.13550 +.00004				.015

* 1. LO (Not Go) Thread Ring Gage
2. Truncated Thread Setting Plug Gage
3. Go Plain Plug Acceptance Check Gage for Minor Diameter
4. Not Go Plain Plug Acceptance Check Gage for Minor Diameter

Downloaded from http://www.everyspec.com

ORDBA Form 20-1577, (OT) 4 May 61

Table II. Tabulation of Design and Identification Data - American National Standard Thread (Continued)

FIGURE NO.	MARKING ON GAGE HANDLE: MIL-STD PART NUMBER	MARKING ON GAGE HANDLE: THREAD DESIGNATION	MARKING ON GAGE HANDLE: LO PD / LO PD / MINOR DIA / MINOR DIA	*	GAGE DIMENSIONS: MAJOR DIA / MAJOR DIA FULL PORTION	GAGE DIMENSIONS: MINOR DIA / MAJOR DIA TRUNCATED PORTION / PLAIN PLUG DIA / PLAIN PLUG DIA	GAGE DIMENSIONS: PITCH DIA	GAGE DIMENSIONS: TOL ON LEAD	GAGE DIMENSIONS: HALF ANGLE TOL	GAGE DIMENSIONS: ROOT CLEAR / CHAM / CHAM
A	B	C	D	*	E	F	G	H	J	K
1	5220-751-1938	(8) .164-36NF-1	.1413	1	.1629	.1353 + .0004		.0002	20	.009
2	5220-751-1939	(8) .164-36NF-1	.1413	2	.1621 +.0004	.1533 - .0004	.1413 +.0002	.0001	12	.0069
4	5220-751-1940		.1353	3		.13530 -.00004				.015
5	5220-751-1941		.1357	4		.13570 +.00004				.015
1	5220-751-1942	(8) .164-36NF-2	.1435	1	.1644	.1375 + .0004		.0002	20	.009
2	5220-751-1943	(8) .164-36NF-2	.1435	2	.1640 +.0004	.1555 - .0004	.1435 +.0002	.0001	12	.0069
4	5220-751-1944		.1375	3		.13750 -.00004				.015
5	5220-751-1945		.1379	4		.13790 +.00004				.015
1	5220-751-1946	(8) .164-36NF-3	.1442	1	.1644	.1382 + .0004		.0002	20	.009
2	5220-751-1947	(8) .164-36NF-3	.1442	2	.1640 +.0004	.1562 - .0004	.1442 +.0002	.0001	12	.0069
4	5220-751-1948		.1382	3		.13820 -.00004				.015
5	5220-751-1949		.1386	4		.13860 +.00004				.015
1	5220-751-1950	(10) .190-24NC-1	.1570	1	.1887	.1480 + .0005		.0003	15	.013
2	5220-751-1951	(10) .190-24NC-1	.1570	2	.1882 +.0005	.1750 - .0005	.1570 +.0003	.00015	8	.0104
4	5220-751-1952		.1480	3		.14800 -.00004				.015
5	5220-751-1953		.1485	4		.14850 +.00004				.015
1	5220-751-1954	(10) .190-24NC-2	.1596	1	.1905	.1506 + .0005		.0003	15	.013
2	5220-751-1955	(10) .190-24NC-2	.1596	2	.1900 +.0005	.1776 - .0005	.1596 +.0003	.00015	8	.0104
4	5220-751-1956		.1506	3		.15060 -.00004				.015
5	5220-751-1957		.1511	4		.15110 +.00004				.015
1	5220-751-1958	(10) .190-24NC-3	.1605	1	.1905	.1515 + .0005		.0003	15	.013
2	5220-751-1959	(10) .190-24NC-3	.1605	2	.1900 +.0005	.1785 - .0005	.1605 +.0003	.00015	8	.0104
4	5220-751-1960		.1515	3		.15150 -.00004				.015
5	5220-751-1961		.1520	4		.15200 +.00004				.015

* 1 LO (Not Go) Thread Ring Gage
2. Truncated Thread Setting Plug Gage
3. Go Plain Plug Acceptance Check Gage for Minor Diameter
4. Not Go Plain Plug Acceptance Check Gage for Minor Diameter

Downloaded from http://www.everyspec.com

ORDBA Form 20-1577, (OT) 4 May 61

Table II. Tabulation of Design and Identification Data - American National Standard Thread (Continued)

FIGURE NO.	MARKING ON GAGE HANDLE				GAGE DIMENSIONS					
	MIL-STD PART NUMBER	THREAD DESIGNATION	LO PD	1	MAJOR DIA	MINOR DIA	———	TOL ON LEAD	HALF ANGLE TOL	ROOT CLEAR
			LO PD	2	MAJOR DIA FULL PORTION	MAJOR DIA TRUNCATED PORTION	PITCH DIA			
			MINOR DIA	3	———	PLAIN PLUG DIA	———	—	—	CHAM
			MINOR DIA	4	———	PLAIN PLUG DIA	———		—	CHAM
A	B	C	D	*	E	F	G	H	J	K
1	5220-751-1962	(10) .190-32NF-1	.1648	1	.1889	.1580 + .0005		.0003	15	.010
2	5220-751-1963	(10) .190-32NF-1	.1648	2	.1882 +.0005	.1783 - .0005	.1648 +.0003	.0001	12	.0078
4	5220-751-1964		.1580	3		.15800 -.00004				.015
5	5220-751-1965		.1585	4		.15850 +.00004				.015
1	5220-751-1966	(10) .190-32NF-2	.1670	1	.1905	.1602 + .0005		.0003	15	.010
2	5220-751-1967	(10) .190-32NF-2	.1670	2	.1900 +.0005	.1805 - .0005	.1670 +.0003	.0001	12	.0078
4	5220-751-1968		.1602	3		.16020 -.00004				.015
5	5220-751-1969		.1607	4		.16070 +.00004				.015
1	5220-751-1970	(10) .190-32NF-3	.1678	1	.1905	.1610 + .0005		.0003	15	.010
2	5220-751-1971	(10) .190-32NF-3	.1678	2	.1900 +.0005	.1813 - .0005	.1678 +.0003	.0001	12	.0078
4	5220-751-1972		.1610	3		.16100 -.00004				.015
5	5220-751-1973		.1615	4		.16150 +.00004				.015
1	5220-751-1974	(12) .216-24NC-1	.1830	1	.2147	.1740 + .0005		.0003	15	.013
2	5220-751-1975	(12) .216-24NC-1	.1830	2	.2142 +.0005	.2010 - .0005	.1830 +.0003	.00015	8	.0104
4	5220-751-1976		.1740	3		.17400 -.00004				.015
5	5220-751-1977		.1745	4		.17450 +.00004				.015
1	5220-751-1978	(12) .216-24NC-2	.1856	1	.2165	.1766 + .0005		.0003	15	.013
2	5220-751-1979	(12) .216-24NC-2	.1856	2	.2160 +.0005	.2036 - .0005	.1856 +.0003	.00015	8	.0104
4	5220-751-1980		.1766	3		.17660 -.00004				.015
5	5220-751-1981		.1771	4		.17710 +.00004				.015
1	5220-751-1982	(12) .216-24NC-3	.1865	1	.2165	.1775 + .0005		.0003	15	.013
2	5220-751-1983	(12) .216-24NC-3	.1865	2	.2160 +.0005	.2045 - .0005	.1865 +.0003	.00015	8	.0104
4	5220-751-1984		.1775	3		.17750 -.00004				.015
5	5220-751-1985		.1780	4		.17800 +.00004				.015

* 1. LO (Not Go) Thread Ring Gage
2. Truncated Thread Setting Plug Gage
3. Go Plain Plug Acceptance Check Gage for Minor Diameter
4. Not Go Plain Plug Acceptance Check Gage for Minor Diameter

Downloaded from http://www.everyspec.com

ORDBA Form 20-1577, (OT) 4 May 61

Table II. Tabulation of Design and Identification Data - American National Standard Thread (Continued)

FIGURE NO.	MARKING ON GAGE HANDLE				GAGE DIMENSIONS					
	MIL-STD PART NUMBER	THREAD DESIGNATION	LO PD	1	MAJOR DIA	MINOR DIA	———	TOL ON LEAD	HALF ANGLE TOL	ROOT CLEAR
			LO PD	2	MAJOR DIA FULL PORTION	MAJOR DIA TRUNCATED PORTION	PITCH DIA			
			MINOR DIA	3	———	PLAIN PLUG DIA	———	—	—	CHAM
			MINOR DIA	4	———	PLAIN PLUG DIA	———		—	CHAM
A	B	C	D	*	E	F	G	H	J	K
1	5220-751-1986	(12) .216-28NF-1	.1873	1	.2148	.1796 + .0005		.0003	15	.011
2	5220-751-1987	(12) .216-28NF-1	.1873	2	.2141 +.0005	.2028 - .0005	.1873 +.0003	.00015	8	.0089
4	5220-751-1988		.1796	3		.17960 -.00004				.015
5	5220-751-1989		.1801	4		.18010 +.00004				.015
1	5220-751-1990	(12) .216-28NF-2	.1897	1	.2165	.1820 + .0005		.0003	15	.011
2	5220-751-1991	(12) .216-28NF-2	.1897	2	.2160 +.0005	.2052 - .0005	.1897 +.0003	.00015	8	.0089
4	5220-751-1992		.1820	3		.18200 -.00004				.015
5	5220-751-1993		.1825	4		.18250 +.00004				.015
1	5220-751-1994	(12) .216-28NF-3	.1906	1	.2165	.1829 + .0005		.0003	15	.011
2	5220-751-1995	(12) .216-28NF-3	.1906	2	.2160 +.0005	.2061 - .0005	.1906 +.0003	.00015	8	.0089
4	5220-751-1996		.1829	3		.18290 -.00004				.015
5	5220-751-1997		.1834	4		.18340 +.00004				.015
1	5220-751-7050	(12) .216-32NEF-2	.1926	1	.2165	.1858 + .0005		.0003	15	.010
2	5220-751-7051	(12) .216-32NEF-2	.1926	2	.2160 +.0005	.2061 - .0005	.1926 +.0003	.0001	12	.0078
4	5220-751-7052		.1858	3		.18580 -.00004				.015
5	5220-751-7053		.1863	4		.18630 +.00004				.015
1	5220-751-7054	(12) .216-32NEF-3	.1935	1	.2165	.1867 + .0005		.0003	15	.010
2	5220-751-7055	(12) .216-32NEF-3	.1935	2	.2160 +.0005	.2070 - .0005	.1935 +.0003	.0001	12	.0078
4	5220-751-7056		.1867	3		.18670 -.00004				.015
5	5220-751-7057		.1872	4		.18720 +.00004				.015
1	5220-751-1998	.2500-20NC-1	.2109	1	.2489	.2001 + .0005		.0003	15	.016
2	5220-751-1999	.2500-20NC-1	.2109	2	.2484 +.0005	.2326 - .0005	.2109 +.0003	.00015	8	.0125
4	5220-751-2000		.2001	3		.20010 -.00004				.015
5	5220-751-2001		.2006	4		.20060 +.00004				.015

* 1. LO (Not Go) Thread Ring Gage
2. Truncated Thread Setting Plug Gage
3. Go Plain Plug Acceptance Check Gage for Minor Diameter
4. Not Go Plain Plug Acceptance Check Gage for Minor Diameter

Downloaded from http://www.everyspec.com

ORDBA Form 20-1577, (OT) 4 May 61

Table II. Tabulation of Design and Identification Data - American National Standard Thread (Continued)

FIGURE NO.	MARKING ON GAGE HANDLE: MIL-STD PART NUMBER	THREAD DESIGNATION	LO PD / LO PD / MINOR DIA / MINOR DIA	*	GAGE DIMENSIONS: MAJOR DIA / MAJOR DIA FULL PORTION / — / —	MINOR DIA / MAJOR DIA TRUNCATED PORTION / PLAIN PLUG DIA / PLAIN PLUG DIA	— / PITCH DIA / — / —	TOL ON LEAD	HALF ANGLE TOL	ROOT CLEAR / CHAM / CHAM
A	B	C	D	*	E	F	G	H	J	K
1	5220-751-2002	.2500-20NC-2	.2139	1	.2505	.2031 + .0005		.0003	15	.016
2	5220-751-2003	.2500-20NC-2	.2139	2	.2500 +.0005	.2356 - .0005	.2139 +.0003	.00015	8	.0125
4	5220-751-2004		.2031	3		.20310 -.00004				.015
5	5220-751-2005		.2036	4		.20360 +.00004				.015
1	5220-751-2006	.2500-20NC-3	.2149	1	.2505	.2041 + .0005		.0003	15	.016
2	5220-751-2007	.2500-20NC-3	.2149	2	.2500 +.0005	.2366 - .0005	.2149 +.0003	.00015	8	.0125
4	5220-751-2008		.2041	3		.20410 -.00004				.015
5	5220-751-2009		.2046	4		.20460 +.00004				.015
1	5220-751-2010	.2500-28NF-1	.2213	1	.2488	.2136 + .0005		.0003	15	.011
2	5220-751-2011	.2500-28NF-1	.2213	2	.2481 +.0005	.2368 - .0005	.2213 +.0003	.00015	8	.0089
4	5220-751-2012		.2136	3		.21360 -.00004				.015
5	5220-751-2013		.2141	4		.21410 +.00004				.015
1	5220-751-2014	.2500-28NF-2	.2237	1	.2505	.2160 + .0005		.0003	15	.011
2	5220-751-2015	.2500-28NF-2	.2237	2	.2500 +.0005	.2392 - .0005	.2237 +.0003	.00015	8	.0089
4	5220-751-2016		.2160	3		.21600 -.00004				.015
5	5220-751-2017		.2165	4		.21650 +.00004				.015
1	5220-751-2018	.2500-28NF-3	.2246	1	.2505	.2169 + .0005		.0003	15	.011
2	5220-751-2019	.2500-28NF-3	.2246	2	.2500 +.0005	.2401 - .0005	.2246 +.0003	.00015	8	.0089
4	5220-751-2020		.2169	3		.21690 -.00004				.015
5	5220-751-2021		.2174	4		.21740 +.00004				.015
1	5220-751-2022	.2500-32NEF-2	.2265	1	.2504	.2197 + .0005		.0003	15	.010
2	5220-751-2023	.2500-32NEF-2	.2265	2	.2499 +.0005	.2400 - .0005	.2265 +.0003	.0001	12	.0078
4	5220-751-2024		.2197	3		.21970 -.00004				.015
5	5220-751-2025		.2202	4		.22020 +.00004				.015

* 1. LO (Not Go) Thread Ring Gage
2. Truncated Thread Setting Plug Gage
3. Go Plain Plug Acceptance Check Gage for Minor Diameter
4. Not Go Plain Plug Acceptance Check Gage for Minor Diameter

Downloaded from http://www.everyspec.com

ORDBA Form 20-1577, (OT) 4 May 61

Table II. Tabulation of Design and Identification Data - American National Standard Thread (Continued)

FIGURE NO.	MARKING ON GAGE HANDLE: MIL-STD PART NUMBER	MARKING ON GAGE HANDLE: THREAD DESIGNATION	MARKING ON GAGE HANDLE: LO PD / LO PD / MINOR DIA / MINOR DIA	GAGE DIMENSIONS:	GAGE DIMENSIONS: MAJOR DIA / MAJOR DIA FULL PORTION / — / —	GAGE DIMENSIONS: MINOR DIA / MAJOR DIA TRUNCATED PORTION / PLAIN PLUG DIA / PLAIN PLUG DIA	GAGE DIMENSIONS: — / PITCH DIA / — / —	GAGE DIMENSIONS: TOL ON LEAD	GAGE DIMENSIONS: HALF ANGLE TOL	GAGE DIMENSIONS: ROOT CLEAR / CHAM / CHAM
A	B	C	D	*	E	F	G	H	J	K
1	5220-751-2026	.2500-32NEF-3	.2275	1	.2505	.2207 + .0005		.0003	15	.010
2	5220-751-2027	.2500-32NEF-3	.2275	2	.2500 +.0005	.2410 - .0005	.2275 +.0003	.0001	12	.0078
4	5220-751-2028		.2207	3		.22070 -.00004				.015
5	5220-751-2029		.2212	4		.22120 +.00004				.015
1	5220-751-5544	.3125-18UNC-1A-1	.2691	1	.3113	.2571 + .0005		.0003	10	.017
2	5220-751-5545	.3125-18UNC-1A-1	.2691	2	.3108 +.0005	.2932 - .0005	.2691 +.0003	.00015	8	.0139
4	5220-751-2032		.2571	3		.25710 -.00004				.015
5	5220-751-2033		.2576	4		.25760 +.00004				.015
1	5220-751-2034	.3125-18NC-2	.2723	1	.3130	.2603 + .0005		.0003	10	.017
2	5220-751-2035	.3125-18NC-2	.2723	2	.3125 +.0005	.2964 - .0005	.2723 +.0003	.00015	8	.0139
4	5220-751-2036		.2603	3		.26030 -.00004				.015
5	5220-751-2037		.2608	4		.26080 +.00004				.015
1	5220-751-5552	.3125-18UNC-3A-3	.2734	1	.3130	.2614 + .0005		.0003	10	.017
2	5220-751-5553	.3125-18UNC-3A-3	.2734	2	.3125 +.0005	.2975 - .0005	.2734 +.0003	.00015	8	.0139
4	5220-751-2040		.2614	3		.26140 -.00004				.015
5	5220-751-2041		.2619	4		.26190 +.00004				.015
1	5220-751-2042	.3125-24NF-1	.2795	1	.3113	.2705 + .0005		.0003	15	.013
2	5220-751-2043	.3125-24NF-1	.2795	2	.3108 +.0005	.2975 - .0005	.2795 +.0003	.00015	8	.0104
4	5220-751-2044		.2705	3		.27050 -.00004				.015
5	5220-751-2045		.2710	4		.27100 +.00004				.015
1	5220-751-2046	.3125-24NF-2	.2821	1	.3130	.2731 + .0005		.0003	15	.013
2	5220-751-2047	.3125-24NF-2	.2821	2	.3125 +.0005	.3001 - .0005	.2821 +.0003	.00015	8	.0104
4	5220-751-2048		.2731	3		.27310 -.00004				.015
5	5220-751-2049		.2736	4		.27360 +.00004				.015

* 1. LO (Not Go) Thread Ring Gage
2. Truncated Thread Setting Plug Gage
3. Go Plain Plug Acceptance Check Gage for Minor Diameter
4. Not Go Plain Plug Acceptance Check Gage for Minor Diameter

Downloaded from http://www.everyspec.com

ORDBA Form 20-1577, (OT) 4 May 61

Table II. Tabulation of Design and Identification Data - American National Standard Thread (Continued)

FIGURE NO.	MARKING ON GAGE HANDLE: MIL-STD PART NUMBER	MARKING ON GAGE HANDLE: THREAD DESIGNATION	MARKING ON GAGE HANDLE: LO PD / LO PD / MINOR DIA / MINOR DIA	GAGE DIMENSIONS: *	MAJOR DIA / MAJOR DIA FULL PORTION	MINOR DIA / MAJOR DIA TRUNCATED PORTION / PLAIN PLUG DIA / PLAIN PLUG DIA	PITCH DIA	TOL ON LEAD	HALF ANGLE TOL	ROOT CLEAR / CHAM / CHAM
A	B	C	D	*	E	F	G	H	J	K
1	5220-751-2050	.3125-24NF-3	.2830	1	.3130	.2740 + .0005		.0003	15	.013
2	5220-751-2051	.3125-24NF-3	.2830	2	.3125 +.0005	.3010 - .0005	.2830 +.0003	.00015	8	.0104
4	5220-751-2052		.2740	3		.27400 -.00004				.015
5	5220-751-2053		.2745	4		.27450 +.00004				.015
1	5220-751-2054	.3125-32NEF-2	.2889	1	.3128	.2821 + .0005		.0003	15	.010
2	5220-751-2055	.3125-32NEF-2	.2889	2	.3123 +.0005	.3024 - .0005	.2889 +.0003	.0001	12	.0078
4	5220-751-2056		.2821	3		.28210 -.00004				.030
5	5220-751-2057		.2826	4		.28260 +.00004				.030
1	5220-751-2058	.3125-32NEF-3	.2899	1	.3130	.2831 + .0005		.0003	15	.010
2	5220-751-2059	.3125-32NEF-3	.2899	2	.3125 +.0005	.3034 - .0005	.2899 +.0003	.0001	12	.0078
4	5220-751-2060		.2831	3		.28310 -.00004				.030
5	5220-751-2061		.2836	4		.28360 +.00004				.030
1	5220-751-2062	.3750-16NC-1	.3263	1	.3738	.3128 + .0006		.0003	10	.020
2	5220-751-2063	.3750-16NC-1	.3263	2	.3732 +.0006	.3534 - .0006	.3263 +.0003	.00015	8	.0156
4	5220-751-2064		.3128	3		.31280 -.00004				.030
5	5220-751-2065		.3134	4		.31340 +.00004				.030
1	5220-751-2066	.3750-16NC-2	.3299	1	.3756	.3164 + .0006		.0003	10	.020
2	5220-751-2067	.3750-16NC-2	.3299	2	.3750 +.0006	.3570 - .0006	.3299 +.0003	.00015	8	.0156
4	5220-751-2068		.3164	3		.31640 -.00004				.030
5	5220-751-2069		.3170	4		.31700 +.00004				.030
1	5220-751-2070	.3750-16NC-3	.3312	1	.3756	.3177 + .0006		.0003	10	.020
2	5220-751-2071	.3750-16NC-3	.3312	2	.3750 +.0006	.3583 - .0006	.3312 +.0003	.00015	8	.0156
4	5220-751-2072		.3177	3		.31770 -.00004				.030
5	5220-751-2073		.3183	4		.31830 +.00004				.030

* 1. LO (Not Go) Thread Ring Gage
2. Truncated Thread Setting Plug Gage
3. Go Plain Plug Acceptance Check Gage for Minor Diameter
4. Not Go Plain Plug Acceptance Check Gage for Minor Diameter

Downloaded from http://www.everyspec.com

ORDBA Form 20-1577, (OT) 4 May 61

Table II. Tabulation of Design and Identification Data - American National Standard Thread (Continued)

FIGURE NO.	MARKING ON GAGE HANDLE: MIL-STD PART NUMBER	THREAD DESIGNATION	LO PD / LO PD / MINOR DIA / MINOR DIA	*	GAGE DIMENSIONS: MAJOR DIA / MAJOR DIA FULL PORTION / — / —	MINOR DIA / MAJOR DIA TRUNCATED PORTION / PLAIN PLUG DIA / PLAIN PLUG DIA	— / PITCH DIA / — / —	TOL ON LEAD	HALF ANGLE TOL	ROOT CLEAR / CHAM / CHAM
A	B	C	D	*	E	F	G	H	J	K
1	5220-751-2074	.3750-24NF-1	.3420	1	.3737	.3330 + .0005		.0003	15	.013
2	5220-751-2075	.3750-24NF-1	.3420	2	.3732 +.0005	.3600 - .0005	.3420 +.0003	.00015	8	.0104
4	5220-751-2076		.3330	3		.33300 -.00004				.030
5	5220-751-2077		.3335	4		.33350 +.00004				.030
1	5220-751-2078	.3750-24NF-2	.3446	1	.3755	.3356 + .0005		.0003	15	.013
2	5220-751-2079	.3750-24NF-2	.3446	2	.3750 +.0005	.3626 - .0005	.3446 +.0003	.00015	8	.0104
4	5220-751-2080		.3356	3		.33560 -.00004				.030
5	5220-751-2081		.3361	4		.33610 +.00004				.030
1	5220-751-2082	.3750-24NF-3	.3455	1	.3755	.3365 + .0005		.0003	15	.013
2	5220-751-2083	.3750-24NF-3	.3455	2	.3750 +.0005	.3635 - .0005	.3455 +.0003	.00015	8	.0104
4	5220-751-2084		.3365	3		.33650 -.00004				.030
5	5220-751-2085		.3370	4		.33700 +.00004				.030
1	5220-751-2086	.3750-32NEF-2	.3513	1	.3752	.3445 + .0005		.0003	15	.010
2	5220-751-2087	.3750-32NEF-2	.3513	2	.3747 +.0005	.3648 - .0005	.3513 +.0003	.0001	12	.0078
4	5220-751-2088		.3445	3		.34450 -.00004				.030
5	5220-751-2089		.3450	4		.34500 +.00004				.030
1	5220-751-2090	.3750-32NEF-3	.3523	1	.3755	.3455 + .0005		.0003	15	.010
2	5220-751-2091	.3750-32NEF-3	.3523	2	.3750 +.0005	.3658 - .0005	.3523 +.0003	.0001	12	.0078
4	5220-751-2092		.3455	3		.34550 -.00004				.030
5	5220-751-2093		.3460	4		.34600 +.00004				.030
1	5220-751-2094	.4375-14NC-1	.3820	1	.4360	.3665 + .0006		.0003	10	.022
2	5220-751-2095	.4375-14NC-1	.3820	2	.4354 +.0006	.4129 - .0006	.3820 +.0003	.0002	6	.0179
4	5220-751-2096		.3665	3		.36650 -.00004				.030
5	5220-751-2097		.3671	4		.36710 +.00004				.030

* 1. LO (Not Go) Thread Ring Gage
2. Truncated Thread Setting Plug Gage
3. Go Plain Plug Acceptance Check Gage for Minor Diameter
4. Not Go Plain Plug Acceptance Check Gage for Minor Diameter

Downloaded from http://www.everyspec.com

ORDBA Form 20-1577, (OT) 4 May 61

Table II. Tabulation of Design and Identification Data - American National Standard Thread (Continued)

FIGURE NO.	MARKING ON GAGE HANDLE: MIL-STD PART NUMBER	MARKING ON GAGE HANDLE: THREAD DESIGNATION	MARKING ON GAGE HANDLE: LO PD / LO PD / MINOR DIA / MINOR DIA	*	GAGE DIMENSIONS: MAJOR DIA / MAJOR DIA FULL PORTION / ——— / ———	GAGE DIMENSIONS: MINOR DIA / MAJOR DIA TRUNCATED PORTION / PLAIN PLUG DIA / PLAIN PLUG DIA	GAGE DIMENSIONS: ——— / ——— / ——— / ———	GAGE DIMENSIONS: TOL ON LEAD	GAGE DIMENSIONS: HALF ANGLE TOL	GAGE DIMENSIONS: ROOT CLEAR / CHAM / CHAM
A	B	C	D	*	E	F	G	H	J	K
1	5220-751-2098	.4375-14NC-2	.3862	1	.4381	.3707 + .0006		.0003	10	.022
2	5220-751-2099	.4375-14NC-2	.3862	2	.4375 +.0006	.4171 - .0006	.3862 +.0003	.0002	6	.0179
4	5220-751-2100		.3707	3		.37070 -.00004				.030
5	5220-751-2101		.3713	4		.37130 +.00004				.030
1	5220-751-2102	.4375-14NC-3	.3875	1	.4381	.3720 + .0006		.0003	10	.022
2	5220-751-2103	.4375-14NC-3	.3875	2	.4375 +.0006	.4184 - .0006	.3875 +.0003	.0002	6	.0179
4	5220-751-2104		.3720	3		.37200 -.00004				.030
5	5220-751-2105		.3726	4		.37260 +.00004				.030
1	5220-751-2106	.4375-20NF-1	.3984	1	.4364	.3876 + .0005		.0003	15	.016
2	5220-751-2107	.4375-20NF-1	.3984	2	.4359 +.0005	.4200 - .0005	.3984 +.0003	.00015	8	.0125
1	5220-751-2108	.4375-20NF-2	.4014	1	.4380	.3906 + .0005		.0003	15	.016
2	5220-751-2109	.4375-20NF-2	.4014	2	.4375 +.0005	.4231 - .0005	.4014 +.0003	.00015	8	.0125
1	5220-751-2110	.4375-20NF-3	.4024	1	.4380	.3916 + .0005		.0003	15	.016
2	5220-751-2111	.4375-20NF-3	.4024	2	.4375 +.0005	.4241 - .0005	.4024 +.0003	.00015	8	.0125
1	5220-751-2112	.4375-28NEF-2	.4107	1	.4380	.4030 + .0005		.0003	15	.011
2	5220-751-2113	.4375-28NEF-2	.4107	2	.4375 +.0005	.4262 - .0005	.4107 +.0003	.00015	8	.0089
1	5220-751-2114	.4375-28NEF-3	.4118	1	.4380	.4041 + .0005		.0003	15	.011
2	5220-751-2115	.4375-28NEF-3	.4118	2	.4375 +.0005	.4273 - .0005	.4118 +.0003	.00015	8	.0089
1	5220-751-2116	.5000-12N-2	.4403	1	.5006	.4223 + .0006		.0003	10	.026
2	5220-751-2117	.5000-12N-2	.4403	2	.5000 +.0006	.4764 - .0006	.4403 +.0003	.0002	6	.0208

* 1. LO (Not Go) Thread Ring Gage
2. Truncated Thread Setting Plug Gage
3. Go Plain Plug Acceptance Check Gage for Minor Diameter
4. Not Go Plain Plug Acceptance Check Gage for Minor Diameter

Downloaded from http://www.everyspec.com

Table II. Tabulation of Design and Identification Data - American National Standard Thread (Continued)

FIG. NO.	MARKING ON GAGE HANDLE				GAGE DIMENSIONS					
	MIL-STD PART NUMBER	THREAD DESIGNATION	LO PD / LO PD	1 / 2	MAJOR DIA / MAJOR DIA FULL PORTION	MINOR DIA / MAJOR DIA TRUNCATED PORTION	——— / PITCH DIA	TOL ON LEAD	HALF ANGLE TOL	ROOT CLEAR
A	B	C	D	*	E	F	G	H	J	K
1	5220-751-2118	.5000-12N-3	.4419	1	.5006	.4239 + .0006		.0003	10	.026
2	5220-751-2119	.5000-12N-3	.4419	2	.5000 +.0006	.4780 - .0006	.4419 +.0003	.0002	6	.0208
1	5220-751-2120	.5000-13NC-1	.4404	1	.4984	.4238 + .0006		.0003	10	.024
2	5220-751-2121	.5000-13NC-1	.4404	2	.4978 +.0006	.4737 - .0006	.4404 +.0003	.0002	6	.0192
1	5220-751-2122	.5000-13NC-2	.4448	1	.5006	.4282 + .0006		.0003	10	.024
2	5220-751-2123	.5000-13NC-2	.4448	2	.5000 +.0006	.4781 - .0006	.4448 +.0003	.0002	6	.0192
1	5220-751-5634	.5000-13UNC-3A-3	.4463	1	.5006	.4297 + .0006		.0003	10	.024
2	5220-751-5635	.5000-13UNC-3A-3	.4463	2	.5000 +.0006	.4796 - .0006	.4463 +.0003	.0002	6	.0192
1	5220-751-2126	.5000-20NF-1	.4609	1	.4989	.4501 + .0005		.0003	15	.016
2	5220-751-2127	.5000-20NF-1	.4609	2	.4984 +.0005	.4826 - .0005	.4609 +.0003	.00015	8	.0125
1	5220-751-2128	.5000-20NF-2	.4639	1	.5005	.4531 + .0005		.0003	15	.016
2	5220-751-2129	.5000-20NF-2	.4639	2	.5000 +.0005	.4856 - .0005	.4639 +.0003	.00015	8	.0125
1	5220-751-2130	.5000-20NF-3	.4649	1	.5005	.4541 + .0005		.0003	15	.016
2	5220-751-2131	.5000-20NF-3	.4649	2	.5000 +.0005	.4866 - .0005	.4649 +.0003	.00015	8	.0125
1	5220-751-2132	.5000-28NEF-2	.4731	1	.5004	.4654 + .0005		.0003	15	.011
2	5220-751-2133	.5000-28NEF-2	.4731	2	.4999 +.0005	.4886 - .0005	.4731 +.0003	.00015	8	.0089
1	5220-751-2134	.5000-28NEF-3	.4742	1	.5005	.4665 + .0005		.0003	15	.011
2	5220-751-2135	.5000-28NEF-3	.4742	2	.5000 +.0005	.4897 - .0005	.4742 +.0003	.00015	8	.0089
1	5220-751-2136	.5625-12NC-1	.4981	1	.5607	.4801 + .0006		.0003	10	.026
2	5220-751-2137	.5625-12NC-1	.4981	2	.5601 +.0006	.5342 - .0006	.4981 +.0003	.0002	6	.0208
1	5220-751-2138	.5625-12NC-2	.5028	1	.5631	.4848 + .0006		.0003	10	.026
2	5220-751-2139	.5625-12NC-2	.5028	2	.5625 +.0006	.5389 - .0006	.5028 +.0003	.0002	6	.0208

* 1. LO (Not Go) Thread Ring Gage 2. Truncated Thread Setting Plug Gage

ORDBA Form 20-1578, (OT) 4 May 61

Downloaded from http://www.everyspec.com

Table II. Tabulation of Design and Identification Data - American National Standard Thread (Continued)

FIG. NO.	MARKING ON GAGE HANDLE				GAGE DIMENSIONS					
	MIL-STD PART NUMBER	THREAD DESIGNATION	LO PD	I	MAJOR DIA	MINOR DIA		TOL ON LEAD	HALF ANGLE TOL	ROOT CLEAR
			LO PD	2	MAJOR DIA FULL PORTION	MAJOR DIA TRUNCATED PORTION	PITCH DIA			
A	B	C	D	*	E	F	G	H	J	K
1	5220-751-2140	.5625-12NC-3	.5044	1	.5631	.4864 + .0006		.0003	10	.026
2	5220-751-2141	.5625-12NC-3	.5044	2	.5625 + .0006	.5405 - .0006	.5044 +.0003	.0002	6	.0208
1	5220-751-2142	.5625-18NF-1	.5191	1	.5613	.5071 + .0005		.0003	10	.017
2	5220-751-2143	.5625-18NF-1	.5191	2	.5608 + .0005	.5432 - .0005	.5191 +.0003	.00015	8	.0139
1	5220-751-2144	.5625-18NF-2	.5223	1	.5630	.5103 + .0005		.0003	10	.017
2	5220-751-2145	.5625-18NF-2	.5223	2	.5625 + .0005	.5464 - .0005	.5223 +.0003	.00015	8	.0139
1	5220-751-2146	.5625-18NF-3	.5234	1	.5630	.5114 + .0005		.0003	10	.017
2	5220-751-2147	.5625-18NF-3	.5234	2	.5625 + .0005	.5475 - .0005	.5234 +.0003	.00015	8	.0139
1	5220-751-2148	.5625-24NEF-2	.5314	1	.5630	.5224 + .0005		.0003	15	.013
2	5220-751-2149	.5625-24NEF-2	.5314	2	.5625 + .0005	.5494 - .0005	.5314 +.0003	.00015	8	.0104
1	5220-751-2150	.5625-24NEF-3	.5326	1	.5630	.5236 + .0005		.0003	15	.013
1	5220-751-2151	.5625-24NEF-3	.5326	2	.5625 + .0005	.5506 - .0005	.5326 +.0003	.00015	8	.0104
1	5220-751-2152	.6250-11NC-1	.5549	1	.6230	.5352 + .0006		.0003	10	.028
2	5220-751-2153	.6250-11NC-1	.5549	2	.6224 + .0006	.5943 - .0006	.5549 +.0003	.0002	6	.0217
1	5220-751-2154	.6250-11NC-2	.5601	1	.6256	.5404 + .0006		.0003	10	.028
2	5220-751-2155	.6250-11NC-2	.5601	2	.6250 + .0006	.5995 - .0006	.5601 +.0003	.0002	6	.0217
1	5220-751-2156	.6250-11NC-3	.5618	1	.6256	.5421 + .0006		.0003	10	.028
2	5220-751-2157	.6250-11NC-3	.5618	2	.6250 + .0006	.6012 - .0006	.5618 +.0003	.0002	6	.0217
1	5220-751-2158	.6250-12N-2	.5653	1	.6256	.5473 + .0006		.0003	10	.026
2	5220-751-2159	.6250-12N-2	.5653	2	.6250 + .0006	.6014 - .0006	.5653 +.0003	.0002	6	.0208
1	5220-751-2160	.6250-12N-3	.5669	1	.6256	.5489 + .0006		.0003	10	.026
2	5220-751-2161	.6250-12N-3	.5669	2	.6250 + .0006	.6030 - .0006	.5669 +.0003	.0002	6	.0208

* 1. LO (Not Go) Thread Ring Gage 2. Truncated Thread Setting Plug Gage

ORDBA Form 20-1578, (OT) 4 May 61

Downloaded from http://www.everyspec.com

Table II. Tabulation of Design and Identification Data - American National Standard Thread (Continued)

FIG. NO.	MARKING ON GAGE HANDLE				GAGE DIMENSIONS					
	MIL-STD PART NUMBER	THREAD DESIGNATION	LO PD / LO PD	1 / 2	MAJOR DIA / MAJOR DIA FULL PORTION	MINOR DIA / MAJOR DIA TRUNCATED PORTION	PITCH DIA	TOL ON LEAD	HALF ANGLE TOL	ROOT CLEAR
A	B	C	D	*	E	F	G	H	J	K
1	5220-751-2162	.6250-18NF-1	.5816	1	.6238	.5696 + .0005		.0003	10	.017
2	5220-751-2163	.6250-18NF-1	.5816	2	.6233 + .0005	.6057 - .0005	.5816 +.0003	.00015	8	.0139
1	5220-751-2164	.6250-18NF-2	.5848	1	.6255	.5728 + .0005		.0003	10	.017
2	5220-751-2165	.6250-18NF-2	.5848	2	.6250 + .0005	.6089 - .0005	.5848 +.0003	.00015	8	.0139
1	5220-751-2166	.6250-18NF-3	.5859	1	.6255	.5739 + .0005		.0003	10	.017
2	5220-751-2167	.6250-18NF-3	.5859	2	.6250 + .0005	.6100 - .0005	.5859 +.0003	.00015	8	.0139
1	5220-751-2168	.6250-24NEF-2	.5938	1	.6255	.5848 + .0005		.0003	15	.013
2	5220-751-2169	.6250-24NEF-2	.5938	2	.6250 + .0005	.6118 - .0005	.5938 +.0003	.00015	8	.0104
1	5220-751-2170	.6250-24NEF-3	.5950	1	.6255	.5860 + .0005		.0003	15	.013
2	5220-751-2171	.6250-24NEF-3	.5950	2	.6250 + .0005	.6130 - .0005	.5950 +.0003	.00015	8	.0104
1	5220-751-2172	.6875-12N-2	.6278	1	.6881	.6098 + .0006		.0003	10	.026
2	5220-751-2173	.6875-12N-2	.6278	2	.6875 + .0006	.6639 - .0006	.6278 +.0003	.0002	6	.0208
1	5220-751-2174	.6875-12N-3	.6294	1	.6881	.6114 + .0006		.0003	10	.026
2	5220-751-2175	.6875-12N-3	.6294	2	.6875 + .0006	.6655 - .0006	.6294 +.0003	.0002	6	.0208
1	5220-751-2176	.6875-24NEF-2	.6563	1	.6880	.6473 + .0005		.0003	15	.013
2	5220-751-2177	.6875-24NEF-2	.6563	2	.6875 + .0005	.6743 - .0005	.6563 +.0003	.00015	8	.0104
1	5220-751-2178	.6875-24NEF-3	.6575	1	.6880	.6485 + .0005		.0003	15	.013
2	5220-751-2179	.6875-24NEF-3	.6575	2	.6875 + .0005	.6755 - .0005	.6575 +.0003	.00015	8	.0104
1	5220-751-2180	.7500-10NC-1	.6730	1	.7478	.6514 + .0006		.0003	10	.031
2	5220-751-2181	.7500-10NC-1	.6730	2	.7472 + .0006	.7163 - .0006	.6730 +.0003	.00025	6	.0250
1	5220-751-2182	.7500-10NC-2	.6786	1	.7506	.6570 + .0006		.0003	10	.031
2	5220-751-2183	.7500-10NC-2	.6786	2	.7500 + .0006	.7219 - .0006	.6786 +.0003	.00025	6	.0250

* 1. 10 (Not Go) Thread Ring Gage 2. Truncated Thread Setting Plug Gage

Downloaded from http://www.everyspec.com

Table II. Tabulation of Design and Identification Data - American National Standard Thread (Continued)

FIG. NO.	MARKING ON GAGE HANDLE				GAGE DIMENSIONS					
	MIL-STD PART NUMBER	THREAD DESIGNATION	LO PD / LO PD	1 / 2	MAJOR DIA / MAJOR DIA FULL PORTION	MINOR DIA / MAJOR DIA TRUNCATED PORTION	PITCH DIA	TOL ON LEAD	HALF ANGLE TOL	ROOT CLEAR
A	B	C	D	*	E	F	G	H	J	K
1	5220-751-2184	.7500-10NC-3	.6805	1	.7506	.6589 + .0006		.0003	10	.031
2	5220-751-2185	.7500-10NC-3	.6805	2	.7500 + .0006	.7238 - .0006	.6805 +.0003	.00025	6	.0250
1	5220-751-2186	.7500-12N-2	.6903	1	.7506	.6723 + .0006		.0003	10	.026
2	5220-751-2187	.7500-12N-2	.6903	2	.7500 + .0006	.7264 - .0006	.6903 +.0003	.0002	6	.0208
1	5220-751-2188	.7500-12N-3	.6919	1	.7506	.6739 + .0006		.0003	10	.026
2	5220-751-2189	.7500-12N-3	.6919	2	.7500 + .0006	.7280 - .0006	.6919 +.0003	.0002	6	.0208
1	5220-751-2190	.7500-16NF-1	.7013	1	.7488	.6878 + .0006		.0003	10	.020
2	5220-751-2191	.7500-16NF-1	.7013	2	.7482 + .0006	.7284 - .0006	.7013 +.0003	.00015	8	.0156
1	5220-751-2192	.7500-16NF-2	.7049	1	.7506	.6914 + .0006		.0003	10	.020
2	5220-751-2193	.7500-16NF-2	.7049	2	.7500 + .0006	.7320 - .0006	.7049 +.0003	.00015	8	.0156
1	5220-751-2194	.7500-16NF-3	.7062	1	.7506	.6927 + .0006		.0003	10	.020
2	5220-751-2195	.7500-16NF-3	.7062	2	.7500 + .0006	.7333 - .0006	.7062 +.0003	.00015	8	.0156
1	5220-751-2196	.7500-20NEF-2	.7129	1	.7505	.7021 + .0005		.0003	15	.016
2	5220-751-2197	.7500-20NEF-2	.7129	2	.7500 + .0005	.7346 - .0005	.7129 +.0003	.00015	8	.0125
1	5220-751-2198	.7500-20NEF-3	.7143	1	.7505	.7035 + .0005		.0003	15	.016
2	5220-751-2199	.7500-20NEF-3	.7143	2	.7500 + .0005	.7360 - .0005	.7143 +.0003	.00015	8	.0125
1	5220-751-2200	.8125-12N-2	.7528	1	.8131	.7348 + .0006		.0003	10	.026
2	5220-751-2201	.8125-12N-2	.7528	2	.8125 + .0006	.7889 - .0006	.7528 +.0003	.0002	6	.0208
1	5220-751-2202	.8125-12N-3	.7544	1	.8131	.7364 + .0006		.0003	10	.026
2	5220-751-2203	.8125-12N-3	.7544	2	.8125 + .0006	.7905 - .0006	.7544 +.0003	.0002	6	.0208
1	5220-751-2204	.8125-16N-2	.7668	1	.8131	.7533 + .0006		.0003	10	.020
2	5220-751-2205	.8125-16N-2	.7668	2	.8125 + .0006	.7939 - .0006	.7668 +.0003	.00015	8	.0156

* 1. LO (Not Go) Thread Ring Gage 2. Truncated Thread Setting Plug Gage

ORDBA Form 20-1578, (OT) 4 May 61

Downloaded from http://www.everyspec.com

Table II. Tabulation of Design and Identification Data - American National Standard Thread (Continued)

FIG. NO.	MARKING ON GAGE HANDLE				GAGE DIMENSIONS					
	MIL-STD PART NUMBER	THREAD DESIGNATION	LO PD / LO PD	1 / 2	MAJOR DIA / MAJOR DIA FULL PORTION	MINOR DIA / MAJOR DIA TRUNCATED PORTION	PITCH DIA	TOL ON LEAD	HALF ANGLE TOL	ROOT CLEAR
A	B	C	D	*	E	F	G	H	J	K
1	5220-751-2206	.8125-16N-3	.7684	1	.8131	.7549 + .0006		.0003	10	.020
2	5220-751-2207	.8125-16N-3	.7684	2	.8125 + .0006	.7955 - .0006	.7684 +.0003	.00015	8	.0156
1	5220-751-2208	.8125-20NEF-2	.7754	1	.8130	.7646 + .0005		.0003	15	.016
2	5220-751-2209	.8125-20NEF-2	.7754	2	.8125 + .0005	.7971 - .0005	.7754 +.0003	.00015	8	.0125
1	5220-751-2210	.8125-20NEF-3	.7768	1	.8130	.7660 + .0005		.0003	15	.016
2	5220-751-2211	.8125-20NEF-3	.7768	2	.8125 + .0005	.7985 - .0005	.7768 +.0003	.00015	8	.0125
1	5220-751-2212	.8750-9NC-1	.7897	1	.8726	.7656 + .0007		.0003	10	.035
2	5220-751-2213	.8750-9NC-1	.7897	2	.8719 + .0007	.8378 - .0007	.7897 +.0003	.00025	6	.0278
1	5220-751-2214	.8750-9NC-2	.7958	1	.8757	.7717 + .0007		.0003	10	.035
2	5220-751-2215	.8750-9NC-2	.7958	2	.8750 + .0007	.8439 - .0007	.7958 +.0003	.00025	6	.0278
1	5220-751-2216	.8750-9NC-3	.7979	1	.8757	.7738 + .0007		.0003	10	.035
2	5220-751-2217	.8750-9NC-3	.7979	2	.8750 + .0007	.8460 - .0007	.7979 +.0003	.00025	6	.0278
1	5220-751-2218	.8750-12N-2	.8153	1	.8756	.7973 + .0006		.0003	10	.026
2	5220-751-2219	.8750-12N-2	.8153	2	.8750 + .0006	.8514 - .0006	.8153 +.0003	.0002	6	.0208
1	5220-751-2220	.8750-12N-3	.8169	1	.8756	.7989 + .0006		.0003	10	.026
2	5220-751-2221	.8750-12N-3	.8169	2	.8750 + .0006	.8530 - .0006	.8169 +.0003	.0002	6	.0208
1	5220-751-2222	.8750-14NF-1	.8195	1	.8735	.8040 + .0006		.0003	10	.022
2	5220-751-2223	.8750-14NF-1	.8195	2	.8729 + .0006	.8504 - .0006	.8195 +.0003	.0002	6	.0179
1	5220-751-2224	.8750-14NF-2	.8237	1	.8756	.8082 + .0006		.0003	10	.022
2	5220-751-2225	.8750-14NF-2	.8237	2	.8750 + .0006	.8546 - .0006	.8237 +.0003	.0002	6	.0179
1	5220-751-2226	.8750-14NF-3	.8250	1	.8756	.8095 + .0006		.0003	10	.022
2	5220-751-2227	.8750-14NF-3	.8250	2	.8750 + .0006	.8559 - .0006	.8250 +.0003	.0002	6	.0179

* 1. LO (Not Go) Thread Ring Gage 2. Truncated Thread Setting Plug Gage

ORDBA Form 20-1578, (OT) 4 May 61

Downloaded from http://www.everyspec.com

Table II. Tabulation of Design and Identification Data - American National Standard Thread (Continued)

FIG. NO.	MARKING ON GAGE HANDLE				GAGE DIMENSIONS					
	MIL-STD PART NUMBER	THREAD DESIGNATION	LO PD / LO PD	1 / 2	MAJOR DIA / MAJOR DIA FULL PORTION	MINOR DIA / MAJOR DIA TRUNCATED PORTION	PITCH DIA	TOL ON LEAD	HALF ANGLE TOL	ROOT CLEAR
A	B	C	D	*	E	F	G	H	J	K
1	5220-751-2228	.8750-16N-2	.8293	1	.8756	.8158 + .0006		.0003	10	.020
2	5220-751-2229	.8750-16N-2	.8293	2	.8750 + .0006	.8564 - .0006	.8293 +.0003	.00015	8	.0156
1	5220-751-2230	.8750-16UN-3A-3	.8308	1	.8756	.8173 + .0006		.0003	10	.020
2	5220-751-2231	.8750-16UN-3A-3	.8308	2	.8750 + .0006	.8579 - .0006	.8308 +.0003	.00015	8	.0156
1	5220-751-2232	.8750-20NEF-2	.8378	1	.8755	.8270 + .0005		.0003	15	.016
2	5220-751-2233	.8750-20NEF-2	.8378	2	.8750 + .0005	.8595 - .0005	.8378 +.0003	.00015	8	.0125
1	5220-751-5716	.8750-20UNEF-3A-3	.8392	1	.8755	.8284 + .0005		.0003	15	.016
2	5220-751-5717	.8750-20UNEF-3A-3	.8392	2	.8750 + .0005	.8609 - .0005	.8392 +.0003	.00015	8	.0125
1	5220-751-2236	.9375-12N-2	.8778	1	.9381	.8598 + .0006		.0003	10	.026
2	5220-751-2237	.9375-12N-2	.8778	2	.9375 + .0006	.9139 - .0006	.8778 +.0003	.0002	6	.0208
1	5220-751-2238	.9375-12N-3	.8794	1	.9381	.8614 + .0006		.0003	10	.026
2	5220-751-2239	.9375-12N-3	.8794	2	.9375 + .0006	.9155 - .0006	.8794 +.0003	.0002	6	.0208
1	5220-751-2240	.9375-16N-2	.8917	1	.9371	.8782 + .0006		.0003	10	.020
2	5220-751-2241	.9375-16N-2	.8917	2	.9375 + .0006	.9188 - .0006	.8917 +.0003	.00015	8	.0156
1	5220-751-2242	.9375-16N-3	.8933	1	.9381	.8798 + .0006		.0003	10	.020
2	5220-751-2243	.9375-16N-3	.8933	2	.9375 + .0006	.9204 - .0006	.8933 +.0003	.00015	8	.0156
1	5220-751-2244	.9375-20NEF-2	.9003	1	.9380	.8895 + .0005		.0003	15	.016
2	5220-751-2245	.9375-20NEF-2	.9003	2	.9375 + .0005	.9220 - .0005	.9003 +.0003	.00015	8	.0125
1	5220-751-2246	.9375-20NEF-3	.9017	1	.9380	.8909 + .0005		.0003	15	.016
2	5220-751-2247	.9375-20NEF-3	.9017	2	.9375 + .0005	.9234 - .0005	.9017 +.0003	.00015	8	.0125
1	5220-751-2248	1.0000-8NC-1	.9043	1	.9973	.8772 + .0007		.0004	5	.039
2	5220-751-2249	1.0000-8NC-1	.9043	2	.9966 + .0007	.9584 - .0007	.9043 +.0004	.00025	5	.0312

* 1. LO (Not Go) Thread Ring Gage 2. Truncated Thread Setting Plug Gage

ORDBA Form 20-1578, (OT) 4 May 61

Downloaded from http://www.everyspec.com

Table II. Tabulation of Design and Identification Data - American National Standard Thread (Continued)

FIG. NO.	MARKING ON GAGE HANDLE				GAGE DIMENSIONS					
	MIL-STD PART NUMBER	THREAD DESIGNATION	LO PD	1	MAJOR DIA	MINOR DIA	———	TOL ON LEAD	HALF ANGLE TOL	ROOT CLEAR
			LO PD	2	MAJOR DIA FULL PORTION	MAJOR DIA TRUNCATED PORTION	PITCH DIA			
A	B	C	D	*	E	F	G	H	J	K
1	5220-751-2250	1.0000-8NC-2	.9112	1	1.0007	.8841 + .0007		.0004	5	.039
2	5220-751-2251	1.0000-8NC-2	.9112	2	1.0000 + .0007	.9653 - .0007	.9112 +.0004	.00025	5	.0312
1	5220-751-2252	1.0000-8NC-3	.9134	1	1.0007	.8863 + .0007		.0004	5	.039
2	5220-751-2253	1.0000-8NC-3	.9134	2	1.0000 + .0007	.9675 - .0007	.9134 +.0004	.00025	5	.0312
1	5220-751-2254	1.0000-12N-2	.9403	1	1.0006	.9223 + .0006		.0003	10	.026
2	5220-751-2255	1.0000-12N-2	.9403	2	1.0000 + .0006	.9764 - .0006	.9403 +.0003	.0002	6	.0208
1	5220-751-2256	1.0000-12N-3	.9419	1	1.0006	.9239 + .0006		.0003	10	.026
2	5220-751-2257	1.0000-12N-3	.9419	2	1.0000 + .0006	.9780 - .0006	.9419 +.0003	.0002	6	.0208
1	5220-751-2264	1.0000-16N-2	.9542	1	1.0006	.9407 + .0006		.0003	10	.020
2	5220-751-2265	1.0000-16N-2	.9542	2	1.0000 + .0006	.9813 - .0006	.9542 +.0003	.00015	8	.0156
1	5220-751-2266	1.0000-16UN-3A-3	.9557	1	1.0006	.9422 + .0006		.0003	10	.020
2	5220-751-2267	1.0000-16UN-3A-3	.9557	2	1.0000 + .0006	.9828 - .0006	.9557 +.0003	.00015	8	.0156
1	5220-751-2268	1.0000-20NEF-2	.9627	1	1.0005	.9519 + .0005		.0003	15	.016
2	5220-751-2269	1.0000-20NEF-2	.9627	2	1.0000 + .0005	.9844 - .0005	.9627 +.0003	.00015	8	.0125
1	5220-751-5742	1.0000-20UNEF-3A-3	.9641	1	1.0005	.9533 + .0005		.0003	15	.016
2	5220-751-5743	1.0000-20UNEF-3A-3	.9641	2	1.0000 + .0005	.9858 - .0005	.9641 +.0003	.00015	8	.0125
1	5220-751-2272	1.0625-12N-2	1.0028	1	1.0631	.9848 + .0006		.0003	10	.026
2	5220-751-2273	1.0625-12N-2	1.0028	2	1.0625 + .0006	1.0389 - .0006	1.0028 +.0003	.0002	6	.0208
1	5220-751-2274	1.0625-12N-3	1.0044	1	1.0631	.9864 + .0006		.0003	10	.026
2	5220-751-2275	1.0625-12N-3	1.0044	2	1.0625 + .0006	1.0405 - .0006	1.0044 +.0003	.0002	6	.0208
1	5220-751-2276	1.0625-16N-2	1.0166	1	1.0631	1.0031 + .0006		.0003	10	.020
2	5220-751-2277	1.0625-16N-2	1.0166	2	1.0625 + .0006	1.0437 - .0006	1.0166 +.0003	.00015	8	.0156

* 1. LO (Not Go) Thread Ring Gage 2. Truncated Thread Setting Plug Gage

ORDBA Form 20-1578. (OT) 4 May 61

Downloaded from http://www.everyspec.com

Table II. Tabulation of Design and Identification Data - American National Standard Thread (Continued)

FIG. NO.	MARKING ON GAGE HANDLE				GAGE DIMENSIONS					
	MIL-STD PART NUMBER	THREAD DESIGNATION	LO PD	1	MAJOR DIA	MINOR DIA		TOL ON LEAD	HALF ANGLE TOL	ROOT CLEAR
			LO PD	2	MAJOR DIA FULL PORTION	MAJOR DIA TRUNCATED PORTION	PITCH DIA			
A	B	C	D	*	E	F	G	H	J	K
1	5220-751-2278	1.0625-16UN-3A-3	1.0182	1	1.0631	1.0047 + .0006		.0003	10	.020
2	5220-751-2279	1.0625-16UN-3A-3	1.0182	2	1.0625 +.0006	1.0453 - .0006	1.0182 +.0003	.00015	8	.0156
1	5220-751-2280	1.0625-18NEF-2	1.0213	1	1.0630	1.0093 + .0005		.0003	10	.017
2	5220-751-2281	1.0625-18NEF-2	1.0213	2	1.0625 +.0005	1.0454 - .0005	1.0213 +.0003	.00015	8	.0139
1	5220-751-5750	1.0625-18UNEF-3A-3	1.0228	1	1.0630	1.0108 + .0005		.0003	10	.017
2	5220-751-5751	1.0625-18UNEF-3A-3	1.0228	2	1.0625 +.0005	1.0469 - .0005	1.0228 +.0003	.00015	8	.0139
1	5220-751-2284	1.1250-7NC-1	1.0159	1	1.1218	.9850 + .0007		.0004	5	.045
2	5220-751-2285	1.1250-7NC-1	1.0159	2	1.1211 +.0007	1.0778 - .0007	1.0159 +.0004	.0003	5	.0357
1	5220-751-2286	1.1250-7NC-2	1.0237	1	1.1257	.9928 + .0007		.0004	5	.045
2	5220-751-2287	1.1250-7NC-2	1.0237	2	1.1250 +.0007	1.0856 - .0007	1.0237 +.0004	.0003	5	.0357
1	5220-751-2288	1.1250-7NC-3	1.0263	1	1.1257	.9954 + .0007		.0004	5	.045
2	5220-751-2289	1.1250-7NC-3	1.0263	2	1.1250 +.0007	1.0882 - .0007	1.0263 +.0004	.0003	5	.0357
1	5220-751-2290	1.1250-8N-2	1.0359	1	1.1257	1.0088 + .0007		.0004	5	.039
2	5220-751-2291	1.1250-8N-2	1.0359	2	1.1250 +.0007	1.0900 - .0007	1.0359 +.0004	.00025	5	.0312
1	5220-751-2292	1.1250-8N-3	1.0383	1	1.1257	1.0112 + .0007		.0004	5	.039
2	5220-751-2293	1.1250-8N-3	1.0383	2	1.1250 +.0007	1.0924 - .0007	1.0383 +.0004	.00025	5	.0312
1	5220-751-2294	1.1250-12NF-1	1.0606	1	1.1232	1.0426 + .0006		.0003	10	.026
2	5220-751-2295	1.1250-12NF-1	1.0606	2	1.1226 +.0006	1.0967 - .0006	1.0606 +.0003	.0002	6	.0208
1	5220-751-2296	1.1250-12NF-2	1.0653	1	1.1256	1.0473 + .0006		.0003	10	.026
2	5220-751-2297	1.1250-12NF-2	1.0653	2	1.1250 +.0006	1.1014 - .0006	1.0653 +.0003	.0002	6	.0208
1	5220-751-2298	1.1250-12NF-3	1.0669	1	1.1256	1.0489 + .0006		.0003	10	.026
2	5220-751-2299	1.1250-12NF-3	1.0669	2	1.1250 +.0006	1.1030 - .0006	1.0669 +.0003	.0002	6	.0208

* 1. LO (Not Go) Thread Ring Gage 2. Truncated Thread Setting Plug Gage

ORDBA Form 20-1578. (OT) 4 May 61

Downloaded from http://www.everyspec.com

Table II. Tabulation of Design and Identification Data - American National Standard Thread (Continued)

FIG. NO.	MARKING ON GAGE HANDLE				GAGE DIMENSIONS					
	MIL-STD PART NUMBER	THREAD DESIGNATION	LO PD	1	MAJOR DIA	MINOR DIA	———	TOL ON LEAD	HALF ANGLE TOL	ROOT CLEAR
			LO PD	2	MAJOR DIA FULL PORTION	MAJOR DIA TRUNCATED PORTION	PITCH DIA			
A	B	C	D	*	E	F	G	H	J	K
1	5220-751-2300	1.1250-16N-2	1.0790	1	1.1256	1.0655 + .0006		.0003	10	.020
2	5220-751-2301	1.1250-16N-2	1.0790	2	1.1250 +.0006	1.1061 - .0006	1.0790 +.0003	.00015	8	.0156
1	5220-751-2302	1.1250-16N-3	1.0806	1	1.1256	1.0671 + .0006		.0003	10	.020
2	5220-751-2303	1.1250-16N-3	1.0806	2	1.1250 +.0006	1.1077 - .0006	1.0806 +.0003	.00015	8	.0156
1	5220-751-2304	1.1250-18NEF-2	1.0837	1	1.1255	1.0717 + .0005		.0003	10	.017
2	5220-751-2305	1.1250-18NEF-2	1.0837	2	1.1250 +.0005	1.1078 - .0005	1.0837 +.0003	.00015	8	.0139
1	5220-751-5770	1.1250-18UNEF-3A-3	1.0853	1	1.1255	1.0733 + .0005		.0003	10	.017
2	5220-751-5771	1.1250-18UNEF-3A-3	1.0853	2	1.1250 +.0005	1.1094 - .0005	1.0853 +.0003	.00015	8	.0139
1	5220-751-2308	1.1875-12N-2	1.1278	1	1.1881	1.1098 + .0006		.0003	10	.026
2	5220-751-2309	1.1875-12N-2	1.1278	2	1.1875 +.0006	1.1639 - .0006	1.1278 +.0003	.0002	6	.0208
1	5220-751-2310	1.1875-12N-3	1.1294	1	1.1881	1.1114 + .0006		.0003	10	.026
2	5220-751-2311	1.1875-12N-3	1.1294	2	1.1875 +.0006	1.1655 - .0006	1.1294 +.0003	.0002	6	.0208
1	5220-751-2312	1.1875-16N-2	1.1415	1	1.1881	1.1280 + .0006		.0003	10	.020
2	5220-751-2313	1.1875-16N-2	1.1415	2	1.1875 +.0006	1.1686 - .0006	1.1415 +.0003	.00015	8	.0156
1	5220-751-2314	1.1875-16UN-3A-3	1.1431	1	1.1881	1.1296 + .0006		.0003	10	.020
2	5220-751-2315	1.1875-16UN-3A-3	1.1431	2	1.1875 +.0006	1.1702 - .0006	1.1431 +.0003	.00015	8	.0156
1	5220-751-2316	1.1875-18NEF-2	1.1462	1	1.1880	1.1342 + .0005		.0003	10	.017
2	5220-751-2317	1.1875-18NEF-2	1.1462	2	1.1875 +.0005	1.1703 - .0005	1.1462 +.0003	.00015	8	.0139
1	5220-751-5778	1.1875-18UNEF-3A-3	1.1478	1	1.1880	1.1358 + .0005		.0003	10	.017
2	5220-751-5779	1.1875-18UNEF-3A-3	1.1478	2	1.1875 +.0005	1.1719 .0005	1.1478 + .0003	.00015	8	.0139
1	5220-751-2320	1.2500-7NC-1	1.1409	1	1.2468	1.1100 + .0007		.0004	5	045
2	5220-751-2321	1.2500-7NC-1	1.1409	2	1.2461 +.0007	1.2028 - .0007	1.1409 +.0004	.0003	5	.0357

* 1. LO (Not Go) Thread Ring Gage 2. Truncated Thread Setting Plug Gage

ORDBA Form 20-1578 (OT) 4 May 61

Downloaded from http://www.everyspec.com

Table II. Tabulation of Design and Identification Data - American National Standard Thread (Continued)

FIG. NO.	MARKING ON GAGE HANDLE				GAGE DIMENSIONS					
	MIL-STD PART NUMBER	THREAD DESIGNATION	LO PD / LO PD	1 / 2	MAJOR DIA / MAJOR DIA FULL PORTION	MINOR DIA / MAJOR DIA TRUNCATED PORTION	PITCH DIA	TOL ON LEAD	HALF ANGLE TOL	ROOT CLEAR
A	B	C	D	*	E	F	G	H	J	K
1	5220-751-2322	1.2500-7NC-2	1.1487	1	1.2507	1.1178 + .0007		.0004	5	.045
2	5220-751-2323	1.2500-7NC-2	1.1487	2	1.2500 +.0007	1.2106 - .0007	1.1487 +.0004	.0003	5	.0357
1	5220-751-2324	1.2500-7NC-3	1.1513	1	1.2507	1.1204 + .0007		.0004	5	.045
2	5220-751-2325	1.2500-7NC-3	1.1513	2	1.2500 +.0007	1.2132 - .0007	1.1513 +.0004	.0003	5	.0357
1	5220-751-2326	1.2500-8N-2	1.1605	1	1.2507	1.1334 + .0007		.0004	5	.039
2	5220-751-2327	1.2500-8N-2	1.1605	2	1.2500 +.0007	1.2146 - .0007	1.1605 +.0004	.00025	5	.0312
1	5220-751-2328	1.2500-8N-3	1.1630	1	1.2507	1.1359 + .0007		.0004	5	.039
2	5220-751-2329	1.2500-8N-3	1.1630	2	1.2500 +.0007	1.2171 - .0007	1.1630 +.0004	.00025	5	.0312
1	5220-751-2330	1.2500-12NF-1	1.1856	1	1.2482	1.1676 + .0006		.0003	10	.026
2	5220-751-2331	1.2500-12NF-1	1.1856	2	1.2476 +.0006	1.2217 - .0006	1.1856 +.0003	.0002	6	.0208
1	5220-751-2332	1.2500-12NF-2	1.1903	1	1.2506	1.1723 + .0006		.0003	10	.026
2	5220-751-2333	1.2500-12NF-2	1.1903	2	1.2500 +.0006	1.2264 - .0006	1.1903 +.0003	.0002	6	.0208
1	5220-751-2334	1.2500-12NF-3	1.1919	1	1.2506	1.1739 + .0006		.0003	10	.026
2	5220-751-2335	1.2500-12NF-3	1.1919	2	1.2500 +.0006	1.2280 - .0006	1.1919 +.0003	.0002	6	.0208
1	5220-751-2336	1.2500-16N-2	1.2039	1	1.2506	1.1904 + .0006		.0003	10	.020
2	5220-751-2337	1.2500-16N-2	1.2039	2	1.2500 +.0006	1.2310 - .0006	1.2039 +.0003	.00015	8	.0156
1	5220-751-2338	1.2500-16UN-3A-3	1.2056	1	1.2506	1.1921 + .0006		.0003	10	.020
2	5220-751-2339	1.2500-16UN-3A-3	1.2056	2	1.2500 +.0006	1.2327 - .0006	1.2056 +.0003	.00015	8	.0156
1	5220-751-2340	1.2500-18NEF-2	1.2086	1	1.2505	1.1966 + .0005		.0003	10	.017
2	5220-751-2341	1.2500-18NEF-2	1.2086	2	1.2500 +.0005	1.2327 - .0005	1.2086 +.0003	.00015	8	.0139
1	5220-751-2342	1.2500-18NEF-3	1.2102	1	1.2505	1.1982 + .0005		.0003	10	.017
2	5220-751-2343	1.2500-18NEF-3	1.2102	2	1.2500 +.0005	1.2343 - .0005	1.2102 +.0003	.00015	8	.0139

* 1. LO (Not Go) Thread Ring Gage 2. Truncated Thread Setting Plug Gage

ORDBA Form 20-1578, (OT) 4 May 61

Downloaded from http://www.everyspec.com

Table II. Tabulation of Design and Identification Data - American National Standard Thread (Continued)

FIG. NO.	MARKING ON GAGE HANDLE				GAGE DIMENSIONS					
	MIL-STD PART NUMBER	THREAD DESIGNATION	LO PD / LO PD	1 / 2	MAJOR DIA / MAJOR DIA FULL PORTION	MINOR DIA / MAJOR DIA TRUNCATED PORTION	——— / PITCH DIA	TOL ON LEAD	HALF ANGLE TOL	ROOT CLEAR
A	B	C	D	*	E	F	G	H	J	K
1	5220-751-2344	1.3125-12N-2	1.2528	1	1.3131	1.2348 + .0006		.0003	10	.026
2	5220-751-2345	1.3125-12N-2	1.2528	2	1.3125 +.0006	1.2889 - .0006	1.2528 +.0003	.0002	6	.0208
1	5220-751-2346	1.3125-12N-3	1.2544	1	1.3131	1.2364 + .0006		.0003	10	.026
2	5220-751-2347	1.3125-12N-3	1.2544	2	1.3125 +.0006	1.2905 - .0006	1.2544 +.0003	.0002	6	.0208
1	5220-751-2348	1.3125-16N-2	1.2664	1	1.3131	1.2529 + .0006		.0003	10	.020
2	5220-751-2349	1.3125-16N-2	1.2664	2	1.3125 +.0006	1.2935 - .0006	1.2664 +.0003	.00015	8	.0156
1	5220-751-2350	1.3125-16N-3	1.2680	1	1.3131	1.2545 + .0006		.0003	10	.020
2	5220-751-2351	1.3125-16N-3	1.2680	2	1.3125 +.0006	1.2951 - .0006	1.2680 +.0003	.00015	8	.0156
1	5220-751-2352	1.3125-18NEF-2	1.2711	1	1.3130	1.2591 + .0005		.0003	10	.017
2	5220-751-2353	1.3125-18NEF-2	1.2711	2	1.3125 +.0005	1.2952 - .0005	1.2711 +.0003	.00015	8	.0139
1	5220-751-2354	1.3125-18NEF-2	1.2727	1	1.3130	1.2607 + .0005		.0003	10	.017
2	5220-751-2355	1.3125-18NEF-2	1.2727	2	1.3125 +.0005	1.2968 - .0005	1.2727 +.0003	.00015	8	.0139
1	5220-751-2356	1.3750-6NC-1	1.2478	1	1.3714	1.2117 + .0008		.0004	5	.052
2	5220-751-2357	1.3750-6NC-1	1.2478	2	1.3706 +.0008	1.3200 - .0008	1.2478 +.0004	.0003	5	.0417
1	5220-751-2358	1.3750-6NC-2	1.2566	1	1.3758	1.2205 + .0008		.0004	5	.052
2	5220-751-2359	1.3750-6NC-2	1.2566	2	1.3750 +.0008	1.3288 - .0008	1.2566 +.0004	.0003	5	.0417
1	5220-751-2360	1.3750-6NC-3	1.2596	1	1.3758	1.2235 + .0008		.0004	5	.052
2	5220-751-2361	1.3750-6NC-3	1.2596	2	1.3750 +.0008	1.3318 - .0008	1.2596 +.0004	.0003	5	.0417
1	5220-751-2362	1.3750-8N-2	1.2852	1	1.3757	1.2581 + .0007		.0004	5	.039
2	5220-751-2363	1.3750-8N-2	1.2852	2	1.3750 +.0007	1.3393 - .0007	1.2852 +.0004	.00025	5	.0312
1	5220-751-2364	1.3750-8N-3	1.2877	1	1.3757	1.2606 + .0007		.0004	5	.039
2	5220-751-2365	1.3750-8N-3	1.2877	2	1.3750 +.0007	1.3418 - .0007	1.2877 +.0004	.00025	5	.0312

* 1. LO (Not Go) Thread Ring Gage 2. Truncated Thread Setting Plug Gage

ORDBA Form 20-1578, (OT) 4 May 61

Downloaded from http://www.everyspec.com

Table II. Tabulation of Design and Identification Data - American National Standard Thread (Continued)

FIG. NO.	MARKING ON GAGE HANDLE			GAGE DIMENSIONS						
	MIL-STD PART NUMBER	THREAD DESIGNATION	LO PD	1	MAJOR DIA	MINOR DIA		TOL ON LEAD	HALF ANGLE TOL	ROOT CLEAR
			LO PD	2	MAJOR DIA FULL PORTION	MAJOR DIA TRUNCATED PORTION	PITCH DIA			
A	B	C	D	*	E	F	G	H	J	K
1	5220-751-2366	1.3750-12NF-1	1.3106	1	1.3732	1.2926 + .0006		.0003	10	.026
2	5220-751-2367	1.3750-12NF-1	1.3106	2	1.3726 +.0006	1.3467 - .0006	1.3106 +.0003	.0002	6	.0208
1	5220-751-2368	1.3750-12NF-2	1.3153	1	1.3756	1.2973 + .0006		.0003	10	.026
2	5220-751-2369	1.3750-12NF-2	1.3153	2	1.3750 +.0006	1.3514 - .0006	1.3153 +.0003	.0002	6	.0208
1	5220-751-2370	1.3750-12NF-3	1.3169	1	1.3756	1.2989 + .0006		.0003	10	.026
2	5220-751-2371	1.3750-12NF-3	1.3169	2	1.3750 +.0006	1.3530 - .0006	1.3169 +.0003	.0002	6	.0208
1	5220-751-2372	1.3750-16N-2	1.3288	1	1.3756	1.3153 + .0006		.0003	10	.020
2	5220-751-2373	1.3750-16N-2	1.3288	2	1.3750 +.0006	1.3559 - .0006	1.3288 +.0003	.00015	8	.0156
1	5220-751-2374	1.3750-16N-3	1.3305	1	1.3756	1.3170 + .0006		.0003	10	.020
2	5220-751-2375	1.3750-16N-3	1.3305	2	1.3750 +.0006	1.3576 - .0006	1.3305 +.0003	.00015	8	.0156
1	5220-751-2376	1.3750-18NEF-2	1.3335	1	1.3755	1.3215 + .0005		.0003	10	.017
2	5220-751-2377	1.3750-18NEF-2	1.3335	2	1.3750 +.0005	1.3576 - .0005	1.3335 +.0003	.00015	8	.0139
1	5220-751-2378	1.3750-18NEF-3	1.3351	1	1.3755	1.3231 + .0005		.0003	10	.017
2	5220-751-2379	1.3750-18NEF-3	1.3351	2	1.3750 +.0005	1.3592 - .0005	1.3351 +.0003	.00015	8	.0139
1	5220-751-2380	1.4375-12N-2	1.3778	1	1.4381	1.3598 + .0006		.0003	10	.026
2	5220-751-2381	1.4375-12N-2	1.3778	2	1.4375 +.0006	1.4139 - .0006	1.3778 +.0003	.0002	6	.0208
1	5220-751-2382	1.4375-12N-3	1.3794	1	1.4381	1.3614 + .0006		.0003	10	.026
2	5220-751-2383	1.4375-12N-3	1.3794	2	1.4375 +.0006	1.4155 - .0006	1.3794 +.0003	.0002	6	.0208
1	5220-751-2384	1.4375-16N-2	1.3913	1	1.4381	1.3778 + .0006		.0003	10	.020
2	5220-751-2385	1.4375-16N-2	1.3913	2	1.4375 +.0006	1.4184 - .0006	1.3913 +.0003	.00015	8	.0156
1	5220-751-2386	1.4375-16N-3	1.3929	1	1.4381	1.3794 + .0006		.0003	10	.020
2	5220-751-2387	1.4375-16N-3	1.3929	2	1.4375 +.0006	1.4200 - .0006	1.3929 +.0003	.00015	8	.0156

* 1. LO (Not Go) Thread Ring Gage 2. Truncated Thread Setting Plug Gage

ORDBA Form 20-1578, (OT) 4 May 61

Downloaded from http://www.everyspec.com

Table II. Tabulation of Design and Identification Data - American National Standard Thread (Continued)

FIG. NO.	MARKING ON GAGE HANDLE				GAGE DIMENSIONS					
	MIL-STD PART NUMBER	THREAD DESIGNATION	LO PD / LO PD	1 / 2	MAJOR DIA / MAJOR DIA FULL PORTION	MINOR DIA / MAJOR DIA TRUNCATED PORTION	PITCH DIA	TOL ON LEAD	HALF ANGLE TOL	ROOT CLEAR
A	B	C	D	*	E	F	G	H	J	K
1	5220-751-2388	1.4375-18NEF-2	1.3960	1	1.4380	1.3840 + .0005		.0003	10	.017
2	5220-751-2389	1.4375-18NEF-2	1.3960	2	1.4375 +.0005	1.4201 - .0005	1.3960 +.0003	.00015	8	.0139
1	5220-751-2390	1.4375-18NEF-3	1.3976	1	1.4380	1.3856 + .0005		.0003	10	.017
2	5220-751-2391	1.4375-18NEF-3	1.3976	2	1.4375 +.0005	1.4217 - .0005	1.3976 +.0003	.00015	8	.0139
1	5220-751-2392	1.5000-6NC-1	1.3728	1	1.4964	1.3367 + .0008		.0004	5	.052
2	5220-751-2393	1.5000-6NC-1	1.3728	2	1.4956 +.0008	1.4450 - .0008	1.3728 +.0004	.0003	5	.0417
1	5220-751-2394	1.5000-6NC-2	1.3816	1	1.5008	1.3455 + .0008		.0004	5	.052
2	5220-751-2395	1.5000-6NC-2	1.3816	2	1.5000 +.0008	1.4538 - .0008	1.3816 +.0004	.0003	5	.0417
1	5220-751-2396	1.5000-6NC-3	1.3846	1	1.5008	1.3485 + .0008		.0004	5	.052
2	5220-751-2397	1.5000-6NC-3	1.3846	2	1.5000 +.0008	1.4568 - .0008	1.3846 +.0004	.0003	5	.0417
1	5220-751-2398	1.5000-8N-2	1.4098	1	1.5007	1.3827 + .0007		.0004	5	.039
2	5220-751-2399	1.5000-8N-2	1.4098	2	1.5000 +.0007	1.4639 - .0007	1.4098 +.0004	.00025	5	.0312
1	5220-751-2400	1.5000-8N-3	1.4125	1	1.5007	1.3854 + .0007		.0004	5	.039
2	5220-751-2401	1.5000-8N-3	1.4125	2	1.5000 +.0007	1.4666 - .0007	1.4125 +.0004	.00025	5	.0312
1	5220-751-2402	1.5000-12NF-1	1.4356	1	1.4982	1.4176 + .0006		.0003	10	.026
2	5220-751-2403	1.5000-12NF-1	1.4356	2	1.4976 +.0006	1.4717 - .0006	1.4356 +.0003	.0002	6	.0208
1	5220-751-2404	1.5000-12NF-2	1.4403	1	1.5006	1.4223 + .0006		.0003	10	.026
2	5220-751-2405	1.5000-12NF-2	1.4403	2	1.5000 +.0006	1.4764 - .0006	1.4403 +.0003	.0002	6	.0208
1	5220-751-2406	1.5000-12NF-3	1.4419	1	1.5006	1.4239 + .0006		.0003	10	.026
2	5220-751-2407	1.5000-12NF-3	1.4419	2	1.5000 +.0006	1.4780 - .0006	1.4419 +.0003	.0002	6	.0208
1	5220-751-2408	1.5000-16N-2	1.4537	1	1.5006	1.4402 + .0006		.0003	10	.020
2	5220-751-2409	1.5000-16N-2	1.4537	2	1.5000 +.0006	1.4808 - .0006	1.4537 +.0003	.00015	8	.0156

* 1. LO (Not Go) Thread Ring Gage 2. Truncated Thread Setting Plug Gage

ORDBA Form 20-1578, (OT) 4 May 61

Downloaded from http://www.everyspec.com

Table II. Tabulation of Design and Identification Data - American National Standard Thread (Continued)

FIG. NO.	MARKING ON GAGE HANDLE				GAGE DIMENSIONS					
	MIL-STD PART NUMBER	THREAD DESIGNATION	LO PD	1	MAJOR DIA	MINOR DIA		TOL ON LEAD	HALF ANGLE TOL	ROOT CLEAR
			LO PD	2	MAJOR DIA FULL PORTION	MAJOR DIA TRUNCATED PORTION	PITCH DIA			
A	B	C	D	*	E	F	G	H	J	K
1	5220-751-2410	1.5000-16N-3	1.4554	1	1.5006	1.4419 + .0006		.0003	10	.020
2	5220-751-2411	1.5000-16N-3	1.4554	2	1.5000 +.0006	1.4825 - .0006	1.4554 +.0003	.00015	8	.0156
1	5220-751-2412	1.5000-18NEF-2	1.4584	1	1.5005	1.4464 + .0005		.0003	10	.017
2	5220-751-2413	1.5000-18NEF-2	1.4584	2	1.5000 +.0005	1.4825 - .0005	1.4584 +.0003	.00015	8	.0139
1	5220-751-2414	1.5000-18NEF-3	1.4601	1	1.5005	1.4481 + .0005		.0003	10	.017
2	5220-751-2415	1.5000-18NEF-3	1.4601	2	1.5000 +.0005	1.4842 - .0005	1.4601 +.0003	.00015	8	.0139
1	5220-751-2416	1.5625-16N-2	1.5161	1	1.5631	1.5026 + .0006		.0003	10	.020
3	5220-751-2417	1.5625-16N-2	1.5161	2	1.5625 +.0006	1.5432 - .0006	1.5161 +.0004	.00015	8	.0156
1	5220-751-2418	1.5625-16N-3	1.5179	1	1.5631	1.5044 + .0006		.0003	10	.020
3	5220-751-2419	1.5625-16N-3	1.5179	2	1.5625 +.0006	1.5450 - .0006	1.5179 +.0004	.00015	8	.0156
1	5220-751-2420	1.5625-18NEF-2	1.5209	1	1.5630	1.5089 + .0005		.0003	10	.017
3	5220-751-2421	1.5625-18NEF-2	1.5209	2	1.5625 +.0005	1.5450 - .0005	1.5209 +.0004	.00015	8	.0139
1	5220-751-2422	1.5625-18NEF-3	1.5225	1	1.5630	1.5105 + .0005		.0003	10	.017
3	5220-751-2423	1.5625-18NEF-3	1.5225	2	1.5625 +.0005	1.5466 - .0005	1.5225 +.0004	.00015	8	.0139
1	5220-751-2424	1.6250-8N-2	1.5345	1	1.6257	1.5074 + .0007		.0004	5	.039
3	5220-751-2425	1.6250-8N-2	1.5345	2	1.6250 +.0007	1.5886 - .0007	1.5345 +.0005	.00025	5	.0312
1	5220-751-2426	1.6250-8N-3	1.5373	1	1.6257	1.5102 + .0007		.0004	5	.039
3	5220-751-2427	1.6250-8N-3	1.5373	2	1.6250 +.0007	1.5914 - .0007	1.5373 +.0005	.00025	5	.0312
1	5220-751-2428	1.6250-12N-2	1.5645	1	1.6256	1.5465 + .0006		.0003	10	.026
3	5220-751-2429	1.6250-12N-2	1.5645	2	1.6250 +.0006	1.6006 - .0006	1.5645 +.0004	.0002	6	.0208
1	5220-751-2430	1.6250-12N-3	1.5664	1	1.6256	1.5484 + .0006		.0003	10	.026
3	5220-751-2431	1.6250-12N-3	1.5664	2	1.6250 +.0006	1.6025 - .0006	1.5664 +.0004	.0002	6	.0208

* 1. LO (Not Go) Thread Ring Gage 2. Truncated Thread Setting Plug Gage

ORDBA Form 20-1578, (OT) 4 May 61

Downloaded from http://www.everyspec.com

Table II. Tabulation of Design and Identification Data - American National Standard Thread (Continued)

FIG. NO.	MARKING ON GAGE HANDLE				GAGE DIMENSIONS					
	MIL-STD PART NUMBER	THREAD DESIGNATION	LO PD / LO PD	1 / 2	MAJOR DIA / MAJOR DIA FULL PORTION	MINOR DIA / MAJOR DIA TRUNCATED PORTION	PITCH DIA	TOL ON LEAD	HALF ANGLE TOL	ROOT CLEAR
A	B	C	D	*	E	F	G	H	J	K
1	5220-751-2432	1.6250-16N-2	1.5786	1	1.6256	1.5651 + .0006		.0003	10	.020
3	5220-751-2433	1.6250-16N-2	1.5786	2	1.6250 +.0006	1.6057 - .0006	1.5786 +.0004	.00015	8	.0156
1	5220-751-2434	1.6250-16N-3	1.5803	1	1.6256	1.5668 + .0006		.0003	10	.020
3	5220-751-2435	1.6250-16N-3	1.5803	2	1.6250 +.0006	1.6074 - .0006	1.5803 +.0004	.00015	8	.0156
1	5220-751-2436	1.6250-18NEF-2	1.5833	1	1.6255	1.5713 + .0005		.0003	10	.017
3	5220-751-2437	1.6250-18NEF-2	1.5833	2	1.6250 +.0005	1.6074 - .0005	1.5833 +.0004	.00015	8	.0139
1	5220-751-2438	1.6250-18NEF-3	1.5850	1	1.6255	1.5730 + .0005		.0003	10	.017
3	5220-751-2439	1.6250-18NEF-3	1.5850	2	1.6250 +.0005	1.6091 - .0005	1.5850 +.0004	.00015	8	.0139
1	5220-751-2440	1.6875-16N-2	1.6411	1	1.6881	1.6276 + .0006		.0003	10	.020
3	5220-751-2441	1.6875-16N-2	1.6411	2	1.6875 +.0006	1.6682 - .0006	1.6411 +.0004	.00015	8	.0156
1	5220-751-2442	1.6875-16N-3	1.6428	1	1.6881	1.6293 + .0006		.0003	10	.020
3	5220-751-2443	1.6875-16N-3	1.6428	2	1.6875 +.0006	1.6699 - .0006	1.6428 +.0004	.00015	8	.0156
1	5220-751-2444	1.6875-18NEF-2	1.6458	1	1.6880	1.6338 + .0005		.0003	10	.017
3	5220-751-2445	1.6875-18NEF-2	1.6458	2	1.6875 +.0005	1.6699 - .0005	1.6458 +.0004	.00015	8	.0139
1	5220-751-2446	1.6875-18NEF-3	1.6475	1	1.6880	1.6355 + .0005		.0003	10	.017
3	5220-751-2447	1.6875-18NEF-3	1.6475	2	1.6875 +.0005	1.6716 - .0005	1.6475 +.0004	.00015	8	.0139
1	5220-751-2448	1.7500-5NC-1	1.5980	1	1.7456	1.5547 + .0008		.0004	5	.062
3	5220-751-2449	1.7500-5NC-1	1.5980	2	1.7448 +.0008	1.6846 - .0008	1.5980 +.0005	.0003	4	.0500
1	5220-751-2450	1.7500-5NC-2	1.6085	1	1.7508	1.5652 + .0008		.0004	5	.062
3	5220-751-2451	1.7500-5NC-2	1.6085	2	1.7500 +.0008	1.6951 - .0008	1.6085 +.0005	.0003	4	.0500
1	5220-751-2452	1.7500-5NC-3	1.6119	1	1.7508	1.5686 + .0008		.0004	5	.062
3	5220-751-2453	1.7500-5NC-3	1.6119	2	1.7500 +.0008	1.6985 - .0008	1.6119 +.0005	.0003	4	.0500

* 1. LO (Not Go) Thread Ring Gage 2. Truncated Thread Setting Plug Gage

ORDBA Form 20-1578. (OT) 4 May 61

Downloaded from http://www.everyspec.com

Table II. Tabulation of Design and Identification Data - American National Standard Thread (Continued)

FIG. NO.	MARKING ON GAGE HANDLE				GAGE DIMENSIONS					
	MIL-STD PART NUMBER	THREAD DESIGNATION	LO PD / LO PD	1 / 2	MAJOR DIA / MAJOR DIA FULL PORTION	MINOR DIA / MAJOR DIA TRUNCATED PORTION	PITCH DIA	TOL ON LEAD	HALF ANGLE TOL	ROOT CLEAR
A	B	C	D	*	E	F	G	H	J	K
1	5220-751-2454	1.7500-8N-2	1.6591	1	1.7507	1.6320 + .0007		.0004	5	.039
3	5220-751-2455	1.7500-8N-2	1.6591	2	1.7500 +.0007	1.7132 - .0007	1.6591 +.0005	.00025	5	.0312
1	5220-751-2456	1.7500-8N-3	1.6620	1	1.7507	1.6349 + .0007		.0004	5	.039
3	5220-751-2457	1.7500-8N-3	1.6620	2	1.7500 +.0007	1.7161 - .0007	1.6620 +.0005	.00025	5	.0312
1	5220-751-2458	1.7500-12N-2	1.6894	1	1.7506	1.6714 + .0006		.0003	10	.026
3	5220-751-2459	1.7500-12N-2	1.6894	2	1.7500 +.0006	1.7255 - .0006	1.6894 +.0004	.0002	6	.0208
1	5220-751-2460	1.7500-12N-3	1.6913	1	1.7506	1.6733 + .0006		.0003	10	.026
3	5220-751-2461	1.7500-12N-3	1.6913	2	1.7500 +.0006	1.7274 - .0006	1.6913 +.0004	.0002	6	.0208
1	5220-751-2462	1.7500-16NEF-2	1.7035	1	1.7506	1.6900 + .0006		.0003	10	.020
3	5220-751-2463	1.7500-16NEF-2	1.7035	2	1.7500 +.0006	1.7306 - .0006	1.7035 +.0004	.00015	8	.0156
1	5220-751-2464	1.7500-16NEF-3	1.7053	1	1.7506	1.6918 + .0006		.0003	10	.020
3	5220-751-2465	1.7500-16NEF-3	1.7053	2	1.7500 +.0006	1.7324 - .0006	1.7053 +.0004	.00015	8	.0156
1	5220-751-2466	1.8125-16N-2	1.7660	1	1.8131	1.7525 + .0006		.0003	10	.020
3	5220-751-2467	1.8125-16N-2	1.7660	2	1.8125 +.0006	1.7931 - .0006	1.7660 +.0004	.00015	8	.0156
1	5220-751-2468	1.8125-16N-3	1.7677	1	1.8131	1.7542 + .0006		.0003	10	.020
1	5220-751-2469	1.8125-16N-3	1.7677	2	1.8125 +.0006	1.7948 - .0006	1.7677 +.0004	.00015	8	.0156
1	5220-751-2470	1.8750-8N-2	1.7838	1	1.8757	1.7567 + .0007		.0004	5	.039
3	5220-751-2471	1.8750-8N-2	1.7838	2	1.8750 +.0007	1.8379 - .0007	1.7838 +.0005	.00025	5	.0312
1	5220-751-2472	1.8750-8N-3	1.7868	1	1.8757	1.7597 + .0007		.0004	5	.039
3	5220-751-2473	1.8750-8N-3	1.7868	2	1.8750 +.0007	1.8409 - .0007	1.7868 +.0005	.00025	5	.0312
1	5220-751-2474	1.8750-12N-2	1.8143	1	1.8756	1.7963 + .0006		.0003	10	.026
3	5220-751-2475	1.8750-12N-2	1.8143	2	1.8750 +.0006	1.8504 - .0006	1.8143 +.0004	.0002	6	.0208

* 1. LO (Not Go) Thread Ring Gage 2. Truncated Thread Setting Plug Gage

GEDBA Form 20-1578, (OT) 4 May 61

Downloaded from http://www.everyspec.com

Table II. Tabulation of Design and Identification Data - American National Standard Thread (Continued)

FIG. NO.	MARKING ON GAGE HANDLE				GAGE DIMENSIONS					
	MIL-STD PART NUMBER	THREAD DESIGNATION	LO PD / LO PD	1 / 2	MAJOR DIA / MAJOR DIA FULL PORTION	MINOR DIA / MAJOR DIA TRUNCATED PORTION	PITCH DIA	TOL ON LEAD	HALF ANGLE TOL	ROOT CLEAR
A	B	C	D	*	E	F	G	H	J	K
1	5220-751-2476	1.8750-12N-3	1.8163	1	1.8756	1.7983 + .0006		.0003	10	.026
3	5220-751-2477	1.8750-12N-3	1.8163	2	1.8750 +.0006	1.8524 - .0006	1.8163 +.0004	.0002	6	.0208
1	5220-751-2478	1.8750-16N-2	1.8284	1	1.8756	1.8149 + .0006		.0003	10	.020
3	5220-751-2479	1.8750-16N-2	1.8284	2	1.8750 +.0006	1.8555 - .0006	1.8284 +.0004	.00015	8	.0156
1	5220-751-2480	1.8750-16N-3	1.8302	1	1.8756	1.8167 + .0006		.0003	10	.020
3	5220-751-2481	1.8750-16N-3	1.8302	2	1.8750 +.0006	1.8573 - .0006	1.8302 +.0004	.00015	8	.0156
1	5220-751-2482	1.9375-16N-2	1.8909	1	1.9381	1.8774 + .0006		.0003	10	.020
3	5220-751-2483	1.9375-16N-2	1.8909	2	1.9375 +.0006	1.9180 - .0006	1.8909 +.0004	.00015	8	.0156
1	5220-751-2484	1.9375-16N-3	1.8927	1	1.9381	1.8792 + .0006		.0003	10	.020
3	5220-751-2485	1.9375-16N-3	1.8927	2	1.9375 +.0006	1.9198 - .0006	1.8927 +.0004	.00015	8	.0156
1	5220-751-2486	2.0000-4½NC-1	1.8316	1	1.9951	1.7835 + .0008		.0004	5	.069
3	5220-751-2487	2.0000-4½NC-1	1.8316	2	1.9943 +.0008	1.9278 - .0008	1.8316 +.0005	.0003	4	.0556
1	5220-751-2488	2.0000-4½NC-2	1.8430	1	2.0008	1.7949 + .0008		.0004	5	.069
3	5220-751-2489	2.0000-4½NC-2	1.8430	2	2.0000 +.0008	1.9392 - .0008	1.8430 +.0005	.0003	4	.0556
1	5220-751-2490	2.0000-4½NC-3	1.8468	1	2.0008	1.7987 + .0008		.0004	5	.069
3	5220-751-2491	2.0000-4½NC-3	1.8468	2	2.0000 +.0008	1.9430 - .0008	1.8468 +.0005	.0003	4	.0556
1	5220-751-2492	2.0000-8N-2	1.9084	1	2.0007	1.8813 + .0007		.0004	5	.039
3	5220-751-2493	2.0000-8N-2	1.9084	2	2.0000 +.0007	1.9625 - .0007	1.9084 +.0005	.00025	5	.0312
1	5220-751-2494	2.0000-8N-3	1.9115	1	2.0007	1.8844 + .0007		.0004	5	.039
3	5220-751-2495	2.0000-8N-3	1.9115	2	2.0000 +.0007	1.9656 - .0007	1.9115 +.0005	.00025	5	.0312
1	5220-751-2496	2.0000-12N-2	1.9392	1	2.0006	1.9212 + .0006		.0003	10	.026
3	5220-751-2497	2.0000-12N-2	1.9392	2	2.0000 +.0006	1.9753 - .0006	1.9392 +.0004	.0002	6	.0208

* 1. LO (Not Go) Thread Ring Gage 2. Truncated Thread Setting Plug Gage

ORDBA Form 20-1578, (OT) 4 May 61

Downloaded from http://www.everyspec.com

Table II. Tabulation of Design and Identification Data - American National Standard Thread (Continued)

FIG. NO.	MARKING ON GAGE HANDLE				GAGE DIMENSIONS					
	MIL-STD PART NUMBER	THREAD DESIGNATION	LO PD / LO PD	1 / 2	MAJOR DIA / MAJOR DIA FULL PORTION	MINOR DIA / MAJOR DIA TRUNCATED PORTION	PITCH DIA	TOL ON LEAD	HALF ANGLE TOL	ROOT CLEAR
A	B	C	D	*	E	F	G	H	J	K
1	5220-751-2498	2.0000-12N-3	1.9412	1	2.0006	1.9232 + .0006		.0003	10	.026
3	5220-751-2499	2.0000-12N-3	1.9412	2	2.0000 +.0006	1.9773 - .0006	1.9412 +.0004	.0002	6	.0208
1	5220-751-2500	2.0000-16NEF-2	1.9533	1	2.0006	1.9398 + .0006		.0003	10	.020
3	5220-751-2501	2.0000-16NEF-2	1.9533	2	2.0000 +.0006	1.9804 - .0006	1.9533 +.0004	.00015	8	.0156
1	5220-751-2502	2.0000-16NEF-3	1.9551	1	2.0006	1.9416 + .0006		.0003	10	.020
3	5220-751-2503	2.0000-16NEF-3	1.9551	2	2.0000 +.0006	1.9822 - .0006	1.9551 +.0004	.00015	8	.0156
1	5220-751-2504	2.0625-16N-2	2.0158	1	2.0631	2.0023 + .0006		.0003	10	.020
3	5220-751-2505	2.0625-16N-2	2.0158	2	2.0625 +.0006	2.0429 - .0006	2.0158 +.0004	.00015	8	.0156
1	5220-751-2506	2.0625-16N-3	2.0176	1	2.0631	2.0041 + .0006		.0003	10	.020
3	5220-751-2507	2.0625-16N-3	2.0176	2	2.0625 +.0006	2.0447 - .0006	2.0176 +.0004	.00015	8	.0156
1	5220-751-2508	2.1250-8N-2	2.0331	1	2.1257	2.0060 + .0007		.0004	5	.039
3	5220-751-2509	2.1250-8N-2	2.0331	2	2.1250 +.0007	2.0872 - .0007	2.0331 +.0005	.00025	5	.0312
1	5220-751-2510	2.1250-8N-3	2.0363	1	2.1257	2.0092 + .0007		.0004	5	.039
3	5220-751-2511	2.1250-8N-3	2.0363	2	2.1250 +.0007	2.0904 - .0007	2.0363 +.0005	.00025	5	.0312
1	5220-751-2512	2.1250-12N-2	2.0641	1	2.1256	2.0461 + .0006		.0003	10	.026
3	5220-751-2513	2.1250-12N-2	2.0641	2	2.1250 +.0006	2.1002 - .0006	2.0641 +.0004	.0002	6	.0208
1	5220-751-2514	2.1250-12N-3	2.0661	1	2.1256	2.0481 + .0006		.0003	10	.026
3	5220-751-2515	2.1250-12N-3	2.0661	2	2.1250 +.0006	2.1022 - .0006	2.0661 +.0004	.0002	6	.0208
1	5220-751-2516	2.1250-16N-2	2.0782	1	2.1256	2.0647 + .0006		.0003	10	.020
3	5220-751-2517	2.1250-16N-2	2.0782	2	2.1250 +.0006	2.1053 - .0006	2.0782 +.0004	.00015	8	.0156
1	5220-751-2518	2.1250-16N-3	2.0801	1	2.1256	2.0666 + .0006		.0003	10	.020
3	5220-751-2519	2.1250-16N-3	2.0801	2	2.1250 +.0006	2.1072 - .0006	2.0801 +.0004	.00015	8	.0156

* 1. LO (Not Go) Thread Ring Gage 2. Truncated Thread Setting Plug Gage

ORDBA Form 20-1578, (OT) 4 May 61

Downloaded from http://www.everyspec.com

Table II. Tabulation of Design and Identification Data - American National Standard Thread (Continued)

FIG. NO.	MARKING ON GAGE HANDLE				GAGE DIMENSIONS					
	MIL-STD PART NUMBER	THREAD DESIGNATION	LO PD	1	MAJOR DIA	MINOR DIA	———	TOL ON LEAD	HALF ANGLE TOL	ROOT CLEAR
			LO PD	2	MAJOR DIA FULL PORTION	MAJOR DIA TRUNCATED PORTION	PITCH DIA			
A	B	C	D	*	E	F	G	H	J	K
1	5220-751-2520	2.1875-16N-2	2.1407	1	2.1881	2.1272 + .0006		.0003	10	.020
3	5220-751-2521	2.1875-16N-2	2.1407	2	2.1875 +.0006	2.1678 - .0006	2.1407 +.0004	.00015	8	.0156
1	5220-751-2522	2.1875-16N-3	2.1426	1	2.1881	2.1291 + .0006		.0003	10	.020
3	5220-751-2523	2.1875-16N-3	2.1426	2	2.1875 +.0006	2.1697 - .0006	2.1426 +.0004	.00015	8	.0156
1	5220-751-2524	2.2500-4½NC-1	2.0816	1	2.2451	2.0335 + .0008		.0004	5	.069
3	5220-751-2525	2.2500-4½NC-1	2.0816	2	2.2443 +.0008	2.1778 - .0008	2.0816 +.0005	.0003	4	.0556
1	5220-751-2526	2.2500-4½NC-2	2.0930	1	2.2508	2.0449 + .0008		.0004	5	.069
3	5220-751-2527	2.2500-4½NC-2	2.0930	2	2.2500 +.0008	2.1892 - .0008	2.0930 +.0005	.0003	4	.0556
1	5220-751-2528	2.2500-4½NC-3	2.0968	1	2.2508	2.0487 + .0008		.0004	5	.069
3	5220-751-2529	2.2500-4½NC-3	2.0968	2	2.2500 +.0008	2.1930 - .0008	2.0968 +.0005	.0003	4	.0556
1	5220-751-2530	2.2500-8N-2	2.1578	1	2.2507	2.1307 + .0007		.0004	5	.039
3	5220-751-2531	2.2500-8N-2	2.1578	2	2.2500 +.0007	2.2119 - .0007	2.1578 +.0005	.00025	5	.0312
1	5220-751-2532	2.2500-8N-3	2.1611	1	2.2507	2.1340 + .0007		.0004	5	.039
3	5220-751-2533	2.2500-8N-3	2.1611	2	2.2500 +.0007	2.2152 - .0007	2.1611 +.0005	.00025	5	.0312
1	5220-751-2534	2.2500-12N-2	2.1890	1	2.2506	2.1710 + .0006		.0003	10	.026
3	5220-751-2535	2.2500-12N-2	2.1890	2	2.2500 +.0006	2.2251 - .0006	2.1890 +.0004	.0002	6	.0208
1	5220-751-2536	2.2500-12N-3	2.1911	1	2.2506	2.1731 + .0006		.0003	10	.026
3	5220-751-2537	2.2500-12N-3	2.1911	2	2.2500 +.0006	2.2272 - .0006	2.1911 +.0004	.0002	6	.0208
1	5220-751-2538	2.2500-16N-2	2.2032	1	2.2506	2.1897 + .0006		.0003	10	.020
3	5220-751-2539	2.2500-16N-2	2.2032	2	2.2500 +.0006	2.2303 - .0006	2.2032 +.0004	.00015	8	.0156
1	5220-751-2540	2.2500-16N-3	2.2050	1	2.2506	2.1915 + .0006		.0003	10	.020
3	5220-751-2541	2.2500-16N-3	2.2050	2	2.2500 +.0006	2.2321 - .0006	2.2050 +.0004	.00015	8	.0156

* 1. LO (Not Go) Thread Ring Gage 2. Truncated Thread Setting Plug Gage

ORDBA Form 20-1578, (OT) 4 May 61

Downloaded from http://www.everyspec.com

Table II. Tabulation of Design and Identification Data - American National Standard Thread (Continued)

FIG. NO.	MARKING ON GAGE HANDLE				GAGE DIMENSIONS					
	MIL-STD PART NUMBER	THREAD DESIGNATION	LO PD	1	MAJOR DIA	MINOR DIA	———	TOL ON LEAD	HALF ANGLE TOL	ROOT CLEAR
			LO PD	2	MAJOR DIA FULL PORTION	MAJOR DIA TRUNCATED PORTION	PITCH DIA			
A	B	C	D	*	E	F	G	H	J	K
1	5220-751-2542	2.3125-16N-2	2.2656	1	2.3131	2.2521 + .0006		.0003	10	.020
3	5220-751-2543	2.3125-16N-2	2.2656	2	2.3125 +.0006	2.2927 - .0006	2.2656 +.0004	.00015	8	.0156
1	5220-751-2544	2.3125-16N-3	2.2675	1	2.3131	2.2540 + .0006		.0003	10	.020
3	5220-751-2545	2.3125-16N-3	2.2675	2	2.3125 +.0006	2.2946 - .0006	2.2675 +.0004	.00015	8	.0156
1	5220-751-2546	2.3750-12N-2	2.3139	1	2.3756	2.2959 + .0006		.0003	10	.026
3	5220-751-2547	2.3750-12N-2	2.3139	2	2.3750 +.0006	2.3500 - .0006	2.3139 +.0004	.0002	6	.0208
1	5220-751-2548	2.3750-12N-3	2.3160	1	2.3756	2.2980 + .0006		.0003	10	.026
3	5220-751-2549	2.3750-12N-3	2.3160	2	2.3750 +.0006	2.3521 - .0006	2.3160 +.0004	.0002	6	.0208
1	5220-751-2550	2.3750-16N-2	2.3281	1	2.3756	2.3146 + .0006		.0003	10	.020
3	5220-751-2551	2.3750-16N-2	2.3281	2	2.3750 +.0006	2.3552 - .0006	2.3281 +.0004	.00015	8	.0156
1	5220-751-2552	2.3750-16N-3	2.3300	1	2.3756	2.3165 + .0006		.0003	10	.020
3	5220-751-2553	2.3750-16N-3	2.3300	2	2.3750 +.0006	2.3571 - .0006	2.3300 +.0004	.00015	8	.0156
1	5220-751-2554	2.4375-16N-2	2.3905	1	2.4380	2.3770 + .0006		.0003	10	.020
3	5220-751-2555	2.4375-16N-2	2.3905	2	2.4374 +.0006	2.4176 - .0006	2.3905 +.0004	.00015	8	.0156
1	5220-751-2556	2.4375-16N-3	2.3924	1	2.4381	2.3789 + .0006		.0003	10	.020
3	5220-751-2557	2.4375-16N-3	2.3924	2	2.4375 +.0006	2.4195 - .0006	2.3924 +.0004	.00015	8	.0156
1	5220-751-2558	2.5000-4NC-1	2.3108	1	2.4945	2.2567 + .0009		.0004	5	.078
3	5220-751-2559	2.5000-4NC-1	2.3108	2	2.4936 +.0009	2.4190 - .0009	2.3108 +.0005	.0003	4	.0625
1	5220-751-2560	2.5000-4NC-2	2.3236	1	2.5009	2.2695 + .0009		.0004	5	.078
3	5220-751-2561	2.5000-4NC-2	2.3236	2	2.5000 +.0009	2.4319 - .0009	2.3236 +.0005	.0003	4	.0625
1	5220-751-2562	2.5000-4NC-3	2.3279	1	2.5009	2.2738 + .0009		.0004	5	.078
3	5220-751-2563	2.5000-4NC-3	2.3279	2	2.5000 +.0009	2.4362 - .0009	2.3279 +.0005	.0003	4	.0625

* 1. LO (Not Go) Thread Ring Gage 2. Truncated Thread Setting Plug Gage

ORDBA Form 20-1578, (OT) 4 May 61

Downloaded from http://www.everyspec.com

Table II. Tabulation of Design and Identification Data - American National Standard Thread (Continued)

FIG. NO.	MARKING ON GAGE HANDLE				GAGE DIMENSIONS					
	MIL-STD PART NUMBER	THREAD DESIGNATION	LO PD / LO PD	1 / 2	MAJOR DIA / MAJOR DIA FULL PORTION	MINOR DIA / MAJOR DIA TRUNCATED PORTION	PITCH DIA	TOL ON LEAD	HALF ANGLE TOL	ROOT CLEAR
A	B	C	D	*	E	F	G	H	J	K
1	5220-751-2564	2.5000-8N-2	2.4071	1	2.5007	2.3800 + .0007		.0004	5	.039
3	5220-751-2565	2.5000-8N-2	2.4071	2	2.5000 +.0007	2.4612 - .0007	2.4071 +.0005	.00025	5	.0312
1	5220-751-2566	2.5000-8N-3	2.4106	1	2.5007	2.3835 + .0007		.0004	5	.039
3	5220-751-2567	2.5000-8N-3	2.4106	2	2.5000 +.0007	2.4647 - .0007	2.4106 +.0005	.00025	5	.0312
1	5220-751-2568	2.5000-12N-2	2.4388	1	2.5006	2.4208 + .0006		.0003	10	.026
3	5220-751-2569	2.5000-12N-2	2.4388	2	2.5000 +.0006	2.4749 - .0006	2.4388 +.0004	.0002	6	.0208
1	5220-751-2570	2.5000-12N-3	2.4410	1	2.5006	2.4230 + .0006		.0003	10	.026
3	5220-751-2571	2.5000-12N-3	2.4410	2	2.5000 +.0006	2.4771 - .0006	2.4410 +.0004	.0002	6	.0208
1	5220-751-2572	2.5000-16N-2	2.4530	1	2.5005	2.4395 + .0006		.0003	10	.020
3	5220-751-2573	2.5000-16N-2	2.4530	2	2.4999 +.0006	2.4801 - .0006	2.4530 +.0004	.00015	8	.0156
1	5220-751-2574	2.5000-16N-3	2.4549	1	2.5006	2.4414 + .0006		.0003	10	.020
3	5220-751-2575	2.5000-16N-3	2.4549	2	2.5000 +.0006	2.4820 - .0006	2.4549 +.0004	.00015	8	.0156
1	5220-751-2576	2.6250-12N-2	2.5638	1	2.6256	2.5458 + .0006		.0003	10	.026
3	5220-751-2577	2.6250-12N-2	2.5638	2	2.6250 +.0006	2.5999 - .0006	2.5638 +.0004	.0002	6	.0208
1	5220-751-2578	2.6250-12N-3	2.5659	1	2.6256	2.5479 + .0006		.0003	10	.026
3	5220-751-2579	2.6250-12N-3	2.5659	2	2.6250 +.0006	2.6020 - .0006	2.5659 +.0004	.0002	6	.0208
1	5220-751-2580	2.6250-16N-2	2.5779	1	2.6254	2.5644 + .0006		.0003	10	.020
3	5220-751-2581	2.6250-16N-2	2.5779	2	2.6248 +.0006	2.6050 - .0006	2.5779 +.0004	.00015	8	.0156
1	5220-751-2582	2.6250-16N-3	2.5799	1	2.6256	2.5664 + .0006		.0003	10	.020
3	5220-751-2583	2.6250-16N-3	2.5799	2	2.6250 +.0006	2.6070 - .0006	2.5799 +.0004	.00015	8	.0156
1	5220-751-2584	2.7500-4NC-1	2.5608	1	2.7445	2.5067 + .0009		.0004	5	.078
3	5220-751-2585	2.7500-4NC-1	2.5608	2	2.7436 +.0009	2.6690 - .0009	2.5608 +.0005	.0003	4	.0625

* 1. LO (Not Go) Thread Ring Gage 2. Truncated Thread Setting Plug Gage

ORDBA Form 20-1578, (OT) 4 May 61

Downloaded from http://www.everyspec.com

Table II. Tabulation of Design and Identification Data - American National Standard Thread (Continued)

FIG. NO.	MARKING ON GAGE HANDLE				GAGE DIMENSIONS					
	MIL-STD PART NUMBER	THREAD DESIGNATION	LO PD / LO PD	1 / 2	MAJOR DIA / MAJOR DIA FULL PORTION	MINOR DIA / MAJOR DIA TRUNCATED PORTION	PITCH DIA	TOL ON LEAD	HALF ANGLE TOL	ROOT CLEAR
A	B	C	D	*	E	F	G	H	J	K
1	5220-751-2586	2.7500-4NC-2	2.5736	1	2.7509	2.5195 + .0009		.0004	5	.078
3	5220-751-2587	2.7500-4NC-2	2.5736	2	2.7500 +.0009	2.6819 - .0009	2.5736 +.0005	.0003	4	.0625
1	5220-751-2588	2.7500-4NC-3	2.5779	1	2.7509	2.5238 + .0009		.0004	5	.078
3	5220-751-2589	2.7500-4NC-3	2.5779	2	2.7500 +.0009	2.6862 - .0009	2.5779 +.0005	.0003	4	.0625
1	5220-751-2590	2.7500-8N-2	2.6564	1	2.7507	2.6293 + .0007		.0004	5	.039
3	5220-751-2591	2.7500-8N-2	2.6564	2	2.7500 +.0007	2.7105 - .0007	2.6564 +.0005	.00025	5	.0312
1	5220-751-2592	2.7500-8N-3	2.6601	1	2.7507	2.6330 + .0007		.0004	5	.039
3	5220-751-2593	2.7500-8N-3	2.6601	2	2.7500 +.0007	2.7142 - .0007	2.6601 +.0005	.00025	5	.0312
1	5220-751-2594	2.7500-12N-2	2.6887	1	2.7506	2.6707 + .0006		.0003	10	.026
3	5220-751-2595	2.7500-12N-2	2.6887	2	2.7500 +.0006	2.7248 - .0006	2.6887 +.0004	.0002	6	.0208
1	5220-751-2596	2.7500-12N-3	2.6909	1	2.7506	2.6729 + .0006		.0003	10	.026
3	5220-751-2597	2.7500-12N-3	2.6909	2	2.7500 +.0006	2.7270 - .0006	2.6909 +.0004	.0002	6	.0208
1	5220-751-2598	2.7500-16N-2	2.7028	1	2.7503	2.6893 + .0006		.0003	10	.020
3	5220-751-2599	2.7500-16N-2	2.7028	2	2.7497 +.0006	2.7299 - .0006	2.7028 +.0004	.00015	8	.0156
1	5220-751-2600	2.7500-16N-3	2.7048	1	2.7506	2.6913 + .0006		.0003	10	.020
3	5220-751-2601	2.7500-16N-3	2.7048	2	2.7500 +.0006	2.7319 - .0006	2.7048 +.0004	.00015	8	.0156
1	5220-751-2602	2.8750-12N-2	2.8136	1	2.8756	2.7956 + .0006		.0003	10	.026
3	5220-751-2603	2.8750-12N-2	2.8136	2	2.8750 +.0006	2.8497 - .0006	2.8136 +.0004	.0002	6	.0208
1	5220-751-2604	2.8750-12N-3	2.8158	1	2.8756	2.7978 + .0006		.0003	10	.026
3	5220-751-2605	2.8750-12N-3	2.8158	2	2.8750 +.0006	2.8519 - .0006	2.8158 +.0004	.0002	6	.0208
1	5220-751-2606	2.8570-16N-2	2.8278	1	2.8753	2.8143 + .0006		.0003	10	.020
3	5220-751-2607	2.8750-16N-2	2.8278	2	2.8747 +.0006	2.8549 - .0006	2.8278 +.0004	.00015	8	.0156

* 1. LO (Not Go) Thread Ring Gage 2. Truncated Thread Setting Plug Gage

ORDBA Form 20-1578, (OT) 4 May 61

Downloaded from http://www.everyspec.com

Table II. Tabulation of Design and Identification Data - American National Standard Thread (Continued)

FIG. NO.	MARKING ON GAGE HANDLE				GAGE DIMENSIONS					
	MIL-STD PART NUMBER	THREAD DESIGNATION	LO PD / LO PD	1 / 2	MAJOR DIA / MAJOR DIA FULL PORTION	MINOR DIA / MAJOR DIA TRUNCATED PORTION	——— / PITCH DIA	TOL ON LEAD	HALF ANGLE TOL	ROOT CLEAR
A	B	C	D	*	E	F	G	H	J	K
1	5220-751-2608	2.8750-16N-3	2.8298	1	2.8756	2.8163 + .0006		.0003	10	.020
3	5220-751-2609	2.8750-16N-3	2.8298	2	2.8750 +.0006	2.8569 - .0006	2.8298 +.0004	.00015	8	.0156
1	5220-751-2610	3.0000-4NC-1	2.8108	1	2.9945	2.7567 + .0009		.0004	5	.078
3	5220-751-2611	3.0000-4NC-1	2.8108	2	2.9936 +.0009	2.9190 - .0009	2.8108 +.0005	.0003	4	.0625
1	5220-751-2612	3.0000-4NC-2	2.8236	1	3.0009	2.7695 + .0009		.0004	5	.078
3	5220-751-2613	3.0000-4NC-2	2.8236	2	3.0000 +.0009	2.9319 - .0009	2.8236 +.0005	.0003	4	.0625
1	5220-751-2614	3.0000-4NC-3	2.8279	1	3.0009	2.7738 + .0009		.0004	5	.078
3	5220-751-2615	3.0000-4NC-3	2.8279	2	3.0000 +.0009	2.9362 - .0009	2.8279 +.0005	.0003	4	.0625
1	5220-751-2616	3.0000-8N-2	2.9058	1	3.0003	2.8787 + .0007		.0004	5	.039
3	5220-751-2617	3.0000-8N-2	2.9058	2	2.9996 +.0007	2.9599 - .0007	2.9058 +.0005	.00025	5	.0312
1	5220-751-2618	3.0000-8N-3	2.9096	1	3.0007	2.8825 + .0007		.0004	5	.039
3	5220-751-2619	3.0000-8N-3	2.9096	2	3.0000 +.0007	2.9637 - .0007	2.9096 +.0005	.00025	5	.0312
1	5220-751-2620	3.0000-12N-2	2.9385	1	3.0006	2.9205 + .0006		.0003	10	.026
3	5220-751-2621	3.0000-12N-2	2.9385	2	3.0000 +.0006	2.9746 - .0006	2.9385 +.0004	.0002	6	.0208
1	5220-751-2622	3.0000-12N-3	2.9408	1	3.0006	2.9228 + .0006		.0003	10	.026
3	5220-751-2623	3.0000-12N-3	2.9408	2	3.0000 +.0006	2.9769 - .0006	2.9408 +.0004	.0002	6	.0208
1	5220-751-2624	3.0000-16N-2	2.9527	1	3.0002	2.9392 + .0006		.0003	10	.020
3	5220-751-2625	3.0000-16N-2	2.9527	2	2.9996 +.0006	2.9798 - .0006	2.9527 +.0004	.00015	8	.0156
1	5220-751-2626	3.0000-16N-3	2.9547	1	3.0006	2.9412 + .0006		.0003	10	.020
3	5220-751-2627	3.0000-16N-3	2.9547	2	3.0000 +.0006	2.9818 - .0006	2.9547 +.0004	.00015	8	.0156
1	5220-751-2628	3.1250-12N-2	3.0635	1	3.1256	3.0455 + .0006		.0003	10	.026
3	5220-751-2629	3.1250-12N-2	3.0635	2	3.1250 +.0006	3.0996 - .0006	3.0635 +.0004	.0002	6	.0208

* 1. LO (Not Go) Thread Ring Gage 2. Truncated Thread Setting Plug Gage

ORDBA Form 20-1578, (OT) 4 May 61

Downloaded from http://www.everyspec.com

Table II. Tabulation of Design and Identification Data - American National Standard Thread (Continued)

FIG. NO.	MARKING ON GAGE HANDLE				GAGE DIMENSIONS					
	MIL-STD PART NUMBER	THREAD DESIGNATION	LO PD / LO PD	1 / 2	MAJOR DIA / MAJOR DIA FULL PORTION	MINOR DIA / MAJOR DIA TRUNCATED PORTION	PITCH DIA	TOL ON LEAD	HALF ANGLE TOL	ROOT CLEAR
A	B	C	D	*	E	F	G	H	J	K
1	5220-751-2630	3.1250-12N-3	3.0657	1	3.1256	3.0477 + .0006		.0003	10	.026
3	5220-751-2631	3.1250-12N-3	3.0657	2	3.1250 +.0006	3.1018 - .0006	3.0657 +.0004	.0002	6	.0208
1	5220-751-2632	3.1250-16N-2	3.0776	1	3.1251	3.0641 + .0006		.0003	10	.020
3	5220-751-2633	3.1250-16N-2	3.0776	2	3.1245 +.0006	3.1047 - .0006	3.0776 +.0004	.00015	8	.0156
1	5220-751-2634	3.1250-16N-3	3.0797	1	3.1256	3.0662 + .0006		.0003	10	.020
3	5220-751-2635	3.1250-16N-3	3.0797	2	3.1250 +.0006	3.1068 - .0006	3.0797 +.0004	.00015	8	.0156
1	5220-751-2636	3.2500-4NC-1	3.0608	1	3.2445	3.0067 + .0009		.0004	5	.078
3	5220-751-2637	3.2500-4NC-1	3.0608	2	3.2436 +.0009	3.1690 - .0009	3.0608 +.0005	.0003	4	.0625
1	5220-751-2638	3.2500-4NC-2	3.0736	1	3.2509	3.0195 + .0009		.0004	5	.078
3	5220-751-2639	3.2500-4NC-2	3.0736	2	3.2500 +.0009	3.1819 - .0009	3.0736 +.0005	.0003	4	.0625
1	5220-751-2640	3.2500-4NC-3	3.0779	1	3.2509	3.0238 + .0009		.0004	5	.078
3	5220-751-2641	3.2500-4NC-3	3.0779	2	3.2500 +.0009	3.1862 - .0009	3.0779 +.0005	.0003	4	.0625
1	5220-751-2642	3.2500-8N-2	3.1556	1	3.2501	3.1285 + .0007		.0004	5	.039
3	5220-751-2643	3.2500-8N-2	3.1556	2	3.2494 +.0007	3.2097 - .0007	3.1556 +.0005	.00025	5	.0312
1	5220-751-2644	3.2500-8N-3	3.1595	1	3.2507	3.1324 + .0007		.0004	5	.039
3	5220-751-2645	3.2500-8N-3	3.1595	2	3.2500 +.0007	3.2136 - .0007	3.1595 +.0005	.00025	5	.0312
1	5220-751-2646	3.2500-12N-2	3.1884	1	3.2506	3.1704 + .0006		.0003	10	.026
3	5220-751-2647	3.2500-12N-2	3.1884	2	3.2500 +.0006	3.2245 - .0006	3.1884 +.0004	.0002	6	.0208
1	5220-751-2648	3.2500-12N-3	3.1907	1	3.2506	3.1727 + .0006		.0003	10	.026
3	5220-751-2649	3.2500-12N-3	3.1907	2	3.2500 +.0006	3.2268 - .0006	3.1907 +.0004	.0002	6	.0208
1	5220-751-2650	3.2500-16N-2	3.2025	1	3.2500	3.1890 + .0006		.0003	10	.020
3	5220-751-2651	3.2500-16N-2	3.2025	2	3.2494 +.0006	3.2296 - .0006	3.2025 +.0004	.00015	8	.0156

* 1. LO (Not Go) Thread Ring Gage 2. Truncated Thread Setting Plug Gage

ORDBA Form 20-1578, (OT) 4 May 61

Downloaded from http://www.everyspec.com

Table II. Tabulation of Design and Identification Data - American National Standard Thread (Continued)

FIG. NO.	MARKING ON GAGE HANDLE				GAGE DIMENSIONS					
	MIL-STD PART NUMBER	THREAD DESIGNATION	LO PD	1	MAJOR DIA	MINOR DIA	———	TOL ON LEAD	HALF ANGLE TOL	ROOT CLEAR
			LO PD	2	MAJOR DIA FULL PORTION	MAJOR DIA TRUNCATED PORTION	PITCH DIA			
A	B	C	D	*	E	F	G	H	J	K
1	5220-751-2652	3.2500-16N-3	3.2046	1	3.2506	3.1911 + .0006		.0003	10	.020
3	5220-751-2653	3.2500-16N-3	3.2046	2	3.2500 +.0006	3.2317 - .0006	3.2046 +.0004	.00015	8	.0156
1	5220-751-2654	3.3750-12N-2	3.3133	1	3.3756	3.2953 + .0006		.0003	10	.026
3	5220-751-2655	3.3750-12N-2	3.3133	2	3.3750 +.0006	3.3494 - .0006	3.3133 +.0004	.0002	6	.0208
1	5220-751-2656	3.3750-12N-3	3.3156	1	3.3756	3.2976 + .0006		.0003	10	.026
3	5220-751-2657	3.3750-12N-3	3.3156	2	3.3750 +.0006	3.3517 - .0006	3.3156 +.0004	.0002	6	.0208
1	5220-751-2658	3.3750-16N-2	3.3275	1	3.3750	3.3140 + .0006		.0003	10	.020
3	5220-751-2659	3.3750-16N-2	3.3275	2	3.3744 +.0006	3.3546 - .0006	3.3275 +.0004	.00015	8	.0156
1	5220-751-2660	3.3750-16N-3	3.3296	1	3.3756	3.3161 + .0006		.0003	10	.020
3	5220-751-2661	3.3750-16N-3	3.3296	2	3.3750 +.0006	3.3567 - .0006	3.3296 +.0004	.00015	8	.0156
1	5220-751-2662	3.5000-4NC-1	3.3108	1	3.4945	3.2567 + .0009		.0004	5	.078
3	5220-751-2663	3.5000-4NC-1	3.3108	2	3.4936 +.0009	3.4190 - .0009	3.3108 +.0005	.0003	4	.0625
1	5220-751-2664	3.5000-4NC-2	3.3236	1	3.5009	3.2695 + .0009		.0004	5	.078
3	5220-751-2665	3.5000-4NC-2	3.3236	2	3.5000 +.0009	3.4319 - .0009	3.3236 +.0005	.0003	4	.0625
1	5220-751-2666	3.5000-4NC-3	3.3279	1	3.5009	3.2738 + .0009		.0004	5	.078
3	5220-751-2667	3.5000-4NC-3	3.3279	2	3.5000 +.0009	3.4362 - .0009	3.3279 +.0005	.0003	4	.0625
1	5220-751-2668	3.5000-8N-2	3.4055	1	3.5000	3.3784 + .0007		.0004	5	.039
3	5220-751-2669	3.5000-8N-2	3.4055	2	3.4992 +.0007	3.4596 - .0007	3.4055 +.0005	.00025	5	.0312
1	5220-751-2670	3.5000-8N-3	3.4095	1	3.5007	3.3824 + .0007		.0004	5	.039
3	5220-751-2671	3.5000-8N-3	3.4095	2	3.5000 +.0007	3.4636 - .0007	3.4095 +.0005	.00025	5	.0312
1	5220-751-2672	3.5000-12N-2	3.4383	1	3.5006	3.4203 + .0006		.0003	10	.026
3	5220-751-2673	3.5000-12N-2	3.4383	2	3.5000 +.0006	3.4744 - .0006	3.4383 +.0004	.0002	6	.0208

* 1. LO (Not Go) Thread Ring Gage 2. Truncated Thread Setting Plug Gage

ORDBA Form 20-1578, (OT) 4 May 61

Downloaded from http://www.everyspec.com

Table II. Tabulation of Design and Identification Data - American National Standard Thread (Continued)

FIG. NO.	MARKING ON GAGE HANDLE				GAGE DIMENSIONS					
	MIL-STD PART NUMBER	THREAD DESIGNATION	LO PD / LO PD	1 / 2	MAJOR DIA / MAJOR DIA FULL PORTION	MINOR DIA / MAJOR DIA TRUNCATED PORTION	PITCH DIA	TOL ON LEAD	HALF ANGLE TOL	ROOT CLEAR
A	B	C	D	*	E	F	G	H	J	K
1	5220-751-2674	3.5000-12N-3	3.4406	1	3.5006	3.4226 + .0006		.0003	10	.026
3	5220-751-2675	3.5000-12N-3	3.4406	2	3.5000 +.0006	3.4767 - .0006	3.4406 +.0004	.0002	6	.0208
1	5220-751-2676	3.5000-16N-2	3.4524	1	3.5000	3.4389 + .0006		.0003	10	.020
3	5220-751-2677	3.5000-16N-2	3.4524	2	3.4993 +.0006	3.4795 - .0006	3.4524 +.0004	.00015	8	.0156
1	5220-751-2678	3.5000-16N-3	3.4545	1	3.5006	3.4410 + .0006		.0003	10	.020
3	5220-751-2679	3.5000-16N-3	3.4545	2	3.5000 +.0006	3.4816 - .0006	3.4545 +.0004	.00015	8	.0156
1	5220-751-2680	3.6250-12N-2	3.5632	1	3.6256	3.5452 + .0006		.0003	10	.026
3	5220-751-2681	3.6250-12N-2	3.5632	2	3.6250 +.0006	3.5993 - .0006	3.5632 +.0004	.0002	6	.0208
1	5220-751-2682	3.6250-12N-3	3.5655	1	3.6256	3.5475 + .0006		.0003	10	.026
3	5220-751-2683	3.6250-12N-3	3.5655	2	3.6250 +.0006	3.6016 - .0006	3.5655 +.0004	.0002	6	.0208
1	5220-751-2684	3.6250-16N-2	3.5773	1	3.6250	3.5638 + .0006		.0003	10	.020
3	5220-751-2685	3.6250-16N-2	3.5773	2	3.6242 +.0006	3.6044 - .0006	3.5773 +.0004	.00015	8	.0156
1	5220-751-2686	3.6250-16N-3	3.5795	1	3.6256	3.5660 + .0006		.0003	10	.020
3	5220-751-2687	3.6250-16N-3	3.5795	2	3.6250 +.0006	3.6066 - .0006	3.5795 +.0004	.00015	8	.0156
1	5220-751-2688	3.7500-4NC-1	3.5608	1	3.7445	3.5067 + .0009		.0004	5	.078
3	5220-751-2689	3.7500-4NC-1	3.5608	2	3.7436 +.0009	3.6690 - .0009	3.5608 +.0005	.0003	4	.0625
1	5220-751-2690	3.7500-4NC-2	3.5736	1	3.7509	3.5195 + .0009		.0004	5	.078
3	5220-751-2691	3.7500-4NC-2	3.5736	2	3.7500 +.0009	3.6819 - .0009	3.5736 +.0005	.0003	4	.0625
1	5220-751-2692	3.7500-4NC-3	3.5779	1	3.7509	3.5238 + .0009		.0004	5	.078
3	5220-751-2693	3.7500-4NC-3	3.5779	2	3.7500 +.0009	3.6862 - .0009	3.5779 +.0005	.0003	4	.0625
1	5220-751-2694	3.7500-8N-2	3.6554	1	3.7500	3.6283 + .0007		.0004	5	.039
3	5220-751-2695	3.7500-8N-2	3.6554	2	3.7492 +.0007	3.7095 - .0007	3.6554 +.0005	.00025	5	.0312

* 1. LO (Not Go) Thread Ring Gage 2. Truncated Thread Setting Plug Gage

ORDBA Form 20-1578, (OT) 4 May 61

Downloaded from http://www.everyspec.com

Table II. Tabulation of Design and Identification Data - American National Standard Thread (Continued)

FIG. NO.	MARKING ON GAGE HANDLE				GAGE DIMENSIONS					
	MIL-STD PART NUMBER	THREAD DESIGNATION	LO PD / LO PD	1 / 2	MAJOR DIA / MAJOR DIA FULL PORTION	MINOR DIA / MAJOR DIA TRUNCATED PORTION	PITCH DIA	TOL ON LEAD	HALF ANGLE TOL	ROOT CLEAR
A	B	C	D	*	E	F	G	H	J	K
1	5220-751-2696	3.7500-8N-3	3.6594	1	3.7507	3.6323 + .0007		.0004	5	.039
3	5220-751-2697	3.7500-8N-3	3.6594	2	3.7500 +.0007	3.7135 - .0007	3.6594 +.0005	.00025	5	.0312
1	5220-751-2698	3.7500-12N-2	3.6881	1	3.7506	3.6701 + .0006		.0003	10	.026
3	5220-751-2699	3.7500-12N-2	3.6881	2	3.7500 +.0006	3.7242 - .0006	3.6881 +.0004	.0002	6	.0208
1	5220-751-2700	3.7500-12N-3	3.6905	1	3.7506	3.6725 + .0006		.0003	10	.026
3	5220-751-2701	3.7500-12N-3	3.6905	2	3.7500 +.0006	3.7266 - .0006	3.6905 +.0004	.0002	6	.0208
1	5220-751-2702	3.7500-16N-2	3.7023	1	3.7500	3.6888 + .0006		.0003	10	.020
3	5220-751-2703	3.7500-16N-2	3.7023	2	3.7492 +.0006	3.7294 - .0006	3.7023 +.0004	.00015	8	.0156
1	5220-751-2704	3.7500-16N-3	3.7044	1	3.7506	3.6909 + .0006		.0003	10	.020
3	5220-751-2705	3.7500-16N-3	3.7044	2	3.7500 +.0006	3.7315 - .0006	3.7044 +.0004	.00015	8	.0156
1	5220-751-2706	3.8750-12N-2	3.8131	1	3.8756	3.7951 + .0006		.0003	10	.026
3	5220-751-2707	3.8750-12N-2	3.8131	2	3.8750 +.0006	3.8492 - .0006	3.8131 +.0004	.0002	6	.0208
1	5220-751-2708	3.8750-12N-3	3.8154	1	3.8756	3.7974 + .0006		.0003	10	.026
3	5220-751-2709	3.8750-12N-3	3.8154	2	3.8750 +.0006	3.8515 - .0006	3.8154 +.0004	.0002	6	.0208
1	5220-751-2710	3.8750-16N-2	3.8272	1	3.8750	3.8137 + .0006		.0003	10	.020
3	5220-751-2711	3.8750-16N-2	3.8272	2	3.8741 +.0006	3.8543 - .0006	3.8272 +.0004	.00015	8	.0156
1	5220-751-2712	3.8750-16N-3	3.8294	1	3.8756	3.8159 + .0006		.0003	10	.020
3	5220-751-2713	3.8750-16N-3	3.8294	2	3.8750 +.0006	3.8565 - .0006	3.8294 +.0004	.00015	8	.0156
1	5220-751-2714	4.0000-4NC-1	3.8108	1	3.9945	3.7567 + .0009		.0004	5	.078
3	5220-751-2715	4.0000-4NC-1	3.8108	2	3.9936 +.0009	3.9190 - .0009	3.8108 +.0005	.0003	4	.0625
1	5220-751-2716	4.0000-4NC-2	3.8236	1	4.0009	3.7695 + .0009		.0004	5	.078
3	5220-751-2717	4.0000-4NC-2	3.8236	2	4.0000 +.0009	3.9319 - .0009	3.8236 +.0005	.0003	4	.0625

* 1. LO (Not Go) Thread Ring Gage 2. Truncated Thread Setting Plug Gage

ORDBA Form 20-1578, (OT) 4 May 61

Downloaded from http://www.everyspec.com

Table II. Tabulation of Design and Identification Data - American National Standard Thread (Continued)

FIG. NO.	MARKING ON GAGE HANDLE				GAGE DIMENSIONS					
	MIL-STD PART NUMBER	THREAD DESIGNATION	LO PD / LO PD	1 / 2	MAJOR DIA / MAJOR DIA FULL PORTION	MINOR DIA / MAJOR DIA TRUNCATED PORTION	PITCH DIA	TOL ON LEAD	HALF ANGLE TOL	ROOT CLEAR
A	B	C	D	*	E	F	G	H	J	K
1	5220-751-2718	4.0000-4NC-3	3.8279	1	4.0009	3.7738 + .0009		.0004	5	.078
3	5220-751-2719	4.0000-4NC-3	3.8279	2	4.0000 +.0009	3.9362 - .0009	3.8279 +.0005	.0003	4	.0625
1	5220-751-2720	4.0000-8N-2	3.9053	1	4.0000	3.8782 + .0007		.0004	5	.039
3	5220-751-2721	4.0000-8N-2	3.9053	2	3.9990 +.0007	3.9594 - .0007	3.9053 +.0005	.00025	5	.0312
1	5220-751-2722	4.0000-8N-3	3.9093	1	4.0007	3.8822 + .0007		.0004	5	.039
3	5220-751-2723	4.0000-8N-3	3.9093	2	4.0000 +.0007	3.9634 - .0007	3.9093 +.0005	.00025	5	.0312
1	5220-751-2724	4.0000-12N-2	3.9380	1	4.0006	3.9200 + .0006		.0003	10	.026
3	5220-751-2725	4.0000-12N-2	3.9380	2	4.0000 +.0006	3.9741 - .0006	3.9380 +.0004	.0002	6	.0208
1	5220-751-2726	4.0000-12N-3	3.9404	1	4.0006	3.9224 + .0006		.0003	10	.026
3	5220-751-2727	4.0000-12N-3	3.9404	2	4.0000 +.0006	3.9765 - .0006	3.9404 +.0004	.0002	6	.0208
1	5220-751-2728	4.0000-16N-2	3.9522	1	4.0000	3.9387 + .0006		.0003	10	.020
3	5220-751-2729	4.0000-16N-2	3.9522	2	3.9991 +.0006	3.9793 - .0006	3.9522 +.0004	.00015	8	.0156
1	5220-751-2730	4.0000-16N-3	3.9543	1	4.0006	3.9408 + .0006		.0003	10	.020
3	5220-751-2731	4.0000-16N-3	3.9543	2	4.0000 +.0006	3.9814 - .0006	3.9543 +.0004	.00015	8	.0156
1	5220-751-2732	4.2500-8N-2	4.1551	1	4.2500	4.1280 + .0011		.0004	5	.039
3	5220-751-2733	4.2500-8N-2	4.1551	2	4.2488 +.0011	4.2092 - .0011	4.1551 +.0006	.00025	5	.0312
1	5220-751-2734	4.2500-8N-3	4.1592	1	4.2511	4.1321 + .0011		.0004	5	.039
3	5220-751-2735	4.2500-8N-3	4.1592	2	4.2500 +.0011	4.2133 - .0011	4.1592 +.0006	.00025	5	.0312
1	5220-751-2736	4.2500-12N-2	4.1879	1	4.2509	4.1699 + .0009		.0003	10	.026
3	5220-751-2737	4.2500-12N-2	4.1879	2	4.2500 +.0009	4.2240 - .0009	4.1879 +.0006	.0002	6	.0208
1	5220-751-2738	4.2500-12N-3	4.1903	1	4.2509	4.1723 + .0009		.0003	10	.026
3	5220-751-2739	4.2500-12N-3	4.1903	2	4.2500 +.0009	4.2264 - .0009	4.1903 +.0006	.0002	6	.0208

* 1. LO (Not Go) Thread Ring Gage 2. Truncated Thread Setting Plug Gage

ORDBA Form 20-1578, (OT) 4 May 61

Downloaded from http://www.everyspec.com

Table II. Tabulation of Design and Identification Data - American National Standard Thread (Continued)

FIG. NO.	MARKING ON GAGE HANDLE				GAGE DIMENSIONS					
	MIL-STD PART NUMBER	THREAD DESIGNATION	LO PD / LO PD	1 / 2	MAJOR DIA / MAJOR DIA FULL PORTION	MINOR DIA / MAJOR DIA TRUNCATED PORTION	PITCH DIA	TOL ON LEAD	HALF ANGLE TOL	ROOT CLEAR
A	B	C	D	*	E	F	G	H	J	K
1	5220-751-7058	4.2500-16N-2	4.2020	1	4.2500	4.1885 + .0009		.0003	10	.020
3	5220-751-7059	4.2500-16N-2	4.2020	2	4.2489 +.0009	4.2291 - .0009	4.2020 +.0006	.00015	8	.0156
1	5220-751-7060	4.2500-16N-3	4.2042	1	4.2509	4.1907 + .0009		.0003	10	.020
3	5220-751-7061	4.2500-16N-3	4.2042	2	4.2500 +.0009	4.2313 - .0009	4.2042 +.0006	.00015	8	.0156
1	5220-751-2740	4.5000-8N-2	4.4050	1	4.5000	4.3779 + .0011		.0004	5	.039
3	5220-751-2741	4.5000-8N-2	4.4050	2	4.4988 +.0011	4.4591 - .0011	4.4050 +.0006	.00025	5	.0312
1	5220-751-2742	4.5000-8N-3	4.4091	1	4.5011	4.3820 + .0011		.0004	5	.039
3	5220-751-2743	4.5000-8N-3	4.4091	2	4.5000 +.0011	4.4632 - .0011	4.4091 +.0006	.00025	5	.0312
1	5220-751-2744	4.5000-12N-2	4.4378	1	4.5009	4.4198 + .0009		.0003	10	.026
3	5220-751-2745	4.5000-12N-2	4.4378	2	4.5000 +.0009	4.4739 - .0009	4.4378 +.0006	.0002	6	.0208
1	5220-751-2746	4.5000-12N-3	4.4402	1	4.5009	4.4222 + .0009		.0003	10	.026
3	5220-751-2747	4.5000-12N-3	4.4402	2	4.5000 +.0009	4.4763 - .0009	4.4402 +.0006	.0002	6	.0208
1	5220-751-7062	4.5000-16N-2	4.4519	1	4.5000	4.4384 + .0009		.0003	10	.020
3	5220-751-7063	4.5000-16N-2	4.4519	2	4.4988 +.0009	4.4790 - .0009	4.4519 +.0006	.00015	8	.0156
1	5220-751-7064	4.5000-16N-3	4.4541	1	4.5009	4.4406 + .0009		.0003	10	.020
3	5220-751-7065	4.5000-16N-3	4.4541	2	4.5000 +.0009	4.4812 - .0009	4.4541 +.0006	.00015	8	.0156
1	5220-751-2748	4.7500-8N-2	4.6549	1	4.7500	4.6278 + .0011		.0004	5	.039
3	5220-751-2749	4.7500-8N-2	4.6549	2	4.7486 +.0011	4.7090 - .0011	4.6549 +.0006	.00025	5	.0312
1	5220-751-2750	4.7500-8N-3	4.6590	1	4.7511	4.6319 + .0011		.0004	5	.039
3	5220-751-2751	4.7500-8N-3	4.6590	2	4.7500 +.0011	4.7131 - .0011	4.6590 +.0006	.00025	5	.0312
1	5220-751-2752	4.7500-12N-2	4.6876	1	4.7509	4.6696 + .0009		.0003	10	.026
3	5220-751-2753	4.7500-12N-2	4.6876	2	4.7500 +.0009	4.7237 - .0009	4.6876 +.0006	.0002	6	.0208

* 1. LO (Not Go) Thread Ring Gage 2. Truncated Thread Setting Plug Gage

ORDBA Form 20-1578, (OT) 4 May 61

Downloaded from http://www.everyspec.com

Table II. Tabulation of Design and Identification Data - American National Standard Thread (Continued)

FIG. NO.	MARKING ON GAGE HANDLE				GAGE DIMENSIONS					
	MIL-STD PART NUMBER	THREAD DESIGNATION	LO PD / LO PD	1 / 2	MAJOR DIA / MAJOR DIA FULL PORTION	MINOR DIA / MAJOR DIA TRUNCATED PORTION	PITCH DIA	TOL ON LEAD	HALF ANGLE TOL	ROOT CLEAR
A	B	C	D	*	E	F	G	H	J	K
1	5220-751-2754	4.7500-12N-3	4.6901	1	4.7509	4.6721 + .0009		.0003	10	.026
3	5220-751-2755	4.7500-12N-3	4.6901	2	4.7500 +.0009	4.7262 - .0009	4.6901 +.0006	.0002	6	.0208
1	5220-751-7066	4.7500-16N-2	4.7018	1	4.7500	4.6883 + .0009		.0003	10	.020
3	5220-751-7067	4.7500-16N-2	4.7018	2	4.7487 +.0009	4.7289 - .0009	4.7018 +.0006	.00015	8	.0156
1	5220-751-7068	4.7500-16N-3	4.7041	1	4.7509	4.6906 + .0009		.0003	10	.020
3	5220-751-7069	4.7500-16N-3	4.7041	2	4.7500 +.0009	4.7312 - .0009	4.7041 +.0006	.00015	8	.0156
1	5220-751-2756	5.0000-8N-2	4.9048	1	5.0000	4.8777 + .0011		.0004	5	.039
3	5220-751-2757	5.0000-8N-2	4.9048	2	4.9986 +.0011	4.9589 - .0011	4.9048 +.0006	.00025	5	.0312
1	5220-751-2758	5.0000-8N-3	4.9089	1	5.0011	4.8818 + .0011		.0004	5	.039
3	5220-751-2759	5.0000-8N-3	4.9089	2	5.0000 +.0011	4.9630 - .0011	4.9089 +.0006	.00025	5	.0312
1	5220-751-2760	5.0000-12N-2	4.9375	1	5.0009	4.9195 + .0009		.0003	10	.026
3	5220-751-2761	5.0000-12N-2	4.9375	2	5.0000 +.0009	4.9736 - .0009	4.9375 +.0006	.0002	6	.0208
1	5220-751-2762	5.0000-12N-3	4.9400	1	5.0009	4.9220 + .0009		.0003	10	.026
3	5220-751-2763	5.0000-12N-3	4.9400	2	5.0000 +.0009	4.9761 - .0009	4.9400 +.0006	.0002	6	.0208
1	5220-751-7070	5.0000-16N-2	4.9517	1	5.0000	4.9382 + .0009		.0003	10	.020
3	5220-751-7071	5.0000-16N-2	4.9517	2	4.9986 +.0009	4.9788 - .0009	4.9517 +.0006	.00015	8	.0156
1	5220-751-7072	5.0000-16N-3	4.9540	1	5.0009	4.9405 + .0009		.0003	10	.020
3	5220-751-7073	5.0000-16N-3	4.9540	2	5.0000 +.0009	4.9811 - .0009	4.9540 +.0006	.00015	8	.0156
1	5220-751-2764	5.2500-8N-2	5.1547	1	5.2500	5.1276 + .0011		.0004	5	.039
3	5220-751-2765	5.2500-8N-2	5.1547	2	5.2484 +.0011	5.2088 - .0011	5.1547 +.0006	.00025	5	.0312
1	5220-751-2766	5.2500-8N-3	5.1589	1	5.2511	5.1318 + .0011		.0004	5	.039
3	5220-751-2767	5.2500-8N-3	5.1589	2	5.2500 +.0011	5.2130 - .0011	5.1589 +.0006	.00025	5	.0312

* 1. LO (Not Go) Thread Ring Gage 2. Truncated Thread Setting Plug Gage

ORDBA Form 20-1378, (OT) 4 May 61

Downloaded from http://www.everyspec.com

Table II. Tabulation of Design and Identification Data - American National Standard Thread (Continued)

FIG. NO.	MARKING ON GAGE HANDLE				GAGE DIMENSIONS					
	MIL-STD PART NUMBER	THREAD DESIGNATION	LO PD / LO PD	1 / 2	MAJOR DIA / MAJOR DIA FULL PORTION	MINOR DIA / MAJOR DIA TRUNCATED PORTION	PITCH DIA	TOL ON LEAD	HALF ANGLE TOL	ROOT CLEAR
A	B	C	D	*	E	F	G	H	J	K
1	5220-751-2768	5.2500-12N-2	5.1874	1	5.2508	5.1694 + .0009		.0003	10	.026
3	5220-751-2769	5.2500-12N-2	5.1874	2	5.2499 +.0009	5.2235 - .0009	4.1874 +.0006	.0002	6	.0208
1	5220-751-2770	5.2500-12N-3	5.1900	1	5.2509	5.1720 + .0009		.0003	10	.026
3	5220-751-2771	5.2500-12N-3	5.1900	2	5.2500 +.0009	5.2261 - .0009	5.1900 +.0006	.0002	6	.0208
1	5220-751-7074	5.2500-16N-2	5.2016	1	5.2500	5.1881 + .0009		.0003	10	.020
3	5220-751-7075	5.2500-16N-2	5.2016	2	5.2485 +.0009	5.2287 - .0009	5.2016 +.0006	.00015	8	.0156
1	5220-751-7076	5.2500-16N-3	5.2039	1	5.2509	5.1904 + .0009		.0003	10	.020
3	5220-751-7077	5.2500-16N-3	5.2039	2	5.2500 +.0009	5.2310 - .0009	5.2039 +.0006	.00015	8	.0156
1	5220-751-2772	5.5000-8N-2	5.4046	1	5.5000	5.3775 + .0011		.0004	5	.039
3	5220-751-2773	5.5000-8N-2	5.4046	2	5.4984 +.0011	5.4587 - .0011	5.4046 +.0006	.00025	5	.0312
1	5220-751-2774	5.5000-8N-3	5.4088	1	5.5011	5.3817 + .0011		.0004	5	.039
3	5220-751-2775	5.5000-8N-3	5.4088	2	5.5000 +.0011	5.4629 - .0011	5.4088 +.0006	.00025	5	.0312
1	5220-751-2776	5.5000-12N-2	5.4373	1	5.5007	5.4193 + .0009		.0003	10	.026
3	5220-751-2777	5.5000-12N-2	5.4373	2	5.4998 +.0009	5.4734 - .0009	5.4373 +.0006	.0002	6	.0208
1	5220-751-2778	5.5000-12N-3	5.4399	1	5.5009	5.4219 + .0009		.0003	10	.026
3	5220-751-2779	5.5000-12N-3	5.4399	2	5.5000 +.0009	5.4760 - .0009	5.4399 +.0006	.0002	6	.0208
1	5220-751-7078	5.5000-16N-2	5.4515	1	5.5000	5.4380 + .0009		.0003	10	.020
3	5220-751-7079	5.5000-16N-2	5.4515	2	5.4984 +.0009	5.4786 - .0009	5.4515 +.0006	.00015	8	.0156
1	5220-751-7080	5.5000-16N-3	5.4538	1	5.5009	5.4403 + .0009		.0003	10	.020
3	5220-751-7081	5.5000-16N-3	5.4538	2	5.5000 +.0009	5.4809 - .0009	5.4538 +.0006	.00015	8	.0156
1	5220-751-2780	5.7500-8N-2	5.6545	1	5.7500	5.6274 + .0011		.0004	5	.039
3	5220-751-2781	5.7500-8N-2	5.6545	2	5.7482 +.0011	5.7086 - .0011	5.6545 +.0006	.00025	5	.0312

* 1. LO (Not Go) Thread Ring Gage 2. Truncated Thread Setting Plug Gage

ORDBA Form 20-1578, (OT) 4 May 61

Downloaded from http://www.everyspec.com

Table II. Tabulation of Design and Identification Data - American National Standard Thread (Continued)

FIG. NO.	MARKING ON GAGE HANDLE				GAGE DIMENSIONS					
	MIL-STD PART NUMBER	THREAD DESIGNATION	LO PD / LO PD	1 / 2	MAJOR DIA / MAJOR DIA FULL PORTION	MINOR DIA / MAJOR DIA TRUNCATED PORTION	PITCH DIA	TOL ON LEAD	HALF ANGLE TOL	ROOT CLEAR
A	B	C	D	*	E	F	G	H	J	K
1	5220-751-2782	5.7500-8N-3	5.6587	1	5.7511	5.6316 + .0011		.0004	5	.039
3	5220-751-2783	5.7500-8N-3	5.6587	2	5.7500 +.0011	5.7128 - .0011	5.6587 +.0006	.00025	5	.0312
1	5220-751-2784	5.7500-12N-2	5.6872	1	5.7506	5.6692 + .0009		.0003	10	.026
3	5220-751-2785	5.7500-12N-2	5.6872	2	5.7497 +.0009	5.7233 - .0009	5.6872 +.0006	.0002	6	.0208
1	5220-751-2786	5.7500-12N-3	5.6898	1	5.7509	5.6718 + .0009		.0003	10	.026
3	5220-751-2787	5.7500-12N-3	5.6898	2	5.7500 +.0009	5.7259 - .0009	5.6898 +.0006	.0002	6	.0208
1	5220-751-7082	5.7500-16N-2	5.7014	1	5.7500	5.6879 + .0009		.0003	10	.020
3	5220-751-7083	5.7500-16N-2	5.7014	2	5.7483 +.0009	5.7285 - .0009	5.7014 +.0006	.00015	8	.0156
1	5220-751-7084	5.7500-16N-3	5.7038	1	5.7509	5.6903 + .0009		.0003	10	.020
3	5220-751-7085	5.7500-16N-3	5.7038	2	5.7500 +.0009	5.7309 - .0009	5.7038 +.0006	.00015	8	.0156
1	5220-751-2788	6.0000-8N-2	5.9044	1	6.0000	5.8773 + .0011		.0004	5	.039
3	5220-751-2789	6.0000-8N-2	5.9044	2	5.9982 +.0011	5.9585 - .0011	5.9044 +.0006	.00025	5	.0312
1	5220-751-2790	6.0000-8N-3	5.9086	1	6.0011	5.8815 + .0011		.0004	5	.039
3	5220-751-2791	6.0000-8N-3	5.9086	2	6.0000 +.0011	5.9627 - .0011	5.9086 +.0006	.00025	5	.0312
1	5220-751-2792	6.0000-12N-2	5.9371	1	6.0005	5.9191 + .0009		.0003	10	.026
3	5220-751-2793	6.0000-12N-2	5.9371	2	5.9996 +.0009	5.9732 - .0009	5.9371 +.0006	.0002	6	.0208
1	5220-751-2794	6.0000-12N-3	5.9397	1	6.0009	5.9217 + .0009		.0003	10	.026
3	5220-751-2795	6.0000-12N-3	5.9397	2	6.0000 +.0009	5.9758 - .0009	5.9397 +.0006	.0002	6	.0208
1	5220-751-7086	6.0000-16N-2	5.9513	1	6.0000	5.9378 + .0009		.0003	10	.020
3	5220-751-7087	6.0000-16N-2	5.9513	2	5.9982 +.0009	5.9784 - .0009	5.9513 +.0006	.00015	8	.0156
1	5220-751-7088	6.0000-16N-3	5.9537	1	6.0009	5.9402 + .0009		.0003	10	.020
3	5220-751-7089	6.0000-16N-3	5.9537	2	6.0000 +.0009	5.9808 - .0009	5.9537 +.0006	.00015	8	.0156

* 1. LO (Not Go) Thread Ring Gage 2. Truncated Thread Setting Plug Gage

ORDBA Form 20-1578, (OT) 4 May 61

Downloaded from http://www.everyspec.com

Downloaded from http://www.everyspec.com

BLANK

Table III. Tabulation of Design and Identification Data - Special (UNS) Threads

FIG. NO.	MARKING ON GAGE HANDLE				GAGE DIMENSIONS					
	MIL-STD PART NUMBER	THREAD DESIGNATION	LO PD	1	MAJOR DIA	MINOR DIA	———	TOL ON LEAD	HALF ANGLE TOL	ROOT CLEAR
			LO PD	2	MAJOR DIA FULL PORTION	MAJOR DIA TRUNCATED PORTION	PITCH DIA			
A	B	C	D	*	E	F	G	H	J	K
1	5220-751-6974	.5000-12UNS-2A	.4389	1	.4990	.4209 + .0006		.0003	10	.026
2	5220-751-6975	.5000-12UNS-2A	.4389	2	.4984 + .0006	.4750 - .0006	.4389 + .0003	.0002	6	.0208
		(.5000-12UN-2A)**								
		(.5000-12UN-2A)**								
1	5220-751-2118	.5000-12UNS-3A	.4419	1	.5006	.4239 + .0006		.0003	10	.026
2	5220-751-2119	.5000-12UNS-3A	.4419	2	.5000 + .0006	.4780 - .0006	.4419 + .0003	.0002	6	.0208
		(.5000-12UN-3A,N-3)**								
		(.5000-12UN-3A,N-3)**								
1	5220-751-5734	1.0000-14UNS-1A	.9435	1	.9983	.9280 + .0006		.0003	10	.022
2	5220-751-5735	1.0000-14UNS-1A	.9435	2	.9971 + .0006	.9744 - .0006	.9435 + .0003	.0002	6	.0179
		(1.0000-14NF-1A)**								
		(1.0000-14NF-1A)**								
1	5220-751-5736	1.0000-14UNS-2A	.9463	1	.9989	.9308 - .0006		.0003	10	.022
2	5220-751-5737	1.0000-14UNS-2A	.9463	2	.9983 + .0006	.9772 - .0006	.9463 + .0003	.0002	6	.0179
		(1.0000-14NF-2A)**								
		(1.0000-14NF-2A)**								
1	5220-751-5738	1.0000-14UNS-3A	.9494	1	1.0006	.9339 + .0006		.0003	10	.022
2	5220-751-5739	1.0000-14UNS-3A	.9494	2	1.0000 + .0006	.9803 - .0006	.9494 + .0003	.0002	6	.0179
		(1.0000-14NF-3A)**								
		(1.0000-14NF-3A)**								
1	5220-751-2258	1.0000-14NS-1	.9445	1	.9985	.9290 + .0006		.0003	10	.022
2	5220-751-2259	1.0000-14NS-1	.9445	2	.9979 + .0006	.9754 - .0006	.9445 + .0003	.0002	6	.0179
		(1.0000-14NF-1)**								
		(1.0000-14NF-1)**								
1	5220-751-2260	1.0000-14NS-2	.9487	1	1.0006	.9332 + .0006		.0003	10	.022
2	5220-751-2261	1.0000-14NS-2	.9487	2	1.0000 + .0006	.9796 - .0006	.9487 + .0003	.0002	6	.0179
		(1.0000-14NF-2)**								
		(1.0000-14NF-2)**								
1	5220-751-2262	1.0000-14NS-3	.9500	1	1.0006	.9345 + .0006		.0003	10	.022
2	5220-751-2263	1.0000-14NS-3	.9500	2	1.0000 + .0006	.9809 - .0006	.9500 + .0003	.0002	6	.0179
		(1.0000-14NF-3)**								
		(1.0000-14NF-3)**								

* 1. LO (Not Go) Thread Ring Gage 2. Truncated Thread Setting Plug Gage

** Thread designation as previously listed.

Downloaded from http://www.everyspec.com

Table III. Tabulation of Design and Identification Data - Special (UNS) Threads (Continued)

FIG. NO.	MARKING ON GAGE HANDLE				GAGE DIMENSIONS					
	MIL-STD PART NUMBER	THREAD DESIGNATION	LO PD	1	MAJOR DIA	MINOR DIA	———	TOL ON LEAD	HALF ANGLE TOL	ROOT CLEAR
			LO PD	2	MAJOR DIA FULL PORTION	MAJOR DIA TRUNCATED PORTION	PITCH DIA			
A	B	C	D	*	E	F	G	H	J	K
1	5220-751-5932	2.0625-16UNS-2A	2.0149	1	2.0615	2.0014 + .0006		.0003	10	.020
3	5220-751-5933	2.0625-16UNS-2A	2.0149	2	2.0609 + .0006	2.0420 - .0006	2.0149 + .0004	.00015	8	.0156
		(2.0625-16UN-2A)**								
		(2.0625-16UN-2A)**								
1	5220-751-5934	2.0625-16UNS-3A	2.0179	1	2.0631	2.0044 + .0006		.0003	10	.020
3	5220-751-5935	2.0625-16UNS-3A	2.0179	2	2.0625 + .0006	2.0450 - .0006	2.0179 + .0004	.00015	8	.0156
		(2.0625-16UN-3A)**								
		(2.0625-16UN-3A)**								
1	5220-751-5948	2.1875-16UNS-2A	2.1399	1	2.1865	2.1264 + .0006		.0003	10	.020
3	5220-751-5949	2.1875-16UNS-2A	2.1399	2	2.1859 + .0006	2.1670 - .0006	2.1399 + .0004	.00015	8	.0156
		(2.1875-16UN-2A)**								
		(2.1875-16UN-2A)**								
1	5220-751-5950	2.1875-16UNS-3A	2.1429	1	2.1881	2.1294 + .0006		.0003	10	.020
3	5220-751-5951	2.1875-16UNS-3A	2.1429	2	2.1875 + .0006	2.1700 - .0006	2.1429 + .0004	.00015	8	.0156
		(2.1875-16UN-3A)**								
		(2.1875-16UN-3A)**								
1	5220-751-5970	2.3125-16UNS-2A	2.2647	1	2.3114	2.2512 + .0006		.0003	10	.020
3	5220-751-5971	2.3125-16UNS-2A	2.2647	2	2.3108 + .0006	2.2918 - .0006	2.2647 + .0004	.00015	8	.0156
		(2.3125-16UN-2A)**								
		(2.3125-16UN-2A)**								
1	5220-751-5972	2.3125-16UNS-3A	2.2678	1	2.3131	2.2543 + .0006		.0003	10	.020
3	5220-751-5973	2.3125-16UNS-3A	2.2678	2	2.3125 + .0006	2.2949 - .0006	2.2678 + .0004	.00015	8	.0156
		(2.3125-16UN-3A)**								
		(2.3125-16UN-3A)**								
1	5220-751-5982	2.4375-16UNS-2A	2.3897	1	2.4364	2.3762 + .0006		.0003	10	.020
3	5220-751-5983	2.4375-16UNS-2A	2.3897	2	2.4358 + .0006	2.4168 - .0006	2.3897 + .0004	.00015	8	.0156
		(2.4375-16UN-2A)**								
		(2.4375-16UN-2A)**								
1	5220-751-5984	2.4375-16UNS-3A	2.3928	1	2.4381	2.3793 + .0006		.0003	10	.020
3	5220-751-5985	2.4375-16UNS-3A	2.3928	2	2.4375 + .0006	2.4199 - .0006	2.3928 + .0004	.00015	8	.0156
		(2.4375-16UN-3A)**								
		(2.4375-16UN-3A)**								

* 1. LO (Not Go) Thread Ring Gage 2. Truncated Thread Setting Plug Gage

** Thread designation as previously listed

Downloaded from http://www.everyspec.com

Table III. Tabulation of Design and Identification Data - Special (UNS) Threads (Continued)

FIG. NO	MARKING ON GAGE HANDLE				GAGE DIMENSIONS					
	MIL-STD PART NUMBER	THREAD DESIGNATION	LO PD	1	MAJOR DIA	MINOR DIA	———	TOL ON LEAD	HALF ANGLE TOL	ROOT CLEAR
			LO PD	2	MAJOR DIA FULL PORTION	MAJOR DIA TRUNCATED PORTION	PITCH DIA			
A	B	C	D	*	E	F	G	H	J	K
1	5220-751-6160	4.2500-8UN-2A	4.1567	1	4.2483	4.1296 + .0011		.0004	5	.039
3	5220-751-6161	4.2500-8UN-2A	4.1567	2	4.2472 + .0011	4.2108 - .0011	4.1567 + .0006	.00025	5	.0312
1	5220-751-6162	4.2500-8UN-3A	4.1618	1	4.2511	4.1347 + .0011		.0004	5	.039
3	5220-751-6163	4.2500-8UN-3A	4.1618	2	4.2500 + .0011	4.2159 - .0011	4.1618 + .0006	.00025	5	.0312
1	5220-751-6172	4.5000-8UN-2A	4.4066	1	4.4983	4.3795 + .0011		.0004	5	.039
3	5220-751-6173	4.5000-8UN-2A	4.4066	2	4.4972 + .0011	4.4607 - .0011	4.4066 + .0006	.00025	5	.0312
1	5220-751-6174	4.5000-8UN-3A	4.4117	1	4.5011	4.3846 + .0011		.0004	5	.039
3	5220-751-6175	4.5000-8UN-3A	4.4117	2	4.5000 + .0011	4.4658 - .0011	4.4117 + .0006	.00025	5	.0312
1	5220-751-6184	4.7500-8UN-2A	4.6564	1	4.7482	4.6293 + .0011		.0004	5	.039
3	5220-751-6185	4.7500-8UN-2A	4.6564	2	4.7471 + .0011	4.7105 - .0011	4.6564 + .0006	.00025	5	.0312
1	5220-751-6186	4.7500-8UN-3A	4.6616	1	4.7511	4.6345 + .0011		.0004	5	.039
3	5220-751-6187	4.7500-8UN-3A	4.6616	2	4.7500 + .0011	4.7157 - .0011	4.6616 + .0006	.00025	5	.0312
1	5220-751-6196	5.0000-8UN-2A	4.9062	1	4.9982	4.8791 + .0011		.0004	5	.039
3	5220-751-6197	5.0000-8UN-2A	4.9062	2	4.9971 + .0011	4.9603 - .0011	4.9062 + .0006	.00025	5	.0312
1	5220-751-6198	5.0000-8UN-3A	4.9116	1	5.0011	4.8845 + .0011		.0004	5	.039
3	5220-751-6199	5.0000-8UN-3A	4.9116	2	5.0000 + .0011	4.9657 - .0011	4.9116 + .0006	.00025	5	.0312
1	5220-751-6208	5.2500-8UN-2A	5.1561	1	5.2482	5.1290 + .0011		.0004	5	.039
3	5220-751-6209	5.2500-8UN-2A	5.1561	2	5.2471 + .0011	5.2102 - .0011	5.1561 + .0006	.00025	5	.0312
1	5220-751-6210	5.2500-8UN-3A	5.1615	1	5.2511	5.1344 + .0011		.0004	5	.039
3	5220-751-6211	5.2500-8UN-3A	5.1615	2	5.2500 + .0011	5.2156 - .0011	5.1615 + .0006	.00025	5	.0312
1	5220-751-6220	5.5000-8UN-2A	5.4059	1	5.4981	5.3788 + .0011		.0004	5	.039
3	5220-751-6221	5.5000-8UN-2A	5.4059	2	5.4970 + .0011	5.4600 - .0011	5.4059 + .0006	.00025	5	.0312

* 1. LO (Not Go) Thread Ring Gage 2. Truncated Thread Setting Plug Gage

Note: The length of engagement for 8UN thread series is equal to the nominal diameter.

Downloaded from http://www.everyspec.com

Table III. Tabulation of Design and Identification Data - Special (UNS) Threads (Continued)

FIG. NO.	MARKING ON GAGE HANDLE				GAGE DIMENSIONS					
	MIL-STD PART NUMBER	THREAD DESIGNATION	LO PD	1	MAJOR DIA	MINOR DIA	PITCH DIA	TOL ON LEAD	HALF ANGLE TOL	ROOT CLEAR
			LO PD	2	MAJOR DIA FULL PORTION	MAJOR DIA TRUNCATED PORTION				
A	B	C	D	*	E	F	G	H	J	K
1	5220-751-6222	5.5000-8UN-3A	5.4114	1	5.5011	5.3843 + .0011		.0004	5	.039
3	5220-751-6223	5.5000-8UN-3A	5.4114	2	5.5000 + .0011	5.4655 - .0011	5.4114 + .0006	.00025	5	.0312
1	5220-751-6232	5.7500-8UN-2A	5.6558	1	5.7481	5.6287 + .0011		.0004	5	.039
3	5220-751-6233	5.7500-8UN-2A	5.6558	2	5.7470 + .0011	5.7099 - .0011	5.6558 + .0006	.00025	5	.0312
1	5220-751-6234	5.7500-8UN-3A	5.6613	1	5.7511	5.6342 + .0011		.0004	5	.039
3	5220-751-6235	5.7500-8UN-3A	5.6613	2	5.7500 + .0011	5.7154 - .0011	5.6613 + .0006	.00025	5	.0312
1	5220-751-6244	6.0000-8UN-2A	5.9056	1	5.9981	5.8785 + .0011		.0004	5	.039
3	5220-751-6245	6.0000-8UN-2A	5.9056	2	5.9970 + .0011	5.9597 - .0011	5.9056 + .0006	.00025	5	.0312
1	5220-751-6246	6.0000-8UN-3A	5.9112	1	6.0011	5.8841 + .0011		.0004	5	.039
3	5220-751-6247	6.0000-8UN-3A	5.9112	2	6.0000 + .0011	5.9653 - .0011	5.9112 + .0006	.00025	5	.0312

Note: The length of engagement for 8UN thread series is equal to the nominal diameter.

* 1. LO (Not Go) Thread Ring Gage 2. Truncated Thread Setting Plug Gage

Downloaded from http://www.everyspec.com

Table IV. Listing of Mil-Std Part Numbers in Numerical Sequence

MIL-STD PART NUMBER	PAGE NO.*	MIL-STD PART NUMBER	PAGE NO.*	MIL-STD PART NUMBER	PAGE NO.*	MIL-STD PART NUMBER	PAGE NO.*	MIL-STD PART NUMBER	PAGE NO.*
A	B	A	B	A	B	A	B	A	B
5220-751-1770	81	5220-751-1798	82	5220-751-1824	83	5220-751-1850	84	5220-751-1874	85
5220-751-1771	81	5220-751-1799	82	5220-751-1825	83	5220-751-1851	84	5220-751-1875	85
5220-751-1772	13,81	5220-751-1800	82	5220-751-1826	83	5220-751-1852	84	5220-751-1876	85
5220-751-1773	13,81	5220-751-1801	82	5220-751-1827	83	5220-751-1853	84	5220-751-1877	85
5220-751-1774	81	5220-751-1802	82	5220-751-1828	83	5220-751-1854	84	5220-751-1878	85
5220-751-1775	81	5220-751-1803	82	5220-751-1829	83	5220-751-1855	84	5220-751-1879	85
5220-751-1776	81	5220-751-1804	82	5220-751-1830	83	5220-751-1856	84	5220-751-1880	85
5220-751-1777	81	5220-751-1805	82	5220-751-1831	83	5220-751-1857	84	5220-751-1881	85
5220-751-1780	13,81	5220-751-1806	82	5220-751-1834	83	5220-751-1858	84	5220-751-1882	85
5220-751-1781	13,81	5220-751-1807	82	5220-751-1835	83	5220-751-1859	84	5220-751-1883	85
5220-751-1782	81	5220-751-1810	82	5220-751-1836	83	5220-751-1860	84	5220-751-1884	85
5220-751-1783	81	5220-751-1811	82	5220-751-1837	83	5220-751-1861	84	5220-751-1885	85
5220-751-1786	81	5220-751-1812	82	5220-751-1838	83	5220-751-1862	84	5220-751-1886	85
5220-751-1787	81	5220-751-1813	82	5220-751-1839	83	5220-751-1863	84	5220-751-1887	85
5220-751-1788	81	5220-751-1814	82	5220-751-1840	83	5220-751-1864	84	5220-751-1888	85
5220-751-1789	81	5220-751-1815	82	5220-751-1841	83	5220-751-1865	84	5220-751-1889	85
5220-751-1790	81	5220-751-1816	82	5220-751-1842	84	5220-751-1866	85	5220-751-1890	86
5220-751-1791	81	5220-751-1817	82	5220-751-1843	84	5220-751-1867	85	5220-751-1891	86
5220-751-1792	81	5220-751-1818	83	5220-751-1844	84	5220-751-1868	85	5220-751-1892	86
5220-751-1793	81	5220-751-1819	83	5220-751-1845	84	5220-751-1869	85	5220-751-1893	86
5220-751-1794	82	5220-751-1820	83	5220-751-1846	84	5220-751-1870	85	5220-751-1894	86
5220-751-1795	82	5220-751-1821	83	5220-751-1847	84	5220-751-1871	85	5220-751-1895	86
5220-751-1796	13,82	5220-751-1822	83	5220-751-1848	84	5220-751-1872	85	5220-751-1896	86
5220-751-1797	13,82	5220-751-1823	83	5220-751-1849	84	5220-751-1873	85	5220-751-1897	86

* Applicable page number in table I, II, or III for design and identification data

Downloaded from http://www.everyspec.com

ORDBA Form 20-1415
(OT) Rev 15 Mar 61

Table IV. Listing of Mil-Std Part Numbers in Numerical Sequence (Continued)

MIL-STD PART NUMBER	PAGE NO.*	MIL-STD PART NUMBER	PAGE NO.*	MIL-STD PART NUMBER	PAGE NO.*	MIL-STD PART NUMBER	PAGE NO.*	MIL-STD PART NUMBER	PAGE NO.*
A	B	A	B	A	B	A	B	A	B
5220-751-1898	86	5220-751-1922	87	5220-751-1946	88	5220-751-1970	89	5220-751-1994	90
5220-751-1899	86	5220-751-1923	87	5220-751-1947	88	5220-751-1971	89	5220-751-1995	90
5220-751-1900	86	5220-751-1924	87	5220-751-1948	88	5220-751-1972	89	5220-751-1996	90
5220-751-1901	86	5220-751-1925	87	5220-751-1949	88	5220-751-1973	89	5220-751-1997	90
5220-751-1902	86	5220-751-1926	87	5220-751-1950	88	5220-751-1974	89	5220-751-1998	90
5220-751-1903	86	5220-751-1927	87	5220-751-1951	88	5220-751-1975	89	5220-751-1999	90
5220-751-1904	86	5220-751-1928	87	5220-751-1952	88	5220-751-1976	89	5220-751-2000	90
5220-751-1905	86	5220-751-1929	87	5220-751-1953	88	5220-751-1977	89	5220-751-2001	90
5220-751-1906	86	5220-751-1930	87	5220-751-1954	88	5220-751-1978	89	5220-751-2002	91
5220-751-1907	86	5220-751-1931	87	5220-751-1955	88	5220-751-1979	89	5220-751-2003	91
5220-751-1908	86	5220-751-1932	87	5220-751-1956	88	5220-751-1980	89	5220-751-2004	91
5220-751-1909	86	5220-751-1933	87	5220-751-1957	88	5220-751-1981	89	5220-751-2005	91
5220-751-1910	86	5220-751-1934	87	5220-751-1958	88	5220-751-1982	89	5220-751-2006	91
5220-751-1911	86	5220-751-1935	87	5220-751-1959	88	5220-751-1983	89	5220-751-2007	91
5220-751-1912	86	5220-751-1936	87	5220-751-1960	88	5220-751-1984	89	5220-751-2008	91
5220-751-1913	86	5220-751-1937	87	5220-751-1961	88	5220-751-1985	89	5220-751-2009	91
5220-751-1914	87	5220-751-1938	88	5220-751-1962	89	5220-751-1986	90	5220-751-2010	91
5220-751-1915	87	5220-751-1939	88	5220-751-1963	89	5220-751-1987	90	5220-751-2011	91
5220-751-1916	87	5220-751-1940	88	5220-751-1964	89	5220-751-1988	90	5220-751-2012	91
5220-751-1917	87	5220-751-1941	88	5220-751-1965	89	5220-751-1989	90	5220-751-2013	91
5220-751-1918	87	5220-751-1942	88	5220-751-1966	89	5220-751-1990	90	5220-751-2014	91
5220-751-1919	87	5220-751-1943	88	5220-751-1967	89	5220-751-1991	90	5220-751-2015	91
5220-751-1920	87	5220-751-1944	88	5220-751-1968	89	5220-751-1992	90	5220-751-2016	91
5220-751-1921	87	5220-751-1945	88	5220-751-1969	89	5220-751-1993	90	5220-751-2017	91

* Applicable page number in table I, II, or III for design and identification data

Downloaded from http://www.everyspec.com

ORDBA Form 20-14
(OT) Rev 15 Mar

Table IV. Listing of Mil-Std Part Numbers in Numerical Sequence (Continued)

MIL-STD PART NUMBER	PAGE NO.*	MIL-STD PART NUMBER	PAGE NO.*	MIL-STD PART NUMBER	PAGE NO.*	MIL-STD PART NUMBER	PAGE NO.*	MIL-STD PART NUMBER	PAGE NO.*
A	B	A	B	A	B	A	B	A	B
5220-751-2018	91	5220-751-2046	92	5220-751-2070	93	5220-751-2094	94	5220-751-2118	96
5220-751-2019	91	5220-751-2047	92	5220-751-2071	93	5220-751-2095	94	5220-751-2119	96
5220-751-2020	91	5220-751-2048	92	5220-751-2072	93	5220-751-2096	94	5220-751-2120	96
5220-751-2021	91	5220-751-2049	92	5220-751-2073	93	5220-751-2097	94	5220-751-2121	96
5220-751-2022	91	5220-751-2050	93	5220-751-2074	94	5220-751-2098	95	5220-751-2122	96
5220-751-2023	91	5220-751-2051	93	5220-751-2075	94	5220-751-2099	95	5220-751-2123	96
5220-751-2024	91	5220-751-2052	93	5220-751-2076	94	5220-751-2100	95	5220-751-2126	96
5220-751-2025	91	5220-751-2053	93	5220-751-2077	94	5220-751-2101	95	5220-751-2127	96
5220-751-2026	92	5220-751-2054	93	5220-751-2078	94	5220-751-2102	95	5220-751-2128	96
5220-751-2027	92	5220-751-2055	93	5220-751-2079	94	5220-751-2103	95	5220-751-2129	96
5220-751-2028	92	5220-751-2056	93	5220-751-2080	94	5220-751-2104	95	5220-751-2130	96
5220-751-2029	92	5220-751-2057	93	5220-751-2081	94	5220-751-2105	95	5220-751-2131	96
5220-751-2032	21,92	5220-751-2058	93	5220-751-2082	94	5220-751-2106	95	5220-751-2132	96
5220-751-2033	21,92	5220-751-2059	93	5220-751-2083	94	5220-751-2107	95	5220-751-2133	96
5220-751-2034	92	5220-751-2060	93	5220-751-2084	94	5220-751-2108	95	5220-751-2134	96
5220-751-2035	92	5220-751-2061	93	5220-751-2085	94	5220-751-2109	95	5220-751-2135	96
5220-751-2036	92	5220-751-2062	93	5220-751-2086	94	5220-751-2110	95	5220-751-2136	96
5220-751-2037	92	5220-751-2063	93	5220-751-2087	94	5220-751-2111	95	5220-751-2137	96
5220-751-2040	21,92	5220-751-2064	93	5220-751-2088	94	5220-751-2112	95	5220-751-2138	96
5220-751-2041	21,92	5220-751-2065	93	5220-751-2089	94	5220-751-2113	95	5220-751-2139	96
5220-751-2042	92	5220-751-2066	93	5220-751-2090	94	5220-751-2114	95	5220-751-2140	97
5220-751-2043	92	5220-751-2067	93	5220-751-2091	94	5220-751-2115	95	5220-751-2141	97
5220-751-2044	92	5220-751-2068	93	5220-751-2092	94	5220-751-2116	95	5220-751-2142	97
5220-751-2045	92	5220-751-2069	93	5220-751-2093	94	5220-751-2117	95	5220-751-2143	97

* Applicable page number in table I, II, or III for design and identification data

Downloaded from http://www.everyspec.com

ORDBA Form 20-1415
(OT) Rev 15 Mar 6

Table IV. Listing of Mil-Std Part Numbers in Numerical Sequence (Continued)

MIL-STD PART NUMBER	PAGE NO.*	MIL-STD PART NUMBER	PAGE NO.*	MIL-STD PART NUMBER	PAGE NO.*	MIL-STD PART NUMBER	PAGE NO.*	MIL-STD PART NUMBER	PAGE NO.*
A	B	A	B	A	B	A	B	A	B
5220-751-2144	97	5220-751-2168	98	5220-751-2192	99	5220-751-2216	100	5220-751-2242	101
5220-751-2145	97	5220-751-2169	98	5220-751-2193	99	5220-751-2217	100	5220-751-2243	101
5220-751-2146	97	5220-751-2170	98	5220-751-2194	99	5220-751-2218	100,129	5220-751-2244	101
5220-751-2147	97	5220-751-2171	98	5220-751-2195	99	5220-751-2219	100,129	5220-751-2245	101
5220-751-2148	97	5220-751-2172	98	5220-751-2196	99	5220-751-2220	100	5220-751-2246	101
5220-751-2149	97	5220-751-2173	98	5220-751-2197	99	5220-751-2221	100	5220-751-2247	101
5220-751-2150	97	5220-751-2174	98	5220-751-2198	99	5220-751-2222	100	5220-751-2248	101
5220-751-2151	97	5220-751-2175	98	5220-751-2199	99	5220-751-2223	100	5220-751-2249	101
5220-751-2152	97	5220-751-2176	98	5220-751-2200	99	5220-751-2224	100	5220-751-2250	102
5220-751-2153	97	5220-751-2177	98	5220-751-2201	99	5220-751-2225	100	5220-751-2251	102
5220-751-2154	97	5220-751-2178	98	5220-751-2202	99	5220-751-2226	100	5220-751-2252	102
5220-751-2155	97	5220-751-2179	98	5220-751-2203	99	5220-751-2227	100	5220-751-2253	102
5220-751-2156	97	5220-751-2180	98	5220-751-2204	99	5220-751-2228	101	5220-751-2254	102
5220-751-2157	97	5220-751-2181	98	5220-751-2205	99	5220-751-2229	101	5220-751-2255	102
5220-751-2158	97	5220-751-2182	98	5220-751-2206	100	5220-751-2230	34,101	5220-751-2256	102
5220-751-2159	97	5220-751-2183	98	5220-751-2207	100	5220-751-2231	34,101	5220-751-2257	102
5220-751-2160	97	5220-751-2184	99	5220-751-2208	100	5220-751-2232	101	5220-751-2258	129
5220-751-2161	97	5220-751-2185	99	5220-751-2209	100	5220-751-2233	101	5220-751-2259	129
5220-751-2162	98	5220-751-2186	99	5220-751-2210	100	5220-751-2236	101	5220-751-2260	129
5220-751-2163	98	5220-751-2187	99	5220-751-2211	100	5220-751-2237	101	5220-751-2261	129
5220-751-2164	98	5220-751-2188	99	5220-751-2212	100	5220-751-2238	101	5220-751-2262	129
5220-751-2165	98	5220-751-2189	99	5220-751-2213	100	5220-751-2239	101	5220-751-2263	129
5220-751-2166	98	5220-751-2190	99	5220-751-2214	100	5220-751-2240	101	5220-751-2264	102
5220-751-2167	98	5220-751-2191	99	5220-751-2215	100	5220-751-2241	101	5220-751-2265	102

* Applicable page number in table I, II, or III for design and identification data

Downloaded from http://www.everyspec.com

ORDBA Form 20-1415
(OT) Rev 15 M.

Table IV. Listing of Mil-Std Part Numbers in Numerical Sequence (Continued)

MIL-STD PART NUMBER	PAGE NO.*	MIL-STD PART NUMBER	PAGE NO.*	MIL-STD PART NUMBER	PAGE NO.*	MIL-STD PART NUMBER	PAGE NO.*	MIL-STD PART NUMBER	PAGE NO.*
A	B	A	B	A	B	A	B	A	B
5220-751-2266	36,102	5220-751-2294	103	5220-751-2322	105	5220-751-2346	106	5220-751-2370	107
5220-751-2267	36,102	5220-751-2295	103	5220-751-2323	105	5220-751-2347	106	5220-751-2371	107
5220-751-2268	102	5220-751-2296	103	5220-751-2324	105	5220-751-2348	106	5220-751-2372	107
5220-751-2269	102	5220-751-2297	103	5220-751-2325	105	5220-751-2349	106	5220-751-2373	107
5220-751-2272	102	5220-751-2298	103	5220-751-2326	105	5220-751-2350	106	5220-751-2374	107
5220-751-2273	102	5220-751-2299	103	5220-751-2327	105	5220-751-2351	106	5220-751-2375	107
5220-751-2274	102	5220-751-2300	104	5220-751-2328	105	5220-751-2352	106	5220-751-2376	107
5220-751-2275	102	5220-751-2301	104	5220-751-2329	105	5220-751-2353	106	5220-751-2377	107
5220-751-2276	102	5220-751-2302	104	5220-751-2330	105	5220-751-2354	106	5220-751-2378	107
5220-751-2277	102	5220-751-2303	104	5220-751-2331	105	5220-751-2355	106	5220-751-2379	107
5220-751-2278	37,103	5220-751-2304	104	5220-751-2332	105	5220-751-2356	106	5220-751-2380	107
5220-751-2279	37,103	5220-751-2305	104	5220-751-2333	105	5220-751-2357	106	5220-751-2381	107
5220-751-2280	103	5220-751-2308	104	5220-751-2334	105	5220-751-2358	106	5220-751-2382	107
5220-751-2281	103	5220-751-2309	104	5220-751-2335	105	5220-751-2359	106	5220-751-2383	107
5220-751-2284	103	5220-751-2310	104	5220-751-2336	105	5220-751-2360	106	5220-751-2384	107
5220-751-2285	103	5220-751-2311	104	5220-751-2337	105	5220-751-2361	106	5220-751-2385	107
5220-751-2286	103	5220-751-2312	104	5220-751-2338	41,105	5220-751-2362	106	5220-751-2386	107
5220-751-2287	103	5220-751-2313	104	5220-751-2339	41,105	5220-751-2363	106	5220-751-2387	107
5220-751-2288	103	5220-751-2314	40,104	5220-751-2340	105	5220-751-2364	106	5220-751-2388	108
5220-751-2289	103	5220-751-2315	40,104	5220-751-2341	105	5220-751-2365	106	5220-751-2389	108
5220-751-2290	103	5220-751-2316	104	5220-751-2342	105	5220-751-2366	107	5220-751-2390	108
5220-751-2291	103	5220-751-2317	104	5220-751-2343	105	5220-751-2367	107	5220-751-2391	108
5220-751-2292	103	5220-751-2320	104	5220-751-2344	106	5220-751-2368	107	5220-751-2392	108
5220-751-2293	103	5220-751-2321	104	5220-751-2345	106	5220-751-2369	107	5220-751-2393	108

* Applicable page number in table I, II, or III for design and identification data

Downloaded from http://www.everyspec.com

ORDBA Form 20-1415
(OT) Rev 15 Ma[illegible]

Table IV. Listing of Mil-Std Part Numbers in Numerical Sequence (Continued)

MIL-STD PART NUMBER	PAGE NO.*	MIL-STD PART NUMBER	PAGE NO.*	MIL-STD PART NUMBER	PAGE NO.*	MIL-STD PART NUMBER	PAGE NO.*	MIL-STD PART NUMBER	PAGE NO.*
A	B	A	B	A	B	A	B	A	B
5220-751-2394	108	5220-751-2418	109	5220-751-2442	110	5220-751-2466	111	5220-751-2490	112
5220-751-2395	108	5220-751-2419	109	5220-751-2443	110	5220-751-2467	111	5220-751-2491	112
5220-751-2396	108	5220-751-2420	109	5220-751-2444	110	5220-751-2468	111	5220-751-2492	112
5220-751-2397	108	5220-751-2421	109	5220-751-2445	110	5220-751-2469	111	5220-751-2493	112
5220-751-2398	108	5220-751-2422	109	5220-751-2446	110	5220-751-2470	111	5220-751-2494	112
5220-751-2399	108	5220-751-2423	109	5220-751-2447	110	5220-751-2471	111	5220-751-2495	112
5220-751-2400	108	5220-751-2424	109	5220-751-2448	110	5220-751-2472	111	5220-751-2496	112
5220-751-2401	108	5220-751-2425	109	5220-751-2449	110	5220-751-2473	111	5220-751-2497	112
5220-751-2402	108	5220-751-2426	109	5220-751-2450	110	5220-751-2474	111	5220-751-2498	113
5220-751-2403	108	5220-751-2427	109	5220-751-2451	110	5220-751-2475	111	5220-751-2499	113
5220-751-2404	108	5220-751-2428	109	5220-751-2452	110	5220-751-2476	112	5220-751-2500	113
5220-751-2405	108	5220-751-2429	109	5220-751-2453	110	5220-751-2477	112	5220-751-2501	113
5220-751-2406	108	5220-751-2430	109	5220-751-2454	111	5220-751-2478	112	5220-751-2502	113
5220-751-2407	108	5220-751-2431	109	5220-751-2455	111	5220-751-2479	112	5220-751-2503	113
5220-751-2408	108	5220-751-2432	110	5220-751-2456	111	5220-751-2480	112	5220-751-2504	113
5220-751-2409	108	5220-751-2433	110	5220-751-2457	111	5220-751-2481	112	5220-751-2505	113
5220-751-2410	109	5220-751-2434	110	5220-751-2458	111	5220-751-2482	112	5220-751-2506	113
5220-751-2411	109	5220-751-2435	110	5220-751-2459	111	5220-751-2483	112	5220-751-2507	113
5220-751-2412	109	5220-751-2436	110	5220-751-2460	111	5220-751-2484	112	5220-751-2508	113
5220-751-2413	109	5220-751-2437	110	5220-751-2461	111	5220-751-2485	112	5220-751-2509	113
5220-751-2414	109	5220-751-2438	110	5220-751-2462	111	5220-751-2486	112	5220-751-2510	113
5220-751-2415	109	5220-751-2439	110	5220-751-2463	111	5220-751-2487	112	5220-751-2511	113
5220-751-2416	109	5220-751-2440	110	5220-751-2464	111	5220-751-2488	112	5220-751-2512	113
5220-751-2417	109	5220-751-2441	110	5220-751-2465	111	5220-751-2489	112	5220-751-2513	113

* Applicable page number in table I, II, or III for design and identification data

Downloaded from http://www.everyspec.com

ORDBA Form 20-1415
(OT) Rev 15 Mar

Table IV. Listing of Mil-Std Part Numbers in Numerical Sequence (Continued)

MIL-STD PART NUMBER	PAGE NO.*	MIL-STD PART NUMBER	PAGE NO.*	MIL-STD PART NUMBER	PAGE NO.*	MIL-STD PART NUMBER	PAGE NO.*	MIL-STD PART NUMBER	PAGE NO.*
A	B	A	B	A	B	A	B	A	B
5220-751-2514	113	5220-751-2538	114	5220-751-2562	115	5220-751-2586	117	5220-751-2610	118
5220-751-2515	113	5220-751-2539	114	5220-751-2563	115	5220-751-2587	117	5220-751-2611	118
5220-751-2516	113	5220-751-2540	114	5220-751-2564	116	5220-751-2588	117	5220-751-2612	118
5220-751-2517	113	5220-751-2541	114	5220-751-2565	116	5220-751-2589	117	5220-751-2613	118
5220-751-2518	113	5220-751-2542	115	5220-751-2566	116	5220-751-2590	117	5220-751-2614	118
5220-751-2519	113	5220-751-2543	115	5220-751-2567	116	5220-751-2591	117	5220-751-2615	118
5220-751-2520	114	5220-751-2544	115	5220-751-2568	116	5220-751-2592	117	5220-751-2616	118
5220-751-2521	114	5220-751-2545	115	5220-751-2569	116	5220-751-2593	117	5220-751-2617	118
5220-751-2522	114	5220-751-2546	115	5220-751-2570	116	5220-751-2594	117	5220-751-2618	118
5220-751-2523	114	5220-751-2547	115	5220-751-2571	116	5220-751-2595	117	5220-751-2619	118
5220-751-2524	114	5220-751-2548	115	5220-751-2572	116	5220-751-2596	117	5220-751-2620	118
5220-751-2525	114	5220-751-2549	115	5220-751-2573	116	5220-751-2597	117	5220-751-2621	118
5220-751-2526	114	5220-751-2550	115	5220-751-2574	116	5220-751-2598	117	5220-751-2622	118
5220-751-2527	114	5220-751-2551	115	5220-751-2575	116	5220-751-2599	117	5220-751-2623	118
5220-751-2528	114	5220-751-2552	115	5220-751-2576	116	5220-751-2600	117	5220-751-2624	118
5220-751-2529	114	5220-751-2553	115	5220-751-2577	116	5220-751-2601	117	5220-751-2625	118
5220-751-2530	114	5220-751-2554	115	5220-751-2578	116	5220-751-2602	117	5220-751-2626	118
5220-751-2531	114	5220-751-2555	115	5220-751-2579	116	5220-751-2603	117	5220-751-2627	118
5220-751-2532	114	5220-751-2556	115	5220-751-2580	116	5220-751-2604	117	5220-751-2628	118
5220-751-2533	114	5220-751-2557	115	5220-751-2581	116	5220-751-2605	117	5220-751-2629	118
5220-751-2534	114	5220-751-2558	115	5220-751-2582	116	5220-751-2606	117	5220-751-2630	119
5220-751-2535	114	5220-751-2559	115	5220-751-2583	116	5220-751-2607	117	5220-751-2631	119
5220-751-2536	114	5220-751-2560	115	5220-751-2584	116	5220-751-2608	118	5220-751-2632	119
5220-751-2537	114	5220-751-2561	115	5220-751-2585	116	5220-751-2609	118	5220-751-2633	119

* Applicable page number in table I, II, or III for design and identification data

Downloaded from http://www.everyspec.com

ORDBA Form 20-1415
(OT) Rev 15 Mar 61

Table IV. Listing of Mil-Std Part Numbers in Numerical Sequence (Continued)

MIL-STD PART NUMBER	PAGE NO.*	MIL-STD PART NUMBER	PAGE NO.*	MIL-STD PART NUMBER	PAGE NO.*	MIL-STD PART NUMBER	PAGE NO.*	MIL-STD PART NUMBER	PAGE NO.*
A	B	A	B	A	B	A	B	A	B
5220-751-2634	119	5220-751-2658	120	5220-751-2682	121	5220-751-2706	122	5220-751-2730	123
5220-751-2635	119	5220-751-2659	120	5220-751-2683	121	5220-751-2707	122	5220-751-2731	123
5220-751-2636	119	5220-751-2660	120	5220-751-2684	121	5220-751-2708	122	5220-751-2732	123
5220-751-2637	119	5220-751-2661	120	5220-751-2685	121	5220-751-2709	122	5220-751-2733	123
5220-751-2638	119	5220-751-2662	120	5220-751-2686	121	5220-751-2710	122	5220-751-2734	123
5220-751-2639	119	5220-751-2663	120	5220-751-2687	121	5220-751-2711	122	5220-751-2735	123
5220-751-2640	119	5220-751-2664	120	5220-751-2688	121	5220-751-2712	122	5220-751-2736	123
5220-751-2641	119	5220-751-2665	120	5220-751-2689	121	5220-751-2713	122	5220-751-2737	123
5220-751-2642	119	5220-751-2666	120	5220-751-2690	121	5220-751-2714	122	5220-751-2738	123
5220-751-2643	119	5220-751-2667	120	5220-751-2691	121	5220-751-2715	122	5220-751-2739	123
5220-751-2644	119	5220-751-2668	120	5220-751-2692	121	5220-751-2716	122	5220-751-2740	124
5220-751-2645	119	5220-751-2669	120	5220-751-2693	121	5220-751-2717	122	5220-751-2741	124
5220-751-2646	119	5220-751-2670	120	5220-751-2694	121	5220-751-2718	123	5220-751-2742	124
5220-751-2647	119	5220-751-2671	120	5220-751-2695	121	5220-751-2719	123	5220-751-2743	124
5220-751-2648	119	5220-751-2672	120	5220-751-2696	122	5220-751-2720	123	5220-751-2744	124
5220-751-2649	119	5220-751-2673	120	5220-751-2697	122	5220-751-2721	123	5220-751-2745	124
5220-751-2650	119	5220-751-2674	121	5220-751-2698	122	5220-751-2722	123	5220-751-2746	124
5220-751-2651	119	5220-751-2675	121	5220-751-2699	122	5220-751-2723	123	5220-751-2747	124
5220-751-2652	120	5220-751-2676	121	5220-751-2700	122	5220-751-2724	123	5220-751-2748	124
5220-751-2653	120	5220-751-2677	121	5220-751-2701	122	5220-751-2725	123	5220-751-2749	124
5220-751-2654	120	5220-751-2678	121	5220-751-2702	122	5220-751-2726	123	5220-751-2750	124
5220-751-2655	120	5220-751-2679	121	5220-751-2703	122	5220-751-2727	123	5220-751-2751	124
5220-751-2656	120	5220-751-2680	121	5220-751-2704	122	5220-751-2728	123	5220-751-2752	124
5220-751-2657	120	5220-751-2681	121	5220-751-2705	122	5220-751-2729	123	5220-751-2753	124

* Applicable page number in table I, II, or III for design and identification data

Downloaded from http://www.everyspec.com

ORDBA Form 20-1415
(OT) Rev 15 Mar 61

Table IV. Listing of Mil-Std Part Numbers in Numerical Sequence (Continued)

MIL-STD PART NUMBER	PAGE NO.*	MIL-STD PART NUMBER	PAGE NO.*	MIL-STD PART NUMBER	PAGE NO.*	MIL-STD PART NUMBER	PAGE NO.*	MIL-STD PART NUMBER	PAGE NO.*
A	B	A	B	A	B	A	B	A	B
5220-751-2754	125	5220-751-2778	126	5220-751-5370	13	5220-751-5396	14	5220-751-5420	15
5220-751-2755	125	5220-751-2779	126	5220-751-5371	13	5220-751-5397	14	5220-751-5421	15
5220-751-2756	125	5220-751-2780	126	5220-751-5372	13	5220-751-5398	14	5220-751-5422	15
5220-751-2757	125	5220-751-2781	126	5220-751-5373	13	5220-751-5399	14	5220-751-5423	15
5220-751-2758	125	5220-751-2782	127	5220-751-5374	13	5220-751-5400	14	5220-751-5424	15
5220-751-2759	125	5220-751-2783	127	5220-751-5375	13	5220-751-5401	14	5220-751-5425	15
5220-751-2760	125	5220-751-2784	127	5220-751-5376	13	5220-751-5402	14	5220-751-5426	15
5220-751-2761	125	5220-751-2785	127	5220-751-5377	13	5220-751-5403	14	5220-751-5427	15
5220-751-2762	125	5220-751-2786	127	5220-751-5380	13	5220-751-5404	14	5220-751-5428	15
5220-751-2763	125	5220-751-2787	127	5220-751-5381	13	5220-751-5405	14	5220-751-5429	15
5220-751-2764	125	5220-751-2788	127	5220-751-5382	13	5220-751-5406	14	5220-751-5430	15
5220-751-2765	125	5220-751-2789	127	5220-751-5383	13	5220-751-5407	14	5220-751-5431	15
5220-751-2766	125	5220-751-2790	127	5220-751-5384	14	5220-751-5408	15	5220-751-5432	16
5220-751-2767	125	5220-751-2791	127	5220-751-5385	14	5220-751-5409	15	5220-751-5433	16
5220-751-2768	126	5220-751-2792	127	5220-751-5386	14	5220-751-5410	15	5220-751-5434	16
5220-751-2769	126	5220-751-2793	127	5220-751-5387	14	5220-751-5411	15	5220-751-5435	16
5220-751-2770	126	5220-751-2794	127	5220-751-5388	14	5220-751-5412	15	5220-751-5440	16
5220-751-2771	126	5220-751-2795	127	5220-751-5389	14	5220-751-5413	15	5220-751-5441	16
5220-751-2772	126	5220-751-5360	13	5220-751-5390	14	5220-751-5414	15	5220-751-5442	16
5220-751-2773	126	5220-751-5361	13	5220-751-5391	14	5220-751-5415	15	5220-751-5443	16
5220-751-2774	126	5220-751-5364	13,81	5220-751-5392	14	5220-751-5416	15	5220-751-5444	16
5220-751-2775	126	5220-751-5365	13,81	5220-751-5393	14	5220-751-5417	15	5220-751-5445	16
5220-751-2776	126	5220-751-5368	13	5220-751-5394	14	5220-751-5418	15	5220-751-5446	16
5220-751-2777	126	5220-751-5369	13	5220-751-5395	14	5220-751-5419	15	5220-751-5447	16

* Applicable page number in table I, II, or III for design and identification data

Downloaded from http://www.everyspec.com

ORDBA Form 20-1415
(OT) Rev 15 Ma.

Table IV. Listing of Mil-Std Part Numbers in Numerical Sequence (Continued)

MIL-STD PART NUMBER	PAGE NO.*	MIL-STD PART NUMBER	PAGE NO.*	MIL-STD PART NUMBER	PAGE NO.*	MIL-STD PART NUMBER	PAGE NO.*	MIL-STD PART NUMBER	PAGE NO.*
A	B	A	B	A	B	A	B	A	B
5220-751-5448	16	5220-751-5472	17	5220-751-5496	18	5220-751-5520	20	5220-751-5544	21,92
5220-751-5449	16	5220-751-5473	17	5220-751-5497	18	5220-751-5521	20	5220-751-5545	21,92
5220-751-5450	16	5220-751-5474	17	5220-751-5498	18	5220-751-5522	20	5220-751-5548	21
5220-751-5451	16	5220-751-5475	17	5220-751-5499	18	5220-751-5523	20	5220-751-5549	21
5220-751-5452	16	5220-751-5476	17	5220-751-5500	18	5220-751-5524	20	5220-751-5550	21
5220-751-5453	16	5220-751-5477	17	5220-751-5501	18	5220-751-5525	20	5220-751-5551	21
5220-751-5454	16	5220-751-5478	17	5220-751-5502	18	5220-751-5526	20	5220-751-5552	21,92
5220-751-5455	16	5220-751-5479	17	5220-751-5503	18	5220-751-5527	20	5220-751-5553	21,92
5220-751-5456	17	5220-751-5480	18	5220-751-5504	19	5220-751-5528	20	5220-751-5556	21
5220-751-5457	17	5220-751-5481	18	5220-751-5505	19	5220-751-5529	20	5220-751-5557	21
5220-751-5458	17	5220-751-5482	18	5220-751-5506	19	5220-751-5530	20	5220-751-5558	21
5220-751-5459	17	5220-751-5483	18	5220-751-5507	19	5220-751-5531	20	5220-751-5559	21
5220-751-5460	17	5220-751-5484	18	5220-751-5508	19	5220-751-5532	20	5220-751-5560	22
5220-751-5461	17	5220-751-5485	18	5220-751-5509	19	5220-751-5533	20	5220-751-5561	22
5220-751-5462	17	5220-751-5486	18	5220-751-5510	19	5220-751-5534	20	5220-751-5562	22
5220-751-5463	17	5220-751-5487	18	5220-751-5511	19	5220-751-5535	20	5220-751-5563	22
5220-751-5464	17	5220-751-5488	18	5220-751-5512	19	5220-751-5536	20	5220-751-5564	22
5220-751-5465	17	5220-751-5489	18	5220-751-5513	19	5220-751-5537	20	5220-751-5565	22
5220-751-5466	17	5220-751-5490	18	5220-751-5514	19	5220-751-5538	20	5220-751-5566	22
5220-751-5467	17	5220-751-5491	18	5220-751-5515	19	5220-751-5539	20	5220-751-5567	22
5220-751-5468	17	5220-751-5492	18	5220-751-5516	19	5220-751-5540	20	5220-751-5568	22
5220-751-5469	17	5220-751-5493	18	5220-751-5517	19	5220-751-5541	20	5220-751-5569	22
5220-751-5470	17	5220-751-5494	18	5220-751-5518	19	5220-751-5542	20	5220-751-5570	22
5220-751-5471	17	5220-751-5495	18	5220-751-5519	19	5220-751-5543	20	5220-751-5571	22

* Applicable page number in table I, II, or III for design and identification data

Downloaded from http://www.everyspec.com

ORDBA Form 20-1415
(OT) Rev 15 Mar 61

Table IV. Listing of Mil-Std Part Numbers in Numerical Sequence (Continued)

MIL-STD PART NUMBER	PAGE NO.*	MIL-STD PART NUMBER	PAGE NO.*	MIL-STD PART NUMBER	PAGE NO.*	MIL-STD PART NUMBER	PAGE NO.*	MIL-STD PART NUMBER	PAGE NO.*
A	B	A	B	A	B	A	B	A	B
5220-751-5572	22	5220-751-5596	24	5220-751-5620	25	5220-751-5644	27	5220-751-5668	29
5220-751-5573	22	5220-751-5597	24	5220-751-5621	25	5220-751-5645	27	5220-751-5669	29
5220-751-5574	22	5220-751-5598	24	5220-751-5622	25	5220-751-5646	27	5220-751-5670	29
5220-751-5575	22	5220-751-5599	24	5220-751-5623	25	5220-751-5647	27	5220-751-5671	29
5220-751-5576	23	5220-751-5600	24	5220-751-5624	25	5220-751-5648	27	5220-751-5672	29
5220-751-5577	23	5220-751-5601	24	5220-751-5625	25	5220-751-5649	27	5220-751-5673	29
5220-751-5578	23	5220-751-5602	24	5220-751-5626	26	5220-751-5650	27	5220-751-5674	30
5220-751-5579	23	5220-751-5603	24	5220-751-5627	26	5220-751-5651	27	5220-751-5675	30
5220-751-5580	23	5220-751-5604	24	5220-751-5628	26	5220-751-5652	27	5220-751-5676	30
5220-751-5581	23	5220-751-5605	24	5220-751-5629	26	5220-751-5653	27	5220-751-5677	30
5220-751-5582	23	5220-751-5606	24	5220-751-5630	26	5220-751-5654	28	5220-751-5678	31
5220-751-5583	23	5220-751-5607	24	5220-751-5631	26	5220-751-5655	28	5220-751-5679	31
5220-751-5584	23	5220-751-5608	25	5220-751-5632	26	5220-751-5656	28	5220-751-5680	31
5220-751-5585	23	5220-751-5609	25	5220-751-5633	26	5220-751-5657	28	5220-751-5681	31
5220-751-5586	23	5220-751-5610	25	5220-751-5634	26,96	5220-751-5658	28	5220-751-5682	31
5220-751-5587	23	5220-751-5611	25	5220-751-5635	26,96	5220-751-5659	28	5220-751-5683	31
5220-751-5588	23	5220-751-5612	25	5220-751-5636	26	5220-751-5660	28	5220-751-5684	31
5220-751-5589	23	5220-751-5613	25	5220-751-5637	26	5220-751-5661	28	5220-751-5685	31
5220-751-5590	23	5220-751-5614	25	5220-751-5638	26	5220-751-5662	28	5220-751-5686	31
5220-751-5591	23	5220-751-5615	25	5220-751-5639	26	5220-751-5663	28	5220-751-5687	31
5220-751-5592	24	5220-751-5616	25	5220-751-5640	27	5220-751-5664	29	5220-751-5688	32
5220-751-5593	24	5220-751-5617	25	5220-751-5641	27	5220-751-5665	29	5220-751-5689	32
5220-751-5594	24	5220-751-5618	25	5220-751-5642	27	5220-751-5666	29	5220-751-5690	32
5220-751-5595	24	5220-751-5619	25	5220-751-5643	27	5220-751-5667	29	5220-751-5691	32

* Applicable page number in table I, II, or III for design and identification data

Downloaded from http://www.everyspec.com

ORDBA Form 20-1415
(OT) Rev 15 Mar. 61

Table IV. Listing of Mil-Std Part Numbers in Numerical Sequence (Continued)

MIL-STD PART NUMBER	PAGE NO.*	MIL-STD PART NUMBER	PAGE NO.*	MIL-STD PART NUMBER	PAGE NO.*	MIL-STD PART NUMBER	PAGE NO.*	MIL-STD PART NUMBER	PAGE NO.*
A	B	A	B	A	B	A	B	A	B
5220-751-5692	32	5220-751-5716	34,101	5220-751-5740	36	5220-751-5764	39	5220-751-5788	41
5220-751-5693	32	5220-751-5717	34,101	5220-751-5741	36	5220-751-5765	39	5220-751-5789	41
5220-751-5694	32	5220-751-5718	35	5220-751-5742	37,102	5220-751-5766	39	5220-751-5790	41
5220-751-5695	32	5220-751-5719	35	5220-751-5743	37,102	5220-751-5767	39	5220-751-5791	41
5220-751-5696	32	5220-751-5720	35	5220-751-5744	37	5220-751-5768	39	5220-751-5792	41
5220-751-5697	32	5220-751-5721	35	5220-751-5745	37	5220-751-5769	39	5220-751-5793	41
5220-751-5698	33	5220-751-5722	36	5220-751-5746	37	5220-751-5770	39,104	5220-751-5794	41
5220-751-5699	33	5220-751-5723	36	5220-751-5747	37	5220-751-5771	39,104	5220-751-5795	41
5220-751-5700	33	5220-751-5724	36	5220-751-5748	38	5220-751-5772	40	5220-751-5796	42
5220-751-5701	33	5220-751-5725	36	5220-751-5749	38	5220-751-5773	40	5220-751-5797	42
5220-751-5702	33	5220-751-5726	36	5220-751-5750	38,103	5220-751-5774	40	5220-751-5798	42
5220-751-5703	33	5220-751-5727	36	5220-751-5751	38,103	5220-751-5775	40	5220-751-5799	42
5220-751-5704	33	5220-751-5728	36	5220-751-5752	38	5220-751-5776	40	5220-751-5800	42
5220-751-5705	33	5220-751-5729	36	5220-751-5753	38	5220-751-5777	40	5220-751-5801	42
5220-751-5706	34	5220-751-5730	36	5220-751-5754	38	5220-751-5778	40,104	5220-751-5802	42
5220-751-5707	34	5220-751-5731	36	5220-751-5755	38	5220-751-5779	40,104	5220-751-5803	42
5220-751-5708	34	5220-751-5732	36	5220-751-5756	38	5220-751-5780	41	5220-751-5804	43
5220-751-5709	34	5220-751-5733	36	5220-751-5757	38	5220-751-5781	41	5220-751-5805	43
5220-751-5710	34	5220-751-5734	129	5220-751-5758	38	5220-751-5782	41	5220-751-5806	43
5220-751-5711	34	5220-751-5735	129	5220-751-5759	38	5220-751-5783	41	5220-751-5807	43
5220-751-5712	34	5220-751-5736	129	5220-751-5760	38	5220-751-5784	41	5220-751-5808	43
5220-751-5713	34	5220-751-5737	129	5220-751-5761	38	5220-751-5785	41	5220-751-5809	43
5220-751-5714	34	5220-751-5738	129	5220-751-5762	39	5220-751-5786	41	5220-751-5810	43
5220-751-5715	34	5220-751-5739	129	5220-751-5763	39	5220-751-5787	41	5220-751-5811	43

* Applicable page number in table I, II, or III for design and identification data

Downloaded from http://www.everyspec.com

ORDBA Form 20-1415
(OT) Rev 15 Mar 61

Table IV. Listing of Mil-Std Part Numbers in Numerical Sequence (Continued)

MIL-STD PART NUMBER	PAGE NO.*	MIL-STD PART NUMBER	PAGE NO.*	MIL-STD PART NUMBER	PAGE NO.*	MIL-STD PART NUMBER	PAGE NO.*	MIL-STD PART NUMBER	PAGE NO.*
A	B	A	B	A	B	A	B	A	B
5220-751-5812	43	5220-751-5836	46	5220-751-5860	49	5220-751-5884	51	5220-751-5908	53
5220-751-5813	43	5220-751-5837	46	5220-751-5861	49	5220-751-5885	51	5220-751-5909	53
5220-751-5814	43	5220-751-5838	46	5220-751-5862	49	5220-751-5886	51	5220-751-5910	54
5220-751-5815	43	5220-751-5839	46	5220-751-5863	49	5220-751-5887	51	5220-751-5911	54
5220-751-5816	44	5220-751-5840	46	5220-751-5864	49	5220-751-5888	51	5220-751-5912	54
5220-751-5817	44	5220-751-5841	46	5220-751-5865	49	5220-751-5889	51	5220-751-5913	54
5220-751-5818	44	5220-751-5842	46	5220-751-5866	49	5220-751-5890	51	5220-751-5914	55
5220-751-5819	44	5220-751-5843	46	5220-751-5867	49	5220-751-5891	51	5220-751-5915	55
5220-751-5820	44	5220-751-5844	46	5220-751-5868	49	5220-751-5892	52	5220-751-5916	55
5220-751-5821	44	5220-751-5845	46	5220-751-5869	49	5220-751-5893	52	5220-751-5917	55
5220-751-5822	44	5220-751-5846	46	5220-751-5870	49	5220-751-5894	52	5220-751-5918	55
5220-751-5823	44	5220-751-5847	46	5220-751-5871	49	5220-751-5895	52	5220-751-5919	55
5220-751-5824	44	5220-751-5848	46	5220-751-5872	50	5220-751-5896	52	5220-751-5920	55
5220-751-5825	44	5220-751-5849	46	5220-751-5873	50	5220-751-5897	52	5220-751-5921	55
5220-751-5826	44	5220-751-5850	47	5220-751-5874	50	5220-751-5898	53	5220-751-5922	55
5220-751-5827	44	5220-751-5851	47	5220-751-5875	50	5220-751-5899	53	5220-751-5923	55
5220-751-5828	45	5220-751-5852	47	5220-751-5876	51	5220-751-5900	53	5220-751-5924	55
5220-751-5829	45	5220-751-5853	47	5220-751-5877	51	5220-751-5901	53	5220-751-5925	55
5220-751-5830	45	5220-751-5854	47	5220-751-5878	51	5220-751-5902	53	5220-751-5926	55
5220-751-5831	45	5220-751-5855	47	5220-751-5879	51	5220-751-5903	53	5220-751-5927	55
5220-751-5832	45	5220-751-5856	48	5220-751-5880	51	5220-751-5904	53	5220-751-5928	55
5220-751-5833	45	5220-751-5857	48	5220-751-5881	51	5220-751-5905	53	5220-751-5929	55
5220-751-5834	45	5220-751-5858	48	5220-751-5882	51	5220-751-5906	53	5220-751-5930	55
5220-751-5835	45	5220-751-5859	48	5220-751-5883	51	5220-751-5907	53	5220-751-5931	55

* Applicable page number in table I, II, or III for design and identification data

Downloaded from http://www.everyspec.com

Table IV. Listing of Mil-Std Part Numbers in Numerical Sequence (Continued)

MIL-STD PART NUMBER	PAGE NO.*	MIL-STD PART NUMBER	PAGE NO.*	MIL-STD PART NUMBER	PAGE NO.*	MIL-STD PART NUMBER	PAGE NO.*	MIL-STD PART NUMBER	PAGE NO.*
A	B	A	B	A	B	A	B	A	B
5220-751-5932	130	5220-751-5956	57	5220-751-5980	58	5220-751-6004	60	5220-751-6028	62
5220-751-5933	130	5220-751-5957	57	5220-751-5981	58	5220-751-6005	60	5220-751-6029	62
5220-751-5934	130	5220-751-5958	57	5220-751-5982	130	5220-751-6006	60	5220-751-6030	62
5220-751-5935	130	5220-751-5959	57	5220-751-5983	130	5220-751-6007	60	5220-751-6031	62
5220-751-5936	56	5220-751-5960	57	5220-751-5984	130	5220-751-6008	60	5220-751-6032	62
5220-751-5937	56	5220-751-5961	57	5220-751-5985	130	5220-751-6009	60	5220-751-6033	62
5220-751-5938	56	5220-751-5962	57	5220-751-5986	59	5220-751-6010	61	5220-751-6034	63
5220-751-5939	56	5220-751-5963	57	5220-751-5987	59	5220-751-6011	61	5220-751-6035	63
5220-751-5940	56	5220-751-5964	57	5220-751-5988	59	5220-751-6012	61	5220-751-6036	63
5220-751-5941	56	5220-751-5965	57	5220-751-5989	59	5220-751-6013	61	5220-751-6037	63
5220-751-5942	56	5220-751-5966	57	5220-751-5990	59	5220-751-6014	61	5220-751-6038	63
5220-751-5943	56	5220-751-5967	57	5220-751-5991	59	5220-751-6015	61	5220-751-6039	63
5220-751-5944	56	5220-751-5968	58	5220-751-5992	59	5220-751-6016	61	5220-751-6040	63
5220-751-5945	56	5220-751-5969	58	5220-751-5993	59	5220-751-6017	61	5220-751-6041	63
5220-751-5946	56	5220-751-5970	130	5220-751-5994	59	5220-751-6018	61	5220-751-6042	63
5220-751-5947	56	5220-751-5971	130	5220-751-5995	59	5220-751-6019	61	5220-751-6043	63
5220-751-5948	130	5220-751-5972	130	5220-751-5996	59	5220-751-6020	61	5220-751-6044	63
5220-751-5949	130	5220-751-5973	130	5220-751-5997	59	5220-751-6021	61	5220-751-6045	63
5220-751-5950	130	5220-751-5974	58	5220-751-5998	59	5220-751-6022	61	5220-751-6046	63
5220-751-5951	130	5220-751-5975	58	5220-751-5999	59	5220-751-6023	61	5220-751-6047	63
5220-751-5952	57	5220-751-5976	58	5220-751-6000	60	5220-751-6024	62	5220-751-6048	64
5220-751-5953	57	5220-751-5977	58	5220-751-6001	60	5220-751-6025	62	5220-751-6049	64
5220-751-5954	57	5220-751-5978	58	5220-751-6002	60	5220-751-6026	62	5220-751-6050	64
5220-751-5955	57	5220-751-5979	58	5220-751-6003	60	5220-751-6027	62	5220-751-6051	64

* Applicable page number in table I, II, or III for design and identification data

Downloaded from http://www.everyspec.com

Table IV. Listing of Mil-Std Part Numbers in Numberical Sequence (Continued)

MIL-STD PART NUMBER	PAGE NO.*	MIL-STD PART NUMBER	PAGE NO.*	MIL-STD PART NUMBER	PAGE NO.*	MIL-STD PART NUMBER	PAGE NO.*	MIL-STD PART NUMBER	PAGE NO.*
A	B	A	B	A	B	A	B	A	B
5220-751-6052	64	5220-751-6076	66	5220-751-6100	67	5220-751-6124	69	5220-751-6148	70
5220-751-6053	64	5220-751-6077	66	5220-751-6101	67	5220-751-6125	69	5220-751-6149	70
5220-751-6054	64	5220-751-6078	66	5220-751-6102	67	5220-751-6126	69	5220-751-6150	71
5220-751-6055	64	5220-751-6079	66	5220-751-6103	67	5220-751-6127	69	5220-751-6151	71
5220-751-6056	64	5220-751-6080	66	5220-751-6104	67	5220-751-6128	69	5220-751-6152	71
5220-751-6057	64	5220-751-6081	66	5220-751-6105	67	5220-751-6129	69	5220-751-6153	71
5220-751-6058	65	5220-751-6082	66	5220-751-6106	67	5220-751-6130	69	5220-751-6154	71
5220-751-6059	65	5220-751-6083	66	5220-751-6107	67	5220-751-6131	69	5220-751-6155	71
5220-751-6060	65	5220-751-6084	66	5220-751-6108	68	5220-751-6132	69	5220-751-6156	71
5220-751-6061	65	5220-751-6085	66	5220-751-6109	68	5220-751-6133	69	5220-751-6157	71
5220-751-6062	65	5220-751-6086	66	5220-751-6110	68	5220-751-6134	70	5220-751-6158	71
5220-751-6063	65	5220-751-6087	66	5220-751-6111	68	5220-751-6135	70	5220-751-6159	71
5220-751-6064	65	5220-751-6088	66	5220-751-6112	68	5220-751-6136	70	5220-751-6160	131
5220-751-6065	65	5220-751-6089	66	5220-751-6113	68	5220-751-6137	70	5220-751-6161	131
5220-751-6066	65	5220-751-6090	67	5220-751-6114	68	5220-751-6138	70	5220-751-6162	131
5220-751-6067	65	5220-751-6091	67	5220-751-6115	68	5220-751-6139	70	5220-751-6163	131
5220-751-6068	65	5220-751-6092	67	5220-751-6116	68	5220-751-6140	70	5220-751-6164	72
5220-751-6069	65	5220-751-6093	67	5220-751-6117	68	5220-751-6141	70	5220-751-6165	72
5220-751-6070	65	5220-751-6094	67	5220-751-6118	68	5220-751-6142	70	5220-751-6166	72
5220-751-6071	65	5220-751-6095	67	5220-751-6119	68	5220-751-6143	70	5220-751-6167	72
5220-751-6072	65	5220-751-6096	67	5220-751-6120	68	5220-751-6144	70	5220-751-6168	72
5220-751-6073	65	5220-751-6097	67	5220-751-6121	68	5220-751-6145	70	5220-751-6169	72
5220-751-6074	65	5220-751-6098	67	5220-751-6122	69	5220-751-6146	70	5220-751-6170	72
5220-751-6075	65	5220-751-6099	67	5220-751-6123	69	5220-751-6147	70	5220-751-6171	72

* Applicable page number in table I, II, or III for design and identification data

Downloaded from http://www.everyspec.com

Table IV. Listing of Mil-Std Part Numbers in Numerical Sequence (Continued)

MIL-STD PART NUMBER	PAGE NO.*	MIL-STD PART NUMBER	PAGE NO.*	MIL-STD PART NUMBER	PAGE NO.*	MIL-STD PART NUMBER	PAGE NO.*	MIL-STD PART NUMBER	PAGE NO.*
A	B	A	B	A	B	A	B	A	B
5220-751-6172	131	5220-751-6196	131	5220-751-6220	131	5220-751-6244	132	5220-751-6968	19
5220-751-6173	131	5220-751-6197	131	5220-751-6221	131	5220-751-6245	132	5220-751-6969	19
5220-751-6174	131	5220-751-6198	131	5220-751-6222	132	5220-751-6246	132	5220-751-6970	19
5220-751-6175	131	5220-751-6199	131	5220-751-6223	132	5220-751-6247	132	5220-751-6971	19
5220-751-6176	73	5220-751-6200	76	5220-751-6224	78	5220-751-6248	79	5220-751-6972	19
5220-751-6177	73	5220-751-6201	76	5220-751-6225	78	5220-751-6249	79	5220-751-6973	19
5220-751-6178	73	5220-751-6202	76	5220-751-6226	78	5220-751-6250	79	5220-751-6974	129
5220-751-6179	73	5220-751-6203	76	5220-751-6227	78	5220-751-6251	79	5220-751-6975	129
5220-751-6180	73	5220-751-6204	76	5220-751-6228	78	5220-751-6252	80	5220-751-6976	29
5220-751-6181	73	5220-751-6205	76	5220-751-6229	78	5220-751-6253	80	5220-751-6977	29
5220-751-6182	73	5220-751-6206	76	5220-751-6230	78	5220-751-6254	80	5220-751-6978	29
5220-751-6183	73	5220-751-6207	76	5220-751-6231	78	5220-751-6255	80	5220-751-6979	29
5220-751-6184	131	5220-751-6208	131	5220-751-6232	132	5220-751-6770	16	5220-751-6980	30
5220-751-6185	131	5220-751-6209	131	5220-751-6233	132	5220-751-6771	16	5220-751-6981	30
5220-751-6186	131	5220-751-6210	131	5220-751-6234	132	5220-751-6772	16	5220-751-6982	30
5220-751-6187	131	5220-751-6211	131	5220-751-6235	132	5220-751-6773	16	5220-751-6983	30
5220-751-6188	74	5220-751-6212	77	5220-751-6236	78	5220-751-6774	81	5220-751-6984	31
5220-751-6189	74	5220-751-6213	77	5220-751-6237	78	5220-751-6775	81	5220-751-6985	31
5220-751-6190	75	5220-751-6214	77	5220-751-6238	79	5220-751-6776	82	5220-751-6986	32
5220-751-6191	75	5220-751-6215	77	5220-751-6239	79	5220-751-6777	82	5220-751-6987	32
5220-751-6192	75	5220-751-6216	77	5220-751-6240	79	5220-751-6778	83	5220-751-6988	32
5220-751-6193	75	5220-751-6217	77	5220-751-6241	79	5220-751-6779	83	5220-751-6989	32
5220-751-6194	75	5220-751-6218	77	5220-751-6242	79	5220-751-6966	19	5220-751-6990	33
5220-751-6195	75	5220-751-6219	77	5220-751-6243	79	5220-751-6967	19	5220-751-6991	33

* Applicable page number in table I, II, or III for design and identification data

Downloaded from http://www.everyspec.com

Table IV. Listing of Mil-Std Part Numbers in Numerical Sequence (Continued)

MIL-STD PART NUMBER	PAGE NO.*	MIL-STD PART NUMBER	PAGE NO.*	MIL-STD PART NUMBER	PAGE NO.*	MIL-STD PART NUMBER	PAGE NO.*	MIL-STD PART NUMBER	PAGE NO.*
A	B	A	B	A	B	A	B	A	B
5220-751-6992	33	5220-751-7016	39	5220-751-7040	48	5220-751-7064	124	5220-751-7088	127
5220-751-6993	33	5220-751-7017	39	5220-751-7041	48	5220-751-7065	124	5220-751-7089	127
5220-751-6994	33	5220-751-7018	40	5220-751-7042	49	5220-751-7066	125	7518122	21
5220-751-6995	33	5220-751-7019	40	5220-751-7043	49	5220-751-7067	125	7518123	21
5220-751-6996	34	5220-751-7020	41	5220-751-7044	49	5220-751-7068	125	7518124	21
5220-751-6997	34	5220-751-7021	41	5220-751-7045	49	5220-751-7069	125	7518125	21
5220-751-6998	34	5220-751-7022	42	5220-751-7046	50	5220-751-7070	125	7518126	21
5220-751-6999	34	5220-751-7023	42	5220-751-7047	50	5220-751-7071	125	7518127	21
5220-751-7000	34	5220-751-7024	43	5220-751-7048	50	5220-751-7072	125	7518128	21
5220-751-7001	34	5220-751-7025	43	5220-751-7049	50	5220-751-7073	125	7518129	21
5220-751-7002	35	5220-751-7026	44	5220-751-7050	90	5220-751-7074	126	7518130	22
5220-751-7003	35	5220-751-7027	44	5220-751-7051	90	5220-751-7075	126	7518131	22
5220-751-7004	35	5220-751-7028	44	5220-751-7052	90	5220-751-7076	126	7518132	22
5220-751-7005	35	5220-751-7029	44	5220-751-7053	90	5220-751-7077	126	7518133	22
5220-751-7006	35	5220-751-7030	45	5220-751-7054	90	5220-751-7078	126	7518134	22
5220-751-7007	35	5220-751-7031	45	5220-751-7055	90	5220-751-7079	126	7518135	22
5220-751-7008	35	5220-751-7032	45	5220-751-7056	90	5220-751-7080	126	7518136	22
5220-751-7009	35	5220-751-7033	45	5220-751-7057	90	5220-751-7081	126	7518137	22
5220-751-7010	36	5220-751-7034	47	5220-751-7058	124	5220-751-7082	127	7518138	23
5220-751-7011	36	5220-751-7035	47	5220-751-7059	124	5220-751-7083	127	7518139	23
5220-751-7012	37	5220-751-7036	47	5220-751-7060	124	5220-751-7084	127	7518140	23
5220-751-7013	37	5220-751-7037	47	5220-751-7061	124	5220-751-7085	127	7518141	23
5220-751-7014	39	5220-751-7038	48	5220-751-7062	124	5220-751-7086	127	7518142	23
5220-751-7015	39	5220-751-7039	48	5220-751-7063	124	5220-751-7087	127	7518143	23

* Applicable page number in table I, II, or III for design and identification data

Downloaded from http://www.everyspec.com

Table IV. Listing of Mil-Std Part Numbers in Numerical Sequence (Continued)

MIL-STD PART NUMBER	PAGE NO.*	MIL-STD PART NUMBER	PAGE NO.*	MIL-STD PART NUMBER	PAGE NO.*	MIL-STD PART NUMBER	PAGE NO.*	MIL-STD PART NUMBER	PAGE NO.*
A	B	A	B	A	B	A	B	A	B
7518144	23	7518168	27	7518192	29	7518216	31	7518240	35
7518145	23	7518169	27	7518193	29	7518217	31	7518241	35
7518146	24	7518170	27	7518194	30	7518218	32	7518242	35
7518147	24	7518171	27	7518195	30	7518219	32	7518243	35
7518148	24	7518172	27	7518196	30	7518220	32	7518244	35
7518149	24	7518173	27	7518197	30	7518221	32	7518245	35
7518150	24	7518174	28	7518198	30	7518222	32	7518246	36
7518151	24	7518175	28	7518199	30	7518223	32	7518247	36
7518152	24	7518176	28	7518200	30	7518224	32	7518248	36
7518153	24	7518177	28	7518201	30	7518225	32	7518249	36
7518154	25	7518178	28	7518202	30	7518226	33	7518250	37
7518155	25	7518179	28	7518203	30	7518227	33	7518251	37
7518156	25	7518180	28	7518204	30	7518228	33	7518252	37
7518157	25	7518181	28	7518205	30	7518229	33	7518253	37
7518158	26	7518182	28	7518206	30	7518230	33	7518254	37
7518159	26	7518183	28	7518207	30	7518231	33	7518255	37
7518160	26	7518184	28	7518208	31	7518232	33	7518256	37
7518161	26	7518185	28	7518209	31	7518233	33	7518257	37
7518162	26	7518186	29	7518210	31	7518234	34	7518258	37
7518163	26	7518187	29	7518211	31	7518235	34	7518259	37
7518164	26	7518188	29	7518212	31	7518236	35	7518260	37
7518165	26	7518189	29	7518213	31	7518237	35	7518261	37
7518166	27	7518190	29	7518214	31	7518238	35	7518262	38
7518167	27	7518191	29	7518215	31	7518239	35	7518263	38

* Applicable page number in table I, II, or III for design and identification data

Downloaded from http://www.everyspec.com

Table IV. Listing of Mil-Std Part Numbers in Numerical Sequence (Continued)

MIL-STD PART NUMBER	PAGE NO.*	MIL-STD PART NUMBER	PAGE NO.*	MIL-STD PART NUMBER	PAGE NO.*	MIL-STD PART NUMBER	PAGE NO.*	MIL-STD PART NUMBER	PAGE NO.*
A	B	A	B	A	B	A	B	A	B
7518264	38	7518288	41	7518312	44	7518336	47	7518360	49
7518265	38	7518289	41	7518313	44	7518337	47	7518361	49
7518266	38	7518290	42	7518314	44	7518338	47	7518362	49
7518267	38	7518291	42	7518315	44	7518339	47	7518363	49
7518268	38	7518292	42	7518316	45	7518340	47	7518364	49
7518269	38	7518293	42	7518317	45	7518341	47	7518365	49
7518270	39	7518294	42	7518318	45	7518342	47	7518366	50
7518271	39	7518295	42	7518319	45	7518343	47	7518367	50
7518272	39	7518296	42	7518320	45	7518344	47	7518368	50
7518273	39	7518297	42	7518321	45	7518345	47	7518369	50
7518274	39	7518298	42	7518322	45	7518346	48	7518370	50
7518275	39	7518299	42	7518323	45	7518347	48	7518371	50
7518276	39	7518300	42	7518324	45	7518348	48	7518372	50
7518277	39	7518301	42	7518325	45	7518349	48	7518373	50
7518278	40	7518302	43	7518326	46	7518350	48	7518374	50
7518279	40	7518303	43	7518327	46	7518351	48	7518375	50
7518280	40	7518304	43	7518328	46	7518352	48	7518376	50
7518281	40	7518305	43	7518329	46	7518353	48	7518377	50
7518282	40	7518306	43	7518330	46	7518354	48	7518378	50
7518283	40	7518307	43	7518331	46	7518355	48	7518379	50
7518284	40	7518308	43	7518332	46	7518356	48	7518380	51
7518285	40	7518309	43	7518333	46	7518357	48	7518381	51
7518286	40	7518310	44	7518334	47	7518358	48	7518382	51
7518287	40	7518311	44	7518335	47	7518359	48	7518383	51

* Applicable page number in table I, II, or III for design and identification data

Downloaded from http://www.everyspec.com

Table IV. Listing of Mil-Std Part Numbers in Numerical Sequence (Continued)

MIL-STD PART NUMBER	PAGE NO.*	MIL-STD PART NUMBER	PAGE NO.*	MIL-STD PART NUMBER	PAGE NO.*	MIL-STD PART NUMBER	PAGE NO.*	MIL-STD PART NUMBER	PAGE NO.*
A	B	A	B	A	B	A	B	A	B
7518384	51	7518408	53	7518432	55	7518456	58	7518480	60
7518385	51	7518409	53	7518433	55	7518457	58	7518481	60
7518386	52	7518410	53	7518434	56	7518458	58	7518482	61
7518387	52	7518411	53	7518435	56	7518459	58	7518483	61
7518388	52	7518412	54	7518436	56	7518460	58	7518484	61
7518389	52	7518413	54	7518437	56	7518461	58	7518485	61
7518390	52	7518414	54	7518438	56	7518462	59	7518486	61
7518391	52	7518415	54	7518439	56	7518463	59	7518487	61
7518392	52	7518416	54	7518440	56	7518464	59	7518488	61
7518393	52	7518417	54	7518441	56	7518465	59	7518489	61
7518394	52	7518418	54	7518442	56	7518466	59	7518490	62
7518395	52	7518419	54	7518443	56	7518467	59	7518491	62
7518396	52	7518420	54	7518444	57	7518468	59	7518492	62
7518397	52	7518421	54	7518445	57	7518469	59	7518493	62
7518398	52	7518422	54	7518446	57	7518470	60	7518494	62
7518399	52	7518423	54	7518447	57	7518471	60	7518495	62
7518400	52	7518424	54	7518448	57	7518472	60	7518496	62
7518401	52	7518425	54	7518449	57	7518473	60	7518497	62
7518402	53	7518426	54	7518450	58	7518474	60	7518498	62
7518403	53	7518427	54	7518451	58	7518475	60	7518499	62
7518404	53	7518428	54	7518452	58	7518476	60	7518500	62
7518405	53	7518429	54	7518453	58	7518477	60	7518501	62
7518406	53	7518430	55	7518454	58	7518478	60	7518502	63
7518407	53	7518431	55	7518455	58	7518479	60	7518503	63

* Applicable page number in table I, II, or III for design and identification data

Downloaded from http://www.everyspec.com

Table IV. Listing of Mil-Std Part Numbers in Numerical Sequence (Continued)

MIL-STD PART NUMBER	PAGE NO.*	MIL-STD PART NUMBER	PAGE NO.*	MIL-STD PART NUMBER	PAGE NO.*	MIL-STD PART NUMBER	PAGE NO.*	MIL-STD PART NUMBER	PAGE NO.*
A	B	A	B	A	B	A	B	A	B
7518504	63	7518528	66	7518552	69	7518576	72	7518600	73
7518505	63	7518529	66	7518553	69	7518577	72	7518601	73
7518506	63	7518530	66	7518554	69	7518578	72	7518602	74
7518507	63	7518531	66	7518555	69	7518579	72	7518603	74
7518508	63	7518532	66	7518556	70	7518580	72	7518604	74
7518509	63	7518533	66	7518557	70	7518581	72	7518605	74
7518510	64	7518534	67	7518558	70	7518582	72	7518606	74
7518511	64	7518535	67	7518559	70	7518583	72	7518607	74
7518512	64	7518536	67	7518560	70	7518584	72	7518608	74
7518513	64	7518537	67	7518561	70	7518585	72	7518609	74
7518514	64	7518538	68	7518562	71	7518586	72	7518610	74
7518515	64	7518539	68	7518563	71	7518587	72	7518611	74
7518516	64	7518540	68	7518564	71	7518588	73	7518612	74
7518517	64	7518541	68	7518565	71	7518589	73	7518613	74
7518518	64	7518542	68	7518566	71	7518590	73	7518614	74
7518519	64	7518543	68	7518567	71	7518591	73	7518615	74
7518520	64	7518544	68	7518568	71	7518592	73	7518616	74
7518521	64	7518545	68	7518569	71	7518593	73	7518617	74
7518522	65	7518546	69	7518570	71	7518594	73	7518618	74
7518523	65	7518547	69	7518571	71	7518595	73	7518619	74
7518524	65	7518548	69	7518572	71	7518596	73	7518620	74
7518525	65	7518549	69	7518573	71	7518597	73	7518621	74
7518526	66	7518550	69	7518574	72	7518598	73	7518622	75
7518527	66	7518551	69	7518575	72	7518599	73	7518623	75

* Applicable page number in table I, II, or III for design and identification data

Downloaded from http://www.everyspec.com

Table IV. Listing of Mil-Std Part Numbers in Numerical Sequence (Continued)

MIL STD PART NUMBER	PAGE NO.*	MIL-STD PART NUMBER	PAGE NO.*	MIL-STD PART NUMBER	PAGE NO.*	MIL-STD PART NUMBER	PAGE NO.*	MIL-STD PART NUMBER	PAGE NO.*
A	B	A	B	A	B	A	B	A	B
7518624	75	7518648	76	7518672	78				
7518625	75	7518649	76	7518673	78				
7518626	75	7518650	76	7518674	78				
7518627	75	7518651	76	7518675	78				
7518628	75	7518652	77	7518676	78				
7518629	75	7518653	77	7518677	78				
7518630	75	7518654	77	7518678	79				
7518631	75	7518655	77	7518679	79				
7518632	75	7518656	77	7518680	79				
7518633	75	7518657	77	7518681	79				
7518634	75	7518658	77	7518682	79				
7518635	75	7518659	77	7518683	79				
7518636	75	7518660	77	7518684	79				
7518637	75	7518661	77	7518685	79				
7518638	76	7518662	77	7518686	79				
7518639	76	7518663	77	7518687	79				
7518640	76	7518664	77	7518688	79				
7518641	76	7518665	77	7518689	79				
7518642	76	7518666	78						
7518643	76	7518667	78						
7518644	76	7518668	78						
7518645	76	7518669	78						
7518646	76	7518670	78						
7518647	76	7518671	78						

* Applicable page number in table I, II, or III for design and identification data

Downloaded from http://www.everyspec.com

Downloaded from http://www.everyspec.com

Notice: When Government drawings, specifications, or other data are used for any purpose other than in connection with a definitely related Government procurement operation, the United States Government thereby incurs no responsibility nor any obligation whatsoever; and the fact that the Government may have formulated, furnished, or in any way supplied the said drawings, specifications, or other data, is not to be regarded by implication or otherwise as in any manner licensing the holder or any other person or corporation, or conveying any rights or permission to manufacture, use, or sell any patented invention that may in any way be related thereto.

Copies of specifications, standards, drawings, and publications required by contractors in connection with specific procurement functions should be obtained from the procuring agency or as directed by the contracting officer.

Copies of this standard for military use may be obtained as indicated in the foreword to the DOD Index of Military Specifications and Standards.

Copies of this standard may be obtained for other than official use by individuals, firms, and contractors from the Superintendent of Documents, U. S. Government Printing Office, Washington 25, D. C.

Both the title and the identifying symbol number should be stipulated when requesting copies of military standards.

Custodians:
Army - MU
Navy - WEPS
Air Force - MAA

Preparing Activity
Army - MU

Downloaded from http://www.everyspec.com

INSTRUCTIONS: In a continuing effort to make our standardization documents better, the DoD provides this form for use in submitting comments and suggestions for improvements. All users of military standardization documents are invited to provide suggestions. This form may be detached, folded along the lines indicated, taped along the loose edge *(DO NOT STAPLE)*, and mailed. In block 5, be as specific as possible about particular problem areas such as wording which required interpretation, was too rigid, restrictive, loose, ambiguous, or was incompatible, and give proposed wording changes which would alleviate the problems. Enter in block 6 any remarks not related to a specific paragraph of the document. If block 7 is filled out, an acknowledgement will be mailed to you within 30 days to let you know that your comments were received and are being considered.

NOTE: This form may not be used to request copies of documents, nor to request waivers, deviations, or clarification of specification requirements on current contracts. Comments submitted on this form do not constitute or imply authorization to waive any portion of the referenced document*(s)* or to amend contractual requirements.

(Fold along this line)

(Fold along this line)

DEPARTMENT OF THE NAVY

NO POSTAGE NECESSARY IF MAILED IN THE UNITED STATES

OFFICIAL BUSINESS
PENALTY FOR PRIVATE USE $300

BUSINESS REPLY MAIL
FIRST CLASS PERMIT NO. 12503 WASHINGTON D. C.

POSTAGE WILL BE PAID BY THE DEPARTMENT OF THE NAVY

Commander
US Army Armement Research and Development Command
ATTN: DRDAR-TST-S
Dover, NJ 07801

Downloaded from http://www.everyspec.com

STANDARDIZATION DOCUMENT IMPROVEMENT PROPOSAL

(See Instructions – Reverse Side)

1. DOCUMENT NUMBER

2. DOCUMENT TITLE

3a. NAME OF SUBMITTING ORGANIZATION

b. ADDRESS *(Street, City, State, ZIP Code)*

4. TYPE OF ORGANIZATION *(Mark one)*

- ☐ VENDOR
- ☐ USER
- ☐ MANUFACTURER
- ☐ OTHER *(Specify)*: _____

5. PROBLEM AREAS

a. Paragraph Number and Wording:

b. Recommended Wording:

c. Reason/Rationale for Recommendation:

6. REMARKS

7a. NAME OF SUBMITTER *(Last, First, MI)* – Optional

b. WORK TELEPHONE NUMBER *(Include Area Code)* – Optional

c. MAILING ADDRESS *(Street, City, State, ZIP Code)* – Optional

8. DATE OF SUBMISSION *(YYMMDD)*

(TO DETACH THIS FORM, CUT ALONG THIS LINE.)

DD FORM 82 MAR 1426

PREVIOUS EDITION IS OBSOLETE.