Downloaded from http://www.everyspec.com

INCH-POUND
MIL-W-2902D(SH)
23 December 1988
SUPERSEDING
MIL-W-2902C(SHIPS)
24 September 1963
(See 6.5)

MILITARY SPECIFICATION

WIRE ROPE ASSEMBLIES, SINGLE LEG, OXYGEN BREATHING APPARATUS SAFETY LINE

This specification is approved for use by the Naval Sea Systems Command, Department of the Navy, and is available for use by all Departments and Agencies of the Department of Defense.

1. SCOPE

1.1 Scope. This specification covers a tending line between an oxygen breathing apparatus user and his tender.

1.2 Classification. Safety lines shall be of the following types, as specified (see 6.2):

Type I - Corrosion Resistant Steel
Type II - Phosphor bronze

1.2.1 Part numbers.

M2902 - 1
- 1 — type of cable material (see 1.2)
- M2902 — specification number

M2902 - 2
- 2 — type of cable material (see 1.2)
- M2902 — specification number

Beneficial comments (recommendations, additions, deletions) and any pertinent data which may be of use in improving this document should be addressed to: Commander, Naval Sea Systems Command, SEA 55Z3, Department of the Navy, Washington, DC 20362-5101 by using the self-addressed Standardization Document Improvement Proposal (DD Form 1426) appearing at the end of this document or by letter.

AMSC N/A FSC 4010

DISTRIBUTION STATEMENT A. Approved for public release; distribution is unlimited.

Downloaded from http://www.everyspec.com

2. APPLICABLE DOCUMENTS

2.1 Government documents.

2.1.1 Specifications and standards. The following specifications and standards form a part of this document to the extent specified herein. Unless otherwise specified, the issues of these documents are those listed in the issue of the Department of Defense Index of Specifications and Standards (DoDISS) and supplement thereto, cited in the solicitation (see 6.2).

SPECIFICATIONS

FEDERAL

RR-W-410 - Wire Rope and Strand.
PPP-F-320 - Fiberboard; Corrugated and Solid, Sheet Stock (Container Grade), and Cut Shapes.

MILITARY

MIL-P-116 - Preservation, Methods of.
MIL-L-19140 - Lumber and Plywood, Fire-Retardant Treated.

STANDARDS

MILITARY

MIL-STD-1186 - Cushioning, Anchoring, Bracing, Blocking and Waterproofing; With Appropriate Test Methods.
MIL-STD-2073-1 - DoD Materiel Procedures For Development and Application of Packaging Requirements.
AND10081 - Terminal Shank-Swaging, Dimensions for.

(Unless otherwise indicated, copies of federal and military specifications and standards are available from the Naval Publications and Forms Center, (ATTN: NPODS), 5801 Tabor Avenue, Philadelphia, PA 19120-5099.)

2.2 Non-Government publications. The following documents form a part of this document to the extent specified herein. Unless otherwise specified, the issues of the documents which are DoD adopted are those listed in the issue of the DoDISS cited in the solicitation. Unless otherwise specified, the issues of documents not listed in the DoDISS are the issues of the documents cited in the solicitation (see 6.2).

AMERICAN SOCIETY FOR TESTING AND MATERIALS (ASTM)

B 633 - Standard Specification for Electrodeposited Coatings of Zinc on Iron and Steel. (DoD adopted)
D 3951 - Standard Practice for Commercial Packaging. (DoD adopted)
D 4066 - Standard Specification for Nylon Injection and Extrusion Materials (PA). (DoD adopted)

(Application for copies should be addressed to the American Society for Testing and Materials, 1916 Race Street, Philadelphia, PA 19103.)

Downloaded from http://www.everyspec.com

AMERICAN SOCIETY OF MECHANICAL ENGINEERS (ASME)
B30.10 - Hooks.

(Application for copies should be addressed to the American Society of Mechanical Engineers, 345 East 47th Street, New York, NY 10017.)

(Non-Government standards and other publications are normally available from the organizations that prepare or distribute the documents. These documents also may be available in or through libraries or other informational services.)

2.3 Order of precedence. In the event of a conflict between the text of this document and the references cited herein, the text of this document takes precedence. Nothing in this document, however, supersedes applicable laws and regulations unless a specific exemption has been obtained.

3. REQUIREMENTS

3.1 Material. The material shall be as specified herein. Material not definitely specified shall be material for the purpose intended.

3.1.1 Recovered materials. Unless otherwise specified herein, all equipment, material, and articles incorporated in the products covered by this specification shall be new and may be fabricated using materials produced from recovered materials to the maximum extent practicable without jeopardizing the intended use. The term "recovered materials" means materials which have been collected or recovered from solid waste and reprocessed to become a source of raw materials, as opposed to virgin raw materials. None of the above shall be interpreted to mean that the use of used or rebuilt products is allowed under this specification unless otherwise specifically specified.

3.2 Assembly. The safety line shall be a 50-foot wire rope with a hook on each end. Each line shall have the following parts:

One wire rope (nylon covered)
Two hooks
Two keepers
Two keeper springs

3.2.1 Wire rope - nylon covered.

3.2.1.1 Type I, steel. Type I, corrosion resistant steel wire rope shall be 3/16-inch, 7 by 19 preformed cable, type VI, class 3 as specified in RR-W-410.

3.2.1.2 Type II, phosphor bronze. Type II, phosphor bronze wire rope shall be 3/16-inch, 7 by 19 preformed cable, type VI, class 3 as specified in RR-W-410.

3.2.1.2.1 Weight. The coated cable not including the hooks, shall weigh 7.4 $\pm$ 0.5 pounds per 100 feet.

3.2.1.2.2 Strength. The safety line completely assembled shall not show any permanent set in the hook, slippage of the wire in the swaged fitting, or damage to the wire rope when tested in accordance with 4.4.

Downloaded from http://www.everyspec.com

3.2.1.2.3 Diameter. The diameter of the coated cable shall not be less than that specified, but may exceed it by a maximum of 10 percent.

3.2.1.2.4 Nylon covering. The applied nylon covering shall be 1/32 inch thick and in accordance with ASTM D 4066.

3.2.1.2.5 Nylon finish. The nylon finish shall be concentric with the wire rope and shall be free of waviness, scratches, bubbles, grooves, cracks, checks, or inclusions.

3.2.2 Hooks. The hooks shall be in accordance with ASME B30.10 and figure 1. The hook with keeper installed shall be able to be slipped over a 1/2 inch rod and the keeper shall resume its normal closed position with the rod enclosed in the hook.

3.3 Assembly. Hooks shall be attached to each end of the wire rope by swaging. Swaging shall be in accordance with AND10081. Before swaging, the fitting shall be anchored to the cable with the cable end inserted to the full depth of the bore. Swaging shall be accomplished by uniformly cold-working the terminal shank until its dimensions conform to appropriate dimensions listed in AND10081. Forged steel hooks shall be zinc-plated before attachment to the wire rope. Dimensions of the hook before swaging shall be as shown on figure 1. After swaging, the shank-end of the hook shall not pinch the wire rope. The nylon shall be removed from the end of the wire rope for 4 $\pm$ 1/4 inches prior to swaging. The wire rope shall not be nicked or scratched in the process of removal.

3.4 Length. The length of each completed safety line with a hook fitted on each end and with the line fully extended shall be 50 feet plus or minus 2 inches, when measured with no tension in the line other than that required to keep the line taut.

3.5 Plating. Zinc-plating shall be in accordance with type II, service condition 4 (extra severe) of ASTM B 633.

4. QUALITY ASSURANCE PROVISIONS

4.1 Responsibility for inspection. Unless otherwise specified in the contract or purchase order, the contractor is responsible for the performance of all inspection requirements (examinations and tests) as specified herein. Except as otherwise specified in the contract or purchase order, the contractor may use his own or any other facilities suitable for the performance of the inspection requirements specified herein, unless disapproved by the Government. The Government reserves the right to perform any of the inspections set forth in the specification where such inspections are deemed necessary to ensure supplies and services conform to prescribed requirements.

4.1.1 Responsibility for compliance. All items shall meet all requirements of sections 3 and 5. The inspection set forth in this specification shall become a part of the contractor's overall inspection system or quality program. The absence of any inspection requirements in the specification shall not relieve the contractor of the responsibility of ensuring that all products or supplies submitted to the Government for acceptance comply with all requirements of the

Downloaded from http://www.everyspec.com

contract. Sampling inspection, as part of the manufacturing operations, is an acceptable practice to ascertain conformance to requirements, however, this does not authorize submission of known defective material, either indicated or actual, nor does it commit the Government to accept defective material.

4.2 Sampling of lots.

4.2.1 Sampling for hooks. For the purpose of sampling, a lot shall consist of not more than 2000 hooks offered, at one time, for assembly into safety lines.

4.2.1.1 Sampling for assemblies. For the purpose of sampling, a lot shall consist of all safety lines made from the lot of hooks specified in 4.2.1.

4.2.2 Sampling procedure. From each lot as defined in 4.2.1 and 4.2.1.1, samples shall be selected in accordance with table I.

TABLE I. Sampling plan.

Lot size	Sample size	Allowable defective units
2 to 15	2	0
16 to 25	3	0
26 to 90	5	0
91 to 150	8	0
151 to 280	13	0
281 to 500	20	0
501 to 1200	32	0
1201 to 2000	50	0

4.3 Inspection.

4.3.1 Hooks. The samples selected in accordance with 4.2.2 shall be subjected to surface inspection to determine compliance with the dimensions shown on figure 1, and to determine compliance with 3.2.2.

4.3.2 Assemblies. The samples selected in accordance with 4.2.2 shall be subjected to surface inspection to determine compliance with this specification. Particular attention shall be given to the effect on the zinc coating after the swaging operation and to the condition of the swaging.

4.4 Test.

4.4.1 Proof tests. Type I assemblies in each lot shall be strength tested to a tension of 1500 ± 20 pounds for a period of not less than 5 minutes and all type II assemblies shall be strength tested to a tension of 750 ± 10 pounds for a period of not less than 5 minutes before they are inspected in accordance with 4.3.2.

4.5 Inspection of packaging. Sample packages and packs, and the inspection of the preservation, packing and marking for shipment, stowage and storage shall be in accordance with the requirements of section 5 and the documents specified therein.

Downloaded from http://www.everyspec.com

5. PACKAGING

(The packaging requirements specified herein apply only for direct Government acquisition. For the extent of applicability of the packaging requirements of referenced documents listed in section 2, see 6.3.)

5.1 General.

5.1.1 Navy fire-retardant requirements.

5.1.1.1 Lumber and plywood. When specified (see 6.2), all lumber and plywood including laminated veneer material used in shipping container and pallet construction members, blocking, bracing and reinforcing shall be fire-retardant treated material conforming to MIL-L-19140 as follows:

Level A and B - Type II - weather resistant.
Category 1 - general use.
Level C - Type I - non-weather resistant.
Category 1 - general use.

5.1.1.2 Fiberboard. When specified (see 6.2), fiberboard used in the construction of class domestic, non-weather resistant fiberboard, and cleated fiberboard boxes, including interior packaging forms shall meet the requirements of PPP-F-320.

5.2 Preservation. Preservation shall be level A, C, or commercial, as specified (see 6.2).

5.2.1 Level A. Each wire rope assembly shall be unit protected in accordance with method III (physical and mechanical protection) of MIL-P-116. Each wire rope assembly shall be placed in a water-resistant folding, set-up or metal edged paperboard or fiberboard box meeting the unit container requirements of MIL-STD-2073-1, appendix F, at the contractor's option. Box closure shall be in accordance with the applicable box specification or appendix thereto. Closure of water-resistant fiberboard boxes shall be in accordance with method V.

5.2.2 Level C. Preservation shall be as specified for level A except that the unit containers shall be of the domestic, domestic fire-retardant, or non-weather resistant type, class or variety as applicable. Closure of domestic and domestic fire-retardant fiberboard boxes shall be by method I using pressure sensitive tape.

5.2.3 Commercial. Commercial packaging (cleaning, preservation, cushioning and the unit pack) shall be in accordance with ASTM D 3951.

5.3 Packing. Packing, when required (see 6.2), shall be level A, B, C, or commercial, as specified (see 6.2).

5.3.1 General requirements for levels A, B, and C. Containers selected (see 5.3.2) shall be of minimum weight and cube consistent with the protection required, of uniform size, and contain identical quantities.

Downloaded from http://www.everyspec.com

5.3.2 Levels A, B, and C containers. Wire rope assemblies, preserved as specified (see 5.2), shall be packed in exterior shipping containers in accordance with appendix C, table VII of MIL-STD-2073-1, for the level of packing specified (see 5.3). Unless otherwise specified (see 6.2), container selection including container options shall be the contractor's option.

5.3.2.1 Waterproofing. Unless otherwise specified (see 6.2) level A and when specified (see 6.2), level B shipping containers shall be provided with caseliners, linings, wraps or shrouds in accordance with the waterproofing requirements of MIL-STD-1186.

5.3.2.2 Closure and gross weight.

5.3.2.2.1 Closure. Container closure, reinforcing, or banding shall be in accordance with the applicable container specification or appendix thereto except that weather-resistant fiberboard boxes shall be closed in accordance with method V and reinforced with non-metallic or tape banding and domestic non-weather-resistant fiberboard boxes shall be closed in accordance with method I using pressure sensitive tape.

5.3.2.2.2 Weight. Wood, plywood, and cleated type containers exceeding 200 pounds gross weight shall be modified by the addition of skids in accordance with MIL-STD-2073-1 and the applicable container specification or appendix thereto.

5.3.3 Commercial. Wire rope assemblies, preserved as specified (see 5.2), shall be packed for shipment in accordance with ASTM D 3951 and herein.

5.3.3.1 Container modification. Shipping containers exceeding 200 pounds gross weight shall be provided with a minimum of two, 3- by 4-inch nominal wood skids laid flat, or a skid- or sill-type base which will support the material and facilitate handling by mechanical handling equipment during shipment, stowage and storage.

5.4 Palletized unit loads. When specified (see 6.2), containers shall be palletized in accordance with appendix F of MIL-STD-2073-1.

5.5 Marking.

5.5.1 Levels A, B, C, and commercial. In addition to any special marking required (see 6.2), and interior (unit) packs, shipping containers and palletized unit loads shall be marked for shipment, stowage, and storage in accordance with appendix F of MIL-STD-2073-1 and shall include bar coding.

6. NOTES

(This section contains information of a general or explanatory nature that may be helpful, but is not mandatory.)

6.1 Intended use. The intended use of the wire rope assemblies is to facilitate the rescue of an overcome firefighter wearing an oxygen breathing apparatus.

Downloaded from http://www.everyspec.com

6.2 Acquisition requirements. Acquisition documents must specify the following:

(a) Title, number, and date of this specification.
(b) Type required (see 1.2).
(c) Issue of DoDISS to be cited in the solicitation, and if required, the specific issue of individual documents referenced (see 2.1.1 and 2.2).
(d) When fire-retardant materials are required (see 5.1.1.1).
(e) When fiberboard boxes shall meet the requirements of PPP-F-320 (see 5.1.1.2).
(f) Level of preservation and level of packing required (see 5.2 and 5.3).
(g) Container selection if other than contractor's option (see 5.3.2).
(h) When caseliners are not required (see 5.3.2.1).
(i) Palletization (see 5.4).
(j) Special marking required (see 5.5.1).

6.3 Sub-contracted material and parts. The packaging requirements of referenced documents listed in section 2 do not apply when material and parts are acquired by the contractor for incorporation into the equipment and lose their separate identity when the equipment is shipped.

6.4 Subject term (key word) listing.

Cable
Hook
Keeper
Tending line

6.5 Changes from previous issue. Marginal notations are not used in this revision to identify changes with respect to the previous issue due to the extensiveness of the changes.

Preparing activity:
Navy - SH
(Project 4010-N034)

Downloaded from http://www.everyspec.com

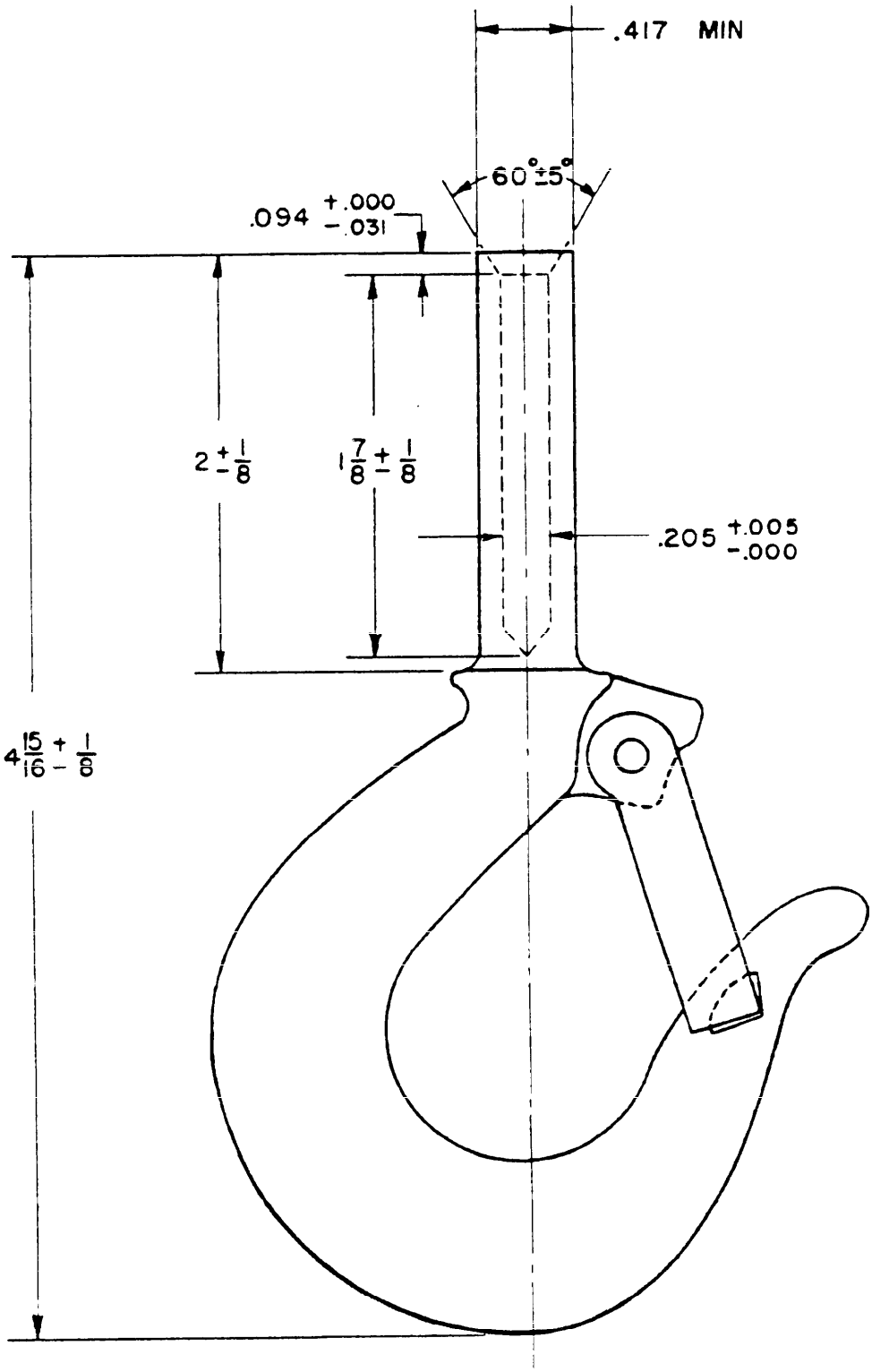

SH 5362

FIGURE 1. Drop-forged hook.

Downloaded from http://www.everyspec.com

STANDARDIZATION DOCUMENT IMPROVEMENT PROPOSAL

(See Instructions – Reverse Side)

1. DOCUMENT NUMBER	2. DOCUMENT TITLE
MIL-W-2902D(SH)	WIRE ROPE ASSEMBLIES, SINGLE LEG, OXYGEN BREATHING APPARATUS SAFETY LINE

3a. NAME OF SUBMITTING ORGANIZATION	4. TYPE OF ORGANIZATION *(Mark one)*
	☐ VENDOR
b. ADDRESS *(Street, City, State, ZIP Code)*	☐ USER
	☐ MANUFACTURER
	☐ OTHER *(Specify)*:

5. PROBLEM AREAS

a. Paragraph Number and Wording:

b. Recommended Wording:

c. Reason/Rationale for Recommendation:

6. REMARKS

7a. NAME OF SUBMITTER *(Last, First, MI)* – Optional	b. WORK TELEPHONE NUMBER *(Include Area Code)* – Optional
c. MAILING ADDRESS *(Street, City, State, ZIP Code)* – Optional	8. DATE OF SUBMISSION *(YYMMDD)*

(TO DETACH THIS FORM, CUT ALONG THIS LINE.)

DD FORM 82 MAR 1426 PREVIOUS EDITION IS OBSOLETE.

Downloaded from http://www.everyspec.com

INSTRUCTIONS: In a continuing effort to make our standardization documents better, the DoD provides this form for use in submitting comments and suggestions for improvements. All users of military standardization documents are invited to provide suggestions. This form may be detached, folded along the lines indicated, taped along the loose edge *(DO NOT STAPLE)*, and mailed. In block 5, be as specific as possible about particular problem areas such as wording which required interpretation, was too rigid, restrictive, loose, ambiguous, or was incompatible, and give proposed wording changes which would alleviate the problems. Enter in block 6 any remarks not related to a specific paragraph of the document. If block 7 is filled out, an acknowledgement will be mailed to you within 30 days to let you know that your comments were received and are being considered.

NOTE: This form may not be used to request copies of documents, nor to request waivers, deviations, or clarification of specification requirements on current contracts. Comments submitted on this form do not constitute or imply authorization to waive any portion of the referenced document*(s)* or to amend contractual requirements.

(Fold along this line)

(Fold along this line)

DEPARTMENT OF THE NAVY
COMMANDER
NAVAL SEA SYSTEMS COMMAND (SEA 5523)
DEPARTMENT OF THE NAVY
WASHINGTON, DC 20362-5101

OFFICIAL BUSINESS
PENALTY FOR PRIVATE USE $300

NO POSTAGE NECESSARY IF MAILED IN THE UNITED STATES

BUSINESS REPLY MAIL
FIRST CLASS PERMIT NO. 12503 WASHINGTON D C

POSTAGE WILL BE PAID BY THE DEPARTMENT OF THE NAVY

COMMANDER
NAVAL SEA SYSTEMS COMMAND (SEA 5523)
DEPARTMENT OF THE NAVY
WASHINGTON, DC 20362-5101