Downloaded from http://www.everyspec.com

MILITARY SPECIFICATION SHEET

(A) WIRE, ELECTRICAL, FLUOROPOLYMER-INSULATED, CROSSLINKED MODIFIED ETFE, LIGHTWEIGHT, SILVER-COATED COPPER, 200°C, 600 VOLT

This specification is approved for use by all Departments and Agencies of the Department of Defense.

The requirements for acquiring the wire described herein shall consist of this specification and the latest issue of MIL-W-22759.

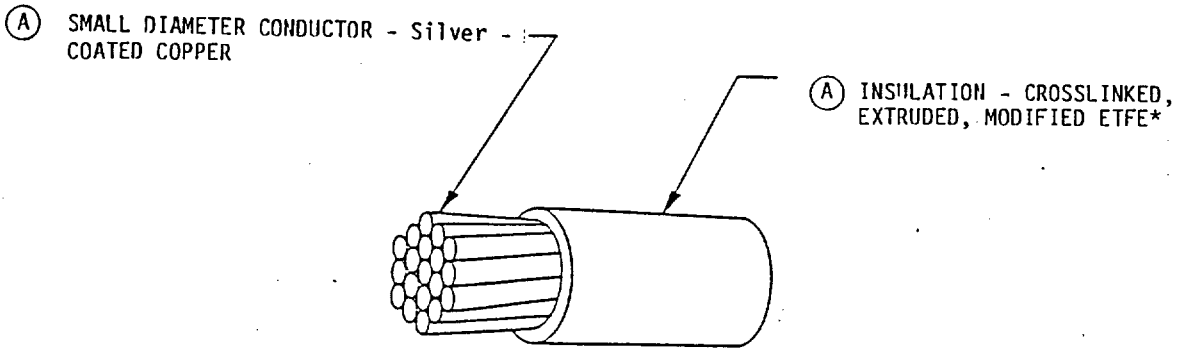

* ETFE - Ethylene-tetrafluoroethylene copolymer

FIGURE 1. General configuration.

TABLE I. Construction details.

Part no. 1/	Wire size	Stranding (number of strands x AWG gauge of strands)	Diameter of stranded conductor (inches) (min)	Diameter of stranded conductor (inches) (max)	Finished wire: Resistance at 20°C (68°F) (ohms/1000 ft) (max)	Finished wire: Diameter (inches)	Finished wire: Weight (lbs/1000 ft) (max)
(A) M22759/44-28-*	28	7 x 36	.014	.015	63.8	.027 ±.002	.91
M22759/44-26-*	26	19 x 38	.018	.019	38.4	.032 ±.002	1.4
M22759/44-24-*	24	19 x 36	.023	.025	24.3	.037 ±.002	2.0
M22759/44-22-*	22	19 x 34	.029	.030	15.1	.043 ±.002	2.8
M22759/44-20-*	20	19 x 32	.037	.039	9.19	.050 ±.002	4.3
M22759/44-18-*	18	19 x 30	.046	.048	5.79	.060 ±.002	6.5
M22759/44-16-*	16	19 x 29	.052	.054	4.52	.068 ±.002	8.3
M22759/44-14-*	14	19 x 27	.065	.068	2.88	.085 ±.003	13.0
M22759/44-12-*	12	37 x 28	.084	.087	1.90	.103 ±.003	19.7

1/ Part number: The asterisks in the part number column, tables I and II, shall be replaced by color code designators in accordance with MIL-STD-681. Examples: Size 20, white - M22759/44-20-9; white with orange stripe - M22759/44-20-93. Printing of color code designator on surface of wire insulation is not required.

(A) denotes changes

DISTRIBUTION STATEMENT A. Approved for public release; distribution is unlimited.

Downloaded from http://www.everyspec.com

TABLE II. Performance details.

Part no.	Bend testing			
	Mandrel diameter (inches) (±3%)		Test load (lbs) (±3%)	
	Crosslinking proof, immersion and life cycle tests	Cold bend test	Crosslinking proof, immersion and life cycle tests	Cold bend test
M22759/44-28-*	.250	.375	.125	.500
M22759/44-26-*	.375	.500	.125	.500
M22759/44-24-*	.375	.500	.250	1.00
M22759/44-22-*	.500	.750	.375	1.00
M22759/44-20-*	.500	.750	.500	1.00
M22759/44-18-*	.500	1.00	.500	1.00
M22759/44-16-*	.750	1.00	.750	1.00
M22759/44-14-*	1.00	1.50	1.00	3.00
M22759/44-12-*	1.50	2.00	1.50	3.00

RATINGS:

Temperature rating: 200°C (392°F) maximum continuous conductor temperature.
Voltage rating: 600 volts (rms) at sea level.

ADDITIONAL REQUIREMENTS:

Acid resistance: No requirement.
Blocking: 230°C ±3°C (446°F ±5.4°F).
Color: In accordance with MIL-STD-104, class 1; white preferred. Conformity of color to the limits of MIL-STD-104 shall not be required after crosslinking proof test or life cycle oven exposure.
Color striping or banding durability: 125 cycles (250 strokes) (min), 500 grams weight.
Crosslinking proof test: 7 hours at 300°C ±3°C (572°F ±5.4°F). Quality conformance test, group II. Requirements and procedures as for life cycle except for time and temperature.
Dielectric test after immersion: 2,500 volts (rms), 60 Hz.
Flammability: Quality conformance test, group II. For requirements and procedures see below.
Humidity resistance: After humidity exposure, wire shall meet the requirements for initial insulation resistance.
Identification of product: Not required for size 24 and smaller. Color code designator not required.
Identification durability: 125 cycles (250 strokes) (min), 500 grams weight.
Immersion: For procedure see below.
Impulse dielectric test: 8.0 kilovolts (peak), 100 percent test.
Insulation resistance, initial: 5,000 megohms for 1,000 feet (min).
Insulation thickness: 0.005 inch (min).
Life cycle: 500 hours at 230°C ±3°C (446°F ±5.4°F). Dielectric test, 2,500 volts (rms), 60 Hz. Procedure to use mandrels coated with polytetrafluoroethylene in the form of either enamel or wrapped tape, such that the diameter of the mandrels, after coating, still conform to the requirements of performance details, table II.
Low temperature (cold bend):
Bend temperature, -65°C ±3°C (-85°F ±5.4°F).
Dielectric test, 2,500 volts (rms), 60 Hz.
Physical properties of insulation: Pulled at 2 inches per minute.
Tensile strength, 5,000 lbf/in^2 (min).
Elongation, 75 percent (min).
Propellant resistance: No dielectric breakdown. For procedure see below.
Shrinkage: 0.125 inch (max) at 230°C ±3°C (446°F ±5.4°F).
Smoke: 250°C ±5°C (482°F ±9°F); no visible smoke.
(A) Solderability: All conductors shall be tested in accordance with MIL-STD-202, method 208 without steam aging.
Spark test of primary insulation: Not applicable.
Surface resistance: 500 megohms - inches (min), initial and final readings.
Thermal shock resistance:
Oven temperature, 200°C ±3°C (392°F ±5.4°F).
Maximum change in measurement, 0.060 inch.

Downloaded from http://www.everyspec.com

TABLE III. Immersion test fluids.

	Test fluid	Test temperature	Immersion time
a	MIL-L-23699, Lubricating Oil, Aircraft Turbine Engine, Synthetic Base	48°C to 50°C (118°F to 122°F)	20 hours
b	MIL-H-5606, Hydraulic Fluid, Petroleum Base, Aircraft, Missile, and Ordnance	48°C to 50°C (118°F to 122°F)	20 hours
c	TT-I-735, Isopropyl Alcohol	20°C to 25°C (68°F to 77°F)	168 hours
d	MIL-T-5624, Turbine Fuel, Aviation, Grade JP-4	20°C to 25°C (68°F to 77°F)	168 hours
e	MIL-A-8243, Anti-Icing and Deicing-Defrosting Fluid, undiluted	48°C to 50°C (118°F to 122°F)	20 hours
f	MIL-A-8243, Anti-Icing and Deicing-Defrosting Fluid, diluted 60/40 (fluid/water) ratio	48°C to 50°C (118°F to 122°F)	20 hours
g	MIL-C-43616, Cleaning Compound, Aircraft Surface	48°C to 50°C (118°F to 122°F)	20 hours
h	TT-M-268, Methyl Isobutyl Ketone (For Use in Organic Coatings)	20°C to 25°C (68°F to 77°F)	168 hours
i	SAE-AS-1241, Fire Resistant Hydraulic Fluid for Aircraft	48°C to 50°C (118°F to 122°F)	20 hours
j	MIL-L-7808, Lubricating Oil, Aircraft Turbine Engine, Synthetic Base	118°C to 121°C (244°F to 250°F)	30 minutes
k	MIL-C-25769, Cleaning Compound, Aircraft Surface, Alkaline Waterbase, undiluted	63°C to 68°C (145°F to 154°F)	20 hours
l	MIL-C-25769, Cleaning Compound, Aircraft Surface, Alkaline Waterbase, diluted 25/75 (fluid/water) ratio	63°C to 68°C (145°F to 154°F)	20 hours
m	TT-S-735, Standard Test Fluids; Hydrocarbon, Type I	20°C to 25°C (68°F to 77°F)	168 hours
n	TT-S-735, Standard Test Fluids; Hydrocarbon, Type II	20°C to 25°C (68°F to 77°F)	168 hours
o	TT-S-735, Standard Test Fluids; Hydrocarbon, Type III	20°C to 25°C (68°F to 77°F)	168 hours
p	TT-S-735, Standard Test Fluids; Hydrocarbon, Type VII	20°C to 25°C (68°F to 77°F)	168 hours
q	Dielectric-coolant fluid, synthetic silicate ester base, Monsanto Coolanol 25 or equivalent	20°C to 25°C (68°F to 77°F)	168 hours
r	MIL-T-81533, 1,1,1 Trichloroethane (Methyl Chloroform) Inhibited, Vapor Degreasing	20°C to 25°C (68°F to 77°F)	168 hours
s	Azeotrope of trichlorotrifluoroethane and methylene chloride, Dupont Freon TMC or equivalent	20°C to 25°C (68°F to 77°F)	168 hours
t	MIL-G-3056, Gasoline, Automotive, Combat	20°C to 25°C (68°F to 77°F)	168 hours

Downloaded from http://www.everyspec.com

Wicking: Not applicable.
Wire length requirements: Schedule B.
Wrap test:
Wrap back test.
Oven temperature, 313°C ±3°C (595°F ±5.4°F).

Flammability requirements and procedure:

The flammability test of MIL-W-22759 shall be modified for the wire of this specification sheet as follows: The specified test burner shall be used without the wing top flame spreader and shall be adjusted to furnish a 3-inch conical flame with an inner cone approximately 1 inch in height and a temperature of 955°C ±30°C (1751°F ±54°F) at its hottest point. A sheet of facial tissue conforming to UU-T-450 shall be suspended taut and horizontal 9-1/2 inches below the marked point on the wire specimen in the test chamber and at least 1/2 inch above the floor of the chamber. The period of application of the hot flame tip to the marked point on the wire specimen shall be 30 seconds for all sizes of wire. Observations shall include time of burning after removal of the test flame, final distance of flame travel on the wire above the test mark, and presence or absence of flame in the facial tissue due to incendiary drip from the specimen. Requirements shall be:

Duration of after-flame	3 seconds (max)
Flame travel	3.0 inches (max)
No flaming of tissue	

Breaking of the wire specimen in size 24 or smaller shall not be considered as failure provided the requirements for duration of flame, final distance of flame travel, and absence of incendiary dripping are met.

One specimen shall be tested from each sample unit. The post-flame dielectric test of MIL-W-22759 is not required for wire of this specification sheet.

Immersion procedure:

A 24-inch specimen, for each test fluid in table III, shall have its diameter measured and shall then be immersed to within 6 inches of each end for the time and temperature specified. During immersion, the radius of bend of the wire shall be not less than 14 nor more than 35 times the specified maximum diameter of the wire under test. Upon removal from the test fluid, the specimen shall be wiped dry and then remain for 1 hour in free air at room temperature. The diameter shall be measured and compared to the initial diameter. The insulation shall be removed for a distance of 1/2 inch from each end of the specimen. The specimen shall then be subjected to the bend test and dielectric test specified in the procedure for life cycle testing.

Propellant resistance procedure: (Initial qualification test only)

Specimens of finished wire, 24 inches long, shall be immersed to within 1-1/2 inches of each end in the following propellants for the specified time at normal room temperature, using a separate specimen for each propellant.

	Propellant	Immersion time
a.	MIL-P-26536, Propellant, Hydrazine	30 minutes
b.	MIL-P-26539, Propellant, Nitrogen Tetroxide	1 minute
c.	MIL-P-27402, Propellant, Hydrazine - Uns-Dimethylhydrazine (50 percent N_2H_4 - 50 percent UDMH)	30 minutes

During immersion, the radius of bend of the wire shall be not less than 14 nor more than 35 times the specified maximum diameter of the wire under test. Upon removal from the liquids, the specimens shall remain for no more than 48 hours in free air at room temperature. The insulation shall be removed for a distance of 1 inch from each end of the specimens, and the specimens shall be subjected to the dielectric test specified for life cycle testing.

Qualifying activity: The activity responsible for the qualified products covered by this specification sheet is Naval Avionics Center, Code B/714, 6000 East 21st Street, Indianapolis, IN 46219-2189.

Downloaded from http://www.everyspec.com

CONCLUDING MATERIAL

Custodians:
Army - AV
Navy - AS
Air Force - 85

Review activities:
Army - CR, MI
(A) Air Force - 11, 19, 70, 99
DLA - ES, IS

User activities:
Navy - EC, OS, SH

Preparing activity:
Air Force - 85

Agent:
DLA - ES

(Project 6145-1103-08)