MIL-W-15154E
1 DECEMBER 1965
SUPERSEDING
MIL-W-15154D
19 AUGUST 1964
MIL-W-17445(SHIPS)
24 JANUARY 1956

MILITARY SPECIFICATION

WOOD LAMINATES, OAK (FOR SHIP AND BOAT USE)

This specification is mandatory for use by all Department and Agencies of the Department of Defense.

1. SCOPE

1.1 Scope. This specification covers laminated oak members for ship and boat use. Such material is suitable for use as straight and curved structural members in small craft, patrol craft, minesweepers, other wooden vessels, and for other applications where structural oak laminates with fully waterproof durable adhesive bonds are desired.

1.2 Classification. Laminates shall be of the following types, and classes, and shall be composed of one or more of the following lamination grades (see 6.1.1):

Grade (strength quality):

Grade AA

Grade A

Grade B

Grade C

Grade D

Type (orientation of annual rings):

Type 1—Mixed grain.

Type 2—Flat grain.

Type 3—Edge grain.

Class (durability):

Class 1—High decay resistance.

Class 2—Good decay resistance.

Class 3—Moderate decay resistance.

2. APPLICABLE DOCUMENTS

2.1 The following documents of the issue in effect on date of invitation for bids or request for proposal, form a part of the specification to the extent specified herein:

SPECIFICATIONS

FEDERAL

TT-P-320 — Pigment, Aluminum; Powder and Paste, For Paint.

FSC 5510

TT-W-535 — Wood Preservative; Fluor- Chrome-Arsenate-Phenol Mixture.

MILITARY

MIL-V-1174 — Varnish, Spar, Water Resisting (Formula No. 80).

MIL-W-19463 — Wood; Moisture Content Determination.

MIL-W-18142 — Wood Preservative Solutions; Oil Soluble; Ship and Boat Use.

MIL-A-22397 — Adhesive, Phenol and Resorcinol Resin Base (for Marine Service Use).

MIL-L-24126 — Conditions Controlled to Prevent Surface Checking.

STANDARD

MILITARY

MIL-STD-105 — Sampling Procedures and Tables for Inspection by Attributes.

(Copies of specifications, standards, and drawings required by supplier in connection with specific procurement functions should be obtained from the procuring activity or as directed by the contracting officer.)

2.2 Other publications. The following documents form a part of this specification to the extent specified herein. Unless otherwise indicated, the issue in effect on date of invitation for bids or request for proposal shall apply.

AMERICAN SOCIETY FOR TESTING MATERIALS

ASTM D 245-64T — Methods for Establishing Structural Grades of Lumber.

(Copies may be obtained from the American Society for Testing and Materials 1916 Race Street, Philadelphia, Pennsylvania 19103.)

AMERICAN WOOD PRESERVER'S ASSOCIATION (AWPA) PUBLICATIONS

A2—Methods for Analysis of Water-Borne Preservatives and Fire Retardant Formulations.

A3—Methods for Determining Penetration of Preservatives.

A7—Standard Wet Ashing Procedure for Preparing Wood for Chemical Analysis.

(Copies may be obtained from the Secretary-Treasurer of the American Wood Preserver's Association 839 17th Street, N.W., Washington, D.C. 20006.)

U.S. DEPARTMENT OF COMMERCE

Commercial Standard CS 253—Structural Glued Laminated Timber.

(Application for copies should be addressed to the Superintendent of Documents, Government Printing Office, Washington, D.C. 20402.)

ASSOCIATION OF AMERICAN RAILROADS

Rules Governing the Loading of Forest Products on Open Top Cars.

(Application for copies should be addressed to the Association of American Railroads, 59 Van Buren Street, Chicago, Ill. 60605.)

(Technical society and technical association specifications and standards are generally available for reference from libraries. They are also distributed among technical groups and using Federal agencies.)

3. REQUIREMENTS

3.1 Prior to award of contract or order, when a manufacturer has not produced oak laminates within the past 24 months conforming to this specification for the class specified, and species or combination to be used, shall be submitted certifying the following (see 6.9):

(a) Tests on laminates produced show conformance with the performance requirements of this specification for the class specified or species combination to be used, as evidenced by an identified report (see 3.6).

(b) The manufacturer is equipped to continue to produce material of quality equal to that tested, in the amount of the order and within the delivery date as evidenced by plant facilities, manpower and quality control capability (see 4.1.1). Appendix A of MIL-W-24126 shall be used as a guide to determine the adequacy of the facilities and personnel producing laminates under this specification. Evidence of conformance under CS 253 may be offered for review in fulfillment of these requirements subject to the requirements of this specification.

3.2 **Lamination quality.** Oak laminations used in laminated assemblies shall be one piece for length and width. Edge-joints and end joints may be used to form laminations of the required dimensions. Laminations (includes edge-glued and end-glued components) used in laminated assemblies shall be free from splits, surface checks over 1/32-inch wide or over 4-inches long, ring shake, honeycomb, collapse, case-hardening, or oversteaming (see 4.5.2), wane, decay in any stage, and other defects except as permitted herein.

3.2.1 *Moisture content.* The moisture content of the lumber at the time of gluing shall be not less than 10 nor more than 16 percent. The moisture content of the core as determined by a distribution section (see figure 1) taken from any boards shall not vary from that of the shell by more than 2 percent.

3.2.2 *Grade of lumber.* Grades and maximum allowable defects shall be in accordance with the table I, 3.2.2.1, 3.2.2.2 and 3.2.2.3 (see 6.2). For laminates intended for remanufacture into smaller cross-sections, defect limitations shall apply to end use in dimensions.

TABLE I. *Permissible slope of grain, knots, and equivalent knot defects for lamination grades.*

Lamination grade	Maximum slope of grain expressed as one inch rise in inches of length	Maximum sum of diameters of knots and equivalent knot defects per foot of lamination length, expressed as percentage strength ratio (see 3.2.2).
Grade AA	1 in 18	85
Grade A	1 in 15	72
Grade B	1 in 12	65
Grade C	1 in 10	55
Grade D	1 in 8	50

Note: Defect limitations apply to finished laminate width. Defect size for 7 inch width (actual) shall be maximum permitted regardless of width over 7 inches.

3.2.2.1 *Slope of grain.* When measured as specified in 4.5.3, slope of grain along the length of any face or edge of a lamination shall not be steeper than the maximum slope specified in table I for the applicable grade.

3.2.2.2 *Knots and equivalent knot defects.* The sum of diameters of knots and equivalent knot defects per linear foot of lamination of finished width shall not exceed the diameter of a single knot permitted for each applicable strength ratio in tables II and IV of ASTM D245–64T (strength ratios for joists and planks for knots on edges and faces within middle third of length). The indicated knot sizes shall apply to the full length of faces and edges.

3.2.2.2.1 *Knots.* All knots shall be sound. Knot clusters are not permissible. Intergrown knots containing checks will be equivalent to a sound tight knot of the same size. All knots appearing on edge surfaces, and on face surfaces of laminations less than 3 inches wide shall be tight. In laminations 3 inches in width and wider, knots on the face surface larger than ⅜ inch in diameter, shall be tight. The diameter of knots shall be determined as specified in 4.5.4.

3.2.2.2.2 *Burls.* Burls shall be considered as equivalent knot defects of the same size.

3.2.2.2.3 *Holes.* Holes are not permissible on edge surfaces, and face surfaces less than 3 inches wide. In laminations 3 inches and wider, knot holes and holes due to mechanical damage averaging ⅜ inch and less in diameter appearing on face surface shall be considered the same as a sound tight knot of the same size. Holes greater than ⅜ inch in diameter are not permissible in any location.

3.2.2.2.4 *Bark pockets.* Equivalent knot defect values for bark pockets are specified in table II.

TABLE II. *Equivalent knot defect values for bark pockets.*

Bark pocket		Equivalent knot defect	
Width	Length	Flat-grain laminations	Edge-grain laminations
(Inch)	(Inches)	(Inch)	(Inch)
1/16	3		
1/8	2	¼	⅛
1/8	4		
1/4	2	⅜	¼
1/8	8		
1/4	4	½	⅜
3/16	6		
3/8	4	⅝	½

3.2.2.3 *Bird pecks and worm holes.* Permissible bird pecks and worm holes are specified in table III. Wood surrounding these defects shall be free of discoloration, softness, or other evidence of decay.

TABLE III. *Permissible bird pecks and worm holes.*

Grade AA	Will permit scattered wormholes not exceeding 1/16 inch in diameter, provided that no two wormholes are spaced closer together than 9 inches.
Grade A	Will permit scattered ¼ inch bird pecks (average diameter) and scattered 1/16 inch wormholes (average diameter), provided that no two wormholes, bird pecks, or a combination of both are spaced closer than 6 inches. Groups of three 1/16 inch wormholes will be permitted, provided that no wormhole in the group is spaced closer than 6 inches to any scattered bird pecks or wormhole, and that the groups are not spaced closer than 24 inches when measured along the length of the piece.
Grade B	Permissible bird pecks and worm holes are as specified herein for grade A laminates except that ⅛ inch single worm holes and 1/16 inch worm holes in groups of three spaced not less than 18 inches apart.
Grade C	Permissible bird pecks and worm holes are as specified herein for grade A laminates except than ⅜ inch bird pecks and ⅛ inch single worm holes and in groups of three spaced not less than 18 inches apart.
Grade D	Permissible bird pecks and worm holes are as specified herein for grade C laminates except that groups of three worm holes not less than 12 inches apart will be permitted.

3.2.3 *Type (orientation of annual rings) (see 6.1.3 and 6.2).*

3.2.3.1 *Type 1 (mixed grain).* Laminates shall contain either flat grain or edge grain, or both and individual lamination components may contain both flat and edge-grain.

3.2.3.2 *Type 2 (flat grain).* The annual growth rings in laminations and lamination components shall be so oriented that tangent lines to the annual growth rings form an angle of less than 45 degrees with the wide surface of the piece.

3.2.3.3 *Type 3 (edge grain).* The annual growth rings in laminations and lamination components shall be so oriented that tangent lines to the annual rings form an angle of more than 45 degrees with the wide surface of the piece.

3.2.4 *Class (see 6.1.4 and 6.2).*

3.2.4.1 *Class 1 (high decay resistance).* Laminations shall be as follows:

(a) Red oak, treated in accordance with 3.2.4.1.1 through 3.2.4.1.4; or

(b) White oak, containing bright sapwood on not less than 75 percent of the area of any face or edge in any two feet of length, treated in accordance with 3.2.4.1.1 through 3.2.4.1.4.

3.2.4.1.1 *Preparation for treatment.* The lumber before treatment shall be seasoned to a moisture content of not more than 25 percent for proper impregnation with preservative, and shall be dressed uniformly on both sides. The thickness after surfacing shall be such that when laminations are surfaced for laminating after treatment and drying, the amount of treated wood removed from each face shall be as small as practicable.

3.2.4.1.2 *Preservative material (fluorchrome-arsenate-phenol mixture).* The preservative chemicals shall conform to either type A or B of TT-W-535. The treating solution shall be of a concentration suitable to

produce a retention of 0.50 pound of dry salt per cubic foot of wood in the white oak sapwood portion and in the red oak heartwood and sapwood.

3.2.4.1.3 *Treatment.* The treatment shall be any method which does not use pressure higher than 1500 pounds per square inch (p.s.i.) or a temperature higher than 140° Fahrenheit (F.), and provides 100 percent penetration of preservative in the white oak sapwood and penetration of 80 percent of the annual rings in red oak heartwood and sapwood (see 4.4.1.3). Incising of the lumber is not permitted. Dry salt retention shall be not less than 0.50 pounds per cubic foot of wood, in the treated zone of samples (see 4.5.7.1).

3.2.4.1.4 *Conditioning of lumber after treatment.* Lumber shall be dried to the required moisture content by either air drying or kiln drying, using temperatures less than 150°F. and relative humidity controlled as necessary to prevent drying defects.

3.2.4.2 *Class 2 (good decay resistance).* White oak laminations shall be free of sapwood. Untreated red oak is not permitted. Red oak or white oak sapwood is permitted if treated as specified in 3.2.4.1.

3.2.4.3 *Class 3 (moderate decay resistance).* White oak laminations shall contain bright sapwood on not more than 25 percent of the area of any face or edge, in any two feet of length. Untreated red oak is not permitted. Red oak or unlimited white oak sapwood is permitted if treated as specified in 3.2.4.1.

3.3 Adhesives. Adhesives used for all gluing operations shall conform to MIL–A–22397.

3.4 Construction. A laminate shall consist of layers of laminations joined together by the adhesive specified in 3.3 in accordance with the process requirements of 3.5. White oak and treated red oak are permitted in the same laminate, provided data is presented showing conformance to the performance requirements of this specification (see 3.1).

3.4.1 *Lamination thickness.* All laminations in a given laminate shall be approximately the same thickness. The maximum lamination thickness for straight laminates shall be ⅞ inch after final surfacing. The maximum permissible lamination thickness for curved laminates shall be computed from the relationship:

$$\frac{\text{Thickness}}{\text{Radius of curvature}} = \frac{1}{100} = .01$$

When bending laminations to curved forms, breakage of any lamination, failure of any end-joint, or observance of compression wrinkles, splitting, splintering or other indications of bending damage, shall result in rejection of the laminate unless the damaged lamination is replaced by a sound one within the assembly time of the adhesive used.

3.4.2 *Arrangement of end joints.* Laminated assemblies may contain end joints in individual laminations of the design specified in 3.5.1.2. End joint spacing within the laminate shall meet one of the following arrangements as specified (see 6.1.5 and 6.2).

Arrangement 1—Spacing of adjacent end joint tips at a glueline shall be not less than 6 inches. Any plane at right angles to the longitudinal axis of the laminate that intersects an end joint shall not intersect any part of an end joint in the adjacent lamination to either side. Any 6-inch long section of the finished laminate shall not contain more end joints than ¼ of the total number of laminations in the 6-inch section.

Arrangement 2—Spacing of adjacent end joint tips at a glueline within the outer

¼ of the total depth of the laminate shall not be less than 6 inches; within the center ½ of the total depth the spacing shall be not less than 2 inches. Any plane at right angles to the longitudinal axis of the laminate that intersects an end joint shall not intersect any part of an end joint in the adjacent lamination to either side.

3.4.3 *Finished dimensions.* Laminated oak members shall be manufactured to full dimensions required by the procuring activity and shall conform to the pattern lines as determined from templates or drawings furnished (see 6.2).

3.5 Process requirements. Edge-gluing of lumber components to produce laminations of required width and end-gluing of lumber components to form laminations of required length shall procede final surfacing and gluing of laminations except for laminations wider than 18 inches, one edge joint may be glued at the time of laminating. All other joints shall be pre-glued.

3.5.1 *Machining of surfaces to be bonded.*

3.5.1.1 *Edge-surfaces.* Strips of oak to be edge-glued for lamination width shall have a minimum width of 1½ inches at the time of fabrication. Strips to be edge glued shall be machined to produce a uniform flat (without tongue and groove, or similar construction) and true surface with a minimum of damage to wood fibers.

3.5.1.2 *End-surfaces.* End-joining of lumber components for length shall use a plain flat scarf-joint with a slope not steeper than one inch rise in 12 inches of length.

3.5.1.3 *Surfacing laminations.* Laminations shall be dressed to a uniform thickness throughout, and the total thickness variation of any lamination at the time of gluing shall not exceed a maximum of 0.01 inch, as determined with an accurate thickness gage. Surfaces shall not show manufacturing defects to an extent which will prevent sufficient contact between gluing surfaces for complete adhesion. Surfaces shall not be sanded to remove such defects after final surfacing. At the time of gluing, after all surfacing, cup shall not exceed 1/32 inch for each inch in width in lumber ½ inch and less in thickness, and shall not exceed 1/64 inch for each inch in width for lumber over ½ inch in thickness. The final surfaces for gluing shall be prepared not more than 24 hours before gluing is started.

3.5.2 *Adhesive spread.* The adhesive shall be applied uniformly to both contact faces. The amount of adhesive spread per unit area shall be in accordance with the adhesive manufacturer's instruction for the particular adhesive being used.

3.5.3 *Assembly.* At the time of gluing, the temperature of lumber materials and ambient air temperature shall be 75° ± 15°F. The surfaces to be bonded shall be free of oil, dirt, crayon marks, and other foreign material which may interfere with bonding of the adhesive.

3.5.4 *Clamping.* Application of pressure to glue lines shall be accomplished within the assembly period limitations required for the particular adhesive used. Cauls, clamps, and clamp spacing shall be adequate so as to uniformly apply and hold a glue line pressure of 175 ± 25 p.s.i. throughout the cure. During initial application of pressure, clamps shall be loose enough to allow slippage of material into proper position. During application of final pressure, clamping procedure shall be such as to allow glued surfaces to be forced into intimate contact of all points.

3.5.4.1 *Edge-joints.* Bearing surfaces on clamps, and clamp spacing shall be such as to apply and hold required pressure without damage to material.

3.5.4.2 *End-joints.* Clamping procedure shall not cause splitting of feathered edges or other material damage which will affect the strength of the end-joint.

3.5.4.3 *Laminate assemblies.* All laminate assemblies shall be provided with top and bottom cauls of oak or equally hard and strong materials of such thickness, which in conjunction with suitable clamps and clamp spacing, will provide the required glue line pressure uniformly, and which will not result in damage to the laminate material. Clamps with equalizing pressure heads or equally effective pressing equipment shall be uniformly spaced to develop pressure as specified at all points. Spacing of the clamps or units will vary with the number and thickness of the cauls used and the pressure required. In straight or curved members, clamping shall begin at any one point and proceed progressively toward the ends.

3.5.5 *Curing.* In the curing process, a glue line temperature of not less than 150°F. shall be maintained for the time period specified by the adhesive manufacturer for the particular approved adhesive. The chamber temperature shall not exceed 215°F. for untreated lumber and 170°F. for 60 minutes for preservative treated lumber. The curing temperature shall be determined at the innermost glue line with an accurate potentiometer and thermocouples, while assemblies are under full clamp pressure. Where assemblies are large, or where more than one assembly is cured in the same curing chamber a sufficient number of determinations shall be made to assure that glue line temperatures are being met throughout the curing chamber.

3.5.5.1 *Edge-joints and end-joints.* During the curing operation, temperature and relative humidity controls shall be maintained in such a manner that all applicable requirements of 3.2 and 3.6 are met throughout the lamination length.

3.5.5.2 *Laminate assemblies.* A dry kiln or equally effective curing chamber shall be provided with adequate controls for uniformly maintaining the temperature and humidity conditions required in the curing process. If clamped assemblies are to be moved into a separate curing chamber for the curing process, they shall not be removed from the laminating jig, and the portable jig shall be rigid enough to prevent shifting of the assembly in the jig. Clamped assemblies shall be placed in the curing chamber before the temperature in the chamber reaches 100°F. The curing period shall commence when the innermost glue line temperature reaches the temperature required for the particular approved adhesive, and shall continue for the required curing period. The laminate shall then be cooled under humidity conditions controlled to prevent surface checking.

3.6 Performance requirements.

3.6.1 *Moisture content of finished laminate.* The finished material shall have a moisture content not less than 10 percent nor more than 16 percent (see 4.5.1).

3.6.2 *Block shear (see 4.5.5).* The average block shear strength between laminations shall be not less than 1800 p.s.i. with at least 75 percent wood failure when tested as specified in 4.4.4.2. No individual glue line shall have a shear strength less than 1200 p.s.i., unless additional block shear tests conducted on that glue line prove the deficiency to be local.

3.6.3 *Resistance to delamination.* The maximum permissible delaminations shall be as specified in 3.6.3.1, 3.6.3.2 and 3.6.3.3 (see 4.5.6).

3.6.3.1 *Between laminations.* Delamination between laminations shall either not exceed 5 percent at the end of the second cycle or 10 percent at the end of the third cycle.

3.6.3.2 *Edge-joints.* Where a single edge-joint appears in a test specimen, delamination shall either not exceed 15 percent at the end of the second cycle, or 20 percent at the end of the third cycle.

Where two or more edge-joints appear in a specimen, average delamination shall either not exceed 10 percent at the end of the second cycle, or 15 percent at the end of the third cycle.

3.6.3.3 *End-joints.* Delamination in end-joints shall either not exceed 5 percent at the end of the second cycle, or 10 percent at the end of the third cycle. Delamination limits apply to individual end-joints.

3.6.4 *End-joint bending resistance.* The extreme fiber stress obtained in the bending test of end joints shall average not less than 8915 p.s.i. time the strength ratio for the grade (see table I). All values shall exceed 5100 p.s.i. times the strength ratio for the grade (see table I). When a laminator has not produced end joints for 12 months and testing in accordance with 4.3.1.1 is required, 95 percent of the values shall exceed 6690 p.s.i. times the strength ratio for the grade. End joints shall have not less that 75 percent wood failure except that joints with wood failure value not less than 60 percent and the fiber stress is equal to or greater than the average required for the grade may be considered as meeting the requirements of this specification.

3.7 Finished laminate. Finished laminates shall show no signs of opening up at the glue line, or damaged fibers from improper use of cauls and clamps.

3.8 Coatings.

3.8.1 *Preservative treatment.* After machining, laminated assemblies shall be coated on ends and sides with one coat of preservative solution conforming to type A or B of MIL–W–18142. The preservative shall be allowed to dry before applying paint.

3.8.2 *End coating.* The ends of the laminated oak assemblies shall be painted with two coats of aluminum or mica paint after the preservative has dried for at least 24 hours. Aluminum paint shall consist of 2 pounds of aluminum paste, conforming to type II, class B of TT–P–320, and 1 gallon of phenolic varnish, conforming to MIL–V–1174. A drying interval of 24 hours shall elapse before applying a second coat. An alternate coating may be any suitable commercial end coating which is satisfactory to the bureau or agency concerned.

3.8.3 *Side coating.* When specified (see 6.2 and 6.8) and after preservative required by 3.8.1 has dried, the sides of the laminated oak shall be painted with two coats of aluminum paint as specified in 3.8.2.

3.9 Marking. When specified (see 6.2), each member shall be marked to identify the intended use.

4. QUALITY ASSURANCE PROVISIONS

4.1 Responsibility for inspection. Unless otherwise specified in the contract or purchase order, the supplier is responsible for the performance of all inspection requirements as specified herein. Except as otherwise specified, the supplier may utilize his own facilities or any commercial laboratory acceptable to the Government. The Government reserves the right to perform any of the inspections set forth in the specification where such inspections are deemed necessary to assure supplies and services conform to prescribed requirements.

4.1.1 *Supplier quality control system.* The supplier shall provide and maintain a quality control system acceptable to the Government for the supplies covered by this specification.

4.1.2 *Inspection verification.* All quality control operations performed by the contractor shall be subject to verification at unscheduled intervals. Verification shall consist of, (a) surveillance of the operations to determine whether the practices, methods, and procedures are being properly applied, and (b) product inspection to

measure quality of product offered for acceptance. Instances of poor practices which might have an affect upon the quality of the product shall be immediately called to the attention of the contractor. Failure of the contractor to promptly correct deficiencies discovered shall be cause for suspension of acceptance until correction has been made or until conformance of the product to the prescribed acceptance criteria of this specification has been demonstrated. To minimize interference with operations, the contractor will designate a responsible official or officials to whom the inspector will report such instances, and who will alert the inspector of action taken to correct production difficulties which occur. Repeated failures to meet specification requirements will result in cancellation of the contract or order.

4.2 **Inspection lot.**

4.2.1 *Lamination components.* All components or pieces prior to end-joining shall be considered a lot.

4.2.2 *Laminations.* A lot shall consist of all laminations submitted for inspection at the same time.

4.2.3 *Laminate.* A lot shall consist of all laminates submitted for inspection at the same time, which are manufactured for approximately the same end use using a single lot of adhesive, and are fabricated under proximately the same end use using a single process conditions as determined by process inspection.

4.3 **Sampling for examination and tests.** For the sampling specified in 4.3.1 through 4.3.4 the "single sampling plan" of MIL–STD–105 is applicable.

4.3.1 *Sampling for examination and test of laminations or lamination components.* For the examinations and tests specified in 4.4.1, laminations (or components prior to end-joining where specified) shall be sampled on an unbiased random basis in accordance with table IV and MIL–STD–105. Where applicable, the same sample may be utilized in inspecting for more than one defect.

TABLE IV. *Sampling levels for examination and test for various lamination or component defects, corresponding acceptable quality levels, and basis for acceptance or rejection.*

Requirement	Inspection level	Acceptable Quality Level for lot acceptance (percent)	Basis for rejection of lot
Orientation of annual rings (flat or edge-grain) (see 3.2.3)	I — Laminations or I — Lamination components prior to bonding	1.5	a. Number of laminations with predominately the wrong grain exceeds acceptance number. a. Number of pieces with predominately the wrong grain exceeds acceptance number.
Knot defects (see 3.2.2.2)	I	4.0 next lower grade or exceeding maximum knot diameter allowed for applicable grade.	a. Laminations fall below next lower grade (strength ratio of 40 percent for grade D). b. The number of laminations which have knot defects which fall within the next lower grade or, in excess of maximum knot

TABLE IV. *Sampling levels for examination and test for various lamination or component defects, corresponding acceptable quality levels, and basis for acceptance or rejection* — (Continued).

Requirement	Inspection level	Acceptable Quality Level for lot acceptance (percent)	Basis for rejection of lot
			diameter allowed, exceeds the acceptable number.
Excess cross grain (see 3.2.2.1)	I	4.0 within next lower grade	a. Any lamination contains cross grain which falls below the next lower grade (slope of 1 in 6 for grade D). b. The number of laminations which have cross grain falling within the next lower grade. exceeds the acceptance number.
Bird peck and wormholes (see 3.2.2.3)	I	4.0 within next lower grade	a. Any lamination falls below next lower grade (grade D, over 50 larger or 50 percent more frequent than requirement). b. Number of laminations falling within next lower grade exceed acceptance number.
Class (see 3.2.4)			
Class 1	I	2.5—Preservative treatment	a. The number of laminations which do not meet the required class requirement, exceeds the acceptance number. (Individual laminations which do not meet the class requirement shall be subject to rejection.)
		6.5—White oak heartwood limit	b. For white oak heartwood, any lamination exceeds 50 percent heartwood on any face or edge in any two feet of length.
Class 2	I	2.5—Preservative treated or untreated	a. The number of laminations which do not meet the required class requirement, exceeds the acceptance number. (Individual laminations which do not meet the class requirements shall be subject to rejection.) b. If untreated, any lamination exceeds 25 percent sapwood, on any face or edge, in any two feet, or is red oak.

TABLE IV. *Sampling levels for examination and test for various lamination or component defects, corresponding acceptable quality levels, and basis for acceptance or rejection* — (Continued).

Requirement	Inspection level	Acceptable Quality Level for lot acceptance (percent)	Basis for rejection of lot
Class 3	I	2.5—Preservative treated or untreated	a. The number of laminations which do not meet the required class requirement, exceeds the acceptance number. (Individual laminations which do not meet the class requirement shall be subject to rejection. b. If untreated, any lamination exceeds 50 percent sapwood, on any face or edge, in any two feet, or is red oak.
Edge-joints (see 3.5.1.1)	I — examination only	6.5 wood strips too narrow	a. Any lamination shows a defective edge-joint glue line. b. The number of laminations which show strips too narrow exceeds the acceptance number.
End-joints	I — examination only	None	Any lamination contains end-joints with too steep slope, or visually defective bonds, or contains wood at the end-joint which is charred, split, or otherwise damaged to the extent which will cause loss in strength.
Other nonpermissible lamination defects	I	None	Any lamination contains one or more of the following or any other defect which affects strength, durability, or glueability. (1) Soft or incipient decay in any amount. (2) Soft, or oozing gum. (3) Honeycomb, or collapse. (4) Splits. (5) Oils, crayon marks, wax, etc. on surfaces to be bonded.
Casehardening (see 3.2)	S-3—lamination components prior to end-joining (see 4.5.2)	4.0 casehardened or over steamed	The number of laminations which are casehardened or oversteamed exceeds the quality acceptance number. (Individual laminations or components which are case-hardened or oversteamed shall be rejected.)

TABLE IV. *Sampling levels for examination and test for various lamination or component defects, corresponding acceptable quality levels, and basis for acceptance or rejection* — (Continued).

Requirement	Inspection level	Acceptable Quality Level for lot acceptance (percent)	Basis for rejection of lot
Moisture content (see 3.2.1)	S–3—(see 4.5.1)	6.5 for moisture content up to two percent outside limitations	a. Any lamination has components which are more than 2 percent outside required limitations. b. Number of laminations which have components with moisture up to two percent outside moisture content limits exceeds the quality acceptance number.
Surface checks (see 3.2)	I	4.0	The number of laminations which do not meet the requirements of 3.2 exceed the acceptance number.

4.3.1.1 *Sampling for test of end-joints.* When a laminator has not produced wood laminates with end-joints conforming to this specification for the previous 12 months, fourteen end-joints shall be fabricated in accordance with regular production procedure. Seven end-joints shall be prepared and tested for resistance to delamination as specified in 4.4.1.1. The remaining seven shall be tested for resistance to bending in accordance with 4.4.1.2. When a laminator has produced wood laminates in the previous 12 months, and the end-joints have met specification requirements, samples from each day's production of end-joints, shall be randomly selected in accordance with table V for the bend test of 4.4.1.2. Each production week throughout the period of production, an end-joint shall be selected from a regular production lamination for test in cyclic delamination as specified in 4.4.1.1. Laminations for end-joint tests should be selected before final surfacing for the laminated assembly to permit use of pieces remaining after removal of end-joint test specimens.

TABLE V. *Sampling for end-joint bend tests*

Sampling level		
Reduced sampling	Normal sampling	Increased sampling
If for each of the 3 preceding consecutive days' production, the average of all bend tests is not less than 6690X (strength ratio for the grade) p.s.i. fiber stress and 75 percent wood failure.		If 1 or more end-joints in each of the 2 preceding days' gluing fails either part of the bend test requirements.

TABLE V. *Sampling for end-joint bend tests*—Continued

Sampling level		
Reduced sampling	Normal sampling	Increased sampling
Less than 1000 joints, sample size = 2. More than 1000 joints, sample size = 3.	S-1	S-3

4.3.2 *Sampling for use of suitable adhesive, adhesive use, process and facilities.* A systematic and effective quality control procedure shall be maintained by the laminator to provide an effective and accurate examination as outlined in 4.4.2. Examination shall be made as deemed necessary by the inspector but not less than once per week.

4.3.3 *Sampling for examination of finished laminates.* Sampling for the examination specified in 4.4.3 shall be in accordance with inspection level II of MIL-STD-105. The Acceptable Quality Level for minor defects, such as dimension slightly off, slight material degrade due to curing, or mechanical damage during manufacture shall be 6.5 percent defective.

4.3.4 *Sampling for test of finished laminates.* Sampling for test of finished laminates shall be in accordance with 4.3.4.1, 4.3.4.2 or 4.3.4.3, as applicable.

4.3.4.1 *No previous production experience.* When a laminator who has not previously produced marine laminates conforming to this specification is beginning production, specimens for test shall be selected from each member, until five consecutively produced members have passed all requirements of this specification. Thereafter, samples shall be selected for test in accordance with inspection level III of MIL-STD-105 until fifteen consecutively tested major members, such as frames and stems, have met the requirements. Thereafter, members shall be sampled in accordance with 4.3.4.2.

4.3.4.2 *Continued production.* When a laminator has met the prerequisites in 4.3.4.1, laminates shall be selected for moisture content, block shear and cyclic delamination tests on an unbiased random basis in accordance with tables VI and VII (column headed "Normal sampling") and MIL-STD-105. The acceptable quality level for moisture content shall be AQL = 4.0 percent defective. Sampling shall shift from "normal" to "reduced" or "increased" sampling when the criteria specified under these column headings in tables VI and VII are met.

4.3.4.3 *Lapse in production.* When a laminator has not produced laminates conforming to this specification for a period of 12 months, specimens for test shall be selected from each member, until five consecutively produced members have passed all requirements of this specification. Thereafter samples shall be selected for test in accordance with 4.3.4.2.

4.4 Quality conformance examination and tests.

4.4.1 *Examination and test of laminations.* Laminations (or components) selected in accordance with 4.3.1 shall be examined and tested to determine conformance with the applicable requirement. Ac-

ceptance or rejection of lamination (or component) lots shall be in accordance with table IV. Where edge-joints are used to form lamination for width, edge-joint mating surfaces shall be examined for slope of grain requirement prior to edge-gluing. End-joints shall be tested in accordance with 4.4.1.1 and 4.4.1.2. Examination and test for preservative retention and penetration shall be in accordance with 4.4.1.3.

TABLE VI. *Sampling for moisture content and block shear tests.*[1]

Member	Sampling level		
	Reduced sampling	Normal sampling	Increased sampling
	Moisture content, shear strength and percent wood failure requirements consistently met in all laminates tested in 5 preceding consecutive lots.		One or more laminates in each of the 2 preceding consecutive lots failed to meet moisture content or at least one part of the shear requirement.
All members directly exposed to salt water or severe exterior exposure — (stems, keels, skegs, keelsons, horn timbers, garboards, bilge keels, masts, etc.)	S-3	S-4	III
All interior members not directly exposed to salt water (except filler blocks).	S-2	S-3	II
Filler blocks	S-1	S-2	I

[1] Moisture content and block shear are separate requirements to be considered independently when shifting to "reduced" or "increased" sampling.

TABLE VII. *Sampling for cyclic delamination tests.*

Member	Sampling level		
	Reduced sampling	Normal sampling	Increased sampling
	Percent delamination requirement met in all laminates tested in 3 preceding consecutive lots and the combined average delamination for these laminates is below 5 percent delamination at end of second cycle.		One or more laminates in each of the 2 preceding consecutive lots failed to meet percent delamination requirement for third cycle.
All members directly exposed to salt water (stems, keels, keelsons, skegs, horn timbers, garboards, bilge keels, etc.)	S-3	S-4	III
All interior members not directly exposed to salt water (except filler blocks)	S-1	S-2	I
Interior filler blocks	None	None	None

4.4.1.1 *Test of end-joints for resistance to delamination.* When an end-joint sample is selected for test as specified in 4.3.1.1, a 15-inch section of lamination shall be cut so that the centerline of the end-joint is at the center of the section. The section shall be laminated as the center lamination of a test beam with four other laminations of the same width, thickness, and length under conditions representative of regular production. The specimen shall be tested as specified in 4.5.6. Failure of 2 consecutive end-joints to meet the requirement of 3.6.3.3 shall be basis for rejection of material containing end-joints until test results are presented which indicate that the laminator can, on a production basis, fabricate at least seven consecutive end-joints meeting the requirements of 3.6.3.3.

4.4.1.2 *Test of end-joints for resistance to bending.* From laminations selected daily in accordance with 4.3.1.1, test specimens shall be cut containing the production end-joint in the center of the length as shown in figure 2. Test specimens shall be not wider than 7 inches (actual size). For laminations wider than 7 inches, the test specimens shall be cut lengthwise into 2 or more pieces of equal width. Test specimens shall be surfaced on both faces to the thickness of the laminations to be used in final

assembly. All specimens shall be tested in accordance with 4.5.8 and the extreme fiber stress calculated as shown by 4.5.8.1. The extreme fiber stress obtained for each shall be not less than specified in 3.6.4. All specimens shall be included in the calculation of average fiber stress. Wood failure in the end-joint shall be evaluated and shall conform to the requirements of 3.6.4. Failure of any end-joints in each of 3 consecutive days to meet the requirements of 3.6.4 shall be basis for rejection of material containing end-joints until test results are presented which indicate that the laminator can on a production basis fabricate end-joints which meet the requirements of 3.6.4.

4.4.1.3 *Examination and test for preservative (treated laminations only).* From each sample board, lamination component or lamination shall be selected in accordance with table IV. A 0.2 inch diameter boring shall be taken so that the boring extends through the sapwood and the deepest section of heartwood (see class 1) or through the deepest section of white oak sapwood (see class 2). Boring shall be taken at least 20 inches from the end of each board. The boring shall be examined and tested in accordance with 4.5.7.1, for preservative penetration. One-half of the sample borings shall be analysed for retention (see 4.5.7.2). If desired by the laminator, full cross-sections may be substituted for borings for the examinations and tests specified in 4.5.7.1 and 4.5.7.2 (see figure 1).

4.4.2 *Examination for use of suitable adhesive, adhesive use, process and facilities.* In accordance with the procedure specified in 4.3.2, examination shall be made to determine use of suitable adhesive, adhesive use requirements, process requirements, proper calibration, performance, and use of facilities. Failure to use suitable adhesive will result in rejection of any lot involved. Failure to conform to adhesive use requirements, process requirements, proper calibration, performance and use of facilities will result in immediate temporary rejection of lots until the difficulty has been diagnosed and corrected. Acceptability of involved laminates shall be based on results of the inspector's diagnosis as to seriousness. Failure to take effective corrective action shall result in rejection of subsequent lots. Repeated failure to adhere to the general laminating requirements herein shall require that production be stopped until corrective action is taken.

4.4.3 *Examination of finished laminates.* Each of the sample laminates selected in accordance with 4.3.3 shall be examined to determine conformance with the requirements of the specification for visual and dimensional examination. If any laminate in the sample does not conform to requirements for lamination thickness, end-joint spacing, deviates considerably from required dimensions or shape, or has visually defective adhesive bonds, it shall be subject to rejection, and individual examination shall be made of each laminate in the lot. All laminates with one or more of these major defects shall be subject to rejection. (Members which show defective adhesive bonds shall be subject to rejection even though specimens taken from the ends of that member passed the requirements of 3.6.) Also, if the total number of laminates in the sample with one or more minor defects exceeds the acceptance level listed in 4.3.3, this shall be cause for rejection of the lot represented by the sample.

4.4.4 *Tests of finished laminates.*

4.4.4.1 *Moisture content.* Moisture content of finished laminates shall be determined in accordance with 4.5.1. If the number of laminates not meeting the moisture content requirements of 3.6.1 exceed the acceptance level listed in 4.3.4.2, this shall be cause for rejection of the lot represented by the sample.

4.4.4.2 *Block shear test of interlamination glue line.* Each of the sample laminates selected in accordance with 4.3.4 shall be

tested for block shear in accordance with 4.5.5. Failure of any sample laminate to conform to the requirements of 3.6.2 shall place the lot in temporary rejected status pending an additional test of each glueline of the sample laminates that failed. Failure of any sample laminates based on the average of the first and second tests shall result in rejection of the lot, and every laminate of the lot shall be tested individually in accordance with 4.5.5. A second test will be permitted on each glueline on any of these individual laminates which fail to conform to 3.6.2 on the first test. Laminates which fail to meet 3.6.2 based on the average of the first and second tests shall be subject to rejection. The rejection of three lots in succession for failure to conform to 3.6.2 shall require that the manufacturer develop test information which shows that the difficulty has been diagnosed and corrected, the requirements can be met, and the quality control system has been corrected to effectively screen out defective laminates.

4.4.4.3 *Cyclic delamination test.* Sample laminates for cyclic delamination tests selected in accordance with 4.3.4 shall be tested in accordance with 4.5.6. Failure of any of the sample laminates to conform to all of the requirements of 3.6.3.1 and 3.6.3.2 shall be basis for rejection of the lot involved, and every laminate in the lot shall be tested individually. All individual laminates not meeting the requirements of 3.6.3.1, 3.6.3.2 shall be subject to rejection. The rejection of any laminates in 3 lots in succession for failure to conform with 3.6.3.1 shall require that the manufacturer present test information which indicates that the difficulty has been diagnosed and corrected, and the requirements can be met. Failure of 3 consecutive edge-joint samples to meet the requirements of 3.6.3.2 shall be basis for rejection of material containing edge-joints until the manufacturer presents test information which indicates that requirements can be met.

4.5 **Test methods.**

4.5.1 *Moisture content.* Moisture content in lumber, laminations or laminates shall be determined using an accurate moisture meter or oven test in accordance with MIL–W–19463. If a moisture meter is used, it shall be capable of determining moisture content at the shell and core. Moisture content of untreated wood shall be determined by either the oven-dry test or the moisture meter test. Moisture content, of wood containing Fluor-Chrome-Arsenate-Phenol (FCAP), shall be determined by the oven-dry test. For the oven-dry test of lumber or laminations specimens shall be prepared in accordance with figures 1a and 1b. For the oven-dry test of finished laminates, specimens shall be prepared in accordance with 4.5.1.1.

4.5.1.1 *Specimen preparation for oven-dry test of finished laminates.* Prepare two specimens each ½-inch wide and approximately 2-inches long measured along the grain, full depth of the laminate. One specimen shall be located adjacent to the centerline of the laminate and one specimen at the edge of the laminate. The sample material used for the block shear test may be utilized for the moisture content specimen.

4.5.2 *Casehardening.* Casehardening shall be determined in accordance with figure 1e.

4.5.3 *Slope of grain measurement.* Slope of grain shall be measured on faces and edges of laminations. Where edge-joints or end-joints are used, slope of grain on mating surfaces shall be measured prior to assembly. Slope of grain measured on a given face or edge is considered as the general slope of grain along that length of face or edge. This disregards normal local variations around permissible knots, knot holes, and other acceptable imperfections. This also disregards other local slope of grain variations which may have been caused by such defects as knots which originally occurred in the trimmed-off portion of the board, provided these areas are not more

than 8 inches in length, are not more than twice as steep as the permissible general slope of grain, and that these areas are not spaced closer than 4 feet along the length of the piece.

4.5.4 *Measurement of knots or holes.* The diameter of knots or holes shall be determined by averaging the distance between lines drawn parallel and perpendicular to the edges of the piece and tangent to the knot or hole being measured.

4.5.5 *Block shear test.*

4.5.5.1 *Test specimens.* Adhesive lines in a given sample shall be clearly marked with ink in arabic numerals. Adhesive lines shall then be sampled for test on an unbiased random basis in accordance with sampling level II of MIL-STD-105, and test specimens prepared. The remainder of the material shall be retained for testing of other glue lines, if necessary, as defined in 4.5.5.3. The test specimens shall be cut as shown on figure 3 and may conform to either A or B so that the grain direction is parallel to the direction of loading during test. Care shall be taken in preparing the test specimen to make the loading surfaces smooth and parallel to each other and perpendicular to the height. When sawing the bonded assembly, care shall be exercised to insure that the saw cuts extend to, but not beyond, the adhesive line. The width and height of the specimen at the adhesive line shall be measured to the nearest 0.01 inch to determine the shear area.

4.5.5.2 *Apparatus.* The testing machine shall be fitted with a compression shearing tool containing a self-aligning seat to insure uniform lateral distribution of the load. The shearing tool shown on figure 4 has been found satisfactory. For range of loads encountered in test, indicated loads shall be accurate within ± 2.5 percent of true values as determined by standard procedures for verification of testing machine. Increments of load on the indicating device shall be in easily readable divisions between 1 and 2.5 percent of the value of loads encountered when test specimens break. The load indicating device shall include damping apparatus which permit reading of ultimate loads under conditions of sudden failure. Provisions should be included for a fairly uniform rate of loading to failure. The load shall be applied with a continuous motion of the movable head to a maximum load at a rate of 0.025 inch per minute with a permissible variation of ± 25 percent.

4.5.5.3 *Procedure.* The test specimen shall be placed in the shearing tool so that the load may be applied as specified in 4.5.5.2. The loading shall continue until failure. The shear stress at failure shall be calculated in pounds per square inch, by dividing load at failure by the area of the adhesive line area between the two laminations measured to the nearest 0.01 square inch. Also the percent wood failure for each adhesive line shall be estimated to the nearest 5 percent. The average percent wood failure and shear strength shall be calculated for each specimen. If either the average percent wood failure or shear strength fail to meet the requirements of 3.6.2, the remainder of the adhesive lines in the test specimen shall be prepared and tested, and a new average for shear strength and percent wood failure shall be computed which includes all adhesive lines in the test specimen.

4.5.6 *Cyclical delamination test.*

4.5.6.1 *Test specimen.* Specimens for cyclical exposure test shall be 3 inches in length in the direction of the grain and full cross section of the laminate. When an end-joint appears in the cyclical exposure test specimen, it shall be located so that it appears equally on both exposure faces.

4.5.6.2 *Test procedure.*

4.5.6.2.1 *Vacuum pressure cycle.* The specimens specified in 4.5.6.1 shall be placed

in an autoclave, weighted down, and water at a temperature of 65° to 80°F. shall be admitted into the autoclave in quantity sufficient to submerge the specimens completely. Thereafter, a vacuum of 20 to 25 inches of mercury shall be drawn and held for 2 hours. The vacuum shall then be broken, and a pressure of 80 + 5 p.s.i. shall be applied to the submerged specimens and held for 2 hours. The pressure shall then be released and a vacuum of 20 to 25 inches of mercury shall again be drawn and held for 2 hours while the specimens remain submerged. The vacuum shall be released again and a pressure of 80 +5 p.s.i. applied to the submerged specimens and held for 2 hours. (Elapsed time 8 hours, 40 minutes, including load, unload and place in dryer.)

4.5.6.2.2 *Drying period.* The specimens shall be dried for a period of 88 hours (3-2/3 days) in air at 80 to 85°F. and 25 to 30 percent relative humidity, and circulating at the rate of 500 ± 50 feet per minute. During the drying the specimens shall be placed at least 2 inches apart and with the end surfaces parallel to the stream of air.

4.5.6.2.3 *Duration of test.* The soaking and drying periods specified in 4.5.6.2.1 and 4.5.6.2.2 shall be repeated once, for a total of 2 cycles of wetting and drying, at the end of which period delamination shall be measured in accordance with 4.5.6.2.4. If the second cycle test requirements of 3.6.3 are met, the test shall be discontinued. However, if any of the second cycle requirements of 3.6.3 are not met, the soaking and drying cycle shall be repeated once more for a total of 3 cycles of soaking and drying, comprising a total test period of 12 days, and delamination again measured.

4.5.6.2.4 *Measurement of delamination.* At the end of the soaking and drying cycle prescribed in 4.5.6.2.3, the total length of each type of glue line (interlamination, edge-joint, scarf-joint) shall be measured to the nearest 0.05 inch on both end grain surfaces of the exposure test specimen. Also, the total length of delamination in each type of glue line shall be measured on both end-grain surfaces. Delamination is a term used to express separation of wood surfaces at the glue lines. When the separation is in the wood, even though very close to the glue line, it is termed wood failure or checking. Magnification is often necessary to determine whether the failure is in the glue or wood. A feeler gage, 0.004 inch in thickness is convenient for probing into the glue line to determine if separation actually exists.

4.5.6.2.5 *Calculations.* Calculations shall be based on delamination measured on end-grain surfaces of test specimens. Percent delamination shall be calculated as follows:

(a) Delamination in interlamination glue lines:

$$\text{Percent delamination} = \frac{\text{Total length of delamination in interlamination glue lines}}{\text{Total length of interlamination glue line}} \times 100$$

(b) *Delamination in edge-joints*:

$$\text{Percent delamination} = \frac{\text{Total length of delamination in edge-joint glue lines}}{\text{Total length of edge-joint glue lines}} \times 100$$

(c) *Delamination in scarf-joints*:

$$\text{Percent delamination} = \frac{\text{Total length of delamination in scarf-joint glue lines}}{\text{Total length of scarf-joint glue lines}} \times 100$$

4.5.7 *Determination of preservative penetration and retention (class 1).*

4.5.7.1 *Preservative penetration.* One cross-section from each sample shall be examined for extent of preservative penetration specified by 3.2.4.1.3. Where doubt exists as to penetration, chemicals in accordance with AWPA A3, method 1, may be used as an aid.

4.5.7.2 *Preservative retention.* One cross-section from each sample specified in 4.4.1 shall be used. For white oak the entire sapwood of each cross-section shall be separated from the heartwood. For red oak the entire cross-section shall be used. The sapwood portions of white oak or full cross-sections for red oak shall be composited, and the composite analyzed by an accurate and recognized assay method. AWPA Standard A7 followed by Standard A2 are satisfactory to determine conformance to requirements of 3.2.4.1.2.

4.5.8 *End-joint bending test.* The specimen, prepared as described in 4.4.1.2, shall be supported flat (not edge-wise) at each end. Two point symetrical loading shall be applied at least 2 inches outside the tips of the end-joint as shown by figure 2. The distance between each end reaction and its nearest load point shall be not less than 7 times the thickness of the specimen or more than 10 times the thickness. The accuracy of applied loads, the increments of load on the load indicating device, the damping apparatus which permits reading of maximum load under conditions of sudden failure and continuous uniform rate of loading shall be in accordance with the applicable portions of 4.5.5.2. The loading shall be applied until the maximum load is reached and then continued until the load supported by the specimen is not more than 10 percent of the maximum load developed.

4.5.8.1 *Calculations.* The extreme fiber stress in bending, based on maximum load developed, shall be calculated as follows:

$$F = \frac{3Pa}{wd^2}, \text{ where}$$

F = Extreme fiber stress in bending, p.s.i.

P = Maximum load, pounds.

a = The distance between the end reaction and the nearest load point, inches.

w = Width of specimen, inches.

d = Depth of specimen, inches.

4.6 Examination for preparation for delivery. Laminates which are shipped shall be inspected to verify conformance to the requirements of section 5 herein.

5. PREPARATION FOR DELIVERY

5.1 Domestic shipment and early use.

5.1.1 *Wood laminates.*

5.1.1.1 *Packaging.* Laminated frame members shall be bundled in pairs or other suitable grouping, and each member within the bundle shall be suitably marked (see 3.9). Smaller laminated members should be bundled, when practicable. Bundles shall be secured by means of steel strapping. No screws, bolts, or spikes shall be inserted

into the members for packaging and packing purposes. All members of the bundle shall be protected against cutting by the strapping by use of strips of plywood, metal, fiberboard or other protective material placed between the bundle members and the strapping. The packaging shall be sufficient to afford adequate protection against deterioration and physical damage during shipment from the supply source to the using activity and until early use.

5.1.1.2 *Packing.* Packing shall be accomplished in a manner which will insure acceptance by carrier and will afford protection aaginst physical damage during handling and direct shipment from the supply source to the using activity for early use. The wood laminates shall be shipped in open or closed cars according to size of the individual member. When loaded in open cars (gondola and flat car) loading shall be in strict accordance with Section 5 of the Association of American Railroads "Rules Governing the Loading of Forest Products on Open Top Cars". The wood laminates, coated as specified (see 3.8), shall be covered with waterproof paper or other suitable weather resistant material. When loaded in closed freight cars or covered vans, material shall be loaded in accordance with the methods recommended in Pamphlet No. 20 of the Association of American Railroads or other carrier regulations applicable to the mode of transportation.

5.1.1.3 *Marking.* In addition to any special marking required (see 6.2), shipment marking information shall be provided in accordance with the contractors commercial practice. The information shall include nomenclature, grade, type, class, contract or order number, and contractor's name and address.

6. NOTES

6.1 Intended use. Oak laminates covered by this specification are suitable for marine use and for other severe exterior exposure, except exposure to marine organisms. The adhesive bonds have high strength, have extreme resistance to salt water and shrinkage and swelling, and have long time durability.

6.1.1 *Laminate grade.* No grade of laminate is defined in this specification. It is intended that procuring activities order laminates composed of combinations of one or more of the lamination grades, based on structural requirements involved.

6.1.2 *Grade of laminations.* The lamination grades developed for this specification are such that they should be readily available. However, the lower quality material is more readily available and less costly than the higher grades. Where permissible by strength requirements, weight limitations, and other design factors, the lower grades should be used where feasible. Oak boards are generally manufactured and stocked in random widths therefore, edge gluing is usually desirable to prevent excessive waste.

6.1.3 *Laminate type.*

(a) *Mixed grain.* A general purpose, economical type for use where repeated wetting and drying will not occur. Cyclic wetting tends to cause excessive distortion due to mixed grain.

(b) *Flat grain.* A general purpose, readily available type, suitable for most applications.

(c) *Vertical grain.* A more expensive, special type for use where wearing surface is important or moisture movement across width (perpendicular to annual rings) should be a minimum. This type may be more efficiently produced by vertically laminating flat grain stock.

6.1.4 *Laminate class*[1].

(a) *Class 1-high decay resistance.* For service where high decay or wood destroying insect hazard exists, such as damp, humid, warm areas, having poor ventilation and exposure to freshwater leakage and condensation; for parts where replacement would be difficult and costly, and long time service is required.

(b) *Class 2-good decay resistance.* For service where decay or insect hazard is moderately high, or may be high at times, but ventilation and drying is generally possible and long time service is required. May be used under adverse decay conditions where a shorter service life can be tolerated.

(c) *Class 3-moderate decay resistance.* For service where decay or insect hazard is not high or where occasional wetting occurs but good ventilation prevails and long time service is required; may be used in higher decay hazard locations where replacement or moderate service life can be tolerated; may be used under continuously submerged, waterlogged conditions.

6.1.5 *End-joint arrangement.* Arrangement 1 is intended for laminates which will be loaded primarily in tension. Arrangement 2 is intended for laminates which will be loaded primarily in bending.

6.2 Ordering data. Procurement documents should specify the following:

(a) Title, number, and date of this specification.

(b) Pre-award certification (see 3.1 and 6.9).

(c) Thickness, width, length, shape (include drawings and sharpest radius of curvature, if curved members are required), and intended use (for example frame, keel, etc.) of laminates (see 3.4.3 and 3.9).

(d) Grade of laminations and type, and class of laminates (see 3.2 and 6.1.2).

(e) Arrangement of end-joints in laminates (see 3.4.2 and 6.1.5).

(f) Side coatings, if required (see 3.8 and 6.8).

(g) That the contractor should pile material on stickers when stored outside, and protect it from precipitation and the direct rays of the sun, if side coatings are not specified (see 6.8).

(h) Marking of individual laminates and shipment markings (see 3.9 and 5.1.1.3).

6.3 Definitions.

6.3.1 *Laminate.* For purposes of this specification a laminate is considered to be an adhesive-bonded assembly consisting of layers of wood with their grain running in the same direction.

6.3.2 *Lamination.* A lamination is a single layer of wood used or to be used in a laminated assembly. A lamination may

[1] Laminate classes do not refer to marine borer resistance. For direct exposure to marine borers (Toredo, Bankia, Limmoria) class 3 laminates, with unlimited, untreated sapwood, should be specified to be treated after all shaping and drilling, in accordance with applicable requirements of TT-W-571.

contain edge-joints or end-joints to provide required widths and lengths.

6.3.3. *Lamination components.* Pieces of lumber prior to end-joining shall be considered lamination components. The components may contain edge-joints to obtain lamination width.

6.3.4. *Equivalent knot defects.* Lamination defects listed in this specification which have been assigned a value equivalent to a knot of a given diameter size (see 3.2.2.2).

6.4 Identification of red and white oak. It is very important that lumber secured under this specification be identified as to white oak or red oak, or sapwood or heartwood. The sapwood of both species possesses no natural resistance and is subject to rapid decay; hence, sapwood of white oak is restricted and red oak is not permitted in this specification unless preservative treatment is given (see 3.2.4.1 and 3.2.4.2).

6.4.1 *Visual identification.* It is possible to separate the red oak from white oak by visual examination. The color of the wood is a ready but not absolutely reliable means of distinguishing the wood of the white oak group from that of the red oak group. The wood of the latter group usually has a distinctly reddish tinge, especially near the knots. The wood of the white oak group is generally a grayish brown, but occasionally a reddish tinge is found in white oak lumber. For more accurate identification it is necessary to examine the pores of the wood, which appear as tiny holes on a smoothly-cut end surface. They vary in size throughout each growth ring, being larger in the spring-wood where they are visible to the eye, decreasing in size abruptly toward the summerwood. The large pores in the springwood of the heartwood and inner sapwood of the woods of the white oak group are usually plugged up with a froth-like growth called tyloses, and those of the red oak group are open. This feature, however, is not so reliable for classification as the character of the much smaller pores in the summerwood. To tell whether a piece of oak belongs to the white or red oak group, visually, cut the end grain smoothly with a sharp knife across several growth rings of average width. With a hand lens examine the small pores in the dense summerwood. If the pores are plainly visible as minute rounded openings, and can readily be counted, the wood belongs to the red oak group. If the pores in the summerwood are very small, somewhat angular, and so numerous that it would be exceedingly difficult to count them, the wood belongs to the white oak group.

6.4.2 *Chemical identification.* White oak can be readily differentiated from red oak, as can sapwood from heartwood, by the use of chemical solutions which result in a characteristic color change when applied to questionable boards or timbers. The chemicals and necessary procedures are as follows:

Indicator I. To distinguish oak sapwood from heartwood:

(a) Prepare a 0.5 percent solution of methyl orange in 25 percent alcohol solution.

(b) Apply as a brush stripe to freshly surfaced portion:

(1) Yellow color indicates oak sapwood.

(2) Red color indicates oak heartwood.

Indicator II. To distinguish red oak from white oak:

(a) Prepare solution A as follows:

(1) Dissolve 6.98 grams of benzidine hydrochloride in 10.6 cc of concen-

trated hydrochloric acid.

(2) Add 970 grams (cc.) of distilled water.

(b) Prepare solution B as a 10 percent aqueous solution of sodium *nitrite.*

(c) Mix equal amounts of solutions A and B sufficient for 1 day's use. (The two solutions together are unstable for longer periods)

(d) Apply as a brush stripe to freshly cut or clean bright surface of heartwood only.

(e) Observe color reaction 20 to 30 minutes after applying:

(1) Light to medium reddish-orange color indicates red oak.

(2) Dark greenish-brown color indicates white oak.

Users are cautioned to prevent skin contact with the chemicals and to avoid spilling of chemicals on clothing. It will be noted that it is necessary to apply indicator II as a 50–50 mixture of solutions A and B, as a misleading color reaction can otherwise occur. The chemicals are readily obtainable and provide positive identification rapidly.

6.5 Penetration of preservative in white oak sapwood. White oak sapwood is generally easily penetrated with preservatives and will be as decay resistant as the heartwood when treated.

6.6 Penetration of preservative in red oak. When red oak is chosen or specified for laminating, care should be exercised to select species of red oak which are open pored, a feature which facilitates thorough pressure treatment with preservatives. In general upland species of red oak are more porous than are lowland species of red oak. Normally common black oak (Quercus velutina), Eastern red oak or Northern red (Quercus rubra), and scarlet oak (Quercus coccinea) are easily pressure treated. Southern red oak (Quercus falcata) is usually more difficult to treat. Red oaks, such as California black oak (Quercus Kelloggii), and blackjack oak, (Quercus marilandica), water oak (Quercus nigra), willow oak (Quercus phellos), and bottom-land red oak (Quercus nuttallii) are refractory in nature and will not take the required penetration and retentions, and shall not be used. Fortunately, these species of red oak do not usually produce lumber of laminating grade, and it is not expected that they will appear on the market in large quantities. Caution should be taken when purchasing red oak lumber from localities where these species are prevalent. Red oak lumber which appears to have its pores filled with tyloses should be avoided.

6.7 Caution for curing preservative treated oak. Wood which has been pressure treated with preservatives should not be cured at high temperatures due to possible weakening of wood under these conditions.

6.8 Stacking and coatings. Laminated oak stored outdoors, awaiting, during or after shipment, should be piled with stickers separating the pieces to allow air circulation. If side coatings are not used, the material should be protected from precipitation and the direct ray of the sun. Side coatings should be specified if the laminated oak is stored outside, unprotected. End coatings should be renewed as necessary when laminated oak is stored outdoors in covered piles. When specifying side coatings, the end use should be taken into account. Surfaces in the exterior underwater portions of ships and boats are coated with antifouling paint. Since aluminum coating has a tendency to blister when used under such paints, it should not be specified for these surfaces

if the end product is to be supplied ready to install. Provisions for covered transportation and storage should be specified if side coatings are not specified.

6.9 Pre-award examination. Pre-award evidence submitted by prospective suppliers shall be forwarded for technical review and recommendations to:

Commander
Puget Sound Naval Shipyard
Quality Assurance Division
Bremerton, Washington 98314

6.10 Changes from previous issue. The extent of changes (deletions, additions, etc.) preclude the annotation of the individual changes from the previous issue of this document.

Custodians:

Army—MO

Navy—SH

Review activities:

Army—MO

Navy—SH

Preparing activity:

Navy—SH

(Project 5510-0081)

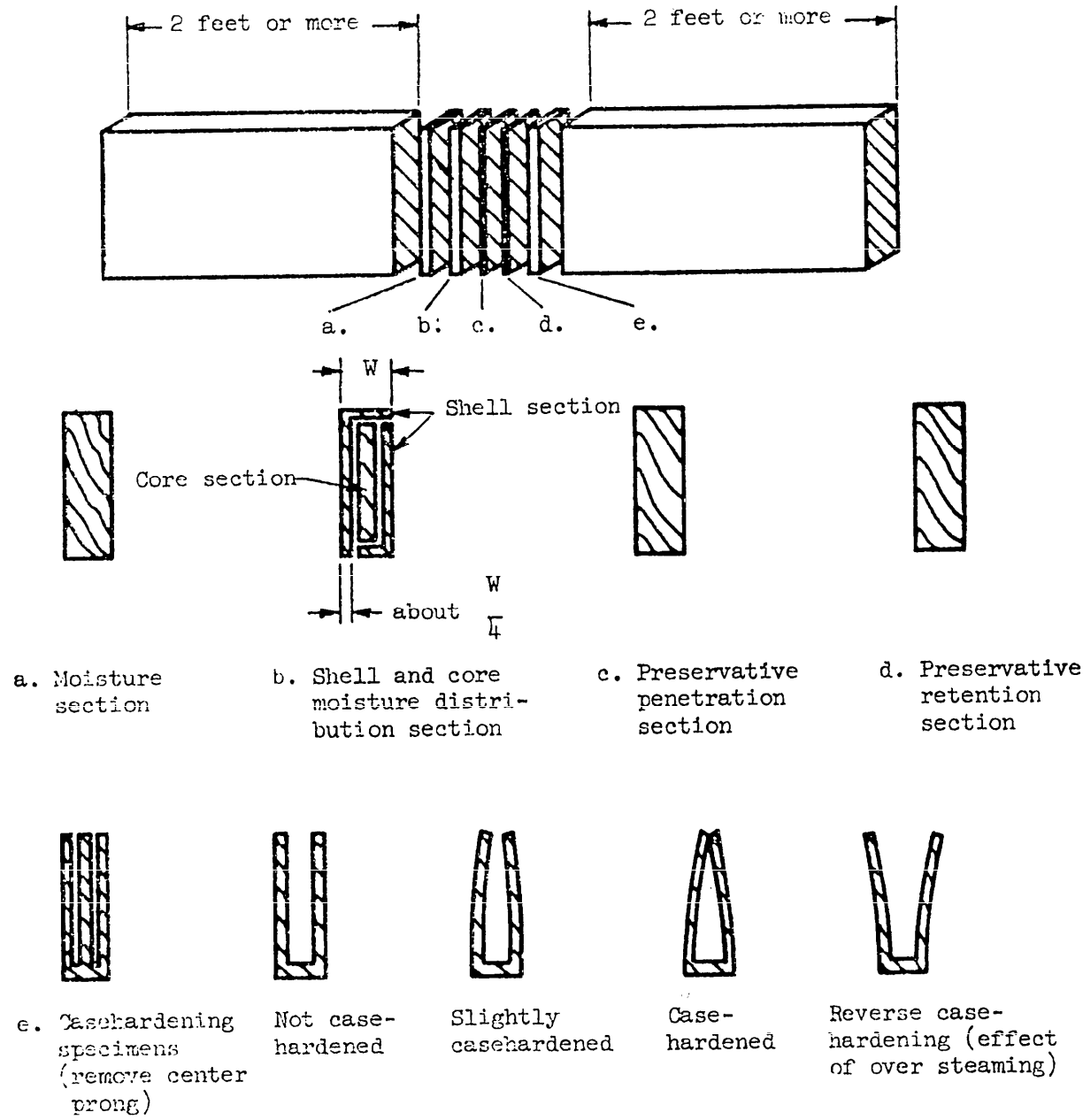

FIGURE 1. *Test sections for determining moisture content, moisture distribution, preservative penetration, preservative retention and casehardening.*

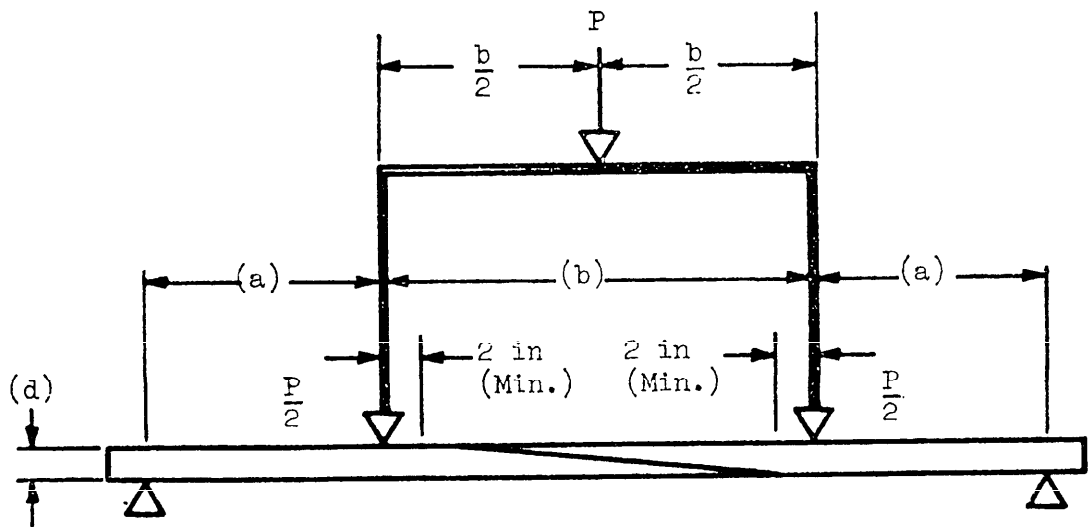

Note: a - 7d to 10d

SH8530

FIGURE 2. *Bend test for end-joints.*

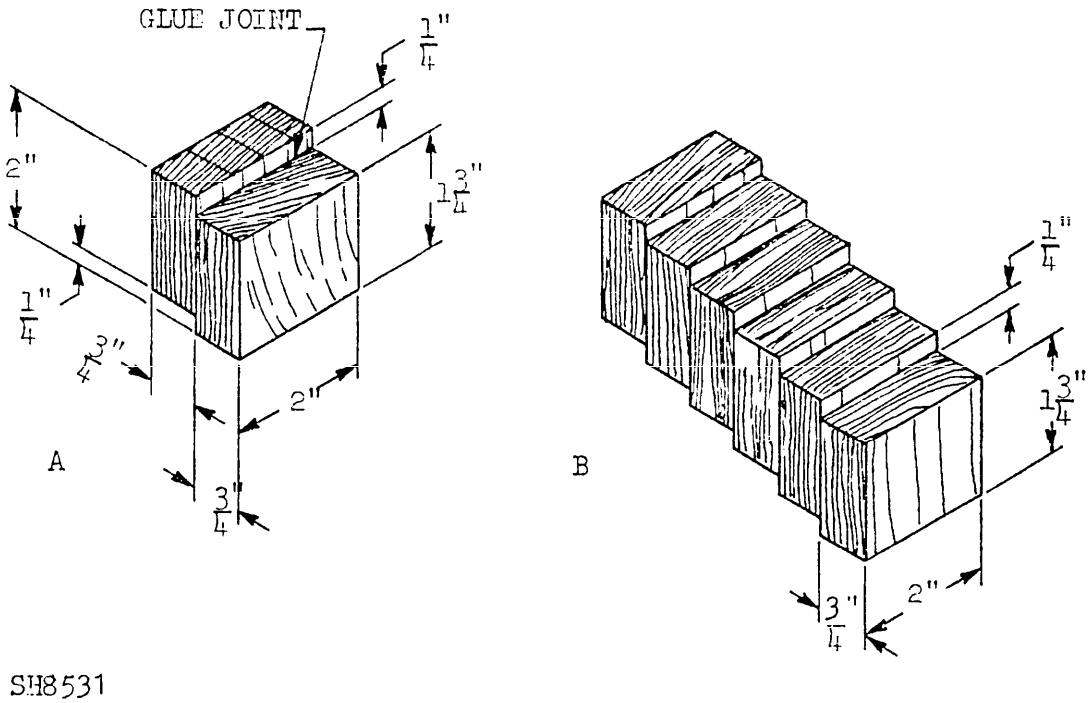

FIGURE 3. *Standard block (A) and stair step type (B) shear specimens for testing glue point strength.*

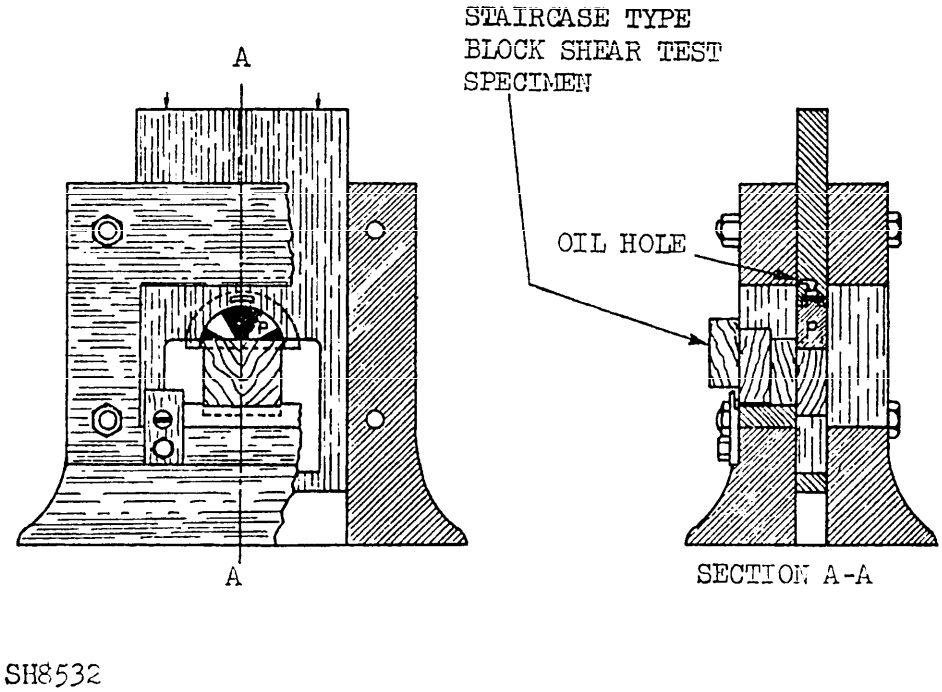

FIGURE 4. *Shearing tool.*

SPECIFICATION ANALYSIS SHEET

Form Approved
Budget Bureau No. 119-R004

INSTRUCTIONS

This sheet is to be filled out by personnel either Government or contractor, involved in the use of the specification in procurement of products for ultimate use by the Department of Defense. This sheet is provided for obtaining information on the use of this specification which will insure that suitable products can be procured with a minimum amount of delay and at the least cost. Comments and the return of this form will be appreciated. Fold on lines on reverse side, staple in corner, and send to preparing activity *(as indicated on reverse hereof)*.

SPECIFICATION

ORGANIZATION *(Of submitter)*

CITY AND STATE

CONTRACT NO.

QUANTITY OF ITEMS PROCURED

DOLLAR AMOUNT
$

MATERIAL PROCURED UNDER A

☐ DIRECT GOVERNMENT CONTRACT ☐ SUBCONTRACT

1. HAS ANY PART OF THE SPECIFICATION CREATED PROBLEMS OR REQUIRED INTERPRETATION IN PROCUREMENT USE?
   A. GIVE PARAGRAPH NUMBER AND WORDING.

   B. RECOMMENDATIONS FOR CORRECTING THE DEFICIENCIES.

2. COMMENTS ON ANY SPECIFICATION REQUIREMENT CONSIDERED TOO RIGID

3. IS THE SPECIFICATION RESTRICTIVE?

   ☐ YES ☐ NO IF "YES", IN WHAT WAY?

4. REMARKS *(Attach any pertinent data which may be of use in improving this specification. If there are additional papers, attach to form and place both in an envelope addressed to preparing activity)*

SUBMITTED BY *(Printed or typed name and activity)*

DATE

DD FORM 1 APR 63 1426 REPLACES NAVSHIPS FORM 4863, WHICH IS OBSOLETE D14000

FOLD

DEPARTMENT OF THE NAVY
BUREAU OF SHIPS
WASHINGTON, D. C. 20360

OFFICIAL BUSINESS

POSTAGE AND FEES PAID
NAVY DEPARTMENT

CHIEF BUREAU OF SHIPS
SPECIFICATIONS AND STANDARDIZATION BRANCH
DEPARTMENT OF THE NAVY
WASHINGTON, D. C. 20360

FOLD