Downloaded from http://www.everyspec.com

MIL-V-81722A(AS)
8 April 1975
SUPERSEDING
MIL-V-81722(AS)
15 October 1971

MILITARY SPECIFICATION

# VALVE, INFLATION, LIFE RAFT, FLU-6/P

This specification has been approved by the Naval Air Systems Command, Department of the Navy.

## 1. SCOPE

1.1 This specification covers requirements for one type of one man life raft inflation valve designated as FLU-6/P.

## 2. APPLICABLE DOCUMENTS

2.1 The following documents of the issue in effect on date of invitation for bids or request for proposal, form a part of this specification to the extent specified herein.

SPECIFICATIONS

**Federal**

| | |
|---|---|
| BB-C-101 | Carbon Dioxide ($CO_2$), Technical and U.S.P. |
| BB-N-411 | Nitrogen, Technical |
| TT-I-558 | Ink, Marking Stencil, Opaque, for Nonporous Surfaces (Metal, Glass, Etc.) |
| UU-T-81 | Tags, Shipping and Stock |
| PPP-B-636 | Box, Fiberboard |
| PPP-C-843 | Cushioning Material, Cellulosic |
| PPP-T-45 | Tape, Gummed, Paper, Reinforced and Plain, for Sealing and Securing |

FSC 4220

Downloaded from http://www.everyspec.com



Military

| | |
|---|---|
| MIL-B-117 | Bags, Sleeve and Tubing-Interior Packaging |
| MIL-B-131 | Barrier Material; Water Vaporproof; Flexible |
| MIL-C-7905 | Cylinders, Compressed Gas, Non-Shatterable |
| MIL-P-19834 | Plates, Identification, Metal Foil, Adhesive Backed |

STANDARDS

Federal

| | |
|---|---|
| FED-STD-151 | Metals, Test Methods |

Military

| | |
|---|---|
| MIL-STD-105 | Sampling Procedures and Tables for Inspection by Attributes |
| MIL-STD-129 | Marking for Shipment and Storage |
| MIL-STD-130 | Identification Marking of U.S. Military Property |
| MIL-STD-889 | Dissimilar Metals |
| MS26545 | Cylinder-Compressed Gas, Non-Shatterable |

DRAWINGS

Naval Air Development Center

| | |
|---|---|
| CL202D2 | Actuation Modification, Inflation Valve |

(When requesting any of the applicable documents, refer to both title and number. All requests should be made via the cognizant Government quality control representative. Copies of this specification and other unclassified specifications and drawings required by contractors in connection with specific procurement functions should be obtained upon application to the Commanding Officer, Naval Publications and Forms Center, (Code 1051), 5801 Tabor Avenue, Philadelphia, Pennsylvania 19120. All other documents should be obtained from the procuring activity or as directed by the contracting officer.)

Downloaded from http://www.everyspec.com



2.2 Other publications. The following document forms a part of this specification to the extent specified herein. Unless otherwise indicated, the issue in effect on the date of invitation for bids or request for proposal shall apply.

NATIONAL BUREAU OF STANDARDS

Handbook H28 Screw Thread Standards for Federal Services

(Copies of Handbook H28 may be obtained from the Superintendent of Documents, Government Printing Office, Washington, DC 20402.)

3. REQUIREMENTS

3.1 Qualification. The FLU-6/P one man life raft inflation valve furnished under this specification shall be a product which is qualified for listing on the applicable qualified products list at the time set for opening of bids (see 4.3, 4.3.1, 4.3.1.1, and 6.3). In addition, the retention of the qualification for the FLU-6/P one man life raft inflation valve on the applicable qualified products list shall be dependent on periodic verification of continued compliance with the requirements of this specification (see 4.3 and 4.3.2).

3.2 First article. Unless otherwise specified, the FLU-6/P one man life raft inflation valve furnished under this specification shall be a product which has been inspected and has passed the first article inspection specified in 4.4 through 4.4.2.

3.3 Materials and components. The materials and components shall conform to the applicable specifications and drawings as listed or required herein. Unless otherwise specified, elastomers and tetrafluoroethylene used in the inflation valve shall have been manufactured not more than 12 months prior to the date of delivery of the inflation valves (see 6.2 (g)).

3.3.1 Metals. The metals used in the inflation valve shall be of the corrosion resistant type or shall be suitably protected as specified herein to resist corrosion due to salt spray or atmospheric conditions to which the inflation valve may be subjected, when in storage or during normal service life.

3.3.1.1 Dissimilar metals. Dissimilar metals, as defined in MIL-STD-889, shall not be used in intimate contact with each other, unless suitably protected against electrolytic corrosion by means of protective coatings.

3.3.2 Protective treatment. When materials are used in the construction of the inflation valve that are subject to deterioration, when exposed to environmental conditions likely to occur during service usage, they shall be protected against such deterioration in a manner that will in no way prevent compliance with the performance requirements of this specification. Protective coatings which might crack, chip,

Downloaded from http://www.everyspec.com



or scale during normal service life or under extremes of environmental conditions shall not be used.

3.4 Design.

3.4.1 General design requirements. The inflation valve shall be designed to be compatible for use with all one man life raft assemblies and shall conform to the requirements of Figure 1. The inflation valve assembly shall consist of the following major components: a valve body subassembly, a cap, and a lanyard assembly. In addition, the valve assembly shall have a seal washer, coupling nut, spring clip, and diffuser, as specified in this specification. The valve body subassembly shall include a movable sleeve (see Figure 2) which is positioned by means of a spring assembly. The sleeve shall not be capable of being moved until the spring tension is released. Further, the valve assembly shall have provisions for removal of the lanyard assembly from the valve body without the use of any special tools. The valve assembly shall have provisions for recharging without the use of any special tools; however, if parts removal is required to affect a recharge, suitable securing provisions shall be included to preclude inadvertent valve disassembly. The inflation valve assembly shall be designed to operate freely under all conditions to which it may be subjected and shall be operable from any direction of pull. The valve assembly, when actuated, shall provide an unrestricted passage of carbon dioxide gas from the outlet without leakage. A safety port consisting of a safety plug and replaceable frangible disc shall be provided to release the carbon dioxide gas into the atmosphere in case of excessive cylinder pressure. The valve shall permit charging of the $CO_2$ cylinder through the outlet. Upon actuation of the valve, the lanyard assembly shall separate completely from the valve body. All parts not specifically detailed in the specification shall be entirely compatible with those components which are specified.

3.4.2 Specific design requirements.

3.4.2.1 Valve body. The valve body shall conform to the requirements in Figure 2.

3.4.2.2 Diffuser. The inflation valve shall be furnished with a diffuser conforming to Figure 3. The diffuser shall be fully inserted into the coupling nut of the valve with hand tightening.

3.4.2.3 Spring clip. A spring clip, conforming to Figure 3, shall be installed on each valve to prevent the inadvertent release of the lanyard assembly when the cap is moved or jarred accidentally. The spring clip shall in no way interfere with the function of the valve nor of the lanyard assembly which shall separate from the valve, when it is in the fully open position. The spring clip shall be retained as shown in Figure 1.

Downloaded from http://www.everyspec.com



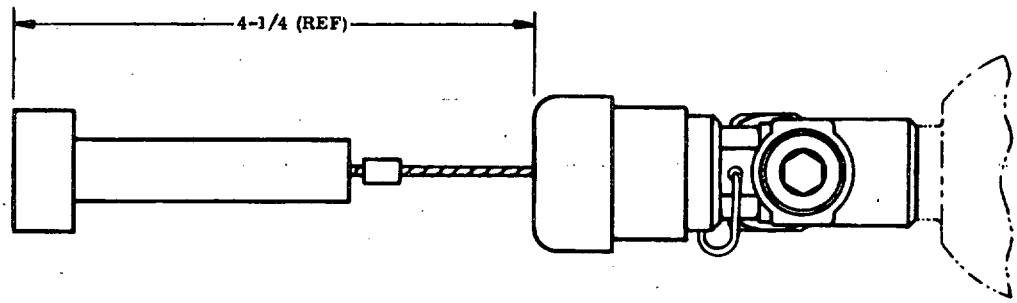


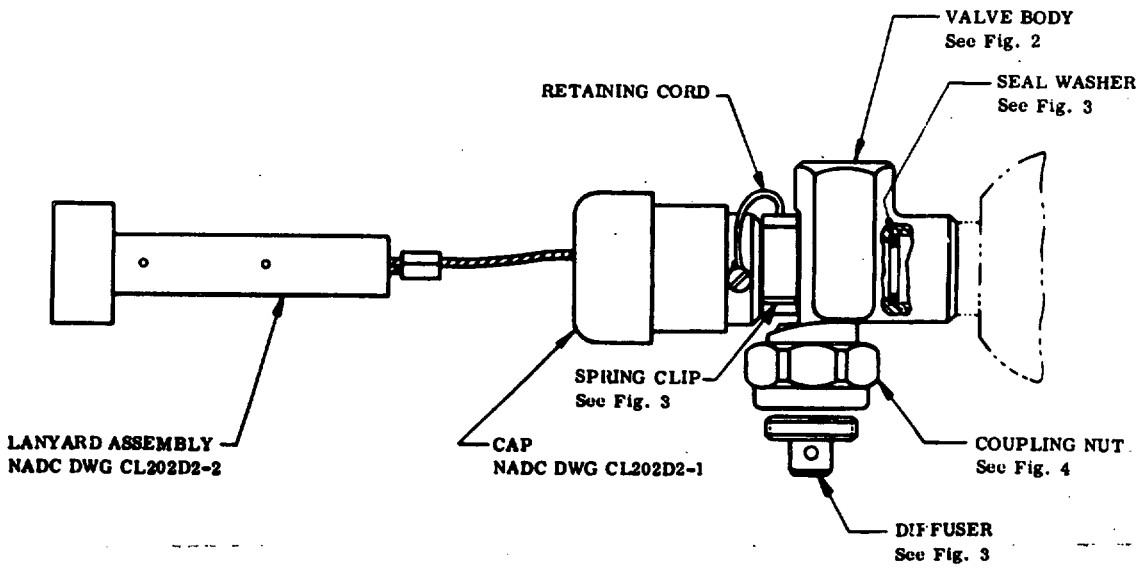


FIGURE 1. INFLATION VALVE ASSEMBLY

Downloaded from http://www.everyspec.com



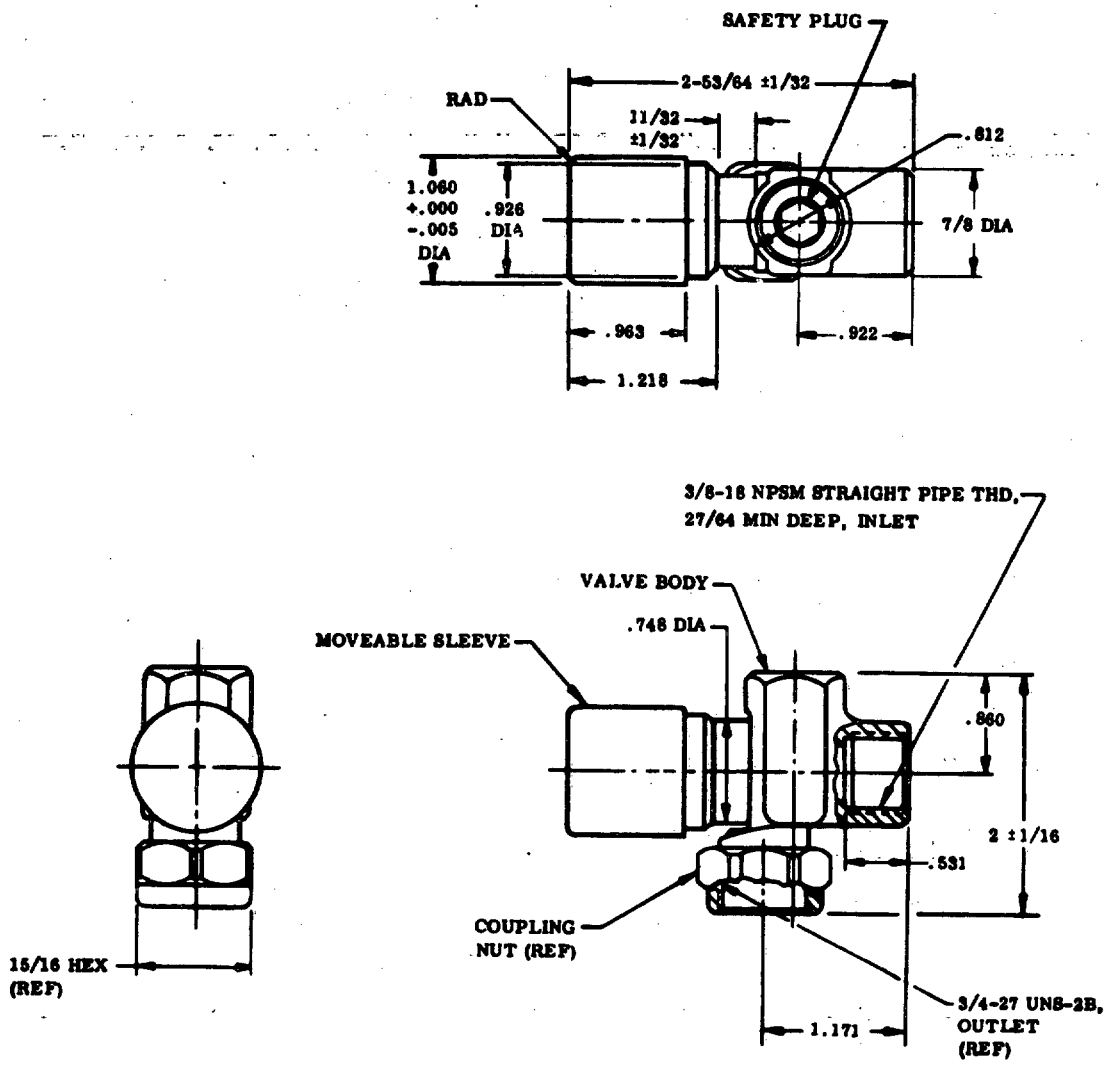


DIMENSIONS IN INCHES.

UNLESS OTHERWISE SPECIFIED TOLERANCES SHALL BE:
FRACTIONS ±1/64, DECIMALS ±.005, ANGLES ±1°.

FIGURE 2. VALVE BODY SUBASSEMBLY

Downloaded from http://www.everyspec.com



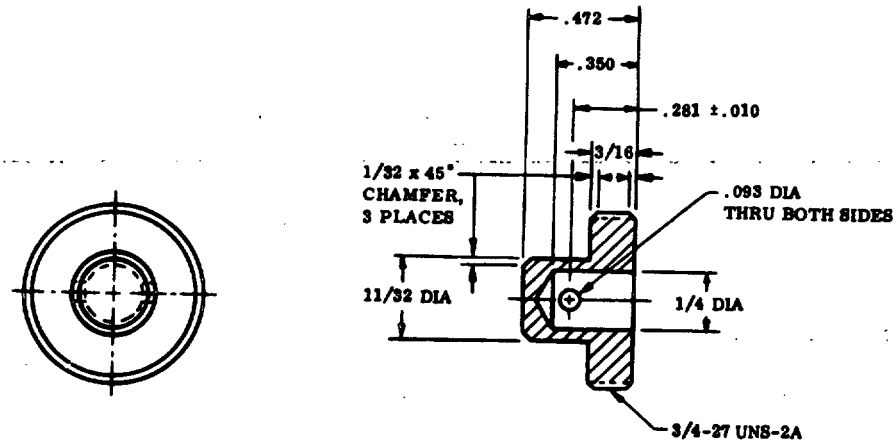


DIFFUSER (PLASTIC OR BRASS)

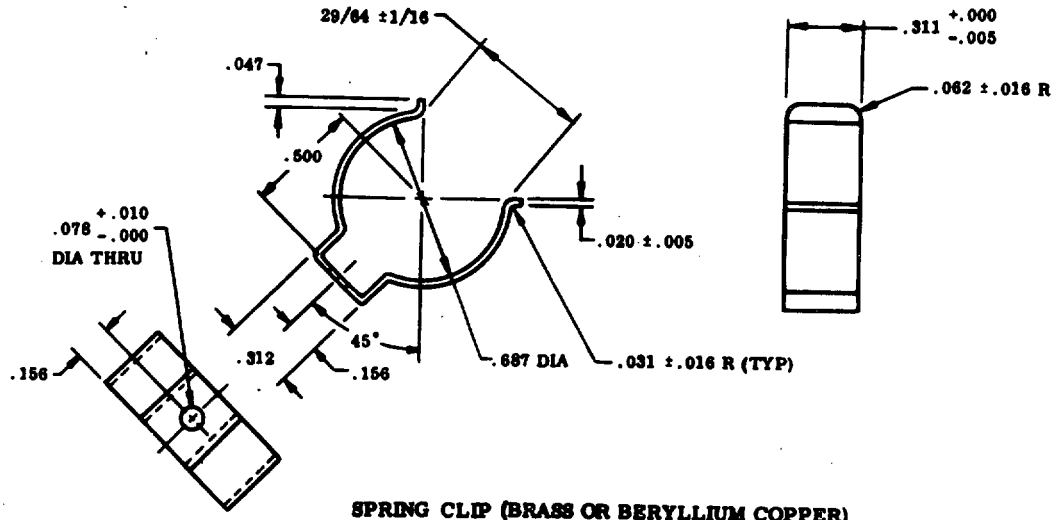


SPRING CLIP (BRASS OR BERYLLIUM COPPER)

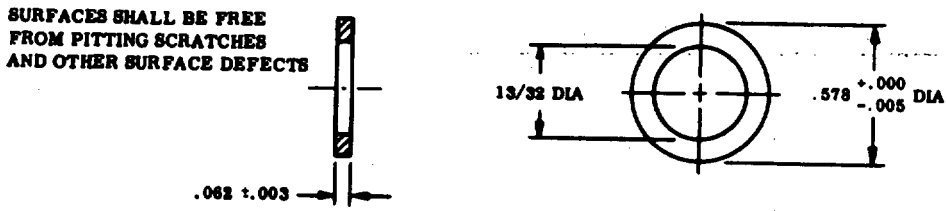


SEAL WASHER (SOFT ANNEALED COPPER)

DIMENSIONS IN INCHES.

UNLESS OTHERWISE SPECIFIED, TOLERANCES:
FRACTIONS ±1/64, DECIMALS ±.005, ANGLES ±1°

FIGURE 3. INFLATION VALVE DETAILS

Downloaded from http://www.everyspec.com



3.4.2.4 Seal washer. The washer shall be made from soft annealed copper and shall conform to the requirements of Figure 3.

3.4.2.5 Coupling nut. The coupling nut shall be made of brass and shall conform to the requirements of Figure 4.

3.4.2.6 Cap. A cap shall be installed by cementing the cap to the plastic sleeve of the valve. Polychloroprene adhesive only shall be used. The cap shall conform to the requirements of NAVAIRDEVCEN Dwg. CL202D2.

3.4.2.7 Lanyard assembly. The lanyard assembly shall conform to the requirements of NAVAIRDEVCEN Dwg. CL202D2.

3.4.2.8 Screw threads. The screw threads shall conform to H28 and the designation specified on Figure 2 and Figure 3, as applicable.

3.5 Performance inspections.

3.5.1 Leakage. The inflation valve, when inspected as specified in 4.7.2 through 4.7.2.3, as applicable, shall conform to Table I.

TABLE I

LEAKAGE LIMITS

| TEMPERATURE DEGREES FAHRENHEIT | MAXIMUM LEAKAGE RATE MILLILITERS/HR |
|---|---|
| 70 | NONE |
| 160 | 1/4 |
| minus 65 | 5 |

3.5.2 Operating force. The inflation valve, when inspected as specified in 4.7.3, shall require an operating force of 15 to 21 pounds to fully open the valve. The lanyard assembly shall separate completely from the valve without damage to the valve or to itself.

3.5.3 Operation. The inflation valve, when inspected as specified in 4.7.4.1 and 4.7.4.2, as applicable, shall discharge the minimum amounts of carbon dioxide specified in Table II in a maximum time of 5 seconds. There shall be no leakage from the body of the valve. The diffuser shall be removed during this test.

Downloaded from http://www.everyspec.com



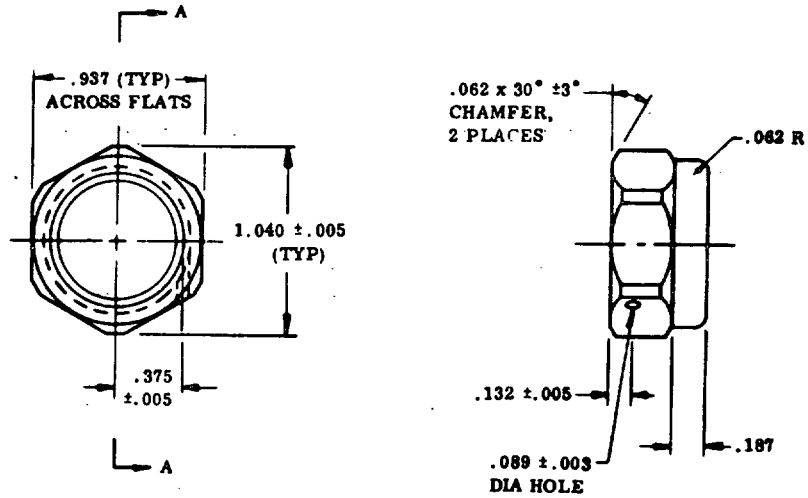


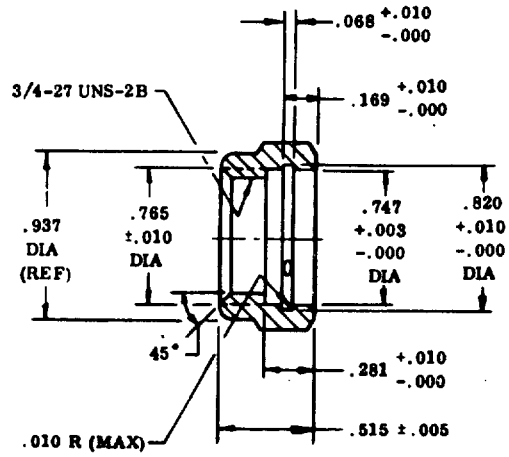


SECTION A-A

COUPLING NUT (BRASS)

DIMENSIONS IN INCHES.

UNLESS OTHERWISE SPECIFIED, TOLERANCES:
DECIMALS ±.016, ANGLES ±1°

FIGURE 4. INFLATION VALVE DETAILS

Downloaded from http://www.everyspec.com



TABLE II

AMOUNT OF CARBON DIOXIDE DISCHARGED

| TEMPERATURE DEGREES FAHRENHEIT | MINIMUM PERCENT DISCHARGED |
|---|---|
| 70 | 90 |
| minus 20 | 50 |

3.5.4 Endurance. The inflation valve, when inspected as specified in 4.7.5, shall permit the lanyard assembly to separate completely, each time the valve is actuated, without damage to the valve or itself. The cable or any of its strands shall not break and the loop shall not separate from the cable. The cable shall not be damaged, become loose or separate from the lanyard assembly. The sleeve and spring assembly shall not be capable of being moved down until the spring tension is released. The sleeve and spring assembly shall not become frozen and shall be capable of being moved up or down without difficulty. There shall be no difficulty in charging the carbon dioxide cylinder while attached to the inflation valve. The valve shall then be inspected and conform to the requirements for leakage at 70 degrees Fahrenheit, 3.5.1, operating force, 3.5.2, and operation at 70 degrees Fahrenheit, 3.5.3, in the order listed.

3.5.5 Coupling nut torque. When inspected as specified in 4.7.6, the coupling nut of the valve shall withstand a tightening torque of 25 foot pounds without failure, resultant leakage, or permanent deformation to the coupling nut.

3.5.6 Hydrostatic pressure of the frangible disc. The inflation valve, when inspected as specified in 4.7.7, shall be constructed in such a way that the frangible disc will burst at a pressure between 3150 and 2500 psig, without any damage to the valve.

3.5.7 Vibration. When vibrated as specified in 4.7.8, the carbon dioxide filled cylinder shall not be activated nor shall there be a loss in weight of the carbon dioxide charge. The sleeve and spring assembly shall not have moved down. The spring clip and lanyard assembly shall not have separated from the valve. The sleeve and spring assembly shall not be capable of being moved down until the spring tension is released. The sleeve and spring assembly shall not become frozen and shall be capable of being moved up or down without difficulty. The ball shall not be damaged, become loose or separate from the lanyard assembly. The valve shall then be inspected and conform to the requirements for leakage at 70 degrees Fahrenheit, 3.5.1, operating force, 3.5.2, and operation at 70 degrees Fahrenheit, 3.5.3, in the order listed.

Downloaded from http://www.everyspec.com



3.5.8 Cycling. When inspected, as specified in 4.7.10, the inflation valve shall function properly. The valve, when actuated, shall provide an unrestricted passage of the carbon dioxide gas through the outlet without leakage from the valve body. The lanyard assembly shall separate completely from the valve, without damage to the valve or itself, each time the carbon dioxide filled cylinder is actuated. The cable or any of its strands shall not break and the loop shall not separate from the cable. The ball shall not be damaged, become loose or separate from the lanyard assembly. The sleeve and spring assembly shall not be capable of being moved down until the spring tension is released. The sleeve and spring assembly shall not become frozen and shall be capable of being moved up or down without difficulty. After completion of cycling, the valve shall then be inspected and conform to the requirements for leakage at 70 degrees Fahrenheit, 3.5.1, operating force, 3.5.2, and operation at 70 degrees Fahrenheit, 3.5.3, in the order listed.

3.5.9 Gravity drop operation. When inspected, as specified in 4.7.9, the inflation valve shall function properly. The valve when actuated, shall provide an unrestricted passage of the carbon dioxide gas through the outlet without leakage from the valve body. There shall be no difficulty in charging the carbon dioxide cylinder while attached to the inflation valve. The lanyard assembly shall separate completely from the valve, without damage to the valve or itself, each time the carbon dioxide filled cylinder is actuated. The cable or any of its strands shall not break and the loop shall not separate from the cable. The ball shall not be damaged, become loose or separate from the lanyard assembly. The sleeve and spring assembly shall not be capable of being moved down until the spring tension is released. The sleeve and spring assembly shall not be frozen and shall be capable of being moved up or down without difficulty. The valve shall then be inspected and conform to the requirements for leakage at 70 degrees Fahrenheit, 3.5.1, operating force, 3.5.2, and operation at 70 degrees Fahrenheit, 3.5.3, in the order listed.

3.5.10 Salt spray. When inspected, as specified in 4.7.11, the inflation valve assembly shall show no evidence of permanent corrosion or damage. The coupling nut shall swivel freely after removal of the diffuser, and the movable sleeve shall be capable of being removed when the spring tension is released. The valve shall then be inspected for conformance to the requirements of leakage at 70 degrees Fahrenheit, 3.5.1, operating force, 3.5.2, and operation, 3.5.3, at 70 degrees Fahrenheit, in the order listed.

3.5.11 Strength of the lanyard assembly cable and attachments. When inspected as specified in 4.7.12, the loop, sleeve, and ball of the lanyard assembly shall withstand a force of 100 pounds without the cable or any of its strands breaking, loosening of the ball, or the loop or ball separating from the cable.

3.5.12 Weight. When determined as specified in 4.7.13, the maximum weight of the inflation valve and all components shall not exceed 0.35 pounds.

Downloaded from http://www.everyspec.com



3.6 Markings. Each inflation valve shall be marked with legible, durable, and sharply defined letters and numerals. The markings shall be molded characters conforming to MIL-STD-130, or inscribed on metal foil identification plates conforming to MIL-P-19834, Type I, and shall be as follows:

INFLATION VALVE, FLU-6/P
MIL-V-81722A(AS)
CONTRACT NO.
MANUFACTURER'S NAME OR TRADEMARK AND PART NUMBER
DATE OF MANUFACTURE (Month and Year)

The contract number and date of manufacture may be accomplished with the marking ink conforming to TT-I-558, black or blue in color; and when dry, shall be coated with a compatible, clear, waterproof lacquer.

3.6.1 Warning tag. Each inflation valve shall contain a warning tag, affixed behind the coupling nut, conforming to UU-T-81, Type B, Size 1, with the following information:

CAUTION

Install diffuser on inflation valve coupling when the inflation assembly (valve and cylinder) is not connected to the raft manifold.

3.7 Workmanship. The inflation valve shall be uniform in quality and free from any mechanical or other irregularities, or defects which could adversely affect performance, reliability, or durability. Because of the emergency use of this item, the importance of providing a product of uniform excellent quality cannot be overemphasized. The FLU-6/P one man life raft inflation valves shall conform to the quality and grade of product established by this specification. The occurrence of defects shall not exceed the acceptance criteria established herein.

## 4. QUALITY ASSURANCE PROVISIONS

4.1 Responsibility for inspection. Unless otherwise specified in the contract or purchase order, the supplier is responsible for the performance of all inspection requirements as specified herein. Except as otherwise specified in the contract or order, the supplier may use his own or any other facilities suitable for the performance of the inspection requirements specified herein, unless disapproved by the Government. The Government reserves the right to perform any of the inspections set forth in the specification where such inspections are deemed necessary to assure supplies and services conform to prescribed requirements.

Downloaded from http://www.everyspec.com



4.2 Classification of inspection. The examination and testing of the FLU-6/P one man life raft inflation valves shall be classified as follows:

a. Qualification inspection. Qualification inspection consists of examinations and tests performed on samples submitted for approval as qualified products (see 3.1, 4.3, 4.3.1, 4.3.1.1, and 6.3).

(1) Retention of qualification. Retention of qualification consists of periodic verification to determine compliance of the qualified product with the requirements of this specification (see 3.1, 4.3, and 4.3.2).

b. First article inspection. First article inspection consists of examinations and tests performed on samples which are representative of the production item after award of a contract to determine that the production item meets the requirements of this specification (see 3.2 and 4.4 through 4.4.2).

c. Quality conformance inspection. Quality conformance inspection consists of examinations and tests performed on individual products or lots to determine conformance of the products or lots to the requirements set forth in this specification (see 4.5 through 4.5.1.2).

4.3 Qualification.

4.3.1 Samples. The qualification inspection samples shall consist of five complete inflation valve assemblies. The qualification samples shall be forwarded to the test facility set forth in the letter of authorization to submit samples (see 6.3). The samples shall be plainly identified by securely attached durable tags marked with the following information:

Samples for qualification inspection
VALVE, INFLATION, LIFE RAFT, FLU-6/P
Manufacturer's Designation or Number
Submitted by (name) (date) for qualification inspection in accordance with the requirements of MIL-V-81722A(AS) under authorization (reference authorizing letter and number) (see 6.3)

4.3.1.1 Inspection. The qualification inspection of the FLU-6/P inflation valve shall consist of examinations and tests, specified in Table III, for each sample valve. The examination and tests shall be performed in the sequence listed.

Downloaded from http://www.everyspec.com



TABLE III

QUALIFICATION INSPECTION

| SEQUENCE OF INSPECTION | PARAGRAPH | | SAMPLE NUMBER | | | | |
|---|---|---|---|---|---|---|---|
| | REQUIREMENT | METHOD | 1 | 2 | 3 | 4 | 5 |
| Visual examination | Section 3 and applicable drawings | 4.7.1.1 | X | X | X | X | X |
| Dimensional check | 1/ | 4.7.1.1 | X | | | | |
| Weight | 3.5.12 | 4.7.13 | X | | | | |
| Leakage at 70 degrees Fahrenheit | 3.5.1 | 4.7.2.1 | X | X | X | X | X |
| Operating force | 3.5.2 | 4.7.3 | X | X | X | X | X |
| Operation at 70 degrees Fahrenheit | 3.5.3 | 4.7.4.1 | X | X | X | X | X |
| Endurance | 3.5.4 | 4.7.5 | X | | | | |
| Operation at minus 20 degrees Fahrenheit | 3.5.3 | 4.7.4.2 | | X | | | |
| Leakage at 160 degrees Fahrenheit | 3.5.1 | 4.7.2.2 | | X | | | |
| Leakage at minus 65 degrees Fahrenheit | 3.5.1 | 4.7.2.3 | | X | | | |
| Vibration | 3.5.7 | 4.7.8 | | X | | | |
| Coupling nut torque | 3.5.5 | 4.7.6 | | | X | | |
| Hydrostatic pressure of the frangible disc | 3.5.6 | 4.7.7 | | | X | | |
| Strength of the attachments to the lanyard assembly | 3.5.11 | 4.7.12 | | | X | | |

Downloaded from http://www.everyspec.com



TABLE III (Continued)

| SEQUENCE OF INSPECTION | PARAGRAPH | | SAMPLE NUMBER | | | | |
|---|---|---|---|---|---|---|---|
| | REQUIREMENT | METHOD | 1 | 2 | 3 | 4 | 5 |
| Cycling | 3.5.9 | 4.7.10 | | | | X | |
| Gravity drop operation | 3.5.8 | 4.7.9 | | | | | X |
| Salt spray | 3.5.10 | 4.7.11 | | | | | X |

1/ The valve shall be dimensionally checked for conformance to Figure 1 through Figure 4, as applicable.

4.3.2 Retention. The retention of qualification shall consist of periodic verification to determine compliance of the qualified FLU-6/P inflation valve with the requirements of this specification. Periodic verification shall be by certification unless otherwise specified by the activity responsible for the Qualified Products List and shall be at intervals of not more than two years.

4.4 First article.

4.4.1 First article samples. Unless otherwise specified, as soon as practicable after award of the contract or order, the manufacturer shall submit four inflation valves and four diffusers. The samples shall be representative of the construction, workmanship, components, and materials to be used during production. When a manufacturer is in continuous production of these inflation valves from contract to contract, submission of further first article inspection samples on the new contract may be waived at the discretion of the procuring activity (see 6.2(c)). Approval of the first article inspection samples or the waiving of the first article inspection does not preclude the requirements for performing the quality conformance inspection. The first article inspection samples shall be furnished to the Government as directed by the contracting officer (see 6.2(d)).

4.4.2 First article inspection. The first article inspection of the inflation valve shall consist of the examinations and tests specified in Table IV for each sample valve. The examinations and tests shall be performed in the sequence listed.

4.4.3 First article approval. Upon completion of the first article inspection, all the applicable inspection reports and, when applicable, recommendations and comments pertinent for use in monitoring production will be forwarded to the cognizant Government activity. One of the approved first article inspection sample inflation valves will be returned to the manufacturer for use in monitoring production. The other three valves will be destroyed in the first article inspection and shall not be considered as a part of the quantity to be delivered under the contract.

Downloaded from http://www.everyspec.com



TABLE IV

FIRST ARTICLE INSPECTION

| SEQUENCE OF INSPECTION | PARAGRAPH | | SAMPLE NUMBER | | | |
|---|---|---|---|---|---|---|
| | REQUIREMENT | METHOD | 1 | 2 | 3 | 4 |
| Visual examination | Section 3 and applicable drawings | 4.7.1.1 | X | X | X | X |
| Dimensional check | 1/ | 4.7.1.1 | X | X | X | X |
| Weight | 3.5.12 | 4.7.13 | X | X | X | |
| Leakage at 70 degrees Fahrenheit | 3.5.1 | 4.7.2.1.2 | X | X | X | |
| Operating force | 3.5.2 | 4.7.3 | X | X | X | |
| Operation at 70 degrees Fahrenheit | 3.5.3 | 4.7.4.1 | X | X | X | |
| Operation at minus 20 degrees Fahrenheit | 3.5.3 | 4.7.4.2 | X | | | |
| Leakage at 160 degrees Fahrenheit | 3.5.1 | 4.7.2.2 | X | | | |
| Coupling nut torque | 3.5.5 | 4.7.6 | | X | | |
| Hydrostatic pressure of the frangible disc | 3.5.6 | 4.7.7 | | X | | |
| Strength of the attachments to the lanyard assembly | 3.5.11 | 4.7.12 | | X | | |
| Gravity drop operation | 3.5.8 | 4.7.9 | | | X | |
| Cycling | 3.5.9 | 4.7.10 | | X | | |

1/ The valve shall be checked dimensionally for conformance to Figures 1 through 4.

Downloaded from http://www.everyspec.com



4.5 Quality conformance inspection. The sampling and inspection levels shall conform to MIL-STD-105. The quality conformance inspection shall consist of the following examinations and tests:

Visual examination of the inflation valves
Dimensional check of the inflation valves
Leakage at 70, at 160, and at minus 65 degrees Fahrenheit
Operating force
Operation at 70 and at minus 20 degrees Fahrenheit
Coupling nut torque
Strength of the attachments to the lanyard assembly
Gravity drop operation
Weight
Preparation for delivery

4.5.1 Sampling.

4.5.1.1 Inspection lot.

4.5.1.1.1 Valves. An inspection lot size shall be expressed in units of one valve made essentially under the same conditions and from the same materials and components. The sample unit shall be one valve.

4.5.1.1.2 Preparation for delivery. An inspection lot size shall be expressed in units of one fully prepared shipping container, including valves, fully prepared for delivery from essentially the same materials and components. The sample unit shall be one shipping container, including valves, fully prepared for delivery with the exception that it need not be sealed.

4.5.1.2 Sampling for examinations and tests of the valves and preparation for delivery. The sample size, acceptance criteria, examinations, and tests required for the valves and preparation for delivery shall be as specified in Table V.

TABLE V

SAMPLE SIZE, ACCEPTANCE CRITERIA, EXAMINATIONS AND TESTS OF THE VALVES, AND PREPARATION FOR DELIVERY

| INSPECTION | PARAGRAPH | | SAMPLE SIZE | ACCEPTANCE CRITERIA 1/ |
|---|---|---|---|---|
| | REQUIREMENT | METHOD | | |
| Leakage: 70° F Single closed position | 3.5.1 | 4.7.2.1.1 | Every valve | Reject all defective units |

Downloaded from http://www.everyspec.com



TABLE V (Continued)

| INSPECTION | PARAGRAPH | | SAMPLE SIZE | ACCEPTANCE CRITERIA 1/ |
|---|---|---|---|---|
| | REQUIREMENT | METHOD | | |
| Leakage: (Continued) 70° F Both closed positions | 3.5.1 | 4.7.2.1.2 | Inspection level II | An acceptable quality level of 2.5 defects per 100 units |
| Operating force | 3.5.2 | 4.7.3 | Every valve | Reject all defective units |
| Operation at 70° F | 3.5.3 | 4.7.4.1 | Inspection level S-1 | An acceptable quality level of 2.5 defects per 100 units |
| Strength of attachments to lanyard assembly | 3.5.11 | 4.7.12 | Inspection level S-1 | An acceptable quality level of 2.5 defects per 100 units |
| Operation at -20° F | 3.5.3 | 4.7.4.2 | Inspection level S-1 | An acceptable quality level of 2.5 defects per 100 units |
| Leakage at 160° F | 3.5.1 | 4.7.2.2 | Inspection level S-1 | An acceptable quality level of 2.5 defects per 100 units |
| Leakage at -65° F | 3.5.1 | 4.7.2.3 | Inspection level S-1 | An acceptable quality level of 2.5 defects per 100 units |
| Coupling nut torque | 3.5.5 | 4.7.6 | Inspection level S-1 | An acceptable quality level of 2.5 defects per 100 units |
| Weight | 3.5.12 | 4.7.13 | Inspection level S-1 | An acceptable quality level of 2.5 defects per 100 units |

Downloaded from http://www.everyspec.com



TABLE V (Continued)

| INSPECTION | PARAGRAPH | | SAMPLE SIZE | ACCEPTANCE CRITERIA 1/ |
|---|---|---|---|---|
| | REQUIREMENT | METHOD | | |
| Gravity drop operation | 3.5.8 | 4.7.9 | Inspection level S-1 | An acceptable quality level of 2.5 defects per 100 units |
| Dimensional check | Section 3 and applicable drawings | 4.7.1.1 | Inspection level S-1 | An acceptable quality level of 10.0 defects per 100 units |
| Visual examination | Section 3 and applicable drawings | 4.7.1.1 | Every valve for major defects and Inspection Level II for minor defects | Reject all units with any major defect and an acceptable quality level of 6.5 defects per hundred units for minor defects |
| Preparation for delivery | Section 5 | 4.7.1.2 | Inspection level S-2 | An acceptable quality level of 2.5 defects per 100 units |

1/ The sampling plan acceptance numbers shall apply collectively to all the characteristics within a stated acceptable quality level.

2/ The leakage at 160 degrees Fahrenheit and leakage at minus 65 degrees Fahrenheit, and operation at 70 degrees Fahrenheit inspections shall be conducted on the same valves selected as samples for the operation at minus 20 degrees Fahrenheit inspection (see footnote 1/).

4.6 Inspection conditions.

4.6.1 Atmospheric conditions. Unless otherwise specified, all the inspections required by this specification shall be conducted at an atmospheric pressure of 28 to 32 inches of mercury, at a temperature of 77 ±18 degrees Fahrenheit (25 ±10 degrees Centigrade). When the inspections are conducted at an atmospheric pressure or temperature different from the above values, proper corrections shall be made for the change in instrument readings.

4.6.2 Carbon dioxide filled cylinder. When use of a carbon dioxide filled cylinder is specified in an inspection, the empty carbon dioxide cylinder shall conform to MIL-C-7905 and either MS26545B2C0020, MS26545B4C0020, MS26545B2C0021 or MS26545B4C0021 and shall be charged with 0.50 ±0.01 pound of carbon dioxide

Downloaded from http://www.everyspec.com



conforming to BB-C-101, Grade B, Type I. The cylinder shall be installed in the valve with a torque of 23 to 25 foot pounds. Prior to the installation of the valve on the cylinder, inspect the cylinder for cleanliness (loose dirt, rust, etc.).

4.6.3 Nitrogen. When use of gasious nitrogen is specified in an inspection, the nitrogen gas shall conform to BB-N-411, Type I, Class 1, Grade B.

4.6.4 Seal washer. The seal washer conforming to Figure 3 shall be replaced each time a carbon dioxide cylinder is attached to the valve during the inspection of the valve. Inflation valves shipped shall contain new, never used (compressed), seal washers.

4.6.5 Drying. Unless otherwise specified, the inflation valves, upon completion of the inspections, which require the inflation valve to be immersed in a liquid, shall be dried for 60 minutes at approximately 86 degrees Fahrenheit (30 degrees Centigrade), in a vacuum oven.

4.7 Inspection methods.

4.7.1 Visual examination.

4.7.1.1 Valves. Every valve shall be examined visually for major defects to determine conformance to this specification. Each valve, selected as a sample unit from the lot, shall be examined visually for minor defects and thoroughly checked dimensionally to determine conformance to this specification. The classification and list of defects, Tables VI and VII, shall be used to classify and enumerate the defects found.

TABLE VI

CLASSIFICATION OF DEFECTS FOR THE VISUAL EXAMINATION OF THE VALVES

| MAJOR | MINOR |
|---|---|
| 101. Any surface rough, misaligned, or contains any nick, sharp edge, crack, burr, pit, dent, sliver, or scale. | 201. Any markings missing, incorrect, illegible, incomplete, not of a permanent nature, or improperly located. |
| 102. Any finish missing or any component improperly finished. | 202. When applicable, contract number and date of manufacture not coated (see 3.6). |
| 103. Any component missing, malformed, corroded, fractured, chipped, bent, distorted, or damaged. | 203. Surface unclean or contains embedded foreign matter. |

Downloaded from http://www.everyspec.com



TABLE VI (Continued)

| MAJOR | MINOR |
|---|---|
| 104. Any component loose, detached, not attached as specified, or otherwise not securely retained. | 204. Any component not as specified or any defect of a component or defect of an assembly not herein classified which does not seriously affect the serviceability or appearance. |
| 105. Any threads missing, stripped, torn, or broken. | |
| 106. Any functional part that works with difficulty. | 205. Any component, component part or required operation omitted or any operation not herein classified improperly performed which does not affect the serviceability or appearance. |
| 107. Any component not as specified or any defect of a component or defect of assembly not herein classified. | |
| 108. Any component, component part, or required operation omitted or any operation not herein classified improperly performed thereby seriously affecting the serviceability or appearance. | |

TABLE VII

LIST OF DEFECTS FOR THE
FINISHED DIMENSIONS OF THE VALVES

| EXAMINE | DEFECT |
|---|---|
| Measure the valve outline, seal washer, diffuser 1/, lanyard assembly, spring clip, and cap. | Any measurement deviating from Figures 1 through 4 as applicable, with applicable tolerance shall be enumerated as a dimensional defect. |

4.7.1.2 Preparation for delivery. Each of the fully prepared shipping containers, containing valves, selected as a sample unit from the lot, shall be visually examined to determine that the packaging, packing, and marking conform to this specification. The list of defects, Table VIII, shall be used to enumerate the defects found.

Downloaded from http://www.everyspec.com



TABLE VIII

LIST OF DEFECTS FOR PREPARATION FOR DELIVERY

| ITEM | DEFECTS |
|---|---|
| Exterior and interior markings | Missing, incorrect, incomplete, illegible; of improper size, location, sequence, or method of application; markings not the same on the interior and exterior containers; information on the paper label in the polyethylene bag not readable through the film or no label in the film bag. |
| Packaging and packing materials | Any non-conforming component; any component missing, damaged, or otherwise defective. |
| Workmanship | Inadequate application of the components such as incomplete closure of the polyethylene bag, unit package, container flaps, loose strappings; bulging or distortion of the containers. |
| Exterior and interior weight, or content | Gross or net weight exceeds the requirements; any applicable component packaged separately from the valve; any applicable component folded, bent or creased. |

4.7.2 Leakage.

4.7.2.1 At 70° F.

4.7.2.1.1 Single closed position. An empty carbon dioxide cylinder shall be installed in the valve and then charged with carbon dioxide (see 4.6.2 and 4.6.4). The valve shall not contain the spring clip or lanyard assembly. The charged cylinder and valve shall be submerged in water, in a vertical position, and stabilized at a temperature of 70 ±5 degrees Fahrenheit (21 ±2.8 degrees Centigrade) for a minimum of 30 minutes. As an alternate method, nitrogen gas pressure may be applied to the valve inlet, with the valve in the closed position, in place of the charged carbon dioxide cylinder. The pressure shall be stabilized at 845 ±10 psig. Any leakage during this time, shall be collected in the apparatus of the type shown in Figure 5. The calibrated collection device shall be inverted (the sealed end down) and shall be completely filled with water, at 70 ±5 degrees Fahrenheit. A glass plate shall be placed over the wide mouthed part. The glass plate and the collection device shall be firmly held together and then inverted without the loss of any water. The collection device shall then be submerged in water and the glass plate shall be removed, by sliding away without any loss of water in the

Downloaded from http://www.everyspec.com



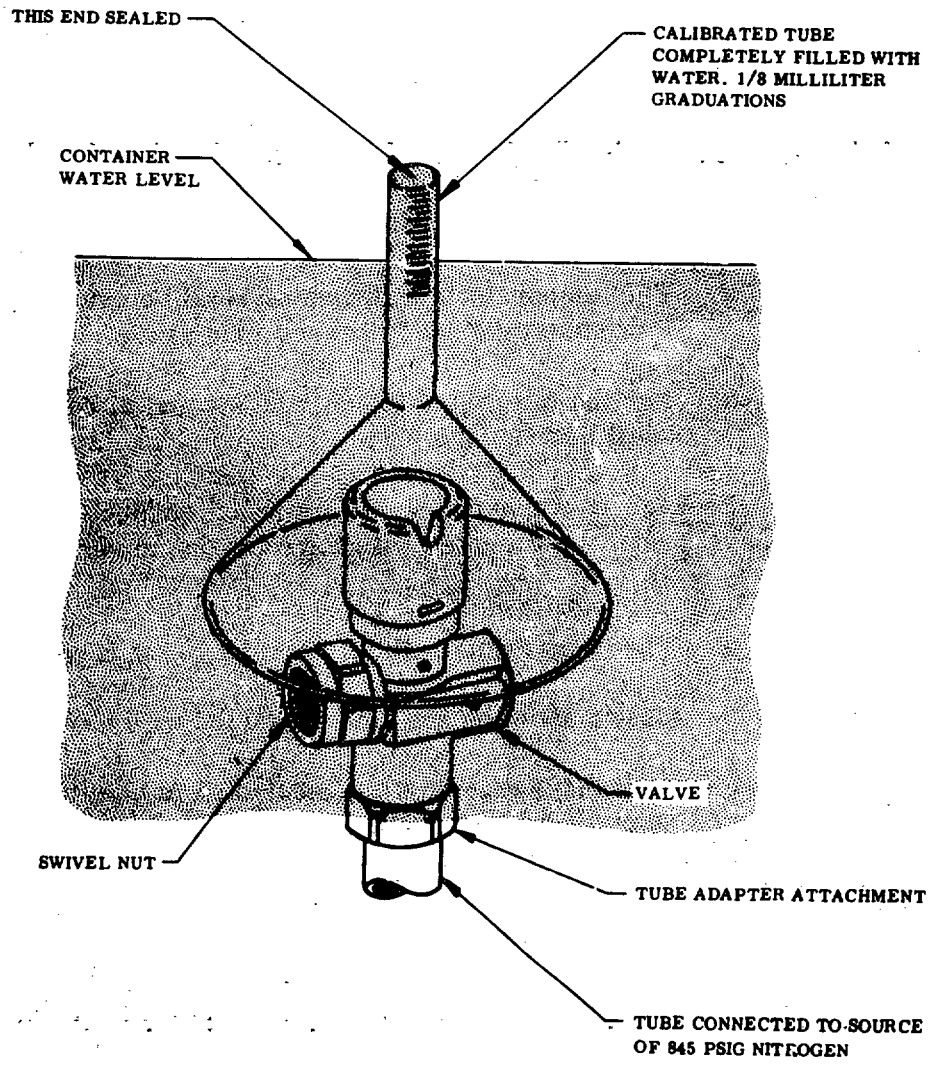


FIGURE 5. APPARATUS FOR DETERMINING LEAKAGE AT 70° F

Downloaded from http://www.everyspec.com



collection device. Suitable means shall be used to hold the collection device stationary. The valve shall be placed, in relation to the collection device, so that leakage, from any point of the valve, will be collected, by the displacement of the water, in the collection device. A collection device other than that shown in Figure 5, may be used.

4.7.2.1.2 Both closed positions. The leakage inspection procedure specified in 4.7.2.1.1 shall be repeated except that the inflation valve shall be tested twice, cocking on first one and then the other of the two opposite flats on the cam head.

4.7.2.2 At 160° F. The leakage inspection procedure specified in 4.7.2.1.1 shall be repeated with the following modifications:

a. The temperature of the water shall be 160 ±5 degrees Fahrenheit (71 ±2.8 degrees Centigrade).

b. For the alternate method, the applied nitrogen gas pressure shall be 2650 ±25 psig.

4.7.2.3 Leakage at minus 65° F. The leakage inspection procedure specified in 4.7.2.1.1 shall be repeated with the following modifications:

a. The immersion medium shall be 100 percent isopropyl alcohol.

b. This inspection shall be conducted with nitrogen (see 4.6.3).

c. This inspection shall be conducted in an atmosphere of minus 65 ±5 degrees Fahrenheit (-54 ±2.8 degrees Centigrade).

d. Nitrogen of 1000 psig shall be applied to the valve and the source of the pressure shall be completely shut off. The nitrogen at the valve shall be allowed to reach the ambient conditions and when the pressure has dropped to its minimum value, the pressure shall be further reduced manually to 100 psig. The pressure at the valve shall be maintained for a minimum of 30 minutes after temperature stabilization.

4.7.3 Operating force. The valve to be inspected shall be in the closed position and shall contain the spring clip, lanyard assembly, and diffuser. The force required to actuate the valve when pulling the cable parallel to the longitudinal axis of the valve shall meet the requirements of 3.5.2, using a device accurate to ±0.1 pound force.

Downloaded from http://www.everyspec.com



4.7.4 Operation.

4.7.4.1 At 70 degrees Fahrenheit. The valve to be inspected shall be in the closed position and shall not contain the spring clip or the diffuser, when applicable. A cocking tool may be substituted for the lanyard assembly. The inlet valve and an empty carbon dioxide cylinder shall be installed in the inflation valve and the cylinder shall be charged with carbon dioxide (see 4.6.2 and 4.6.4). The assembled inflation equipment shall be stabilized at 70 ±5 degrees Fahrenheit (21 ±2.8 degrees Centigrade). The assembled inflation equipment shall be weighed on a scale or balance to the nearest 0.01 of a pound. The carbon dioxide filled cylinder shall be securely restrained in a horizontal position and activated. Immediately at the end of 5 seconds, the time being recorded from the instant the carbon dioxide filled cylinder is activated, the valve shall be returned to the closed position, wiped dry, and the assembly reweighed to determine conformance to 3.5.3. The passage of the carbon dioxide gas into the atmosphere shall also be observed (see 3.5.3).

4.7.4.2 At minus 20 degrees Fahrenheit. The operation inspection at 70 degrees Fahrenheit procedure specified in 4.7.4.1 shall be repeated with the following modifications:

a. The assembled inflation equipment shall be exposed and inspected at minus 20 ±2 degrees Fahrenheit (-29 ±1 degrees Centigrade).

b. The carbon dioxide filled cylinder shall be securely restrained in a vertical position with the valve end down.

4.7.5 Endurance. The valve shall be actuated for 150 times with the lanyard assembly. A cylinder fitted with the $CO_2$ valve shall then be charged and discharged at room temperature through 10 complete cycles. The cylinder shall be charged with 0.5 pound $CO_2$ through the valve outlet; using standard recharging equipment. No difficulty shall be encountered in recharging through the valve outlet. During discharge, the inflation assembly shall be securely restrained and the diffuser installed. The valve shall show no evidence of malfunctioning or excessive wear during the test. The valve shall meet the requirements of 3.5.4, except that the valve shall not be inspected for conformance to 3.5.1, 3.5.2, and 3.5.3 after each actuation or cycle. After completion of the 10 cycles, the inflation valve shall be subjected to the following inspections, in the order listed:

| | |
|---|---|
| Leakage at 70 degrees Fahrenheit | (4.7.2.1) |
| Operating force | (4.7.3) |
| Operation at 70 degrees Fahrenheit | (4.7.4.1) |

4.7.6 Coupling nut torque. The inflation valve to be inspected shall be in the open position. The valve shall not contain the lanyard assembly, spring clip, and the diffuser. A plug, shall be attached to the coupling nut of the inflation valve with

Downloaded from http://www.everyspec.com



a torque of 25 foot pounds. The inflation valve shall then be submerged in water, at 70 ±5 degrees Fahrenheit (21 ±2.8 degrees Centigrade) and nitrogen gas pressure of 15 psig shall be applied to the inlet of the valve for a minimum of 60 seconds. While the pressure is applied, the inflation valve shall be observed for leakage (see 3.5.5). Upon completion of the aforementioned, the valve shall be removed from the water and, without making any adjustments, examined for conformance to 3.5.5.

4.7.7 Hydrostatic pressure of the frangible disc. The valve, in the closed position, shall be immersed in water, at a temperature of 160 ±5 degrees Fahrenheit (71 ±2.8 degrees Centigrade) for a minimum of 15 minutes. At the end of 15 minutes, with the valve at 160 ±5 degrees Fahrenheit, hydraulic pressure shall be applied at the valve inlet at a rate of approximately 100 psi per second until the disc ruptures. The valve shall conform to the requirements of 3.5.6.

4.7.8 Vibration. The valve to be inspected shall be in the closed position and shall contain the spring clip and the lanyard assembly. An empty carbon dioxide cylinder and diffuser shall be installed in the inflation valve and the cylinder shall be charged with carbon dioxide, see 4.6.2 and 4.6.4. The assembled inflation equipment shall be weighed on a scale or balance to the nearest 0.01 of a pound and then vibrated for 8 hours along each of the three mutually perpendicular axes of the valve (24 hours total vibration), at an amplitude of 0.060 inch and at a frequency of 10 to 55 cycles per second in one minute cycles. The inflation valve shall be securely restrained during vibration. This inspection may be conducted with or without any rest period between each of the 8 hour vibrations of the different planes. No adjustments shall be made to the assembled inflation equipment during this inspection. Upon completion of the vibration and without making any adjustment, the inflation equipment shall be reweighed and examined for conformity to 3.5.7. Upon completion of the reweighing and examination, the inflation valve shall be subjected to the following inspections, in the order listed:

| | |
|---|---|
| Leakage at 70 degrees Fahrenheit | (4.7.2.1) |
| Operating force | (4.7.3) |
| Operation at 70 degrees Fahrenheit | (4.7.4.1) |

4.7.9 Gravity drop inspection. The inflation valve assembly, see 3.4.1 and Figure 1, with a charged carbon dioxide cylinder, see 4.6.2 and 4.6.4, and diffuser installed shall be securely restrained in a sanitary jig or vise. The pull toggle of the lanyard assembly shall be positioned so that the loop end of the cable is exposed. One end of a 6 foot line shall be securely attached to the loop end of the cable and a 50 ±1/2 pound weight shall be securely attached to the other end of the line. The weight shall then be free fall dropped through a distance of 6 feet so that the full force of the accelerated mass is applied to the line and cable at the end of the drop. The inflation valve assembly shall be inspected for conformance to the requirements of 3.5.9, (excluding conformance to Leakage at 70 degrees Fahrenheit, Operating Force, and Operation at 70 degrees Fahrenheit). The inflation valve

Downloaded from http://www.everyspec.com



assembly shall be tested in each of the following positions (sequence mandatory): Vertical with the lanyard assembly down, horizontal, and vertical with the lanyard assembly uppermost. Upon completion of the final position test, the inflation valve assembly shall be inspected for conformance to all the requirements of 3.5.8.

4.7.10 Cycling. The valve to be inspected shall be in the closed position and shall contain the spring clip and the lanyard assembly. An empty carbon dioxide cylinder shall be installed in the inflation valve and the cylinder shall be charged with carbon dioxide, see 4.6.2 and 4.6.4. The cylinder, while attached to the inflation valve shall be charged and discharged with the lanyard assembly for 50 cycles. A cycle shall consist of one charge and one discharge. A cocking tool or any other suitable means may be used to cock the valve. The inflation assembly shall be securely restrained during cycling. During and after each discharge the inflation valve shall be examined for conformance to 3.5.8, except that the valve shall not be inspected for conformance to 3.5.1, 3.5.2, and 3.5.3 after each cycle. Only after the 50th discharge, the inflation valve shall be subjected to the following inspections, in the order listed:

| | |
|---|---|
| Leakage at 70 degrees Fahrenheit | (4.7.2.1) |
| Operating force | (4.7.3) |
| Operation at 70 degrees Fahrenheit | (4.7.4.1) |

4.7.11 Salt spray. The inflation valve to be inspected shall be in the closed position and shall contain the spring clip and lanyard assembly. An empty carbon dioxide cylinder, see 4.6.2 and 4.6.4, and diffuser shall be installed on the inflation valve, and the holes of the diffuser shall be sealed or plugged to prevent the entry of the salt spray. The assembled inflation equipment shall be exposed to salt spray for 100 hours in accordance with FED-STD-151, Method 811. The assembled inflation equipment shall be exposed in a horizontal position, simulating the position as when attached to the life raft. The assembled inflation equipment shall be exposed in such a manner that the salt atmosphere circulates completely around the inflation equipment. At the expiration of the salt spray exposure, the inflation equipment shall be removed and the salt spray washed off as specified in MIL-E-5272, Procedure I, without making any adjustments. Hot soapy water is an acceptable alternate method of washing off the salt spray. The outer surface of the inflation equipment shall be wiped dry and then hung up, in a manner that permits the atmospheric air to circulate completely around the inflation equipment for 48 ±1/2 hours. The inflation valve shall then be examined for conformity to 3.5.10. Upon completion of the examination, the valve shall be subjected to the following inspections in the order listed:

| | |
|---|---|
| Leakage at 70 degrees Fahrenheit | (4.7.2.1) |
| Operating force | (4.7.3) |
| Operation at 70 degrees Fahrenheit | (4.7.4.1) |

Downloaded from http://www.everyspec.com



4.7.12 Strength of the lanyard assembly cable and attachments. The ball shall be mounted in a suitably shaped jig having a hole of the proper size to clear the pull cable, but capable of holding the ball. A metal rod of proper size and strength shall be inserted through the loop of the pull cable. The jig shall be attached to a fixture of the type shown in Figure 6, of sufficient strength for this inspection, and a 100 pound weight shall be attached to the bottom of the test fixture. The weight shall be gradually applied to the lanyard assembly and shall hang freely for a minimum of 60 seconds. At the end of 60 seconds the weight shall be removed from the lanyard assembly. The lanyard assembly shall then be examined for conformity to 3.5.11. Test fixtures other than that shown in Figure 6 may be used. If a tensile testing machine is used, the jaws shall separate not more than 12 inches per minute (under no load conditions).

4.7.13 Weight. The weight of the inflation valve assembly (valve, spring clip, diffuser, cap, lanyard assembly, and seal washer) shall be determined to the nearest 0.01 pound. The weight of the assembly shall conform to the requirements of 3.5.12.

## 5. PREPARATION FOR DELIVERY

5.1 Packaging. Packaging shall be Level A or C, as specified, see 6.2.

5.1.1 Level A. The diffuser shall be fully inserted into the valve, with hand tightening. The valve inlet shall contain a plastic plug to prevent entry of foreign matter. The valve assembly shall be wrapped and cushioned with cellulosic material conforming to PPP-C-843, Type II, Class A or B, and inserted within a clear polyethylene bag, approximately 5-1/2 by 5-1/2 inches of 0.00125 ±20 percent inch thick material. Excess air shall be exhausted to the extent necessary to permit packaging of the bagged valve in the unit container.

5.1.1.1 Unit package. The bagged inflation valve, prepared as specified in 5.1.1, shall be inserted in a foil bag conforming to MIL-B-131 and packed conforming to MIL-B-117, Type II, Class E, Heat Sealing the Foil Bag.

5.1.1.2 Intermediate package. Twelve unit packages, bagged, cushioned, and packaged as specified in 5.1.1.1 shall be packaged within a snug fitting intermediate fiberboard container conforming to PPP-B-636, Type CF, Domestic Class, Variety SW, Grade 125. The boxes containing the valves shall be stacked in two tiers. The weight of the contents of the intermediate box shall not exceed 20 pounds. The containers shall be constructed and closed in accordance with the appendix to PPP-B-636. All the seams and joints shall be sealed with a minimum of 3 inch wide tape conforming to PPP-T-45, Type III, Grade A, B, or C.

5.1.2 Level C. The inflation valves shall be packaged to afford the minimum degree of protection necessary to prevent corrosion, deterioration, or damage

Downloaded from http://www.everyspec.com



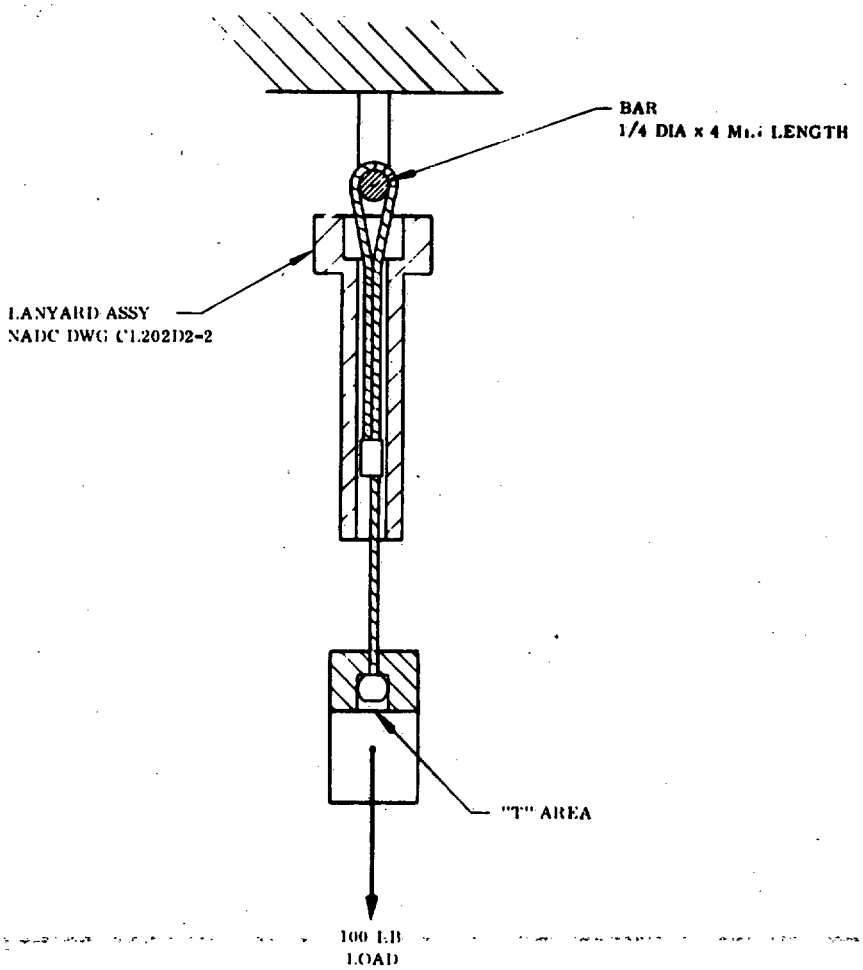


FIGURE 6. LANYARD PULL TEST

Downloaded from http://www.everyspec.com



during shipment under normal environmental conditions and commercial modes of transportation.

5.2 Packing. Packing shall be Level A, B, or C, as specified, see 6.2.

5.2.1 Level A. Four containers (forty-eight inflation valves) packaged as specified in 5.1.1.2, shall be packed as specified in 5.2.2, except that the container shall be Weather Resistant Class, Variety SW, Grade V3c or V3s. In addition, each container shall be constructed, closed, and reinforced with flat steel strapping or tape banding in accordance with the appendix to PPP-B-636.

5.2.2 Level B. Four containers (forty-eight inflation valves) packaged as in 5.1.1.2, shall be packed within a snug-fitting fiberboard shipping container conforming to PPP-B-636, Type CF or SF, Domestic Class, Variety SW, Grade 275. Gross weight shall not exceed 70 pounds. Each container shall be constructed and closed in accordance with the appendix to PPP-B-636.

5.2.3 Level C. The packaged inflation valves, which require packing for acceptance by the carrier, shall be packed within exterior type shipping containers in a manner that shall insure safe transportation at the lowest rate to the point of delivery. The containers shall conform to the minimum requirements of the Uniform Freight Classification rules and regulations applicable to the mode of transportation selected.

5.3 Marking. In addition to any special marking required by the contract or order, all unit, intermediate, and exterior shipping containers shall be marked in accordance with MIL-STD-129. The date of manufacture (month and year) and the contract or order number shall be indicated on all unit, intermediate, and exterior shipping containers.

## 6. NOTES

6.1 Intended use. The inflation valves covered by this specification are intended for use as a component of the mechanical inflation system for inflating the one man inflatable life rafts.

6.2 Ordering data. Procurement documents shall specify the following:

a. Title, number, and date of this specification

b. Quantity desired

c. Whether first article inspection is waived (see 4.4.1).

d. Name and address of the first article inspection laboratory (see 4.4.1)

Downloaded from http://www.everyspec.com



e. Selection of applicable levels of packaging and packing (see 5.1 and 5.2)

f. Whether any special markings are required (see 5.3)

g. Certificate of compliance for the age of age sensitive elastomers (see 3.3)

h. Whether alternate test equipment may be used for conducting tests (see 4.7.2.1, 4.7.2.2, and 4.7.12).

6.3 Qualification. With respect to products requiring qualification, awards will be made only for such products as have, prior to the time set for opening of bids, been tested and approved for inclusion in the applicable Qualified Products List, whether or not such products have actually been so listed by that date. The attention of suppliers is called to this requirement, and manufacturers are urged to arrange to have the products that they propose to offer to the Federal Government, tested for qualification in order that they may be eligible to be awarded contracts or orders for the products covered by this specification. The activity responsible for the Qualified Products List is the Commander, Naval Air Systems Command, Department of the Navy, Washington, DC 20360; however, authorization for qualification of products shall be the responsibility of the Commander, Naval Air Development Center, Warminster, Pennsylvania 18974. Attention: Code 4044. Prior to submission of the samples for qualification inspection, the manufacturer shall submit a request to the Naval Air Development Center indicating a date on which the samples can be forwarded and also request an authorization number to accompany the samples and the name and address where the samples are to be forwarded.

6.3.1 When requested, the manufacturer shall submit an inspection report in accordance with SD6, Provisions Governing Qualification.

6.4 Data. For the information of Contractors and Contracting Officers, any of the data specified in applicable documents listed in Section 2 of this specification, or referenced lower-tier documents need not be prepared for the Government and shall not be furnished to the Government unless specified in the contract or order. The data to be furnished shall be listed on DD Form 1423 (Contractor Data Requirements List), which shall be attached to and made a part of the contract or order. NavWeps Form 4200/25 (Drawings, Lists, and Specifications Required) shall be attached where applicable.

Preparing activity:
Navy - AS
(Project No. 4220-N220)

Downloaded from http://www.everyspec.com



INDEX


| CONTENTS | PARAGRAPH | PAGE |
|---|---|---|
| APPLICABLE DOCUMENTS | 2.1 and 2.2 | 1 and 3 |
| CLASSIFICATION OR LIST OF DEFECTS | | |
| Finished dimensions | Table VII | 21 |
| Preparation for delivery | Table VIII | 22 |
| Visual examination of the valves | Table VI | 20 |
| CLASSIFICATION OF INSPECTION | 4.2 | 13 |
| First article inspection | 4.2b. | 13 |
| Qualification inspection | 4.2a. | 13 |
| Quality conformance inspection | 4.2c. | 13 |
| DATA | 6.4 | 31 |
| DESIGN | 3.4 | 4 |
| General design requirements | 3.4.1 | 4 |
| Specific design requirements | 3.4.2 | 4 |
| Valve body | 3.4.2.1 | 4 |
| Cap | 3.4.2.6 | 8 |
| Coupling nut | 3.4.2.5 | 8 |
| Diffuser | 3.4.2.2 | 4 |
| Lanyard assembly | 3.4.2.7 | 8 |
| Screw threads | 3.4.2.8 | 8 |
| Spring clip | 3.4.2.3 | 4 |
| Washer (seal) | 3.4.2.4 | 8 |
| FIGURES | 1 through 3<br>4, 5 and 6 | 5 through 7<br>9, 23 and 29 |
| FIRST ARTICLE | 4.4 | 15 |
| Approva. | 4.4.3 | 15 |
| Inspection | 4.4.2 | 15 |
| Requirements | 3.2 | 3 |
| Samples | 4.4.1 and 4.4.2 | 15 |
| IDENTIFICATION OF PRODUCT | 3.6 | 12 |
| INSPECTION CONDITIONS | 4.6 | 19 |
| Atmospheric conditions | 4.6.1 | 19 |

Downloaded from http://www.everyspec.com



INDEX (Continued)


| CONTENTS | PARAGRAPH | PAGE |
|---|---|---|
| INSPECTION METHODS | 4.7 | 20 |
| Coupling nut torque | 4.7.6 | 25 |
| Cycling | 4.7.10 | 27 |
| Endurance | 4.7.5 | 25 |
| Gravity drop inspection | 4.7.9 | 26 |
| Hydrostatic pressure of the frangible disc | 4.7.7 | 26 |
| Leakage: | 4.7.2 | 22 |
| at -65° F | 4.7.2.3 | 24 |
| at 70° F | 4.7.2.1 | 22 |
| at 160° F | 4.7.2.2 | 24 |
| Operating force | 4.7.3 | 24 |
| Operation: | 4.7.4 | 25 |
| at -20° F | 4.7.4.2 | 25 |
| at 70° F | 4.7.4.1 | 25 |
| Salt spray | 4.7.11 | 27 |
| Strength of lanyard assembly cable and attachments | 4.7.12 | 27 |
| Vibration | 4.7.8 | 26 |
| Visual examination | 4.7.1 | 20 |
| Components and assembly | Table VI | 20 |
| Preparation for delivery | 4.7.1.2 | 21 |
| Weight | 4.7.13 | 28 |
| INTENDED USE | 6.1 | 30 |
| MATERIALS AND COMPONENTS | 3.3 | 3 |
| Dissimilar metals | 3.3.1.1 | 3 |
| Protective treatment | 3.3.2 | 3 |
| ORDERING DATA | 6.2 | 30 |
| PERFORMANCE INSPECTIONS | 3.5 | 8 |
| Requirements | 3.5.1 through 3.5.12 | 8 through 12 |
| PREPARATION FOR DELIVERY | 5 through 5.2.3 | 28 through 30 |
| Marking | 5.3 | 30 |
| Packaging | 5.1 | 28 |

Downloaded from http://www.everyspec.com



INDEX (Continued)


| CONTENTS | PARAGRAPH | PAGE |
|---|---|---|
| PREPARATION FOR DELIVERY (Continued) | | |
| Level A | 5.1.1 | 28 |
| Unit package | 5.1.1.1 | 28 |
| Intermediate package | 5.1.1.2 | 28 |
| Level C | 5.1.2 | 28 |
| Packing: | 5.2 | 28 |
| Level A | 5.2.1 | 28 |
| Level B | 5.2.2 | 30 |
| Level C | 5.2.3 | 30 |
| QUALIFICATION | | |
| Information | 6.3 | 31 |
| Inspection | 4.3.1.1 | 13 |
| Requirements | 3.1 | 3 |
| Samples | 4.3.1 | 13 |
| Verification (Retention) | 4.3.2 | 15 |
| QUALITY CONFORMANCE INSPECTION | 4.5 | 17 |
| Sampling: | 4.5.1 | 17 |
| Inspection lot: | 4.5.1.1 | 17 |
| Valves | 4.5.1.1.1 | 17 |
| Preparation for delivery | 4.5.1.1.2 | 17 |
| Sampling for examinations and tests of valves and preparation for delivery | 4.5.1.2 | 17 |
| RESPONSIBILITY FOR INSPECTION | 4.1 | 12 |
| SCOPE | 1.1 | 1 |
| WORKMANSHIP | 3.7 | 12 |

Downloaded from http://www.everyspec.com

# STANDARDIZATION DOCUMENT IMPROVEMENT PROPOSAL

OMB Approval No. 22-R255

INSTRUCTIONS: The purpose of this form is to solicit beneficial comments which will help achieve procurement of suitable products at reasonable cost and minimum delay, or will otherwise enhance use of the document. DoD contractors, government activities, or manufacturers/vendors who are prospective suppliers of the product are invited to submit comments to the government. Fold on lines on reverse side, staple in corner, and send to preparing activity. Comments submitted on this form do not constitute or imply authorization to waive any portion of the referenced document(s) or to amend contractual requirements. Attach any pertinent data which may be of use in improving this document. If there are additional papers, attach to form and place both in an envelope addressed to preparing activity.

DOCUMENT IDENTIFIER AND TITLE

MIL-V-81722A(AS) VALVE, INFLATION, LIFE RAFT, FLU-6/P

NAME OF ORGANIZATION AND ADDRESS

CONTRACT NUMBER

MATERIAL PROCURED UNDER A

☐ DIRECT GOVERNMENT CONTRACT ☐ SUBCONTRACT

1. HAS ANY PART OF THE DOCUMENT CREATED PROBLEMS OR REQUIRED INTERPRETATION IN PROCUREMENT USE?
   A. GIVE PARAGRAPH NUMBER AND WORDING.

   B. RECOMMENDATIONS FOR CORRECTING THE DEFICIENCIES

2. COMMENTS ON ANY DOCUMENT REQUIREMENT CONSIDERED TOO RIGID

3. IS THE DOCUMENT RESTRICTIVE?

   ☐ YES ☐ NO (If "Yes", in what way?)

4. REMARKS

SUBMITTED BY (Printed or typed name and address - Optional)

TELEPHONE NO.

DATE

DD FORM 1 JAN 72 1426

REPLACES EDITION OF 1 JAN 66 WHICH MAY BE USED

Source: http://assist.dla.mil Downloaded: 2020 05 21T18:21Z