Downloaded from http://www.everyspec.com

MIL-V-25023B
Amendment -2
8 JULY 1969
Superseding
Amendment -1
14 March 1969

MILITARY SPECIFICATION

VALVE, FUEL DRAIN, SELF-LOCKING

This amendment forma A part of Military Specification MIL-V-25023B, 17 August 1967, and is mandatory for use by all Departments and Agencies of the Department of Defense.

Page 7, paragraph 4.6.2.1.1, delete, and substitute:

"4.6.2.1.1 Flow. - The valve shall be installed in a container conforming to figure 1, 2, or 3 as applicable. The container shall be filled with the appropriate quantity of type I TT-S-735 fluid. For MS29571 valves (figure 3) fill the test container to the top of the gage block, then add the quantity of test fluid specified in the table. The valve shall be placed in the open position and the time started. For M529528, MS29529, and MS29530 valves, the recording of time shall stop when the flow breaks from a continuous stream to droplets. For MS29571 valves, the recording of time shall stop when the liquid level leaves the top surface of the gage block. The time shall not exceed that shown on the table of the applicable figure."

Page 8, figure 1: Delete, and substitute attached figure 1. Figure 1 forms page 2 of this amendment.

Page 9, figure 2: Delete, and substitute attached figure 2. Figure 2 forms page 3 of this amendment.

Page 10, figure 3: Delete, and substitute attached figure 3. Figure 3 forms page 4 of this amendment.

Custodians :
Army - AV
Navy - AS
Air Force - 11

Reviewer activities:
Army - AV
Navy - AS
Air Force - 82

Preparing activity:
Air Force - 11

Project No. 2915-0059

FSC 2915

Downloaded from http://www.everyspec.com

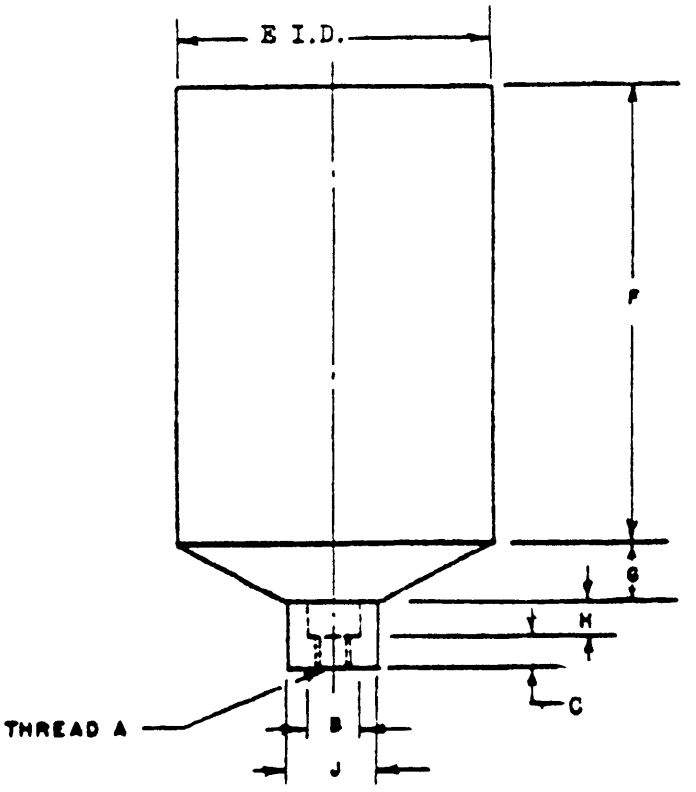

THREAD A	B	C	E	F	G	H	J	QUANTITY OF TEST FLUID	TIME TO DRAIN (SEC)
7/16 -20 UNF -3B	0.625	0.312							65
9/16-18 UNF-3B	0.750	0.312	4.00	8.00	0.75	0.50	1.00	1,000CC	65
3/4 -16 UNF-3B	0.750	0.375							28
1-1/16-12 UN-3B	1.250	0.500							78
1-5/16-12 UN-3B	1.500	0.500	10.00	13.00	2.13	1.00	2.28	5 GAL.	40
1-5/8 -12 UN-3B	1.750	0.500							33
1-7/8 -12 UN-3B	2.000	0.500							31

DIMENSIONS IN INCHES. TOLERANCES: 2-PLACE DECIMALS ±.03, 3-PLACE DECIMALS ±.010.

Figure 1. Flow test containers for MS29529 and MS29530 valves

Downloaded from http://www.everyspec.com

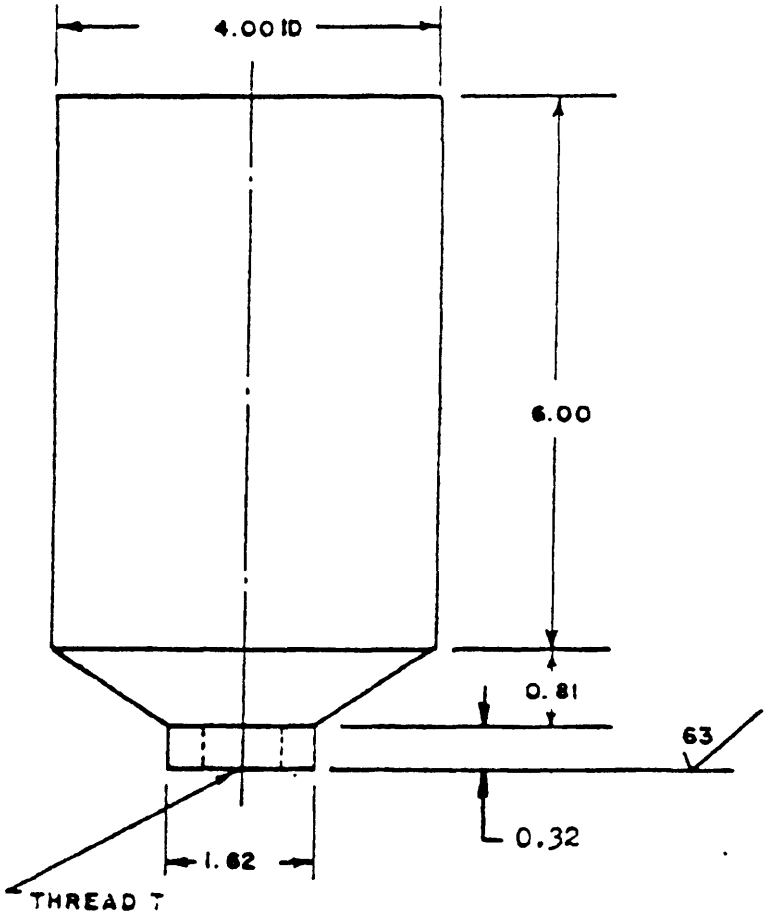

VALVE PART NO.	THREAD T	TIME TO DRAIN (SEC)	QUANTITY OF TEST FLUID
MS 29528-1	7/16-20 UNF 3B	85	1,000 CC
MS29528 - 2	9/16-18 UNF 3B	65	1,000 CC
MS 29528 - 3	3/4-16 UNF 3B	25	1,000 CC

DIMENSIONS IN INCHES
TOLERANCES: 2-PLACE DECIMALS ±.03
SURFACE TEXTURE: USAS B46.1 -1962

Figure 2. Flow test container for MS29528 valves

Downloaded from http://www.everyspec.com

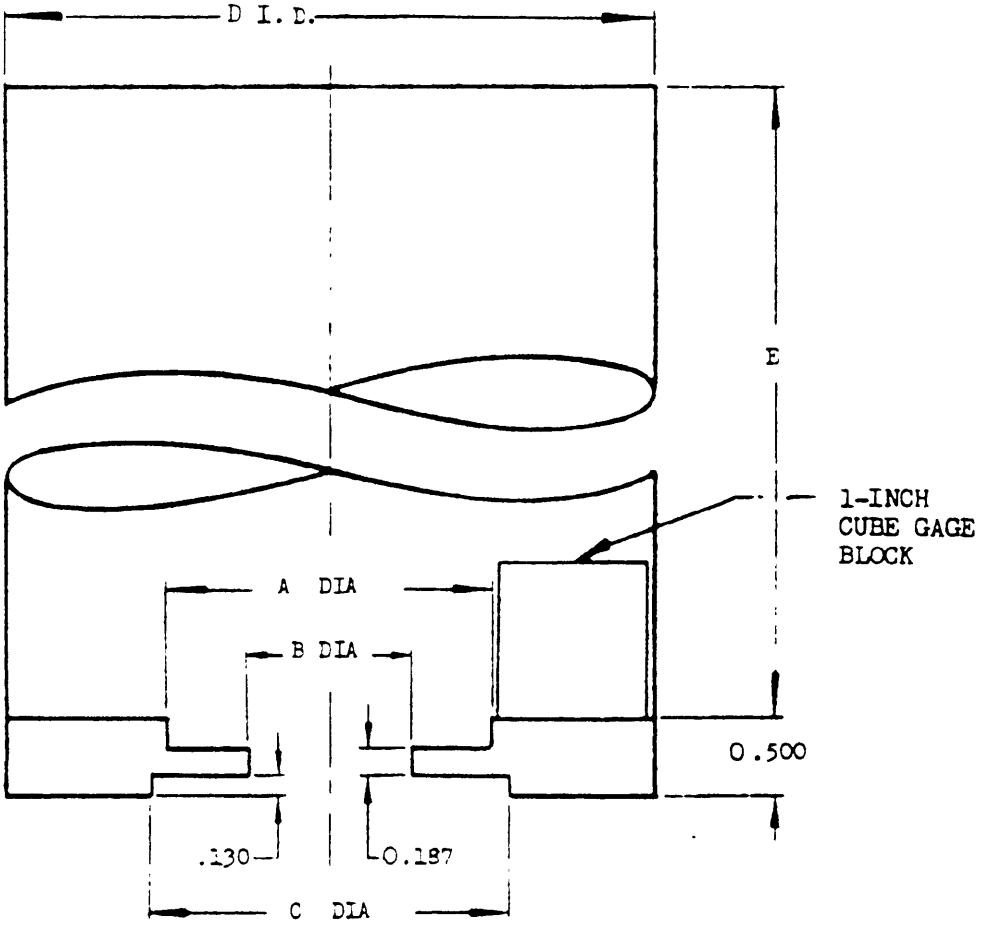

MS PART NO.	A	B	C	D	E	TIME TO DRAIN (SEC)	QUANTITY OF TEST FLUID
MS29571-1	1.490	0.875	1.588	4.00	6.00	20	1,000 CC
MS29571-2	1.990	1.187	1.900	10.00	15.00	75	4.5 GAL.
MS29571-3	2.240	1.437	2.150	10.00	15.00	55	4.5 GAL.
MS29571-4	2.490	1.635	2.463	10.00	15.00	35	4.5 GAL.

Figure 3. Flow test containers for MS29571 valves

☆ U. S. GOVERNMENT PRINTING OFFICE: 1980-393-065/5-1672

Downloaded from http://www.everyspec.com

SPECIFICATION ANALYSIS SHEET

Form Approved Budget
Bureau No. 119-R004

INSTRUCTIONS

This sheet is to be filled out by personnel either Government or contractor, involved in the use of the specification in procurement of products for ultimate use by the Department of Defense. This sheet is provided for obtaining information on the use of this specification which will insure that suitable products can be procured with a minimum amount of delay and at the least cost. Comments and the return of this form will be appreciated. Fold on lines on reverse side, staple in corner, and send to preparing activity.

SPECIFICATION MIL-V-25023B (Amend -2) VALVE, FUEL DRAIN, SELF-LOCKING

ORGANIZATION	CITY AND STATE

CONTRACT NO.	QUANTITY OF ITEMS PROCURED	DOLLAR AMOUNT $

MATERIAL PROCURED UNDER A

( ) Direct Government Contract ( ) Subcontract

1. HAS ANY PART OF THE SPECIFICATION CREATED PROBLEMS OR REQUIRED INTERPRETATION IN PROCUREMENT USE?

   A. GIVE PARAGRAPH NUMBER AND WORDING.

   B. RECOMMENDATIONS FOR CORRECTING THE DEFICIENCIES.

2. COMMENTS ON ANY SPECIFICATION REQUIREMENT CONSIDERED TOO RIGID.

3. IS THE SPECIFICATION RESTRICTIVE?

   ( ) YES ( ) NO IF "YES", IN WHAT WAY?

4. REMARKS (Attach any pertinent data which may be of use in improving this specification. If there are additional papers, attach to form and place both in an envelope addressed to preparing activity.)

SUBMITTED BY (Printed or typed name and activity) DATE

DD Form 1426