MIL-T-52777A
6 July 1978
SUPERSEDING
MIL-T-52777
21 February 1974

MILITARY SPECIFICATION

TANKS, STORAGE, UNDERGROUND, GLASS FIBER REINFORCED PLASTIC

This specification is approved for use by all Departments and Agencies of the Department of Defense.

1. SCOPE

1.1 Scope. This specification covers underground storage tanks of polyester resin and glass fiber reinforcement for the storage of petroleum and liquid products together with pertinent accessories for the tanks.

1.2 Classification. The reinforced plastic tanks shall be of the following types, classes, and specific liquid to be stored as specified (see 6.2):

Type I - 150° F (66° C).
Type II - 200° F (93° C).
Class A - Vented.
Class B - Maximum 5 pounds per square inch (psi) Working Pressure.

FSC 5430

Beneficial comments (recommendations, additions, deletions) and any pertinent data which may be of use in improving this document should be addressed to: US Army Mobility Equipment Research and Development Command, ATTN: DRDME-DS, Fort Belvoir, VA 22060 by using the self-addressed Standardization Document Improvement Proposal (DD Form 1426) appearing at the end of this document or by letter.

2. APPLICABLE DOCUMENTS

2.1 Issues of documents. The following documents of the issue in effect on date of invitation for bids or request for proposal form a part of this specification to the extent specified herein.

SPECIFICATIONS

FEDERAL

PPP-B-601	- Boxes, Wood, Cleated-Plywood.

MILITARY

MIL-R-7575	- Resin, Polyester, Low Pressure Laminating.
MIL-P-17549	- Plastic Laminates, Fibrous Glass Reinforced, Marine Structural.
MIL-R-46068	- Resin, Polyester, Bisphenol - A Type.

STANDARDS

MILITARY

MIL-STD-105	- Sampling Procedures and Tables for Inspection by Attributes.
MIL-STD-129	- Marking for Shipment and Storage.
MIL-STD-130	- Identification Marking of US Military Property.
MIL-STD-1188	- Commercial Packaging of Supplies and Equipment.
MIL-STD-1472	- Human Engineering Design Criteria for Military Systems, Equipment, and Facilities.

(Copies of specifications and standards required by contractors in connection with specific procurement functions should be obtained from the procuring activity or as directed by the contracting officer.)

2.2 Other publications. The following documents form a part of this specification to the extent specified herein. Unless otherwise indicated, the issue in effect on date of invitation for bids or request for proposal shall apply.

AMERICAN NATIONAL STANDARDS INSTITUTE, INC. (ANSI)

B16.3 - Malleable-Iron Threaded Fittings, 150 and 300 Pound.

(Application for copies should be addressed to the American National Standards Institute, Inc., 1430 Broadway, New York, NY 10018.)

AMERICAN SOCIETY OF MECHANICAL ENGINEERS (ASME)

Boiler and Pressure Vessel Code, Section X.

(Application for copies should be addressed to the American Society of Mechanical Engineers, 345 East 47th Street, New York, NY 10017.)

NATIONAL BUREAU OF STANDARDS (NBS)

Handbook H28 - Screw-Thread Standards for Federal Services.

(Application for copies should be addressed to the Superintendent of Documents, U.S. Government Printing Office, Washington, DC 20402.)

OCCUPATIONAL SAFETY AND HEALTH ACT OF 1970 (OSHA)

Title 29, Code of Federal Regulations, Part 1910.106, Flammable and Combustible Liquids.

(Application for copies should be addressed to the Superintendent of Documents, U.S. Government Printing Office, Washington, DC 20402.)

UNDERWRITERS' LABORATORIES, INC. (UL)

UL 58 - Steel Underground Tanks for Flammable and Combustible Liquids.

(Application for copies should be addressed to the Underwriters' Laboratories, Inc., 207 East Ohio Street, Chicago, IL 60611.)

(Technical society and technical association specifications and standards are generally available for reference from libraries. They are also distributed among technical groups and using Federal agencies.)

3. REQUIREMENTS

3.1 Description. The underground storage tanks (hereinafter called "tanks") shall be of glass fiber reinforced plastic.

3.1.1 Sizes. Nominal tank sizes shall be 48,000, 40,000, 30,000, 25,000, 20,000, 15,000, 12,000, 10,000, 8,000, 6,000, 4,000, 2,000, 1,500, 1,300, 1,000, 850, and 550 gallon capacities, as specified (see 6.2), and shall conform to the dimensions shown on Figure 1 (see 6.6).

3.2 First article (preproduction model). The contractor shall furnish one or more tanks as specified (see 6.2) for examination and testing within the time frame specified (see 6.2) to prove prior to starting production that his production methods and choice of design detail will produce tanks that comply with the requirements of this specification. Examination and tests shall be as specified in Section 4 and shall be subject to surveillance and approval of the Government (see 6.3).

3.3 Material. Material shall be as specified herein. Materials not specified shall be selected by the contractor and shall be subject to all provisions of this specification (see 6.4). Items performing the same function shall be products of the same manufacturer.

3.3.1 Plastic laminate. The plastic laminate shall conform to MIL-P-17549, Grade 3, and shall be resistant to the liquid to be stored and shall not have a deleterious effect upon the liquid. The resin shall not be pigmented and the laminate shall be translucent.

3.3.2 Glass fiber reinforcement. The glass fiber reinforcement used in the tank shall conform to MIL-P-17549.

3.3.3 Resin. Resin shall be determined by the Type, Class, and Service of the tank and its intended corrosive environment (see 3.8, 3.9, 3.10, and 3.11).

3.4 Design. The design shall prevent conditions which may be hazardous to personnel or deleterious to associated environments when the tank is installed and used as specified. All tanks shall be provided with openings and connection fitting of the size, type, and in the location specified (see 6.2), for fill, discharge, vent, liquid indications, controls, heating coils, and manholes, in accordance with the applicable rules and standards specified herein. Reinforcements around openings shall be sufficient to more than compensate for the material removed and shall conform to applicable standards.

3.5 Safety. The tanks shall conform to the OSHA Part 1910.106 (Flammable and Combustible Liquids), applicable standards for safety or the Underwriters' Laboratories, Inc., when storing flammable petroleum products, or ASME, when used as a Class B tank. Acceptable evidence shall include the UL label in accordance with UL 58, a photostatic copy of the UL listing card, or listing in a specifically identified, current, UL approved directory. For Class A tanks acceptable evidence shall be provided, and Class B tanks shall be in accordance with ASME Boiler and Pressure Vessel Code, Section X.

3.6 Interchangeability. All tanks of the same classification, furnished with similar options, shall be identical to the extent necessary to insure interchangeability of component parts, assemblies, accessories, and repair parts. All threaded parts shall conform to NBS H28.

3.7 Construction.

3.7.1 Factory fabrication. The tank shall be completely factory fabricated. The tank may be made up of one or more sections bonded together to form the complete unit. Any sealing materials used shall be impervious to and chemically resistant to the liquid to be stored.

3.7.2 Tank shell and external or internal stiffening. Tank shell and external or internal stiffening shall be designed to limit deflection and withstand deflection when tested in accordance with 4.5.2.3.

3.7.3 Components. The tank assembly may contain metallic or nonmetallic components of materials other than the basic materials of tank construction determined in 3.3 but in all cases these components shall meet the same requirements for chemical compatibility.

3.7.4 Lifting lugs. One or more lifting lugs shall be provided on each tank and shall support the empty weight of the tank with a safety factor of not less than 2 to 1.

3.7.5 Tank openings. The tank openings shall be designed and located in such a manner as to maintain the strength of the original uncut panel. The location and size of the tank openings shall be as specified (see 6.2). All openings shall be fabricated by the manufacturer's commercial method.

3.7.5.1 Pipe connections. Pipe connections to tanks shall be as specified in 3.7.5.

3.7.5.1.1 Threaded fittings. Tanks requiring UL labels shall have double 2 inch and double 4 inch fittings located between the same two reinforcing ribs perpendicular to the center line of the tank, and all single fittings aligned along the top center of the tank. Fittings shall be designed to withstand stresses in accordance with Table I when installed in tank (see Figure 2).

TABLE I. Bending and torque requirements.

Requirement	Under 4 inch	4 inch and over
Bending	2000 ft-lbs	2000 ft-lbs
Torque	83 ft-lbs	295 ft-lbs

3.7.5.1.2 Flanged fittings. Tanks requiring UL label shall have all flanged fittings aligned along top-center of tank. All flanged nozzles 8 inches diameter or less shall be conically gusseted and designed to withstand 1500 ft-lbs bending and 2000 ft-lbs torque when installed in the tank. Boltholes shall be accurately drilled with all burrs removed. All flanged fittings shall conform to ANSI B16.3, 150 pound class for UL labeled tanks and others shall be as specified (see 6.2).

3.7.5.2 Baffles. When specified (see 6.2), baffles or internal compartment walls may be required for specific uses, and when so required, shall meet the requirements of 3.4 and 3.7.2.

3.7.5.2.1 Baffle arrangement. The baffle arrangement shall provide for complete access to the inside of all portions of the tank by means of access holes, or additional manholes shall be provided to give such access. Baffles shall not interfere with the required manholes, tank connectors, or internal piping.

3.7.5.3 Manholes. Manholes shall be 30 inches in diameter for tanks up to 12,000 gallons, and 36 inches in diameter for tanks over 12,000 gallons. Manholes shall also meet the requirements of 3.4 and 3.5.

3.7.5.4 Hotwells and coils. When specified (see 6.2), internal hotwells or heating coils (generally required on Type I, Class A tanks for fuel oils) shall be furnished. Coils shall be independently supported by lugs or brackets and shall not come in contact with tank walls. Materials of construction shall meet requirements of 3.3.

3.7.5.5 Fill pipe. Fill pipe shall be reinforced plastic construction conforming to Figure 2.

3.7.5.6 Access ladders. When specified (see 6.2), ladders shall be provided. All ladders shall conform to the material in 3.3, and mounted with lugs and brackets. The design of the ladders shall conform to MIL-STD-1472.

3.7.6 Dimensions. Dimensions shall be as specified (see 6.2), and as shown in Figure 1.

3.7.7 Hold down strap. Provisions shall be made for preformed hold down straps to secure the tank against action of buoyant forces. The straps shall conform to Figure 3.

3.7.8 Tank marking. The following information shall be indelibly marked on manhole cover of each tank in accordance with MIL-STD-130:

(a) Specification number.
(b) Type, class, and grade.
(c) Maximum working pressure, 5 psi (when applicable).
(d) Product storage, temperature, and specific gravity.
(e) Manufacturer's name.
(f) Date of manufacture.
(g) UL number and label or ASME approval (as applicable).

3.8 Type I tank. Type I tanks and accessories shall be for service up to 150° F (66° C) and the resin shall conform to MIL-R-7575, Grade A, Class 0.

3.9 Type II tank. Type II tanks and accessories shall be for service up to 200° F (93° C) and the resin shall conform to MIL-R-46068.

3.10 Class A tank. Design and fabrication of Class A tanks shall conform to the following criteria:

(a) Tanks shall be suitable for only fully vented service.
(b) Resin system shall be chemically suitable for the intended environment.
(c) Tanks shall be designed to withstand external hydrostatic working pressures equivalent to an 11-foot head of water over bottom of tank with a 3 to 1 safety factor.
(d) Tanks shall be designed to withstand extended earth pressures equivalent to 3 feet of earth over the top of the tank with a 2 to 1 safety factor.
(e) Tanks with a minimum of 2 foot cover shall withstand concentrated surface loads of 16,000 pounds over a 16- x 20-inch area when buried with a 2 to 1 safety factor.
(f) Tanks up to 10 feet in diameter shall withstand maximum internal air test pressure of 5 psi; tanks 12 feet in diameter shall withstand maximum internal air test pressure of 3 psi.
(g) Tanks shall withstand fluid loads of liquids up to 1.4 specific gravity.

3.11 Class B tanks. Design and fabrication of pressure tanks shall conform to the ASME Boiler and Pressure Vessel Code, Section X for working pressure of 5 psi as specifically pertains to fiberglass reinforced plastic vessels. Pressure relief devices shall be provided with pressure relief setting suitable for the 5 psi working pressure specified.

3.12 Workmanship. All finished tanks shall exhibit uniform quality, and be free from loose fibers, indentations, crazes, cracks in tank wall, blisters, dirt, and black marks.

3.12.1 Interior surfaces. Particular care shall be taken with all interior tank surfaces. The surfaces of laminates shall be resin rich, nonporous, and shall show no evidence of exposed, loose projecting, or lightly bonded fibers. All holes shall be carefully cut to prevent delamination. All cut edges exposed to product stored or ground soil shall be coated with a suitable resin. When specified (see 6.2), all joints shall be sealed both internally and externally with lay-ups of resin and glass mat. Inside surfaces of tanks shall be clean and free from all foreign matter such as thread compound, loose overlay, glass fibers, dirt, and dust.

4. QUALITY ASSURANCE PROVISIONS

4.1 Responsibility for inspection. Unless otherwise specified in the contract, the contractor is responsible for the performance of all inspection requirements as specified herein. Except as otherwise specified in the contract, the contractor may use his own or any other facilities suitable for the performance of the inspection requirements specified herein, unless disapproved by the Government. The Government reserves the right to perform any of the inspections set forth in the specification where such inspections are deemed necessary to assure supplies and services conform to prescribed requirements.

4.1.1 Component and material inspection. The contractor is responsible for insuring that components and materials used are manufactured, examined, and tested in accordance with referenced specifications and standards.

4.2 Classification of inspections. The inspection requirements specified herein are classified as follows:

(a) Preproduction inspection (see 4.3).
(b) Quality conformance inspection (see 4.4).
(c) Inspection of packaging (see 4.6).

4.3 Preproduction inspection.

4.3.1 Examination. The preproduction tank shall be examined as specified in 4.5.1. Presence of one or more defects shall be cause for rejection.

4.3.2 Tests. The preproduction tank shall be tested as specified in 4.5.2 through 4.5.2.5.3. Failure of any test shall be cause for rejection.

4.4 Quality conformance inspection.

4.4.1 Sampling. Sampling for examination and tests shall be in accordance with MIL-STD-105.

4.4.2 Examination.

4.4.2.1 Samples. Samples selected in accordance with 4.4.1 shall be examined for the major and minor defects specified in 4.5.1. AQL shall be 4.0 percent defective for major defects and 6.5 percent defective for minor defects.

4.4.3 Tests.

4.4.3.1 Samples. Samples selected in accordance with 4.4.1 shall be tested as specified in 4.5.2 through 4.5.2.5.3. AQL shall be 4.0 percent defective.

4.5 Inspection procedure.

4.5.1 Examination. The tanks shall be examined as specified herein for the following defects:

Major

101. Size and capacity not as specified.
102. Material not as specified.
103. Openings and connection fittings not as specified or not located as specified.
104. Components not as specified.
105. Lifting lugs missing or not as specified.
106. Threaded and flanged fittings not as specified.
107. Baffles not as specified.
108. Boltholes not as specified.
109. Manholes not as specified.
110. Hotwells and coils not as specified.
111. Fill pipe not as specified.
112. Access ladders not as specified.
113. Dimensions not as specified.
114. Workmanship not as specified.

Minor

201. Identification marking missing, incomplete, or illegible.

4.5.2 Tests. Tests which are specified at "room temperature" are to be accomplished under normal room conditions with the temperature not less than 60° F (16° C) or not more than 120° F (49° C). This will allow testing to be done in areas which do not have room temperature control. Preparatory to load and hydrostatic tests, pipe and bolt fitting openings shall be closed off with threaded plugs and flanged fittings with blind flanges and gaskets.

4.5.2.1 Flammable service. To qualify tanks for flammable service, the contractor shall submit to the contracting officer for approval certification by the Underwriters' Laboratories that the tank has a UL label for underground storage of flammable liquid and has undergone tests by that agency for such service.

4.5.2.2 Buried strength. Bury tank with top of tank 3 feet below ground level, with support under each end of tank only. (Void area under the tank is to be approximately 40 percent length of tank and two-thirds of its width.) Completely fill tank with water. Evidence of cracks, rupture, or damage to the internal shell within 1 hour of tank being full shall constitute failure of this test. Empty water from tank and repeat test with the tank supported at the center only. (Void under each end is to be approximately 20 percent of length of tank and two-thirds of its width.) Evidence of cracks, rupture, or damage to the internal shell within 1 hour of tank being full shall constitute failure of this test.

4.5.2.3 Concentrated load. Install tank as specified in 4.5.2.2 with support under the center of the tank only. Replace a 3-foot wide by 1-foot deep portion of the fill across the center of the tank with No. 8 crushed stone. Place an 18- by 20-inch by 1/2-inch thick steel plate on top of the fill, and hydraulically load plate to simulate a load of not less than 23,400 pounds (lbs). Any evidence of cracks, rupture, or damage to the internal shell of tank or permanent deflection of over 1/16-inch, at either end of the tank, shall constitute failure of this test.

4.5.2.4 External hydrostatic pressure. The test shall start with installing empty tank in hole, anchored as specified in 3.7.7, and back-filled with sand or material approved in current contractor's testing procedure. Flood the area around the tank so as to raise the water level in the hole to 3 feet above the top of the tank. The test shall last for a 24 hour period. Evidence of leakage of water into the tank shall constitute failure of this test.

4.5.2.5 Proof pressure.

4.5.2.5.1 Class A tanks. Pressurize the tank with air in accordance with 3.10 at ambient temperature and retain under specified pressure for not less than 5 minutes. Any evidence of delamination or leakage shall constitute failure of this test.

4.5.2.5.2 Class B tanks. Fill tank completely with water and pressurize at 1-1/2 times the working pressure. Test at ambient temperature, and retain tank under specified pressure for not less than 5 minutes. Evidence of delamination or leakage shall constitute failure of this test.

4.5.2.5.3 Hold down straps. Subject each strap design test model, each to be a minimum of 18-inches long and fabricated of fiberglass and resin materials with cross-sectional area and end fixtures identical with production model straps, to a tensile load until failure. Failure of the strap or a strap component at less than four times the work load, shown in Table II and based on tank size and number of straps per tank, shall constitute failure of this test.

TABLE II. Hold down strap.

Nominal tank size in gallons	Number of straps	Anchor points	Working load per anchor point (pounds)
550	2	4	1,200
850	2	4	2,000
1,000	2	4	2,000
1,300	2	4	2,500
1,500	2	4	2,700
2,000	2	4	4,500
4,000	2	4	8,500
6,000	2	4	12,000

TABLE II. Hold down strap. - Continued

Nominal tank size in gallons	Number of straps	Anchor points	Working load per anchor point (pounds)
8,000	4	8	8,000
10,000	4	8	10,000
12,000	4	8	12,000
15,000	4	8	16,000
20,000	6	12	14,000
25,000	8	16	13,000
30,000	10	20	13,000
40,000	12	24	14,000
48,000	16	32	12,500

4.6 Inspection of packaging.

4.6.1 Quality conformance inspection of pack.

4.6.1.1 Unit of product. For the purpose of inspection, a completed pack prepared for shipment shall be considered a unit of product.

4.6.1.2 Sampling. Sampling for examination shall be in accordance with MIL-STD-105.

4.6.1.3 Examination. Samples selected in accordance with 4.6.1.2 shall be examined for the following defects. AQL shall be 2.5 percent defective.

115. Unattached accessories, not consolidated as specified for Level A or Level B.
116. Boxes not as specified for Level A or Level B.
117. Tanks not provided with cradles as specified for Level A.
118. Marking missing, illegible, incorrect, or incomplete.

5. PACKAGING

5.1 Preservation. Preservation shall be Level A, Level B, or Commercial as specified (see 6.2).

5.1.1 Level A. Accessories not attached to the storage tank shall be consolidated together in one or more close-fitting boxes, as applicable, conforming to PPP-B-601, Overseas type, Style I. The contents shall be immobilized within the box in a manner to prevent free movement. Box closure shall be in accordance with the appendix to the box specification. Strapping shall not be required.

5.1.2 Level B. Preservation shall be as specified in 5.1.1 for Level A except the box shall be Domestic type.

5.1.3 Commercial. Accessories not attached to the storage tank shall be preserved in accordance with MIL-STD-1188.

5.2 Packing. Packing shall be Level A or Commercial as specified (see 6.2).

5.2.1 Level A. Each tank, with accessories preserved as specified in 5.1, shall be provided with cradles. The cradles shall remain with the tanks and may be attached to the tanks with strapping to assist in the handling and storage of the tanks.

5.2.2 Commercial. Each tank, with accessories preserved as specified in 5.1, shall be packed in accordance with MIL-STD-1188.

5.3 Marking.

5.3.1 Military packaging. Marking shall be in accordance with MIL-STD-129.

5.3.2 Commercial packaging. Marking shall be in accordance with MIL-STD-1188.

6. NOTES

6.1 Intended use. The tanks are intended for storage of petroleum or other liquid products underground.

6.2 Ordering data. Procurement documents should specify the following:

(a) Title, number, and date of this specification.
(b) Type, class or tank required, and specific liquid to be stored (see 1.2).

(c) Size of tank required (see 3.1.1).
(d) Time frame required for the submission of the preproduction model and number of tanks required (see 3.2).
(e) Location, size, and type of tank openings and fittings required (see 3.4 and 3.7.5).
(f) When flanged fittings shall be other than specified in ANSI B16.3 (see 3.7.5.1.2).
(g) When baffles are required (see 3.7.5.2).
(h) When hotwells and coils are required (see 3.7.5.4).
(i) Access ladder when specified (see 3.7.5.6).
(j) Dimensions required (see 3.7.6).
(k) When joints shall be sealed both internally and externally (see 3.12.1).
(l) Degree of preservation and degree of packing required (see 5.1 and 5.2).

6.3 Preproduction model. Any changes or deviations of production tanks from the approved preproduction model during production will be subject to the approval of the contracting officer. Approval of the preproduction model will not relieve the contractor of his obligation to furnish tanks conforming to this specification.

6.4 Recycled material. It is encouraged that recycled material be used, when practical, as long as it meets the requirements of this specification (see 3.3).

6.5 Data requirements. The contracting officer should include requirements for such data as technical publications, instructional materials, illustrated parts lists, and contractor's maintenance and operation manual to be furnished with each tank.

6.6 Provisioning. The contracting officer should include provisioning requirements for repair parts and maintenance tools as necessary (including any special tools), and instructions regarding shipment of tanks.

6.7 Information figures. Figures 1 and 3 show the nominal dimensions and capacities. The figures are included for illustration only and are not intended to preclude the furnishing of other configuration tanks which conform to this specification.

Custodians:
Army - ME
Navy - YD
Air Force - 99

Review activity:
DLA - CS

User activity:
Army - AT, AV, CE

Preparing activity:
Army - ME

Project 5430-0118

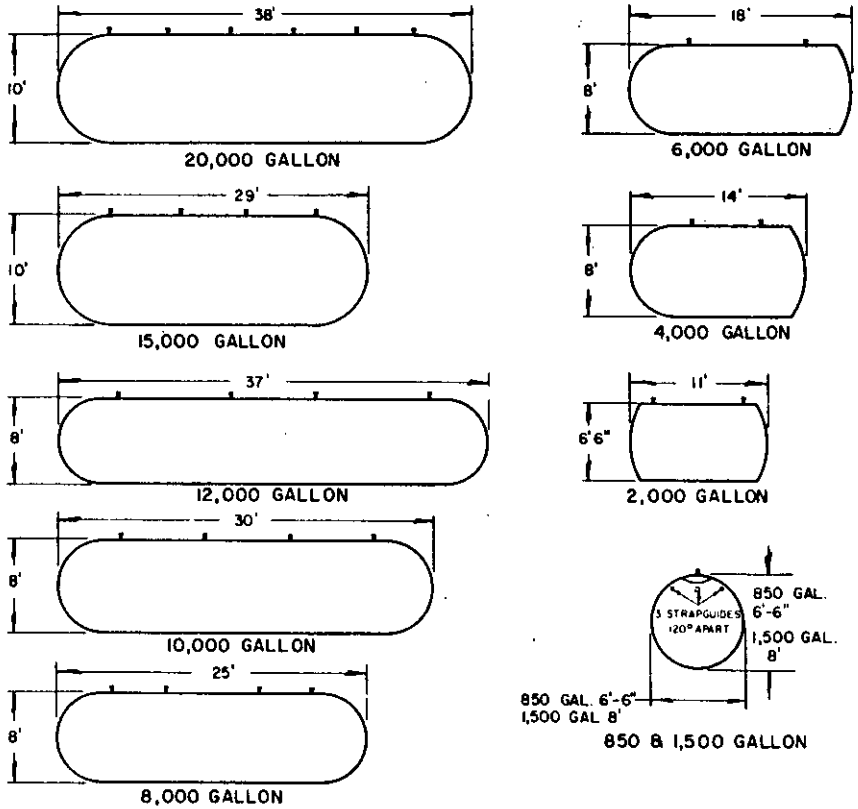

NOTES:

1. HOLD DOWN STRAP RIB LOCATIONS ARE INDICATED BY ARROWS.
2. EIGHT INCH FITTING CAN BE LOCATED AT TANK CENTER ON 8,000, 10,000 AND 12,000 TANKS ONLY.
3. STANDARD FITTINGS ARE 4" NPT ON ALL TANKS EXCEPT THE 850 GALLON SPHERICAL TANK WHICH HAS 2" FITTINGS.
4. PERIMETERS OF TANK ARE NOMINAL DIMENSIONS.
5. TANK SIZES (CAPACITY):

GALLONS	DIMENSIONS	NUMBER OF HOLD DOWN STRAPS
48,000	63' lg. X 12' O.D	16
40,000	52' lg X 12' O.D.	12
30,000	42' lg. X 12' O.D.	10
25,000	33' lg. X 12' O.D.	8
1,300	8' lg. X 6'-6" O.D.	2
1,000	11'-6" lg. X 4' O.D.	2
550	6'-6" lg X 4' O.D.	2

FIGURE 1. Tanks, storage, underground, glass fiber reinforced plastic.

X-2432B

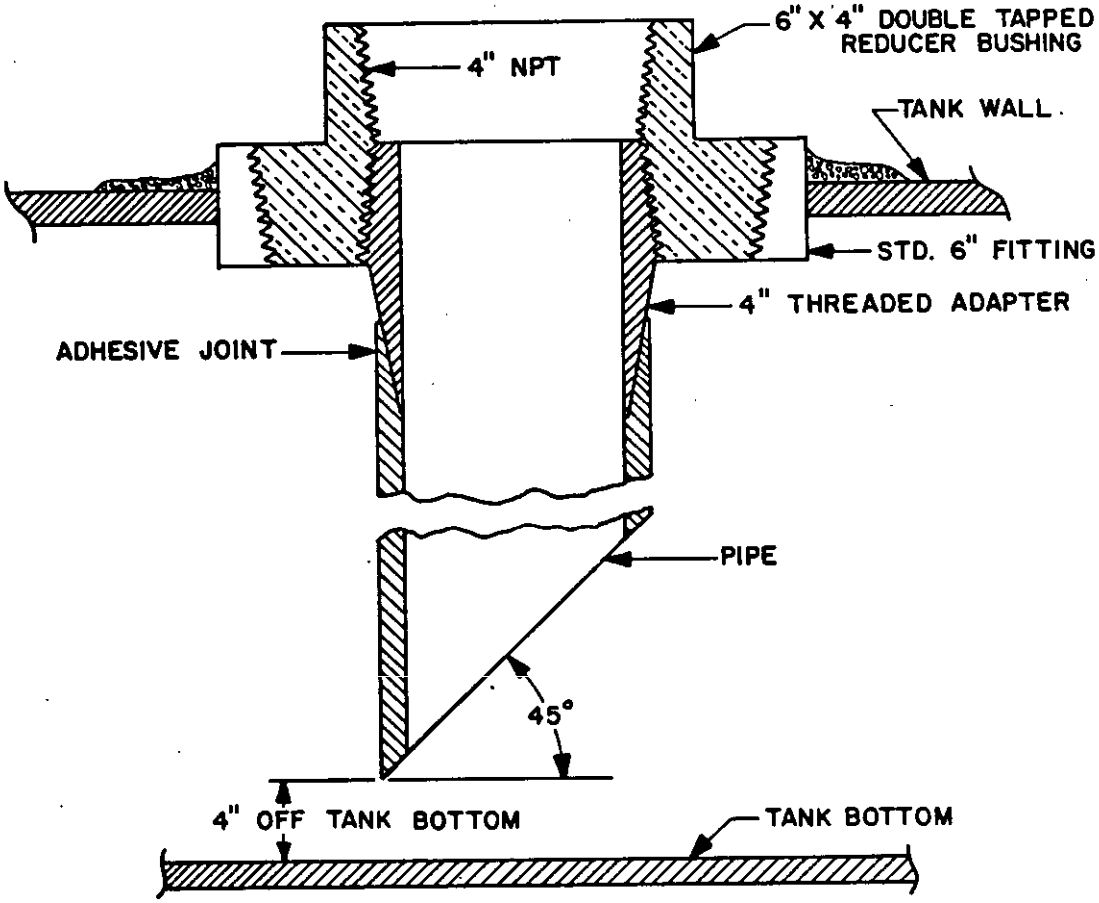

FIGURE 2. Four inch fill pipe.

X-2433A

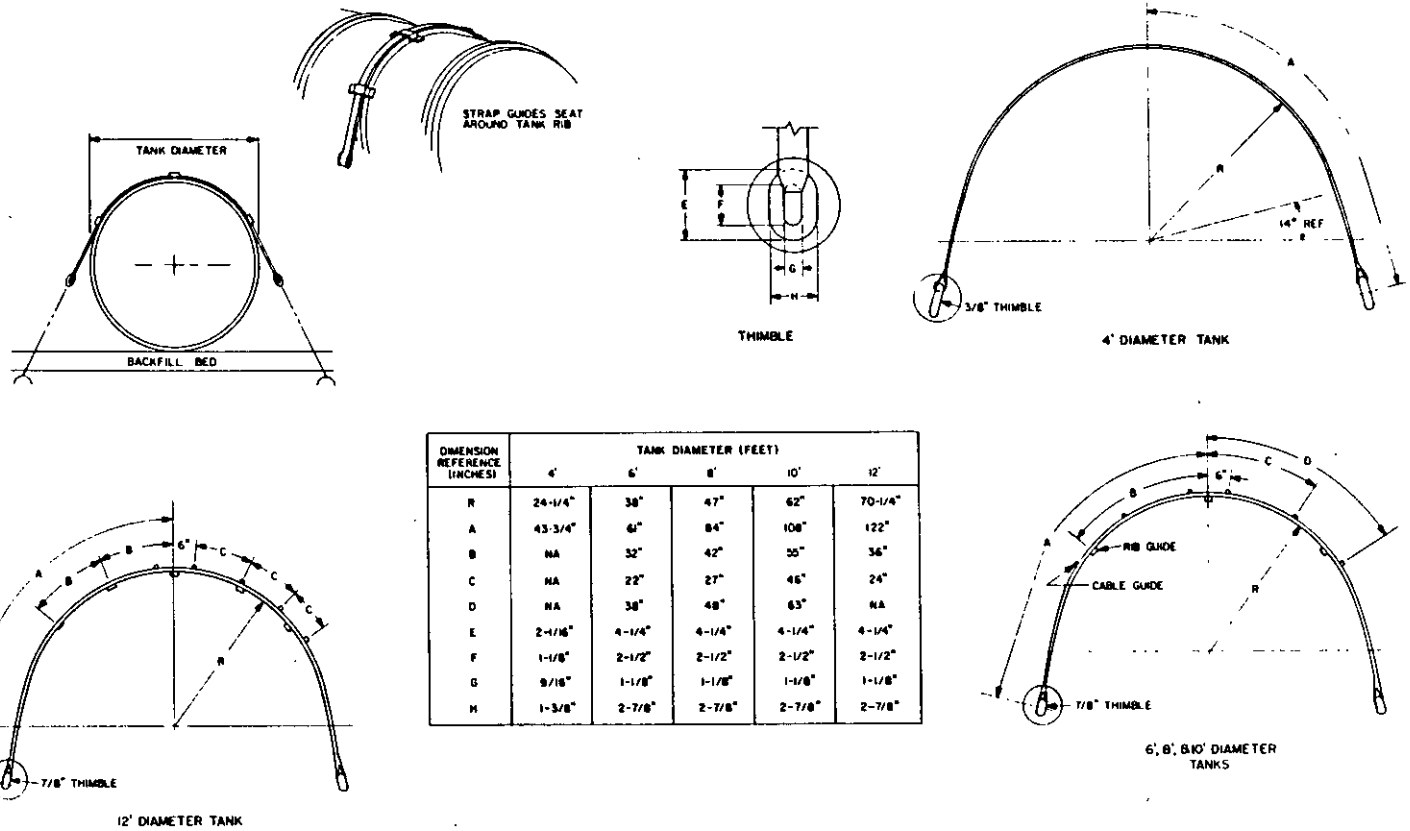

DIMENSION REFERENCE (INCHES)	TANK DIAMETER (FEET)				
	4'	6'	8'	10'	12'
R	24-1/4"	38"	47"	62"	70-1/4"
A	43-3/4"	61"	84"	108"	122"
B	NA	32"	42"	55"	36"
C	NA	22"	27"	46"	24"
D	NA	38"	48"	63"	NA
E	2-1/16"	4-1/4"	4-1/4"	4-1/4"	4-1/4"
F	1-1/8"	2-1/2"	2-1/2"	2-1/2"	2-1/2"
G	9/16"	1-1/8"	1-1/8"	1-1/8"	1-1/8"
H	1-3/8"	2-7/8"	2-7/8"	2-7/8"	2-7/8"

FIGURE 3. Non-corrosive preformed hold down straps.

X-2434B

FOLD

POSTAGE AND FEES PAID
DEPARTMENT OF THE ARMY
DOD – 314

U.S. MAIL

OFFICIAL BUSINESS
PENALTY FOR PRIVATE USE $300

Commander
US Army Mobility Equipment Research
and Development Command
ATTN: DRDME-DS
Ft. Belvoir, VA 22060

FOLD

STANDARDIZATION DOCUMENT IMPROVEMENT PROPOSAL

OMB Approval No. 22-R255

INSTRUCTIONS: The purpose of this form is to solicit beneficial comments which will help achieve procurement of suitable products at reasonable cost and minimum delay, or will otherwise enhance use of the document. DoD contractors, government activities, or manufacturers/vendors who are prospective suppliers of the product are invited to submit comments to the government. Fold on lines on reverse side, staple in corner, and send to preparing activity. Comments submitted on this form do not constitute or imply authorization to waive any portion of the referenced document(s) or to *amend contractual requirements*. Attach any pertinent data which may be of use in improving this document. If there are additional papers, attach to form and place both in an envelope addressed to preparing activity.

DOCUMENT IDENTIFIER AND TITLE MIL-T-52777A Tanks, Storage, Underground, Glass Fiber Reinforced Plastic

NAME OF ORGANIZATION AND ADDRESS

CONTRACT NUMBER

MATERIAL PROCURED UNDER A

☐ DIRECT GOVERNMENT CONTRACT ☐ SUBCONTRACT

1. HAS ANY PART OF THE DOCUMENT CREATED PROBLEMS OR REQUIRED INTERPRETATION IN PROCUREMENT USE?

A. GIVE PARAGRAPH NUMBER AND WORDING.

B. RECOMMENDATIONS FOR CORRECTING THE DEFICIENCIES

2. COMMENTS ON ANY DOCUMENT REQUIREMENT CONSIDERED TOO RIGID

3. IS THE DOCUMENT RESTRICTIVE?

☐ YES ☐ NO *(If "Yes", in what way?)*

4. REMARKS

SUBMITTED BY *(Printed or typed name and address - Optional)*

TELEPHONE NO.

DATE

DD FORM 1 JAN 72 1426

REPLACES EDITION OF 1 JAN 66 WHICH MAY BE USED