MIL-T-45309E(AT)
20 June 1983
Superseding
MIL-T-45309D(AT)
23 June 1977

MILITARY SPECIFICATION

TANK, COMBAT, FULL TRACKED, 105 MM GUN: M60, M60A1, M60A1(RISE), AND M60A3; PROCESSING FOR SHIPMENT AND STORAGE OF

This specification is approved for use by the US Army Tank-Automotive Command, Department of the Army, and is available for use by all Departments and Agencies of the Department of Defense.

1. SCOPE

1.1 Scope. This specification covers processing of M60, M60A1, M60A1 (RISE), and M60A3 Combat Tanks, Full Tracked, 105MM Gun, for storage outside of buildings, for immediate-use shipment, and for domestic or oversea shipment, including carloading; meeting the requirements of levels A and B preservation (see 1.2).

1.2 Classification. Processing shall be of the following levels as specified (see 6.1):

Level A	- Processing for domestic or overseas shipments and any storage outside of buildings in excess of 90 days from date of processing (periodic care and preservation during storage required).
Level B	- Limited processing for immediate-use shipment, for domestic or overseas shipments (excluding open deck loading), and any storage not to exceed 90 days from date of processing.

Beneficial comments (recommendations, additions, deletions) and any pertinent data which may be of use in improving this document should be addressed to: US Army Tank-Automotive Command, ATTN: DRSTA-GSS, Warren, MI 48090, by using the self-addressed Standardization Document Improvement Proposal (DD Form 1426) appearing at the end of this document, or by letter.

FSC PACK

NO DELIVERABLE DATA REQUIRED BY THIS DOCUMENT

2. APPLICABLE DOCUMENTS

2.1 Government documents.

2.1.1 Specifications and standards. Unless otherwise specified, the following specifications and standards of the issue listed in that issue of the Department of Defense Index of Specifications and Standards (DoDISS) specified in the solicitation, form a part of this specification to the extent specified herein.

SPECIFICATIONS
FEDERAL

FF-N-103	- Nails (Small) and Tacks; Cut.
MMM-A-178	- Adhesive, Paper Label, Water-Resistant.
MMM-A-1617	- Adhesive, Rubber Base, General Purpose.
NN-P-530	- Plywood, Flat Panel.
NNN-P-40	- Paper, Tissue, Lens Cleaning.
O-E-760	- Ethyl Alcohol (Ethanol); Denatured Alcohol; and Proprietary Solvent.
O-S-576	- Sodium Bicarbonate, Technical Grade.
P-D-220	- Detergent, General Purpose.
PPP-B-601	- Boxes, Wood Cleated Plywood.
PPP-B-621	- Boxes, Wood, Nailed and Locked Corner.
PPP-B-636	- Box, Fiberboard.
PPP-C-843	- Cushioning Material, Cellulosic.
PPP-C-1120	- Cushioning Material, Uncompressed Bound Fiber for Packaging.
PPP-T-42	- Tape, Packaging/Marking, Paper.
PPP-T-60	- Tape; Pressure-Sensitive Adhesive, Waterproof - for Packaging and Sealing.
PPP-T-97	- Tape; Pressure-Sensitive Adhesive, Filament Reinforced.
QQ-A-200	- Aluminum Alloy Bar, Rod, Shapes and Tube, Extruded.
QQ-R-566	- Rods, Welding, Aluminum and Aluminum Alloys.
QQ-S-698	- Steel, Sheet and Strip, Low-Carbon.
QQ-S-741	- Steel, Carbon: Structural Shapes, Plates and Bars.
QQ-S-781	- Steel Strapping, Flat.
QQ-W-461	- Wire, Steel, Carbon, (Round, Bare and Coated).
TT-C-490	- Cleaning Methods and Pretreatment of Ferrous Surfaces for Organic Coating.
TT-E-485	- Enamel, Semi-Gloss, Rust-Inhibiting.
TT-E-527	- Enamel, Alkyd, Lusterless.
TT-E-529	- Enamel, Alkyd, Semi-Gloss.
TT-P-636	- Primer Coating, Synthetic, Wood and Ferrous Metal.
TT-P-1757	- Primer Coating, Zinc Chromate, Low Moisture Sensitivity.
TT-V-121	- Varnish, Spar, Water-Resistant.

UU-C-282	- Chipboard.
UU-P-268	- Paper, Kraft, Untreated, Wrapping.
UU-T-81	- Tags, Shipping and Stock.
VV-F-800	- Fuel Oil, Diesel.
VV-L-800	- Lubricating Oil, General Purpose, Preservative (Water-Displacing, Low Temperature).

MILITARY

MIL-C-104	- Crates, Wood; Lumber and Plywood Sheathed, Nailed and Bolted.
MIL-P-116	- Preservation, Methods of.
MIL-B-117	- Bags and Sleeves, Interior Packaging.
MIL-B-121	- Barrier Material, Greaseproofed, Waterproofed, Flexible.
MIL-P-130	- Paper, Wrapping, Laminated and Creped.
MIL-A-148	- Aluminum Foil.
MIL-S-207	- Sulfuric Acid, Electrolyte, Packaging, Packing and Marking for Shipment and Storage of.
MIL-C-450	- Coating Compound, Bituminous Solvent Type, Black (for Ammunition).
MIL-P-3420	- Packaging Materials, Volatile Corrosion Inhibitor, Treated, Opaque.
MIL-W-3912	- Wood Parts, Fabricated: For Transport Vehicle Bodies and Similar Applications.
MIL-C-5424	- Cable: Steel (Corrosion-Resisting), Flexible, Preformed (for Aeronautical Use).
MIL-I-8574	- Inhibitors, Corrosion, Volatile, Utilization of.
MIL-G-10924	- Grease, Automotive and Artillery.
MIL-P-12841	- On Vehicle Equipment (OVE) for Military Vehicles, Packaging of.
MIL-P-13983	- Paint, Temporary, Lusterless, Gasoline Removable.
MIL-P-13988	- Paper, Lens, Tissue, Antitarnish, Wrapping.
MIL-P-14232	- Parts, Equipment and Tools for Ordnance Materiel, Packaging of.
MIL-E-16053	- Electrodes, Welding, Bare, Aluminum Alloys.
MIL-C-16173	- Corrosion Preventive Compound, Solvent Cutback, Cold-Application.
MIL-C-16555	- Coating, Compound, Sprayable, Strippable.
MIL-D-16791	- Detergents, Nonionic.
MIL-M-20693	- Molding Plastic, Polyamide (Nylon), Rigid.
MIL-L-21260	- Lubricating Oil, Internal Combustion Engine, Preservative.
MIL-T-22085	- Tapes, Adhesives, Preservation and Sealing.
MIL-F-22191	- Films, Transparent, Flexible, Heat Sealable, for Packaging Applications.
MIL-W-45205	- Welding, Gas Metal-Arc and Gas Tungsten-Arc, Aluminum Alloys Readily Weldable for Structures, Excluding Armor.
MIL-L-46002	- Lubricating Oil, Contact and Volatile Corrosion Inhibited.

MIL-L-46167	- Lubricating Oil, Internal Combustion Engine, ARCTIC.
MIL-H-46170	- Hydraulic Fluid, Rust Inhibited, Fire Resistant, Synthetic Hydrocarbon Base.
MIL-T-50036	- Talc, Technical, T1.
MIL-C-52078	- Cap-Plug, Cap, and Plug, Protective, Plastic Dust and Moisture Seal.
MIL-E-52798	- Enamel, Alkyd, Camouflage.
MIL-E-52835	- Enamel, Modified Alkyd, Camouflage, Lusterless.
MIL-D-81298	- Dye, Liquid Red, for Detection of Leaks in Aircraft Fuel Systems.

STANDARDS
MILITARY

MIL-STD-129	- Marking for Shipment and Storage.
MIL-STD-731	- Quality of Wood Members for Containers and Pallets.
MIL-STD-1261	- Welding Procedures for Constructional Steels.

2.1.2 Other Government documents, and Government drawings, and publications. The following documents, drawings, and publications form a part of this specification to the extent specified herein.

DRAWINGS
ARMY

10893902	- Installation, Vehicle, Protective Closure.

(Copies of specifications, standards, drawings, and publications required by manufacturers in connection with specific acquisition functions should be obtained from the contracting activity, or as directed by the contracting officer.)

2.2 Other publications. The following documents form a part of this specification to the extent specified herein. The issues of the documents which are indicated as DoD adopted shall be the issue listed in the current DoDISS and the supplement thereto, if applicable.

DEPARTMENT OF TRANSPORTATION
Hazardous Materials Regulations

(Application for copies should be addressed to the Department of Transportation, Hazardous Materials Regulations Board, Washington, D.C. 20590.)

INTERSTATE COMMERCE COMMISSION
Motor Carrier Safety Regulations

(Application for copies should be addressed to the Interstate Commerce Commission, Bureau of Motor Carriers, Washington, D.C.)

ASSOCIATION OF AMERICAN RAILROADS PUBLICATION
Section No. 1 - General Rules Governing Loading of Commodities on Open Top Cars.
Section No. 6 - Rules Governing the Loading of Department of Defense Materiel on Open Top Cars.

(Application for copies should be addressed to the Association of American Railroads, 59 East Van Buren, Chicago, Illinois 60605.)

(Technical society and technical association specifications and standards are generally available for reference from libraries. They are also distributed among technical groups and using Federal agencies.)

2.3 Order of precedence. In the event of a conflict between the text of this specification and the references cited herein, the text of this specification shall take precedence.

3. REQUIREMENTS

3.1 Level A.

3.1.1 First production processed vehicle. Unless otherwise specified (see 6.1), the first production processed vehicle shall be subjected to the inspection specified in 4.2. Approval of the first production processed vehicle shall not relieve the contractor of his obligation to process all vehicles in accordance with this specification. Except as otherwise specified by the acquisition activity, any change to materials, design, or processing procedures after approval of the first production processed vehicle shall require that an additional production processed vehicle be inspected as specified in 4.2.

3.1.2 Processing records. Records of vehicle processing shall be maintained and shall be readily available for review by the Government.

3.1.3 Disassembly. Projecting parts whose removal will accomplish desired cube reduction, and parts susceptible to damage or pilferage, shall be removed from the vehicle. Except as otherwise specified herein, removed bolts, nuts, screws, pins, and washers shall be placed in one of the mating parts and secured. Removed parts shall be preserved, packaged, and packed in accordance with the individual document for the specific item or in accordance with applicable provisions of MIL-P-116 and MIL-P-14232. Packed parts shall be identified as to contents and stowed securely within the vehicle.

3.1.4 Matchmarking. Parts removed from vehicle shall be matchmarked when necessary to facilitate reassembly. Matchmarking information shall be put on cloth shipping tags conforming to type A of UU-T-81 and attached to mating parts. The marked cloth shipping tags shall be waterproofed with varnish conforming to TT-V-121 or adhesive conforming to MMM-A-178.

3.1.5 Record forms. Two copies of DD Form 1397 shall be provided. Information on forms shall include preservation accomplished and depreservation instructions. The Equipment Log Book Binder and one copy of DD Form 1397 shall be placed in a bag conforming to type I, style 2 of MIL-B-117: bag shall be closed by heat sealing and securely attached inside the front (driver's) compartment of the vehicle. The other copy of DD Form 1397 shall be waterproofed with adhesive conforming to MMM-A-178 and securely attached in a conspicuous location on the exterior of the vehicle.

3.1.6 Cleaning and drying.

3.1.6.1 Interior of vehicle. Interior surfaces of vehicle shall be cleaned with a solution of detergent conforming to P-D-220, or type I of MIL-D-16791, and warm water. Water or other liquid under pressure, or steam cleaning, shall not be used. Cleaned surfaces shall be rinsed with clean water and dried. Care shall be taken during cleaning and rinsing to assure that no liquids enter instruments, connections, or other components susceptible to water damage, and that water does not accumulate in areas where it cannot drain or be dried.

3.1.6.2 Battery supports and retainers. Battery supports and retainers shall be cleaned with a solution of one-half pound of sodium bicarbonate conforming to O-S-576 per gallon of water. Cleaned surfaces shall be flushed with clean water, then thoroughly dried. Dried surfaces shall then be preserved in accordance with 3.1.7.2.

3.1.6.3 Backrests, seats, headrests, and crash pads. Cushion components shall be cleaned with a solution of detergent conforming to P-D-220, type I of MIL-D-16791, in warm water. Cushions shall be wiped with solution-soaked cloths and then rinsed with clean water to remove detergent solution. Care shall be taken not to saturate the cushions with detergent solution or water. After rinsing, cushions shall be dried, then protected in accordance with 3.1.8.3.

3.1.6.4 Exterior of vehicle. Exterior of vehicle shall be cleaned using a solution of detergent conforming to P-D-220, or type I of MIL-D-16791, in water or steam. Cleaning shall remove all foreign matter. Cleaned surfaces shall be rinsed with clean water or steam and thoroughly dried. Care shall be taken to avoid entry of water or steam into engine compartment, turret ring, commander's cupola, range finder end boxes, personnel heater exhaust tube, air cleaner ports, or other vehicle openings.

3.1.6.5 Gun. When inspection indicates the need for reprocessing of gun (see 4.5.2.3), gun shall be cleaned in accordance with process C-3 of MIL-P-116 and shall be thoroughly dried in accordance with procedure D-4 of MIL-P-116.

3.1.6.6 Fire control items. Fire control items shall be cleaned as specified in 3.1.7.12.1 through 3.1.7.12.9.

3.1.7 Preservation.

3.1.7.1 Relubrication. When vehicle has been operated more than 50 miles since lubrication, or after vehicle has been cleaned in accordance with 3.1.6, the vehicle shall be relubricated using materials conforming to drawings, specifications, or lubrication order applicable to the vehicle. All exposed oil can points, such as, but not limited to, levers, locking bars, strikers, hinges, hinge pins, locking pins, pintle pins, locking levers, wing nuts, latches, door locks, hand-operated locking knobs, linkage, and threaded ends of yokes and related clevis pins, shall be lubricated with oil conforming to VV-L-800. Excess lubricant shall be removed after lubrication.

3.1.7.2 Battery supports and retainers. Battery supports and retainers shall be preserved with compound conforming to MIL-C-450.

3.1.7.3 Transmission and final drives. Transmission shall contain lubricating oil only conforming to type I, grade 10 of MIL-L-21260 filled to operating level. Final drives shall contain lubricating oil conforming to type I, grade 10 or 30, as applicable, of MIL-L-21260 filled to operating level. DD Form 1397 shall be annotated with type and grade of lubricant used.

3.1.7.4 Engine crankcase. Crankcase of compression ignition engine shall be filled to operating level with lubricating oil conforming to type I of MIL-L-21260 of the seasonable grade specified in the applicable drawing, specification, or lubrication order. DD Form 1397 shall be annotated with type and grade of lubricant used. For vehicles being prepared for shipment to, and storage in, areas where ambient temperatures are expected to be at or below minus 20°F, a red warning tag containing the following instructions shall be attached in a conspicuous location in the driver's compartment: "DRAIN ENGINE CRANKCASE AND REFILL WITH MIL-L-46167 OIL BEFORE OPERATING ENGINE".

3.1.7.5 Engine preservation. Compression ignition engine shall be preserved in accordance with 3.1.7.5.1 through 3.1.7.5.5.

3.1.7.5.1 Fuel system and combustion chamber. Prior to processing, the engine shall be cooled to assure that cylinder head temperature, measured at injector nozzle flange surface of all cylinders, is not more than 100°F. Cooling shall be accomplished by induced air currents, or by waiting the period of time required to arrive at the above specified temperature. When ambient temperature exceeds 100°F, engine shall be cooled to the ambient temperature. After engine has been cooled, the fuel supply system from the fuel tanks shall be shut off. A portable container with two compartments shall be positioned to provide gravity feed to the engine. One compartment shall be filled with lubricating oil conforming to grade I of MIL-L-46002, colored with an oil soluble red dye conforming to MIL-D-81298, in a concentration sufficient to impart a marked coloring to the oil. The second compartment shall be filled with diesel fuel conforming to VV-F-800. Uncouple quick-disconnect on inlet fuel line to primary fuel filter. Remove filter cans and elements from both the primary and the secondary filters. Drain diesel fuel from filter cans and fill with lubricating oil MIL-L-46002, grade 1, and reinstall without filter elements. Uncouple the engine fuel return line quick-disconnect, and fasten a transparent plastic recovery line

to the engine line. Provide a recovery container for fuel being discharged from the transparent line. Deliver MIL-L-46002 oil from portable tank while operating the engine at idle speed (700 rpm) for not more than 60 seconds to consume fuel in the injection system and to pump the MIL-L-46002 oil into the engine fuel system. Following the 60 seconds of engine operation, the hand pump shall be operated, without depressing the solenoid switch, until lubricating oil is flowing through the transparent line into the recovery container. (The change should occur after approximately two gallons of fuel flow-out). Remove electrical leads from intake manifold heater igniter plugs and operate the hand purge pump 20 strokes, with solenoid switch depressed, to pump MIL-L-46002 lubricating oil into the intake manifold heaters. Unclamp hose from each turbocharger inlet. Secure an air restrictor cover, fabricated in accordance with figure A1, to each turbocharger inlet. While portable tank furnishes MIL-L-46002 oil, depress accelerator to full throttle and crank engine for three 30-second periods as follows: cranking shall be a period of 30 seconds, starter shall be allowed to cool for not less than three minutes, engine cranked for an additional 30 seconds, starter allowed to cool for not less than three minutes; engine then shall be cranked for a final period of 30 seconds.

CAUTION: Each cranking period shall not exceed the following times: 25 seconds minimum - 35 seconds maximum. Special precautions shall be taken to assure that time limits specified shall not be exceeded as the engine, the starter, or starter solenoid may be damaged.

NOTE: Engine may fire for 5 seconds while being cranked with air restrictors installed.

Reconnect electrical leads to intake manifold heater igniter plugs. Remove air restrictor covers, but do not reconnect turbocharger hoses (see 3.1.7.5.3).

3.1.7.5.2 Engine purging. The portable container shall be adjusted to provide diesel fuel for purging the return fuel line, fuel filters, engine fuel pump, and injector pump. Remove filter cans, drain MIL-L-46002 lubricating oil, and wipe clean with lint-free wiping material. Replace filter elements in cans, fill with diesel fuel, and reinstall filter cans. Hold engine fuel cut-off switch in OFF position while operating hand purge pump, without depressing solenoid switch, until diesel fuel is flowing through the transparent line into recovery container. (This occurs after approximately two gallons flow-out of MIL-L-46002 lubricating oil.) Disconnect recover line and reconnect engine fuel return line to fuel tanks. Turn on vehicle fuel supply system and reinstall any parts disassembled during engine processing.

3.1.7.5.3 Preservation of turbochargers. Two ounces of preservative oil, grade 1, MIL-L-46002 shall be atomize-sprayed in each turbocharger inlet. The removed clamps (see 3.1.7.5.1) shall be reinstalled on each turbocharger air inlet horn. Turbocharger inlets and air cleaner hoses shall be sealed with type IV, PPP-T-60, or type II of MIL-T-22085, or with plastic plugs conforming to MIL-C-52078.

3.1.7.5.4 Preservation through exhaust system. After preservation in accordance with 3.1.7.5.2 through 3.1.7.5.3, two ounces of preservative oil conforming to grade 1 of MIL-L-46002 shall be atomized into each exhaust opening. Openings shall then be sealed with tape conforming to type IV of PPP-T-60 or type II of MIL-T-22085. The engine crankcase breathers shall then be sealed with plastic plugs conforming to MIL-C-52078, or with tape conforming to type IV of PPP-T-60 or type II of MIL-T-22085.

3.1.7.5.5 Preservation through dipstick shroud opening and oil filler tube. After preservation in accordance with 3.1.7.5.1 through 3.1.7.5.4, six ounces of preservative oil MIL-L-46002, grade 1, shall be atomize-sprayed into the crankcase through the oil filter cap opening. An extension of sufficient length to permit spray nozzle to be within the crankcase shall be used. Spray nozzle shall not be submerged in the crankcase oil. (Note: In case of inability to use oil tube filler system to atomize-spray due to change in location of filler tube, the dipstick shroud opening shall be used.) After spraying has been accomplished, dipstick shall be reinstalled, oil filler cap closed, and all openings to the engine interior, including dipstick shroud opening and oil filler cap, shall be sealed with tape type IV, PPP-T-60 or type II of MIL-T-22085.

3.1.7.5.6 Engine preservation warning tag. After processing in accordance with 3.1.7.5.3 through 3.1.7.5.5, prepare a red tag imprinted with the following warning: "ENGINE PRESERVED WITH VCI - DO NOT CRANK. BEFORE CRANKING ENGINE, REMOVE TAPE OR PLUGS FROM TURBOCHARGER INLETS, AIR CLEANER HOSES, EXHAUST TUBE OPENINGS, CRANKCASE BREATHERS, OIL FILLER CAP, DIPSTICK SHROUD OPENING, AND FROM OTHER OPENINGS TO THE ENGINE. RECONNECT AIR CLEANER HOSES TO TURBOCHARGER INLETS." Place tag in a conspicuous location in driver's compartment. Annotate DD Form 1397 to show that engine has been processed with VCI and preservative oil.

3.1.7.6 Air cleaners. After completion of acceptance tests and prior to tank shipment, the air cleaner supply shall be adjusted to assure that air will be taken from the engine compartment and not the crew compartment. Exterior air cleaner discharge elbows shall be sealed with type IV, PPP-T-60 tape or type II of MIL-T-22085.

3.1.7.7 Personnel heater and fuel pump. After processing engine as specified in 3.1.7.5, uncouple quick-disconnect from personnel heater fuel pump line and drain the fuel line. Seal ends of disconnected fuel line with plastic caps/plugs conforming to MIL-C-52078, or with tape conforming to type IV of PPP-T-60, or type II of MIL-T-22085. The external heater exhaust opening shall be sealed with tape conforming to type IV, PPP-T-60, or type II of MIL-T-22085. Warning tags with the following information shall be secured to the heater unit, to the heater fuel pump, and to the heater operating switch (on driver's control panel): "HEATER FUEL LINE DISCONNECTED AND SEALED - REMOVE SEALS FROM FUEL LINE AND EXHAUST TUBE, OPERATE HEATER FUEL PUMP TO DRAIN MINIMUM OF ONE QUART FUEL - RECONNECT FUEL LINE TO HEATER PRIOR TO STARTING."

3.1.7.8 Fuel tanks. Each fuel tank shall be drained to the maximum extent possible. Fuel tank cap and filler screen shall be removed and coated with lubricating oil conforming to type I, grade 30, of MIL-L-21260. One

quart of lubricating oil conforming to type I, grade 10 of MIL-L-21260 shall be added to each five gallons, or portion thereof, of residual fuel. Tank cap and filler screen shall be reinstalled.

3.1.7.9 Turret ring bearing. Lubrication of turret ring bearing for production-processed vehicles shall be in accordance with specified manufacturing requirements. For other than new production vehicles, lubricate race ring bearing in accordance with recommended semi-annual maintenance procedures.

3.1.7.10 105MM gun tube installed in mount. Immediately after cleaning (3.1.6.5), bore and chamber of the gun shall be coated with preservative oil conforming to VV-L-800. Excess preservative shall be allowed to drain from coated surfaces. A strip of volatile corrosion inhibitor (VCI) treated barrier material conforming to type I, class 3, style A of MIL-P-3420, shall be cut and rolled into a tube with the VCI treated surface on the outside. The barrier material shall be of a size that will provide a continuous cover for the bore and chamber surfaces. The rolled barrier material tube shall be inserted into the gun extending the entire length of bore and chamber. Tube shall not be forced or kinked in a manner that would obstruct chamber. The gun shall remain in battery with turret travel lock secured in lock position. VCI material shall be applied in accordance with MIL-I-8574.

3.1.7.10.1 Muzzle plug. A plug shall be provided for the muzzle end of the gun cannon (see figure B1); muzzle plug shall be completely overwrapped with aluminum foil conforming to MIL-A-148, positioned in muzzle end and secured in place with tape conforming to type IV of PPP-T-60 or type II of MIL-T-22085. The joint around muzzle plug and gun shall be completely sealed with tape conforming to type IV of PPP-T-60 or type II of MIL-T-22085. A polyethylene bag conforming to MIL-B-117, style 2, type I, class B (6 mils) shall be provided. Bag shall be seven inches long and of applicable width. Bag shall be installed over muzzle end and secured in place with four strips of tape conforming to type IV of PPP-T-60 or type II of MIL-T-22085. Tape shall be applied lengthwise at top, bottom, and each side. Tape shall be 12 inches long and a minimum 1 inch in width, applied equally 6 inches onto bag and 6 inches onto painted surfaces. Bag shall be sealed to gun with tape conforming to type IV of PPP-T-60 or type II of MIL-T-22085. Tape shall be of applicable length, 6 inches wide, to provide a continuous seal around circumference of gun. Tape shall be applied equally three inches onto bag and three inches onto painted surfaces. Two additional one-inch strips of tape shall be applied at equal intervals between muzzle end, and area where bag is sealed to gun. Tape shall be applied completely around circumference of bag to provide additional securement of bag to gun.

3.1.7.10.2 Breech mechanisms. All unpainted surfaces, including phosphated surfaces of the breech block, breech operating mechanism, and firing mechanism, shall be coated with grease conforming to MIL-G-10924. A plug shall be provided for the breech (see figure B1). Plug shall be completely overwrapped with aluminum foil conforming to MIL-A-148. Breech shall be opened and breech plug positioned in the gun chamber. Breech shall be closed.

3.1.7.10.3 Exercising of recoil mechanism. When the recoil mechanism has not been exercised, proof fired, overhauled, or manufactured within four months prior to preparation for storage of shipment, the recoil mechanism shall be exercised a minimum of three extensions of the recoil piston. Extension shall be a minimum of 6 inches. Record of exercising shall be entered on DA Form 2408-4, "Weapons Record Data", and proof testing of the weapon shall be entered on DA Form 2408-9, "Proof Acceptance Record".

3.1.7.10.4 Recoil mechanism (after exercising). Accessible machined surfaces of the gun immediately forward of the recoil mechanism shall be coated with grease conforming to MIL-G-10924. Inaccessible machined surfaces shall be fogged with preservative oil conforming to type I, grade 10 of MIL-L-21260. Processing shall be accomplished by removing cover of the gun shield. The surface of the recoil mechanism immediately forward of the breech ring collar shall be coated with grease conforming to MIL-G-10924. Application of grease shall be made while gun cannon is out of battery during exercising, and upon last extension prior to return to battery.

3.1.7.10.5 Exercising of replenisher. Replenisher assemblies shall be exercised coincidentally with the recoil mechanism (see 3.1.7.10.3).

3.1.7.10.6 Replenisher (after exercising). Replenisher shall be filled to bleed position with hydraulic fluid conforming to MIL-H-46170, then drained to operating level.

3.1.7.10.7 Gun mount. The exposed unpainted surfaces of elevating cylinder, trunnions, trunnion caps, and bearings shall be coated with grease conforming to MIL-G-10924.

3.1.7.11 105MM gun tube removed from mount. For all oversea shipments, gun tube shall be removed from turret (see 6.4) and stowed on the vehicle fender in accordance with figures D1 through D30. Where applicable, tanks equipped with thermal shrouds mounted on the main gun tube shall have the shroud components (forward of the bore evacuator) removed from the gun tube before the tube is removed from its mount (see 6.4). Removed shroud parts shall be cleaned to remove surface dirt, and then shall be packaged and stowed as specified in 3.1.8.12. Extreme care shall be exercised to prevent damage to threaded portion of gun tube during the following operations.

3.1.7.11.1 Gun tube. Gun tube shall be processed in accordance with 3.1.6.5 and 3.1.7.10, and as specified herein. Bare metal surfaces of breech end of tube, including threaded area, shall be wrapped with treated barrier material conforming to type I, class 1, style C of MIL-P-3420. VCI material shall be applied in accordance with MIL-I-8574. Treated side of barrier shall be applied against the bare metal surface and shall provide a continuous cover starting from 2 inches on the painted surface and extending to approximately 6 inches beyond breech end of tube. Barrier material shall overlap approximately 3 inches over entire length, and shall completely cover breech plug when folded toward tube center. Barrier material shall be secured in place with tape conforming to type IV of PPP-T-60, or type II of MIL-T-22085. Tape and barrier shall then be oversprayed with coating compound conforming to type II, class 1, of MIL-C-16555. Coating shall be a minimum thickness of 0.040 inch when measured after 4 hours drying (see

4.5.2.4). Specified thickness shall be applied over the entire covered area and extend not less than 2 inches onto the painted surface of the tube. Threaded protion of the tube and area of the tube recoil surface which will contact the fender mount shall be protected by application of two layers of barrier material conforming to type I, grade C, of MIL-B-121. Barrier over the threaded portion of the tube shall be secured in place with tape conforming to type IV of PPP-T-60 or type II of MIL-T-22085. Removed gun tube locking pin and set screw shall be coated with oil conforming to VV-L-800, wrapped in barrier conforming to type II, grade A, class 2, of MIL-B-121 and placed in a 4 by 8-inch bag conforming to style 2, type I, class B (4 mil), of MIL-B-117. Bag shall be identified as to contents, heat-sealed, and secured in oddment tray with tape conforming to type IV of PPP-T-60 or type II of MIl-T-22085.

3.1.7.11.2 Gun mount - after removal of the gun tube. The gun mount shall be placed in full elevation. All bare metal surfaces exposed by removal of the gun tube shall be cleaned in accordance with process C-3 and dried in accordance with process D-4 of MIL-P-116. The above surfaces shall then be coated with grease conforming to MIL-G-10924. Opening in the gun shield shall be sealed with barrier material conforming to type I, grade C of MIL-B-121. A wood disc conforming to figure D28 shall be inserted into opening of the mantlet cover and secured in position using the mantlet cover clamp. The bellows section of the mantlet cover shall be compressed and secured against the gun shield in accordance with figure D2.

3.1.7.11.3 Breech mechanism after removal of gun tube. Breech mechanism shall be processed in accordance with 3.1.7.10.2.

3.1.7.11.4 Reinstallation of gun tube in mount. Prior to reinstallation of gun tube, bare metal surfaces of gun tube and mount shall be cleaned in accordance with process C-3, and dried in accordance with process D-4 of MIL-P-116. The surfaces shall be lightly lubricated with MIL-G-10924 grease. The gun tube shall then be reinstalled (see 6.4 for instructions).

3.1.7.12 Fire control items.

3.1.7.12.1 Commander's periscope. If installed, the commander's periscope shall be removed from the vehicle. Exposed optical components shall be cleaned by blowing on exposed optical glass surfaces with air from a hand syringe, or by use of a clean camel's hair brush, followed by the use of ethyl alcohol conforming to O-E-760. In cases of contamination not removable by alcohol, cleaning shall be accomplished by use of a solution consisting of 2 ounces detergent conforming to MIL-D-16791, 1/2 gallon alcohol conforming to O-E-760, and 1 gallon of distilled water. Using a swab made of lens tissue conforming to NNN-P-40, optical glass surfaces shall be washed with the cleaning agent. Washing shall be repeated, using a clean swab each time, until no dirt or other foreign matter remains on the surfaces. Cleaning shall be accomplished with a minimum of pressure and rubbing, without the use of cloth or rubbing materials, to prevent damage to lens coatings. Immediately after cleaning, the optics shall be covered or wrapped with lens tissue conforming to MIL-P-13988, and secured with tape conforming to type IV, PPP-T-60 or type II of MIL-T-22085. All exposed, unpainted, unplated, metal surfaces shall be coated with grease conforming to MIL-G-10924. The commander's external periscope cover also shall be removed. The removed

cover, gasket, and six each of the cover mounting screws and lockwashers (see figure B10) shall be preserved in accordance with Level A requirements of MIL-P-116, and then packaged in accordance with 3.1.8.4. Bare metal surfaces around the cupola opening exposed by removal of the periscope cover shall be cleaned, preserved with grease conforming to MIL-G-10924, and the opening shall be sealed per 3.1.8.4.

3.1.7.1.12.2 Gunner's periscope and telescope. The gunner's periscope (passive or thermal) and telescope shall not be removed from installed positions in the vehicle. Exposed optical components shall be cleaned and wrapped as described in 3.1.7.12.1 above. When applying tape to secure protective lens tissue over cleaned periscope optics, do not apply tape directly to rubber surfaces of eyepiece over lens; insert a layer of lens tissue or similar paper barrier between rubber eyepiece surfaces and tape before securing tape to periscope. All exposed, unpainted, unplated, metal surfaces shall be coated with grease conforming to MIL-G-10924. The shield on the gunner's periscope cover shall be secured in the down position.

3.1.7.12.3 Instrument lights. If installed, instrument lights shall be removed from the vehicle, packaged, and packed in accordance with 3.1.8.5. Instrument lights shall be packaged without batteries.

3.1.7.12.4 Range finder. The optical surfaces, including end box windows, shall be cleaned as prescribed in 3.1.7.12.1, then shall be covered with four thicknesses of lens tissue conforming to MIL-P-13988, and wrapping secured with tape conforming to type IV, PPP-T-60 or type II, MIL-T-22085. All exposed, unpainted, unplated metal surfaces shall be coated with grease conforming to MIL-G-10924.

3.1.7.12.4.1 Purging of range finder. A range finder on hand for over 90 days from date of receipt at vehicle manufacturer, which discloses internal moisture at time of preparation for shipment or storage, shall be processed as follows: Exercise all controls to full limits in all normal directions of movement and return to normal positions. Remove caps from right and left hand valves of range finder. Remove valve core from one valve of the range finder. Connect the valve to a cylinder of dry nitrogen and allow nitrogen to flow at 5 pounds per square inch (psi) through range finder for 20 to 30 minutes. Reduce pressure to 1 to 2 psi and install valve core. Caution: Check to insure that cylinder pressure does not exceed capacity of the pressure regulator. Disconnect nitrogen cylinder and place cap on right and left valves. After purging, process range finder in accordance with 3.1.7.12.4. End boxes shall be purged only when internal moisture is found during inspection.

3.1.7.12.5 Commander's periscope link. Link shall not be removed. The end of the link assembly shall be secured to the support provided for this purpose. To prevent damage in this condition, the handcrank shall be wired to the elevation screwjack body.

3.1.7.12.6 Mounts, ballistic computer and drive. All exposed, unpainted, unplated, metal surfaces of periscope and telescope mounts, computer and drive, shall be coated with grease conforming to MIL-G-10924, except that ballistic drive coupling and wedge of gunner's periscope shall be coated with preservative oil conforming to type I, grade 10 of MIL-L-21260.

3.1.7.12.7 Infinity sight. The infinity sight shall remain installed in the vehicle. Exposed optical surfaces and unprotected metal surfaces shall be cleaned, preserved, and wrapped in accordance with applicable provisions of 3.1.7.12.1.

3.1.7.12.8 Level vial covers. All level vial covers shall be positioned over the vials.

3.1.7.12.9 Exposed optical glass. Any exposed optical glass, not otherwise provided for herein, shall be cleaned, wrapped, and taped as specified in MIL-P-14232.

3.1.7.13 Driver and loader vision equipment. If installed, the driver's and loader's daylight periscopes and the driver's IR periscope or night vision viewer shall be removed from the vehicle. Exposed optical surfaces of the periscopes or viewer shall be cleaned in accordance with instructions in 3.1.7.12.1. Exposed, unpainted, unplated metal surfaces shall be cleaned and coated with grease conforming to MIL-G-10924. Preserved parts shall be packaged in accordance with 3.1.8.5.

3.1.7.14 Ventilation. All access plates and gaskets on the underside of the vehicle and the lower bulkhead door shall be removed, and the driver's and engine compartment drain valves secured in open position. Unpainted metal surfaces exposed by disassembly shall be coated with preservative conforming to grade 1 of MIL-C-16173. Access plates shall be packaged in accordance with 3.1.8.8. Threaded portions exposed by removal of these items shall be coated with preservative conforming to grade 4 of MIL-C-16173. Screens conforming to figures B2 through B9 shall be constructed and installed in access cover openings and driver's periscope opening as specified. The driver's center daylight periscope cover shall be blocked in an open position in accordance with figure B6. The following shall be stenciled on the exterior of the vehicle: "REMOVE SCREENS, INSTALL ACCESS PLATES, COVERS AND GASKETS, REMOVE BLOCKING IN DRIVER'S CENTER PERISCOPE OPENING, AND CLOSE DRAINS BEFORE OPERATING VEHICLE." Stenciling shall be applied using white or yellow paint conforming to MIL-P-13983. Characters shall be a minimum of 3/4 inch in height.

3.1.7.15 Fire extinguishers. Fire extinguisher cylinders shall have a minimum of 90 percent of rated full charge. All seals shall be intact. DA Form 253 shall be completed and securely attached to each cylinder (see 6.2 and 6.3).

3.1.7.16 Hatches. Rubber seals around hatches shall be coated with powdered talc conforming to MIL-T-50036. During shipment, hatches shall be closed and locked from the inside, except loader's hatch. The loader's hatch shall be closed and secured from the outside with a bolt having a nut drawn up tight and tack welded to the bolt, or with an approved government padlock. Brakes shall not be set on vehicles having hatches sealed and secured.

3.1.7.17 Miscellaneous preservation. Except as otherwise specified herein, all exposed, unpainted, metal surfaces on the exterior of the vehicle, except the track, shall be coated with compound conforming to grade 1 of MIL-C-16173. All exposed, unpainted, unplated ferrous metal surfaces on the interior of the vehicle shall be coated with compound conforming to grade 4 of MIL-C-16173.

3.1.8 Packaging.

3.1.8.1 Dry charged batteries and cables. Dry charged batteries shall be installed in the vehicle battery carrier. Filler cap openings shall be sealed by placing a two-inch wide by 3-mil thick strip of film conforming to type II of MIL-F-22191 over all filler cap openings with caps removed. The film shall be of sufficient length to allow the film to be depressed into the filler cap opening to the same depth as the filler cap. Filler caps shall be screwed into the filler openings to form a complete seal without damaging plastic film. Battery cables shall be secured to battery carrier with 3/4-inch wide tape conforming to type IV of PPP-T-97.

3.1.8.2 Electrolyte. Electrolyte shall be packaged, packed, and marked as specified for type IV, class 1 or 2 unit (as applicable), in accordance with MIL-S-207, except that the exterior containers shall conform to PPP-B-601 or PPP-B-621. The packed electrolyte shall be stowed with the basic issue items (BII) and secured independently to permit separate removal.

3.1.8.3 Backrests, seats, headrests, and crash pads. Cushioned components shall be covered with paper conforming to grade B of UU-P-268, with a minimum basis weight of 60 pounds. Paper shall be secured with tape conforming to type I of PPP-T-42.

3.1.8.4 Fire control items. Immediately after preservation of the commander's periscope (see 3.1.7.12.1), apply protective guards to the eyepiece assembly (paperboard tube, taped in place) and to the elevator arm (plywood block with cemented rubber pads). (Production processors may reuse serviceable items salvaged from packaging materials as applied by equipment source packagers). The commander's periscope then shall be wrapped with barrier material conforming to type II of MIL-P-130, or equivalent; placed in a bag conforming to type I, class E, style 1, of MIL-B-117 and sealed; cushioned on four sides and both ends with pads conforming to type IV, class A, of PPP-C-1120, or equivalent; and placed in a container conforming to style RSC, grade V3-C, of PPP-B-636. Cushioning material shall be a minimum of one-inch thick. Close container with tape conforming to PPP-T-60. The packaged periscope then shall be secured inside the vehicle crew compartment. Exterior size of package must allow passage through the turret hatches. The preserved periscope cover, gasket, and mounting hardware shall be packaged to Level A requirements of MIL-P-14232, identified as to contents, and securely stowed within the vehicle. The commander's periscope opening in the cupola shall be sealed with a wood cover in accordance with figure B10. Attachment of the wood cover shall be accomplished by using three each of the removed screws and lockwashers that secured the periscope cover to the cupola mount. Secure to the underside of the wood cover a tag bearing the following instructions, "DO NOT DISCARD THE SCREWS AND LOCKWASHERS USED TO MOUNT THIS COVER - USE THEM WITH OTHER PACKAGED HARDWARE TO REMOUNT THE EXTERIOR

PERISCOPE COVER."

3.1.8.5 Driver and loader vision equipment. Immediately after preservation (see 3.1.7.13), the driver's and loader's daylight and infrared (IR) periscopes, or viewers, shall be packaged in accordance with Level A requirements of MIL-P-116 and MIl-P-14232, identified as to contents, and securely stowed within the vehicle.

3.1.8.6 Wind sensor and probe. Where applicable, wind sensor probe shall be removed from the mast located on turret. Wrap probe with barrier material conforming to grade A, type II, class 1, MIL-B-121, and pack in a carton conforming to PPP-B-636, type CF, class WR. Box shall be sealed with tape conforming to type IV of PPP-T-60 or type II of MIL-T-22085, identified, and stowed within the vehicle in such a manner as to preclude damage. The mast and mounting hardware also shall be removed, cleaned, preserved, packaged, identified, and stowed inside the vehicle. Mast opening in turret shall be cleaned, preserved with grease per MIL-G-10924, and sealed with tape type IV of PPP-T-60 or type II of MIL-T-22085.

3.1.8.7 Fire extinguishers. Exterior fire extinguisher handles and protective shields shall be completely sealed with tape conforming to type IV of PPP-T-60, or type II of MIL-T-22085. A red warning tag containing the following information shall be located in a conspicuous place within the driver's compartment: "EXTERIOR FIRE EXTINGUISHER HANDLES SEALED WITH TAPE - REMOVE TAPE BEFORE STARTING ENGINE OR PLACING VEHICLE IN SERVICE."

3.1.8.8 Access plates and gaskets. Preserved access plates and gaskets (see 3.1.7.14) shall be packaged in a box conforming to type CF, class WR, of PPP-B-636. Box shall be closed with tape conforming to type IV of PPP-T-60 or type II of MIL-T-22085, identified as to contents, and securely stowed within the vehicle.

3.1.8.9 Tow hooks. Tow hooks and related hardware shall be removed for shipment and packaged in a type CF, class WR, box conforming to PPP-T-636. Box shall be closed with tape conforming to type IV of PPP-T-60 or type II of MIL-T-22085, identified as to contents, and securely stowed within the vehicle.

3.1.8.10 Basic issue items (BII). The basic issue items shall be packaged, packed, and stowed in accordance with MIL-P-12841 or other documents designated by the responsible agency. Sensitive cargo, such as machine guns, shall be stowed and shipped as specified in 3.1.10. For oversea shipment, the vehicle shall be provided with BII racks assembled and installed in accordance with figures C1 through C20. Engine grille bolts removed and replaced by longer bolts shall be coated with preservative MIL-C-16173, grade 4; wrapped in MIL-B-121, grade A, type II, class 1, barrier material; placed in a PPP-B-636 box; closed with type IV, PPP-T-60 or type II of MIL-T-22085 tape; identified; and securely stowed within the vehicle. Apply to BII boxes, tags or stencils that contain the following instructions: "WHEN VEHICLES ARE PLACED IN OUTSIDE STORAGE, REMOVE BII BOXES, IDENTIFY WITH VEHICLE SERIAL NUMBER, AND STORE INSIDE OF BUILDING." For domestic vehicle shipment, the BII containers shall be anchored to the railcar floor to prevent movement during transit. Corner protectors shall be used under container securing straps.

3.1.8.11 Telephone box. Secure external telephone box door in closed position using one-half-inch wide metal strapping conforming to QQ-S-781, type I, class B. Strap shall be located between signal light and door latch. Strap tension shall be controlled to secure the door without damage or distortion to the box. A strip of tape conforming to PPP-T-60, or equivalent barrier, shall be applied to box edges under the strapping to prevent damage to painted surfaces.

3.1.8.12 Gun tube thermal shroud. Where applicable, the forward thermal shroud parts disassembled from the main gun tube (see 3.17.11) shall be packaged and stowed in the turret crew compartment. Remove forward and rear shroud clamps. Clamp springs, two-piece ring set, two rear spacers, and shim pack shall be packed in a box conforming to type CF, class WR, of PPP-B-636. Cushioning material conforming to PPP-C-843 shall be placed around and between parts to prevent surface or paint damage and to immobilize package contents. The packed container shall be closed with tape conforming to type IV of PPP-T-60 or type II of MIL-T-22085, identified as to contents, and securely stowed in the turret. Exposed ends of the tubular shroud shall be protected with a minimum of one-half-inch thickness of cushioning material conforming to PPP-C-843, which shall be secured to the shroud with PPP-T-42, type I tape. The shroud shall be placed inside the turret and securely restrained with tape or wire to prevent movement during vehicle transit."

3.1.9 Vehicle closure.

3.1.9.1 Closure kit. Unless otherwise specified (see 6.1), vehicle shall be provided with a vehicle protective closure. Closure shall be fabricated, assembled, and installed in accordance with Army drawing, P/N 10893902. All sharp corners of framework shall be cushioned with a 3/4-inch minimum thickness of cushioning material conforming to PPP-C-843, secured in place with tape conforming to type IV of PPP-T-60 or type II of MIL-T-22085. To prepare vehicle for loading, front and rear stiffener rods shall be removed from cover. Cover shall be rolled away from the front and rear bows to expose vehicle lifting eyes. The double zipper fastener located at front of closure is provided for use when loading two vehicles on a railroad car when gun tube is installed in gun mount. When two vehicles are loaded on one flat car, the gun tube of one of the vehicles shall be removed from the travel lock, depressed and secured in accordance with figures E1 and E3. The area where the gun tube passes through the zippered cover shall be sealed in accordance with the applicable requirements of figure E2. When gun tube is removed from the vehicle or displaced from its travel lock position, the unused gun tube opening in closure cover shall be sealed according to figure E2.

3.1.9.2 Closure marking. The information "TO PREPARE VEHICLE FOR LOADING: OPEN ZIPPERS, REMOVE STIFFENER RODS NEAR COVER ENDS, UNFASTEN COVER FROM FRAME ENDS, AND ROLL COVER AWAY FROM FRONT AND REAR FRAME BOWS TO EXPOSE VEHICLE LIFTING EYES. AFTER LOADING, RESTORE AND SECURE COVER TO ORIGINAL CONDITION" shall be stenciled on the exterior front and rear of the closure in characters a minimum of 3/4-inches high using white enamel conforming to TT-E-529.

3.1.9.3 Closure disposition marking. The following information shall be stenciled on the outside, front and rear of the cover: "REUSABLE CLOSURE (COVER AND FRAMEWORK) - DO NOT DESTROY - WHEN REMOVED AND NO LONGER REQUIRED FOR VEHICLE PROTECTION, DISASSEMBLE, PACKAGE, AND SHIP PER INSTRUCTIONS ON INSIDE OF COVER." The following information shall be stenciled on the inside, front and rear, of the cover:

CLOSURE PACKAGING AND SHIPPING INSTRUCTIONS:

1. DISASSEMBLE FRAMEWORK AND SECURELY BUNDLE LIKE ITEMS.
2. PACKAGE SMALL HARDWARE IN CLOTH BAGS.
3. GROUP LARGEST, HEAVIEST ITEMS ON BOTTOM OF WOOD SHIPPING BOX.
4. PLACE SMALLER PACKAGED ITEMS IN VOIDS BETWEEN LARGER ITEMS.
5. FOLD CLOSURE COVER - PLACE ON TOP OF OTHER PACKED ITEMS.
6. IMMOBILIZE PACKED ITEMS AND SECURE BOX COVER.
7. SHIP TO (address to be furnished by contracting officer.)

All stenciled characters to be a minimum of 3/4-inches high using white enamel conforming to TT-E-529.

3.1.10 Security of sensitive cargo. Sensitive cargo may be stowed and shipped within the locked vehicle. When this is not possible, sensitive cargo shall be stored separately under proper security or shipped by separate mode of transportation under proper security as directed by acquisition acitivity. All hatches shall be secured in accordance with 3.1.7.16, and parking brake shall be set in released position for shipment of vehicle.

3.2 Level B. Vehicles shall be processed in the same manner as specified for Level A, with the following exceptions.

3.2.1 Fire control items (see 3.1.6.6, and 3.1.7.12 through 3.1.7.12.9). All fire control items shall remain installed. Cleaning and preservation shall be in accordance with requirements of 3.1.7.12.1. All ballistic shields shall be secured in the down position.

3.2.2 Transmission and final drives (see 3.1.7.3). Transmissions and final drives shall contain normal seasonal operational lubricant as specified on lubrication order, filled to operating level. DD Form 1397 shall be annotated to indicate grade of lubricant used.

3.2.3 Engine crankcase (see 3.1.7.4). Engine crankcase shall contain normal seasonal operational lubricant as specified on lubrication order, filled to operational level. DD Form 1397 shall be annotated to indicate grade of lubricant used.

3.2.4 Engine preservation (see 3.1.7.5). The engine shall not require preservation for Level B shipment and storage.

3.2.5 Air cleaners (see 3.1.7.6). The air cleaners shall neither be disassembled nor sealed for Level B shipment and storage.

3.2.6 Fuel tanks (see 3.1.7.8). Unless otherwise specified (see 6.1), vehicles shall be shipped without draining residual fuel from the fuel tanks.

3.2.7 Personnel heater and fuel pump (see 3.1.7.7). Unless otherwise specified, personnel heaters and fuel pumps shall be in a ready-to-use condition.

3.2.8 Vehicle closure. Vehicle closures shall not be provided on vehicles processed for Level B shipment and storage.

3.2.9 Exposed vehicle openings. Vehicle openings, such as the cupola machine gun cover opening, cupola shell ejection port, exposed portions of the cupola gun shield, exterior race ring spaces between the turret and hull and between the cupola and turret, and the rangefinder blister ports, shall be sealed with four-inch wide tape conforming to type IV of PPP-T-60 or type II of MIL-T-22085. Exterior surfaces of the cupola vision blocks shall be gently cleaned with a solution of detergent conforming to P-D-220, and warm water, rinsed with clean water, and dried. Cleaned optical surfaces shall be covered with pieces of lightweight chipboard, approx. size 7-1/2 by 2-1/4 inches, conforming to UU-C-282, or other suitable filler, and sealed to the cupola with type IV of PPP-T-60 or type II of MIL-T-22085 tape. All surfaces to which tape is applied shall be clean and dry to assure effective tape adhesion.

3.2.10 Ventilation. All access plates and gaskets on the underside of the vehicle, and the lower bulkhead door, shall be removed, and exposed surfaces shall be preserved (see (3.1.7.14). Removed items shall be processed in accordance with 3.1.8.8. Both drain valves shall be secured in the open position. The driver's center daylight periscope opening cover shall not be blocked open and screened as described in 3.1.7.14 and figure B6. The following shall be stenciled on the exterior of the vehicle: "INSTALLL ACCESS PLATES, COVERS, GASKETS, AND CLOSE DRAIN VALVES BEFORE OPERATING VEHICLE".

3.2.11 Cargo straps and fender boxes. Fabric retaining straps on exterior cargo racks and in the fender boxes shall be removed, identified with their Army part numbers, and placed in a plastic bag conforming to type II, class B, style 2 of MIL-B-117. The bag shall be closed and stowed inside the vehicle. Fender box covers shall be closed, and handles shall be locked and secured with a suitable gage wire conforming to QQ-W-461.

3.3 Loading.

3.3.1 Loading on flat cars. Loading of vehicles on open top railcars shall be in accordance with the applicable requirements of Section 1, Association of American Railroads Manual, "Loading of Commodities on Open Top Cars", and figure 80 and 81 of section 6 of the AAR rules, "Loading of Department of Defense Material on Open Top Cars." The quantity of units to be loaded on each railcar, the type of railcar, and the applicable transportation data shall be as authorized by the responsible government transportation office. (See 3.1.9.1 for preparing closure cover and installed gun tube for loading acitivities.)

3.3.2 Reprocessing engine after loading - level A. If engine is operated in connection with moving the vehicle to loading area, or during vehicle loading or unloading, the engine shall be reprocessed as specified in

3.1.7.5. Vehicle cover shall be rolled clear of engine intake and exhaust to provide air circulation and to prevent damage to cover. After reprocessing of engine, vehicle closure shall be replaced in its original position.

3.3.2.1 Reprocessing engine after loading - level B. If engine is operated in connection with movement of vehicle during loading or unloading, additional processing of engine will not be required.

3.4 Marking. In addition to any special marking required in the contract or order, vehicle shall be marked in accordance with 3.4.1 and MIL-STD-129.

3.4.1 Lifting points. The legend "LIFT HERE" with arrow pointing to the lifting eye shall be stenciled adjacent to each lifting eye using black enamel conforming to TT-E-527, No. 37038. Stenciling to be 3/4-inch high minimum.

3.4.2 Shipping label adhesion. To assure effective adhesion when applied during cold weather, Military Shipment Labels, DD Form 1387, shall be cemented to vehicles with adhesive conforming to type I of MMM-A-1617. After mounting, labels shall be provided a protective coating in accordance with applicable provisions of MIL-STD-129.

3.5 Drive on/drive off capability. When vehicles are to be operated for loading or unloading (see 6.1), the following provisions shall apply.

3.5.1 Fuel tanks. Additional fuel shall be added, as required, to accomplish movement of vehicle.

3.5.2 Batteries and electrolyte. Batteries shall be filled with electrolyte, fully charged, and battery cables connected (ref. 3.1.8.1 and 3.1.8.2). After vehicle self-movement for loading or placement in storage, the main power lead to the master relay control box in the driver's compartment shall be disconnected and secured to preclude movement. A tag bearing the following message, "VEHICLE PRESERVED FOR DRIVE-AWAY CONDITION. BEFORE CRANKING, CONNECT HARNESS (CIRCUIT 81) TO MASTER RELAY BOX ON HULL FLOOR UNDER TURRET BASKET. ENGINE AND FUEL TANKS NOT PRESERVED", shall be located in a conspicuous place in the driver's compartment.

4. QUALITY ASSURANCE PROVISIONS

4.1 Responsibility for inspection. Unless otherwise specified in the contract or purchase order, the contractor is responsible for performance of all inspection requirements as specified herein. Except as otherwise specified in the contract or purchase order, the contractor may use any facilities suitable for the performance of the inspection requirements specified herein, unless disapproved by the Government. The Government reserves the right to perform any inspections set forth in the specification where such inspections are deemed necessary to assure supplies and services conform to prescribed requirements.

4.1.1 Inspection records. Supplier shall maintain records of all inspections performed and such records shall be readily available for review by the Government representative.

4.2 First production processed vehicle. Unless otherwise specified, the first production vehicle (see 6.1) shall be subjected to the inspections and tests specified in 4.5.1 and 4.5.2.

4.3 Production processed vehicles. All production processed vehicles shall be subjected to inspections and tests at the frequencies specified in 4.5.1 and 4.5.2.

4.4 Rejection. Failure of any processed vehicle to conform to the applicable requirements of this specification shall be cause for rejection of the vehicles by the Government. No vehicles shall be accepted until objective evidence that the supplier has corrected the condition causing the rejection has been provided to the Government.

4.5 Quality conformance inspection.

4.5.1 Materials. Except for materials which have been inspected by the Government at source, all materials to be used in processing of vehicles shall be inspected in accordance with the material specification; or certified inspection and test reports shall be provided which show that furnished materials conform to the detailed specifications. When materials are listed on a Qualified Products List, they shall be obtained from one of the approved sources indicated.

4.5.2 Processing. Except as otherwise specified herein, vehicles shall be inspected to determine conformance to this specification. Inspection shall include all items specified in table I and 4.5.2.1 through 4.5.2.5.

4.5.2.1 Cleaning. To determine conformance to 3.1.6.1, interior of vehicles shall be examined for cleanliness. One vehicle each day shall be tested for cleanliness in accordance with the applicable provisions of MIL-P-116. To determine conformance to 3.1.6.3, exterior of vehicle shall be examined for cleanliness. Surfaces to which tape is to be applied shall be examined for cleanliness before application (see 3.2.9).

4.5.2.2 Fuel tanks. To determine conformance to 3.1.7.8, the fuel tank interior shall be visually inspected to verify that specified processing has been accomplished.

4.5.2.3 Gun. Gun shall be examined to determine condition and effectiveness of processing. When reprocessing has been accomplished, it shall be examined for conformance to 3.1.7.10 and 3.1.7.10.1, or 3.1.7.11 and 3.1.7.11.1.

4.5.2.4 Coating compound thickness. A minimum of one vehicle per day shall be inspected for thickness of coating compound to determine conformance to 3.1.7.11.1. After four hours of drying, four 1-inch square specimens of barrier material shall be cut from areas (flat and contour) selected at random by the Government inspector, and measured for specified thickness.

4.5.2.5 Engine. To determine conformance to 3.1.7.5, interior of the engine from the first processed vehicle shall be examined for surface coverage. One cylinder head shall be removed to permit visual examination of

surfaces within the combustion chamber. Surfaces within the combustion chamber, including piston crown, cylinder wall, and chamber head, shall have a "wet" coating of preservative oil such as is obtained when an item is dipped or flushed with the oil. The processing method used to prepare the appoved preserved engine shall be applied to subsequent production vehicles (see 3.1.1).

TABLE I. Processing inspection.

(See indicated paragraphs for Level A and B requirements)

Component or processing activity	Cleaning	Preservation		Packaging/ Stowage
	Levels A & B	Level A	Level B	Levels A & B
Disassembly		3.1.3		3.1.3
Matchmarking				3.1.4
Record forms				3.1.5
Cleaning and drying	3.1.6			
Interior of vehicle	3.1.6.1			
Battery supports & retainers	3.1.6.2			
Backrests, seats, headrests and crash pads	3.1.6.3			
Exterior of vehicle	3.1.6.4			
Gun	3.1.6.5			
Fire control items	3.1.6.6			
Preservation		3.1.7	3.1.7	
Relubrication		3.1.7.1	3.1.7.1	
Battery supports & retainers		3.1.7.2	3.1.7.2	
*Transmission & final drives		3.1.7.3	3.2.2	
*Engine crankcase		3.1.7.4	3.2.3	
*Engine preservation		3.1.7.5	3.2.4	
Preservation through fuel system and combustion chamber		3.1.7.5.1	3.2.4	
Engine purging		3.1.7.5.2	3.2.4	
Preservation of turbochargers		3.1.7.5.3	3.2.4	
Preservation through exhaust system		3.1.7.5.4	3.2.4	
Preservation through dipstick shroud opening & oil filler tube		3.1.7.5.5	3.2.4	
Air cleaners		3.1.7.6	3.2.5	

TABLE I. Processing inspection - Continued

(See indicated paragraphs for Level A and B requirements)

Component or processing activity	Cleaning	Preservation		Packaging/ Stowage
	Levels A & B	Level A	Level B	Levels A & B
Personnel heater & fuel pump		3.1.7.7	3.2.7	
Fuel tanks		3.1.7.8	3.2.6	
Turret ring bearing		3.1.7.9	3.1.7.9	
105MM gun tube installed		3.1.7.10	3.1.7.10	
Muzzle plug		3.1.7.10.1	3.1.7.10.1	
Breech mechanism		3.1.7.10.2	3.1.7.10.2	
Recoil mechanism (after exercising)		3.1.7.10.4	3.1.7.10.4	
Replenisher (after exercising)		3.1.7.10.6	3.1.7.10.6	
Gun mount		3.1.7.10.7	3.1.7.10.7	
105MM gun tube removed from mount				3.1.7.11
Removed gun tube		3.1.7.11.1	3.1.7.11.1	3.1.7.11
Gun mount after removal of gun tube		3.1.7.11.2	3.1.7.11.2	3.1.7.11.2
Breech mechanism after removal of gun tube		3.1.7.11.3	3.1.7.11.3	
Reinstallation of gun tube in mount	3.1.7.11.4	3.1.7.11.4	3.1.7.11.4	
Fire control items		3.1.7.12	3.1.7.12	
Commander's periscope		3.1.7.12.1	3.2.1	3.1.8.4
Gunner's telescope & periscope		3.1.7.12.2	3.1.7.12.2	
Instrument lights		3.1.7.12.3		3.1.8.5
Range finder		3.1.7.12.4	3.1.7.12.4	
Purging of range finder		3.1.7.12.4.1	3.1.7.12.4.1	
Commander's periscope link		3.1.7.12.5	3.1.7.12.5	3.1.7.12.5
Mounts, ballistic computer and drive		3.1.7.12.6	3.1.7.12.6	
Infinity sight		3.1.7.12.7	3.2.1	
Level vial covers		3.1.7.12.8	3.1.7.12.8	
Exposed optical glass		3.1.7.12.9	3.1.7.12.9	
Driver & loader vision equipment		3.1.7.13	3.1.7.13	3.1.8.5
Ventilation		3.1.7.14	3.2.10	
Fire extinguishers		3.1.7.15	3.1.7.15	
Hatches		3.1.7.16	3.1.7.16	
Miscellaneous		3.1.7.17	3.1.7.17	

TABLE I. Processing inspection - Continued.

(See indicated paragraphs for Level A and B requirements)

Component or processing activity	Cleaning	Preservation		Packaging/ Stowage
	Levels A & B	Level A	Level B	Levels A & B
Packaging				
Dry charged batteries & cables (Level A only)				3.1.8.1
Electrolyte (Level A only)				3.1.8.2
Backrests, seats, head-rests & crash pads				3.1.8.3
Fire control items (Level A only)				3.1.8.4
Driver & loader vision equipment				3.1.8.5
Wind sensor and probe				3.1.8.6
Fire extinguishers				3.1.8.7
Access plates, gaskets & drain plugs				3.1.8.8
Tow hooks				3.1.8.9
Basic issue items (BII)				3.1.8.10
Telephone box				3.1.8.11
Gun tube thermal shroud				3.1.8.12
Vehicle closure		3.1.9	3.2.8	
Security of sensitive cargo				3.1.10
Exposed vehicle openings (Level B)				3.2.9
Cargo straps & fender boxes				3.2.11
Loading on flat cars				3.3.1
Reprocessing engine after loading - Level A				3.3.2
- Level B				3.3.2.1
Marking				3.4
Lifting points				3.4.1
Shipping label adhesion				3.4.2
Drive on drive off				3.5
Fuel tanks				3.5.1
Batteries and electrolyte				3.5.2

*Inspect DD Form 1397

5. PACKAGING

This section is not applicable to this specification.

5. PACKAGING

This section is not applicable to this specification.

6. NOTES

6.1 Ordering data. Acquisition documents should specify the following:

a. Title, number, and date of this specification.
b. Applicable level of processing (see 1.2).
c. If inspection of the first production processed vehicle is required (see 3.1.1).
d. If vehicle closure is required (see 3.1.9).
e. If additional fuel shall be supplied (see 3.5.1).
f. If vehicle drive-on/drive-off capability is required (see 3.5).

6.2 Safety precautions. Caution should be exercised in handling carbon dioxide (CO_2) fire extinguisher cylinders. Cylinders should not be dropped; permitted to strike each other, or handled roughly. Extreme care should be exercised during the reinstallation operation to avoid tripping fire extinguisher control system (see 3.1.7.15).

6.3 Forms. Copies of the "Equipment Log Book" and all required forms (see 3.1.5) will be furnished to the supplier by the Government at least 30 days before shipment of the vehicles requird by the contract delivery schedule.

6.4 Installation and removal of 105MM gun tube. Installation and removal instructions for the 105MM gun tube are specified in Technical Manual TM 9-2350-215-20. Installation and removal instructions for the gun tube thermal shroud are contained in Technical Manual TM9-2350-253-10.

Custodian:
Army - AT

Preparing activity:
Army - AT

Project No. PACK-A293

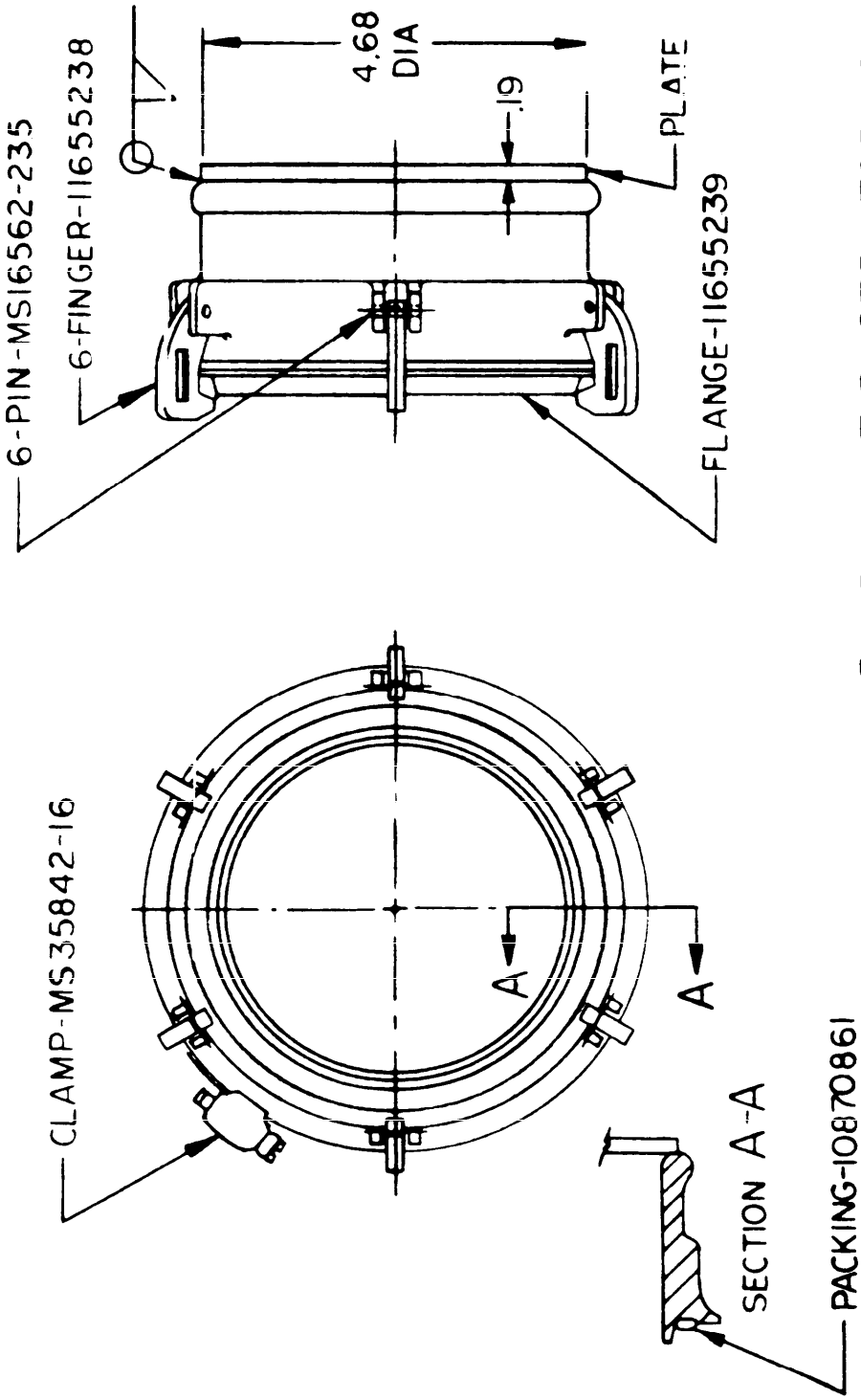

TURBOCHARGER AIR INLET RESTRICTOR COVER

FIGURE A1
(SH 1 OF 2)

TOLERANCE ±.02

REQUIREMENTS

MATERIALS:

- Flange, Fingers, Pins, Clamp, and Packing: Requirements as specified on Army and Military Standard drawings indicated on SH 1.

- Plate: Aluminum plate 6061, Temper T6, 5083 or 5456, Spec. QQ-A-200.

WELDING:

- Weld Plate to Flange per MIL-W-45205, Class A. Use aluminum filler conforming to MIL-E-16053 or QQ-R-566. Air-tight joint required.

BONDING:

- Bond Packing to Flange with adhesive MMM-A-1617, Type II. Cured bond to withstand 5-lb pull per inch of width perpendicular to bonded surface.

TURBOCHARGER AIR INLET RESTRICTOR COVER
FIGURE A1
(SH 2 of 2)

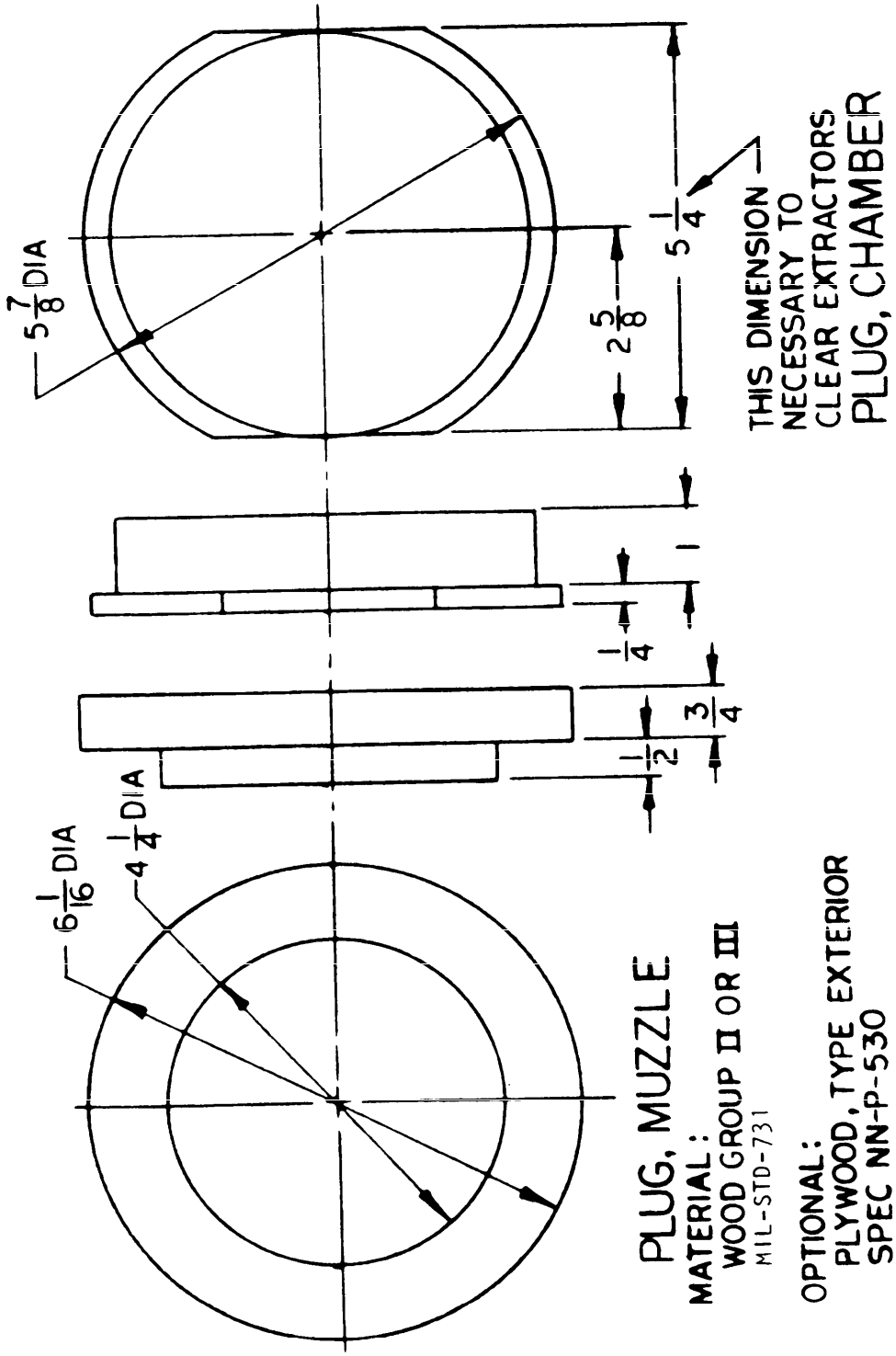

PLUGS, MUZZLE & CHAMBER
FIGURE B1

INSTALLAITON SCREENS IN BRAKE ACCESS OPENING

ITEM NO.	FIG. NO.	NO. REQ'D.	NAME	MAT'L.	STOCK SIZE
1	B3	2	SCREEN	STEEL	GALVANIZED WIRE .047 DIA. 4X4 MESH
2	—	24	WASHER	STEEL	3/8 I.D. PLAIN
3	—	12	SPACER	STEEL TUBING	9/16 O.D. X .083 WALL X 7/8 LG.

INSTALLATION SCREENS IN FUEL TANK ACCESS OPENING

ITEM NO.	FIG. NO.	NO. REQ'D.	NAME	MAT'L.	STOCK SIZE
4	B4	2	SCREEN	STEEL	GALVANIZED WIRE .047 DIA. 4X4 MESH
5	—	8	SPACER	STEEL TUBING	11/16 O.D. X .065 WALL X 9/16 LG.
6	—	16	WASHER	STEEL	1/2 I.D. PLAIN

FIGURE B2

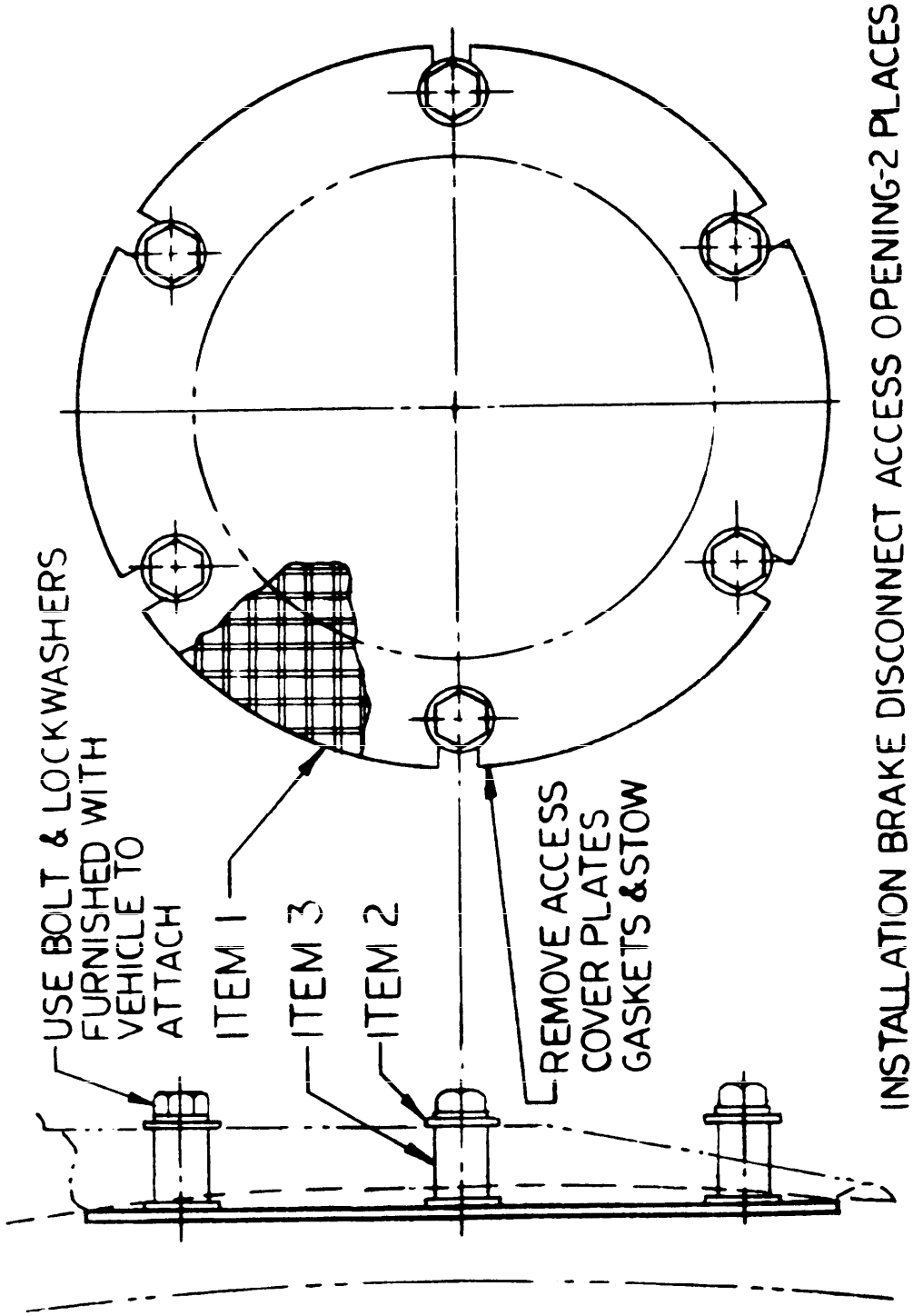

INSTALLATION BRAKE DISCONNECT ACCESS OPENING-2 PLACES

FIGURE B3

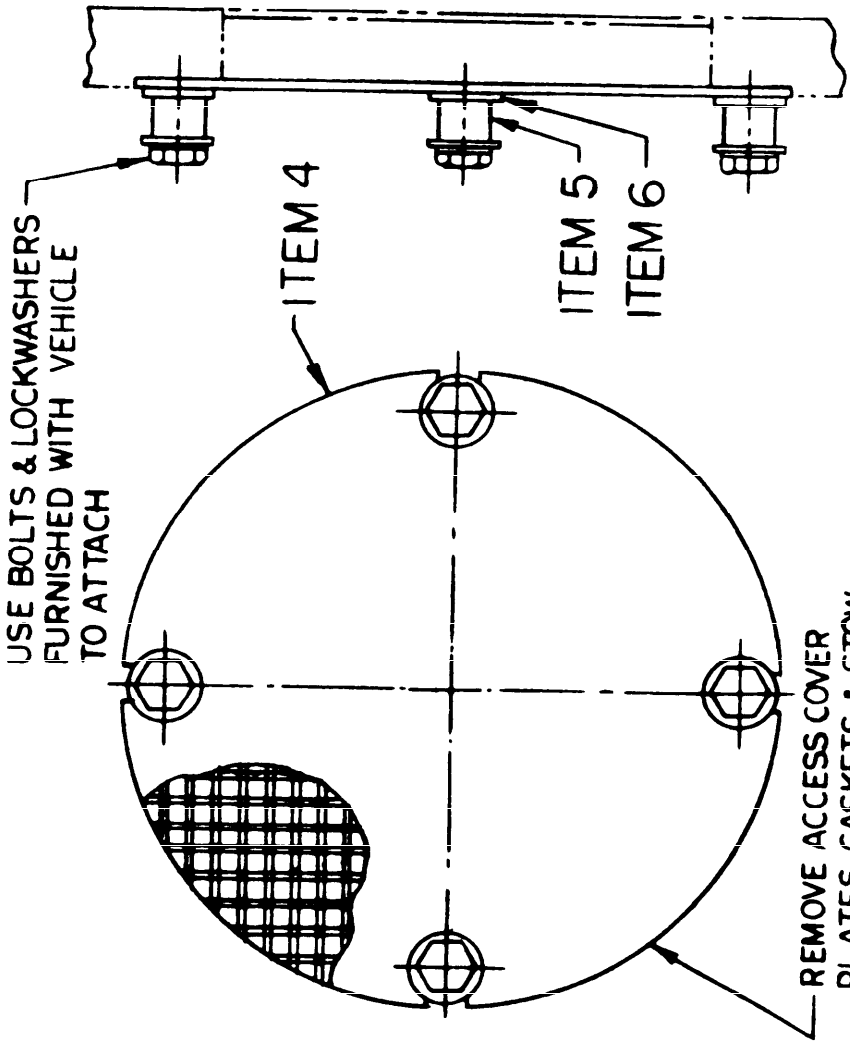

INSTALLATION-FUELTANK DRAIN ACCESS OPENING TWO PLACES

FIGURE B4

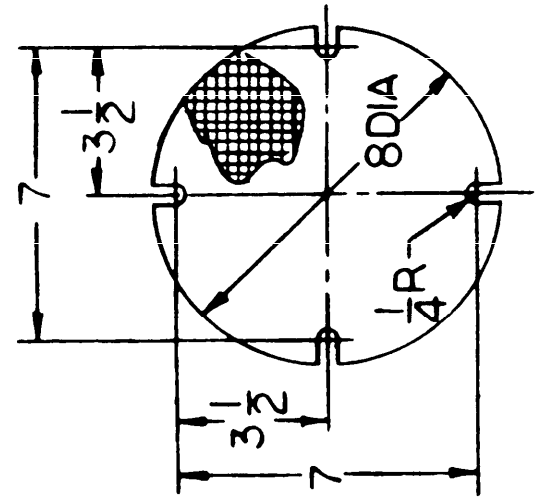

SCREEN ITEM 4

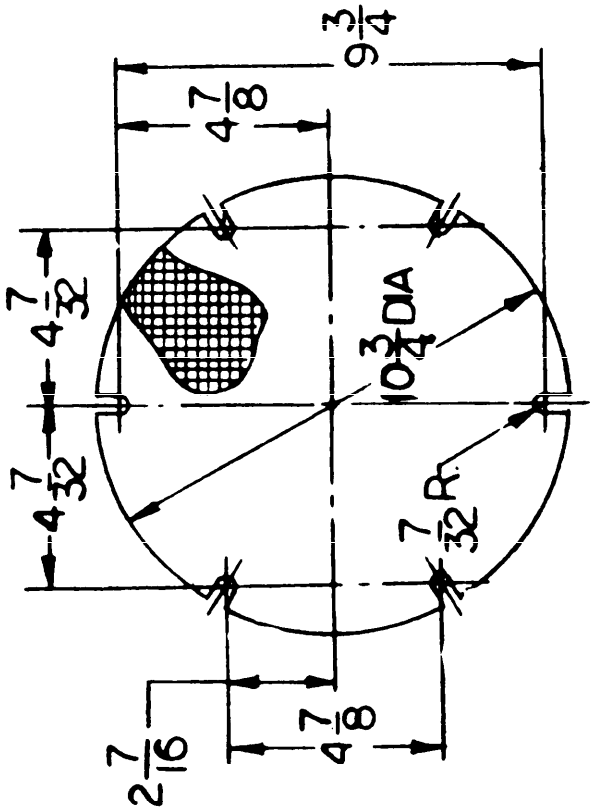

SCREEN ITEM 1

FIGURE B5

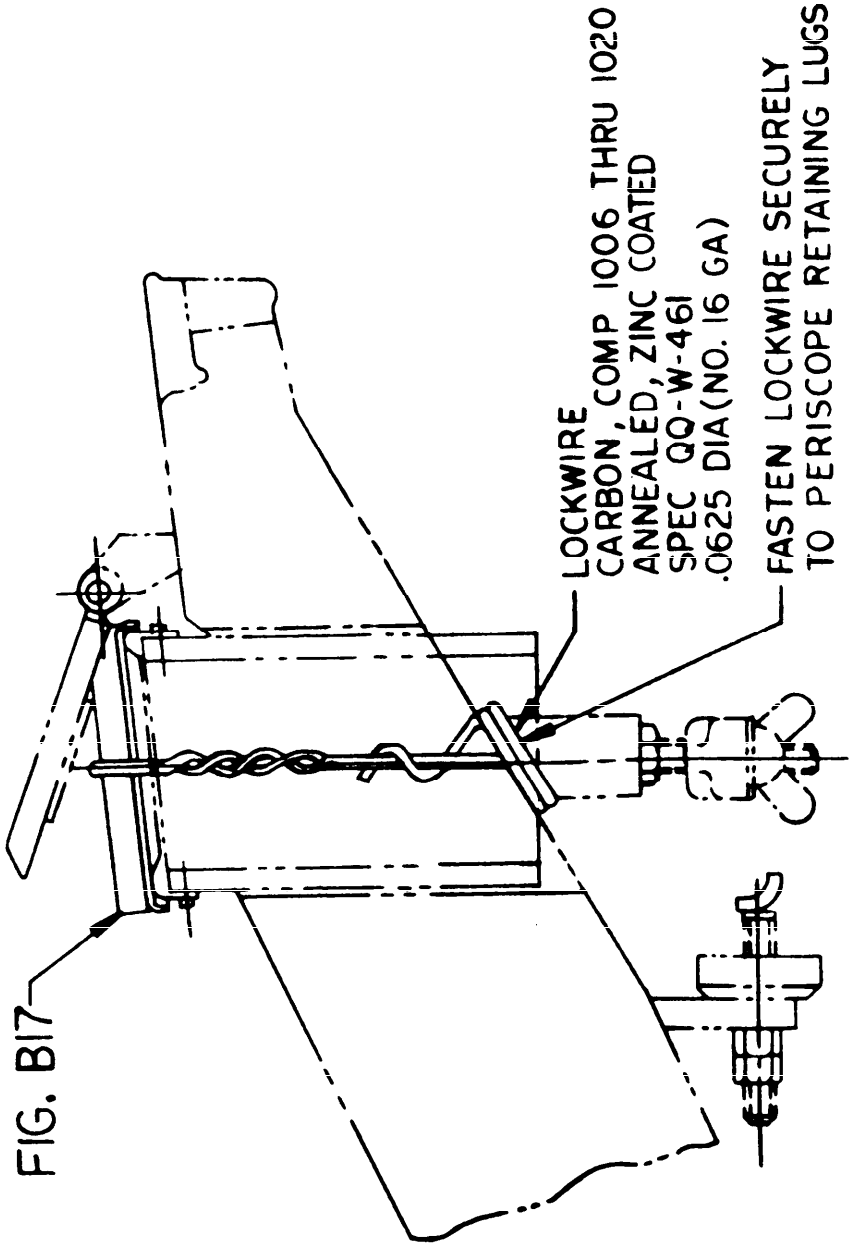

INSTALLATION OF SCREEN IN
DRIVERS PERISCOPE OPENING
(CENTER OPENING ONLY)
FIGURE B6

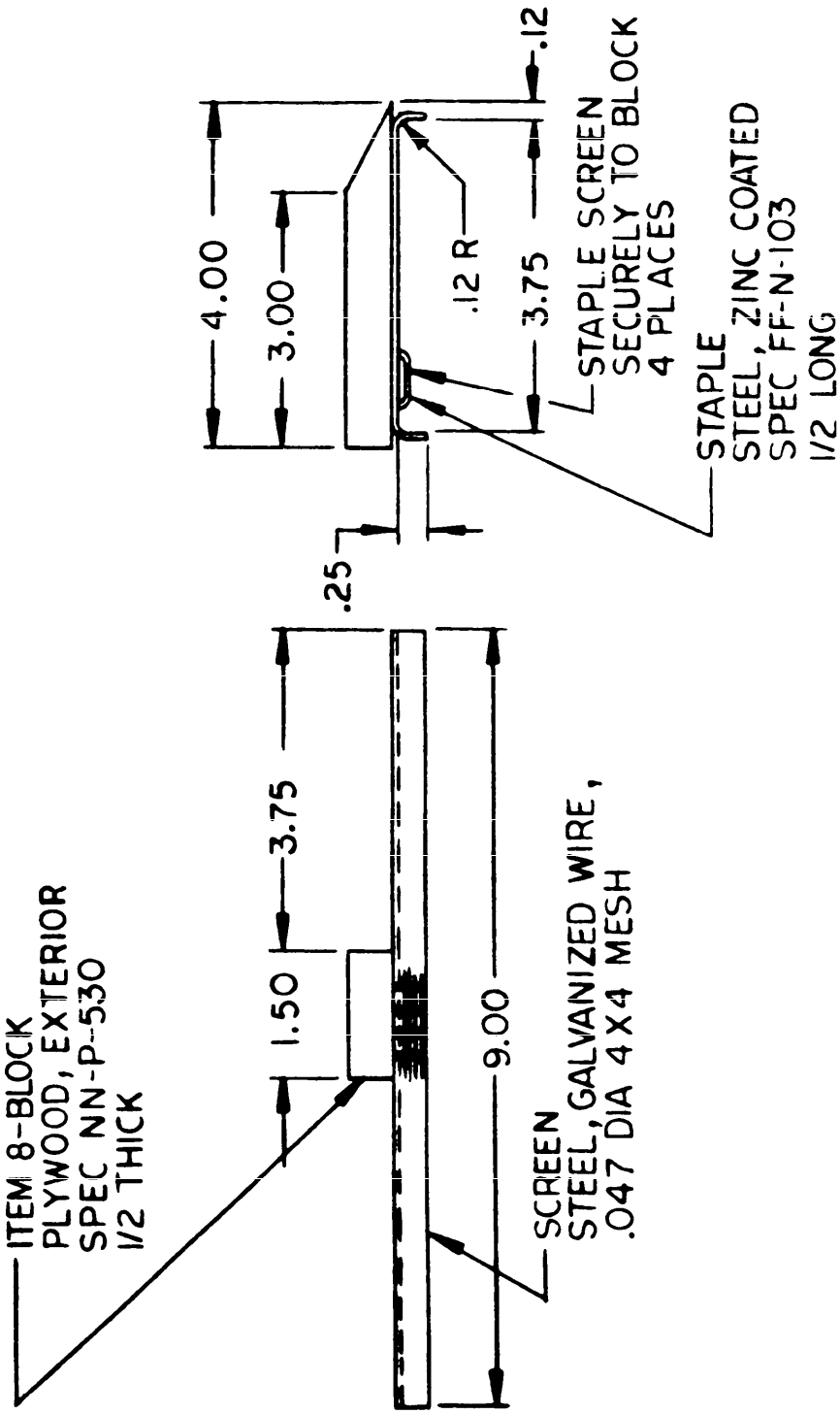

SCREEN ASSEMBLY
FIGURE B7

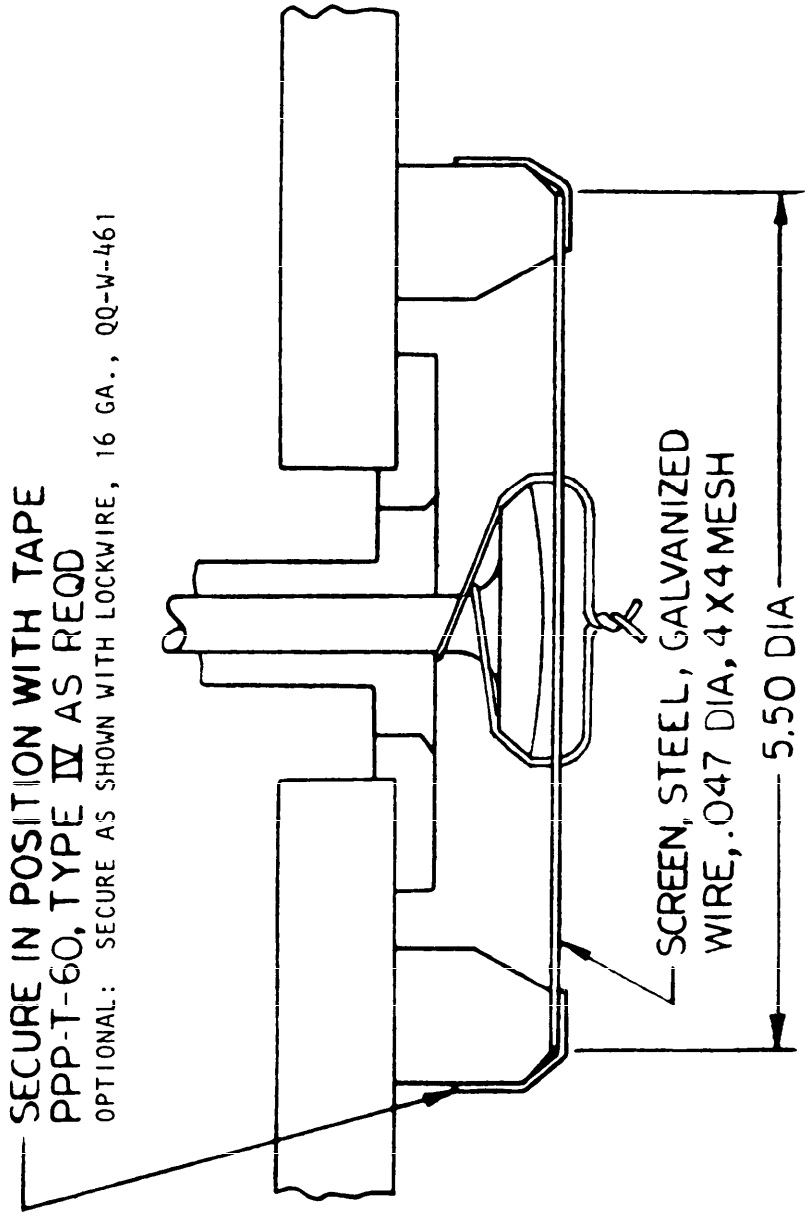

INSTALLATION, DRIVER COMPARTMENT DRAIN VALVE SCREEN

FIGURE B8

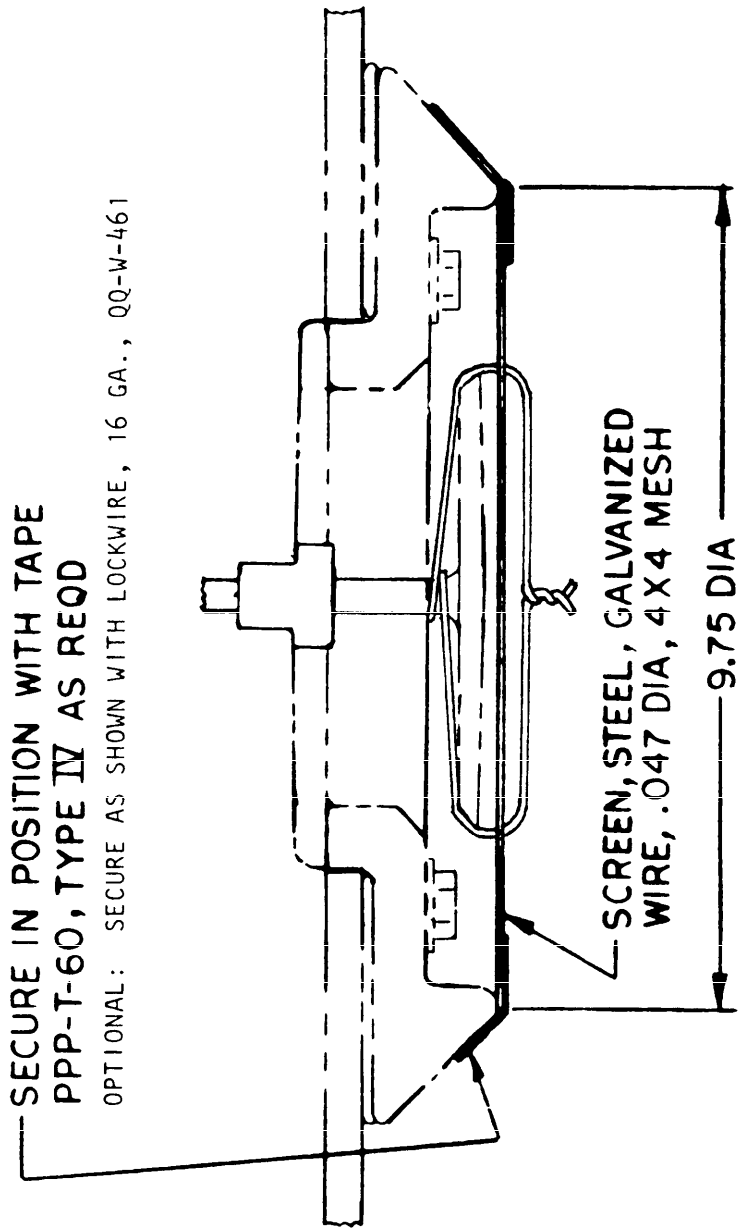

INSTALLATION ENGINE COMPARTMENT DRAIN VALVE SCREEN
FIGURE B9

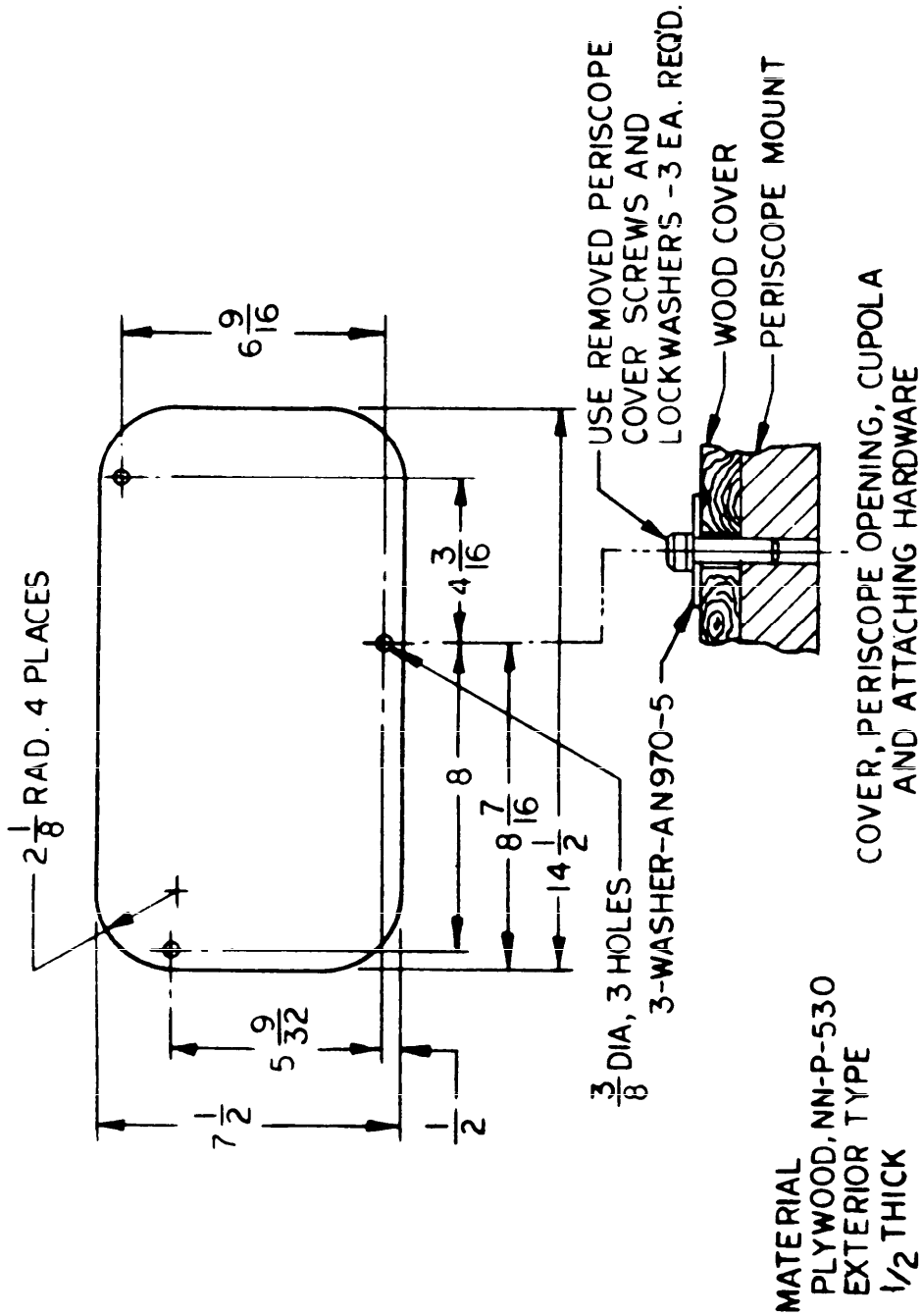

FIGURE B10

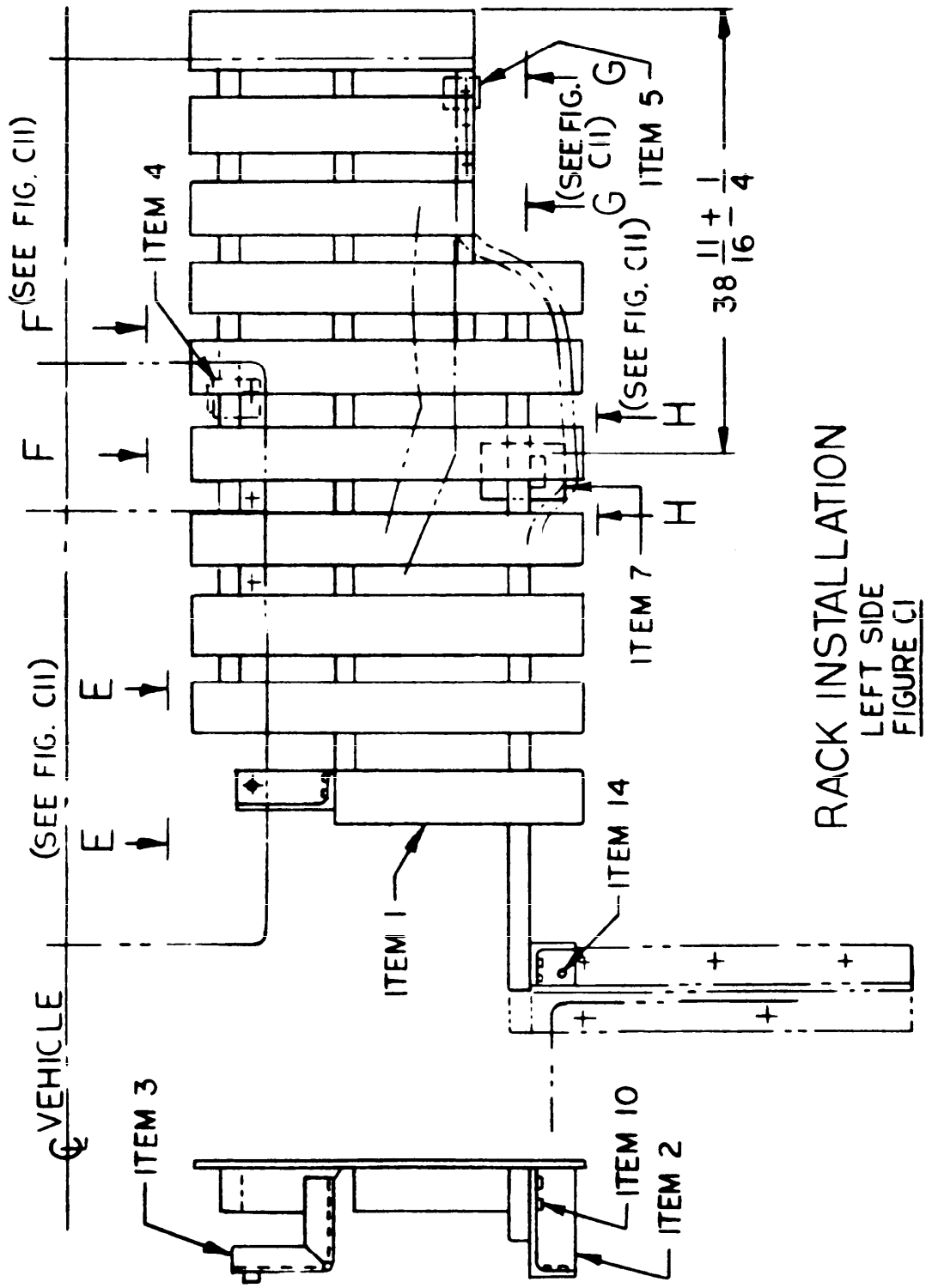

RACK INSTALLATION
LEFT SIDE
FIGURE CI

INSTALLATION-B11 RACK (LEFT)

ITEM NO.	FIG. NO.	NO. REQD	NAME	MATL	STOCKSIZE
1	C5	1	RACK ASSY	—	———
2	C19	1	BRACKET	ANGLE IRON	SEE DETAIL
3	C17	1	BRACKET	ANGLE IRON	SEE DETAIL
4	C12	1	BRACKET	STEEL	SEE DETAIL
5	C12	1	BRACKET	STEEL	SEE DETAIL
7	C14	1	SUPPORT ASSY	—	SEE DETAIL
8	C14	1	SUPPORT	*	SEE DETAIL
9	—	1	PLATE	*	1X6X8
10	—	9	LAG BOLT	—	1/2 X 2 LG
11	—	2	LAG BOLT	—	1/2 X 3 1/2 LG
41	—	2	NAIL	—	8D
13	—	1	SCREW	—	3/8-24X1 3/4 LG
14	—	1	SCREW	—	1/2-13X1 3/4 LG
46	—	1	SCREW	—	3/8-24X3 LG
17	—	2	WASHER	—	1/2 I.D. PLAIN

* MATERIAL:
WOOD GROUP II OR III
MIL-STD-731

FIGURE C2

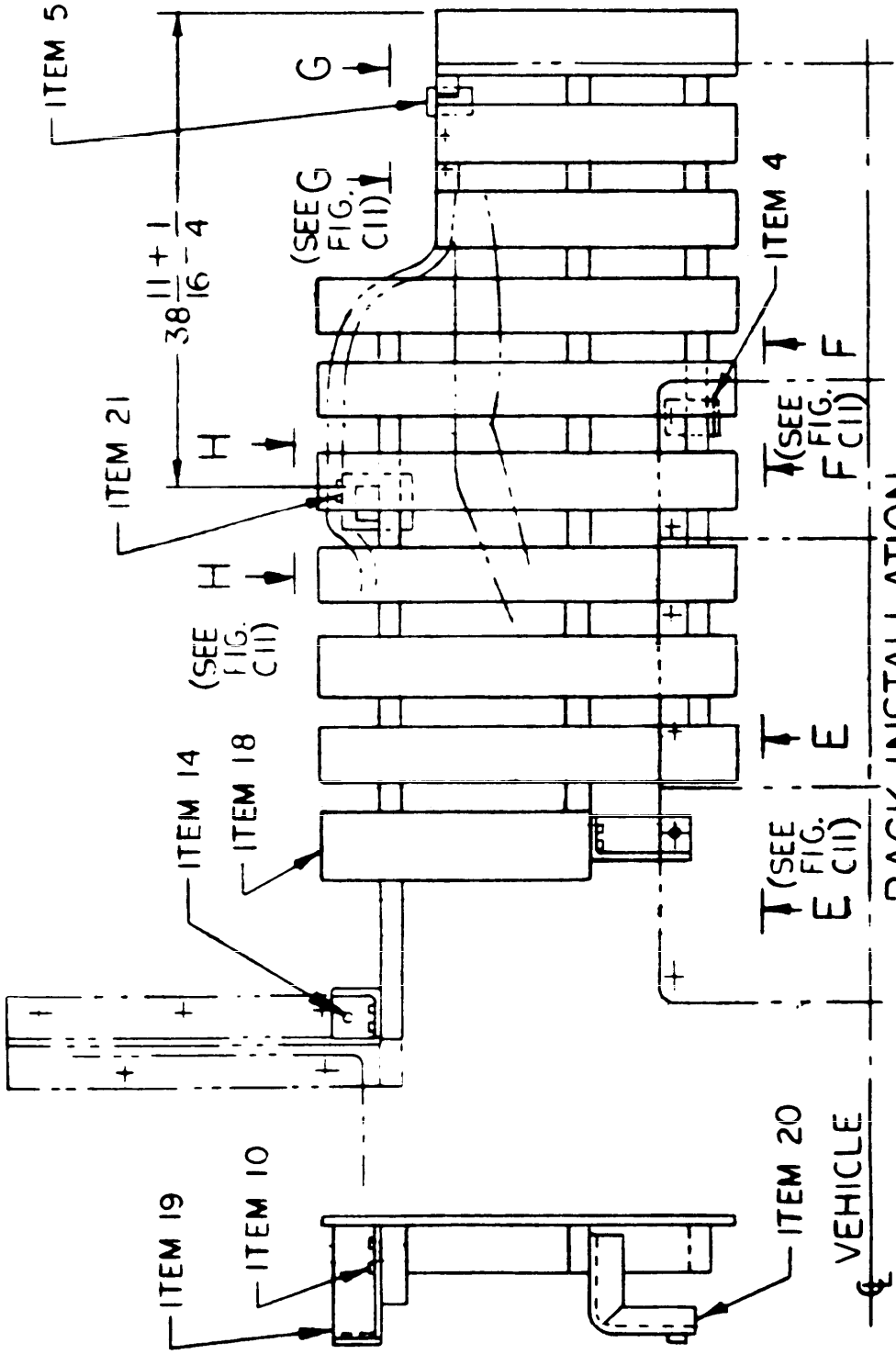

RACK INSTALLATION
RIGHT SIDE
FIGURE C3

INSTALLATION-B11 RACK (RIGHT)

ITEM NO.	FIG. NO.	NO. REQD	NAME	MATL	STOCK SIZE
18	C7	1	RACK ASSY	—	—
19	C19	1	BRACKET	ANGLE IRON	SEE DETAIL
20	C17	1	BRACKET	ANGLE IRON	SEE DETAIL
4	C12	1	BRACKET	STEEL	SEE DETAIL
5	C12	1	BRACKET	STEEL	SEE DETAIL
21	C14	1	SUPPORT ASSY	—	SEE DETAIL
22	C14	1	SUPPORT	*	SEE DETAIL
9	—	1	PLATE	*	1X6X8
10	—	9	LAG BOLT	—	1/2 X 2 LG
11	—	2	LAG BOLT	—	1/2 X 3 1/2 LG
41	—	2	NAIL	—	8D
13	—	1	SCREW	—	3/8-24 X 1 3/4 LG
14	—	1	SCREW	—	1/2-13 X 1 3/4 LG
46	—	1	SCREW	—	3/8-24 X 3 LG
17	—	2	WASHER	—	1/2 I.D. PLAIN

* MATERIAL:
WOOD GROUP II OR III
MIL-STD-731

FIGURE C4

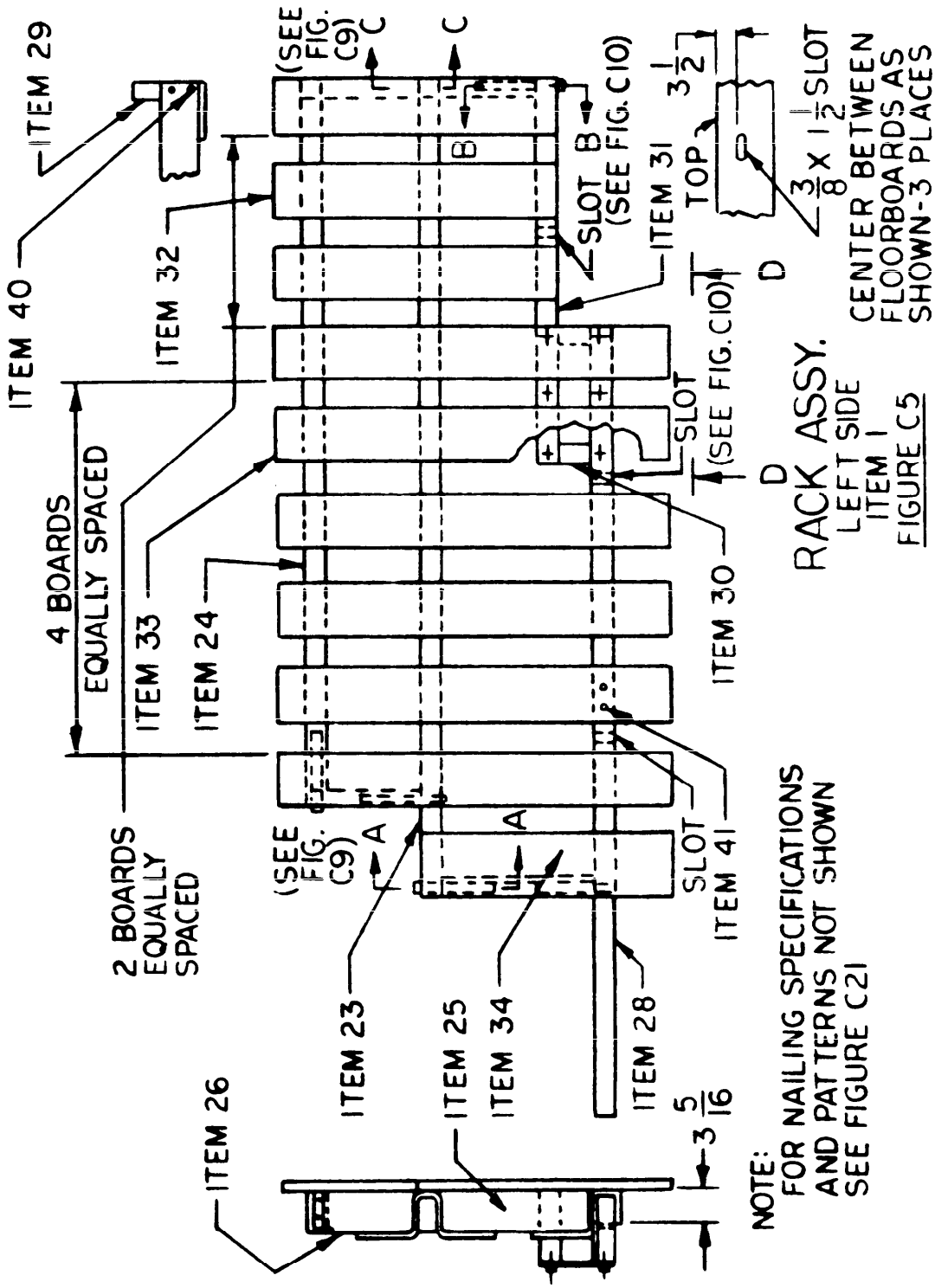

B11 RACK ASSY (LEFT)

ITEM NO.	FIG. NO.	NO. REQD	NAME	MATL	STOCK SIZE
23	—	1	INTERMED MEMBER	*	2X4X85 1/8
24	C15	1	CENTER MEMBER	*	SEE DETAIL
25	—	1	FRONT BRACE	*	2X4X16 5/8
26	—	1	FRONT INTER. MEM.	*	2X4X10 3/4
28	—	1	OUTSIDE MEMBER	*	2X8X88
29	C13	1	REAR BRACE	*	SEE DETAIL
30	—	2	BRACE	*	2X8X4
31	—	1	REAR MEMBER	*	2X8X38
32	—	3	FLOOR BOARD	*	1X6X29 3/4
33	—	6	FLOOR BOARD	*	1X6X41 1/4
34	—	1	FLOOR BOARD	*	1X6X26
37	C15	1	BRACE	*	SEE DETAIL
38	C16	1	STRAP	STEEL	SEE DETAIL
39	C16	4	STRAP	STEEL	SEE DETAIL
10	—	6	LAG BOLT	—	1/2 X 1 3/4 LG
40	—	27	NAIL	—	12D
41	—	62	NAIL	—	8D
42	—	14	NAIL	—	4D
17	—	6	WASHER	—	1/2 I.D. PLAIN

* MATERIAL:
WOOD GROUP II OR III
MIL-STD-731

FIGURE C6

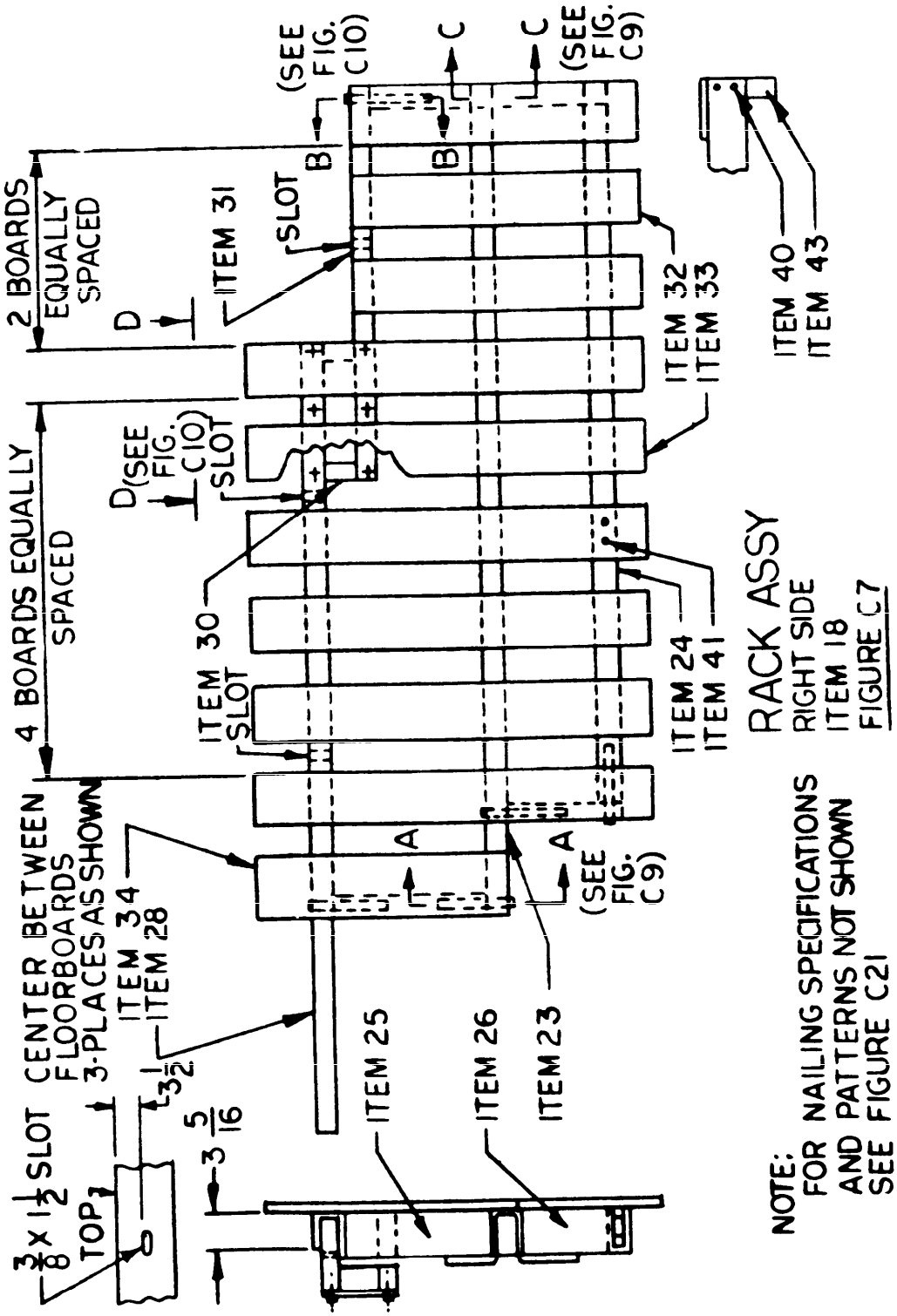

B11 RACK ASSY (RIGHT)

ITEM NO.	FIG. NO.	NO. REQD	NAME	MATL	STOCK SIZE
23	—	1	INTERMED MEMBER	*	2X4X85 1/8
24	C15	1	CENTER MEMBER	*	SEE DETAIL
25	—	1	FRONT BRACE	*	2X4X16 5/8
26	—	1	FRONT INTER. MEM.	*	2X4X10 3/4
28	—	1	OUTSIDE MEMBER	*	2X8X88
43	C18	1	REAR BRACE	*	SEE DETAIL
30	—	2	BRACE	*	2X8X4
31	—	1	REAR MEMBER	*	2X8X38
32	—	3	FLOOR BOARD	*	1X6X29 3/4
33	—	6	FLOOR BOARD	*	1X6X41 1/2
34	—	1	FLOOR BOARD	*	1X6X26
37	C15	1	BRACE	*	SEE DETAIL
38	C16	1	STRAP	STEEL	SEE DETAIL
39	C16	4	STRAP	STEEL	SEE DETAIL
10	—	6	LAG BOLT	—	1/2 X 1 3/4 LG
40	—	27	NAIL	—	12D
41	—	62	NAIL	—	8D
42	—	14	NAIL	—	4D
17	—	6	WASHER	—	1/2 I.D. PLAIN

* MATERIAL:
WOOD GROUP II OR III
MIL-STD-731

FIGURE C8

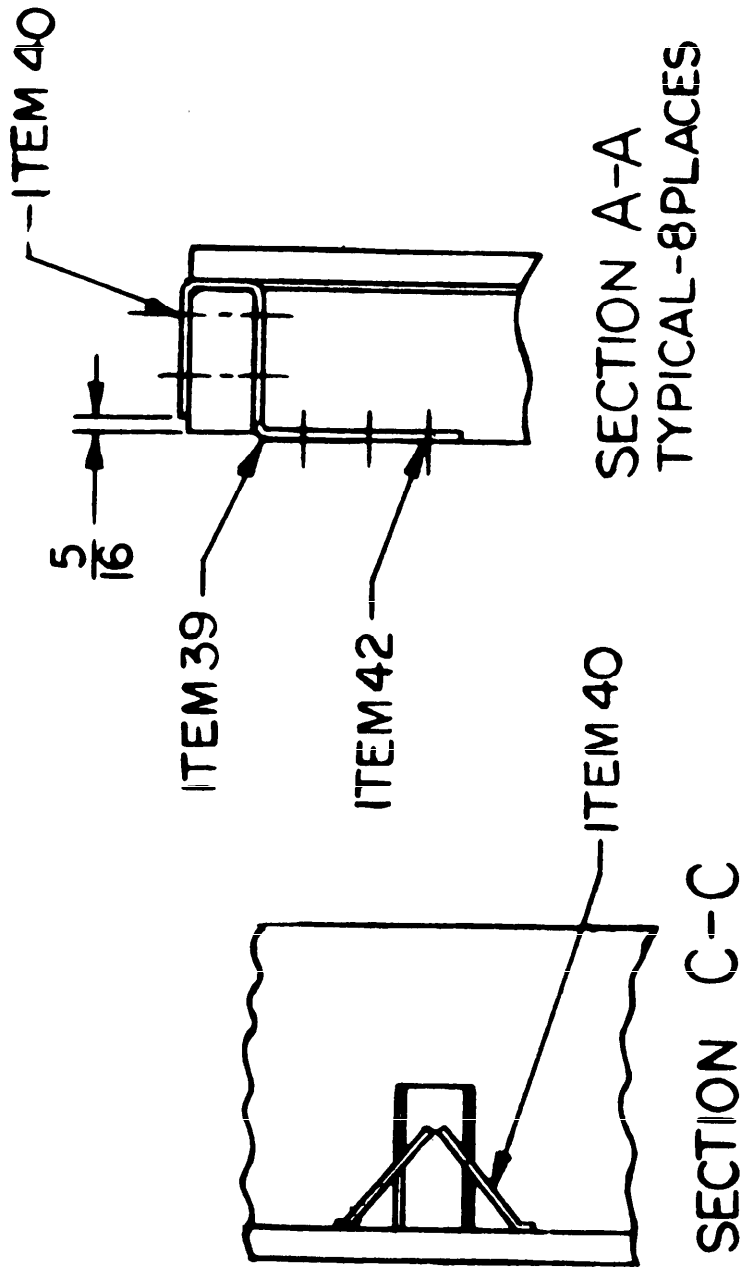

FIGURE C9

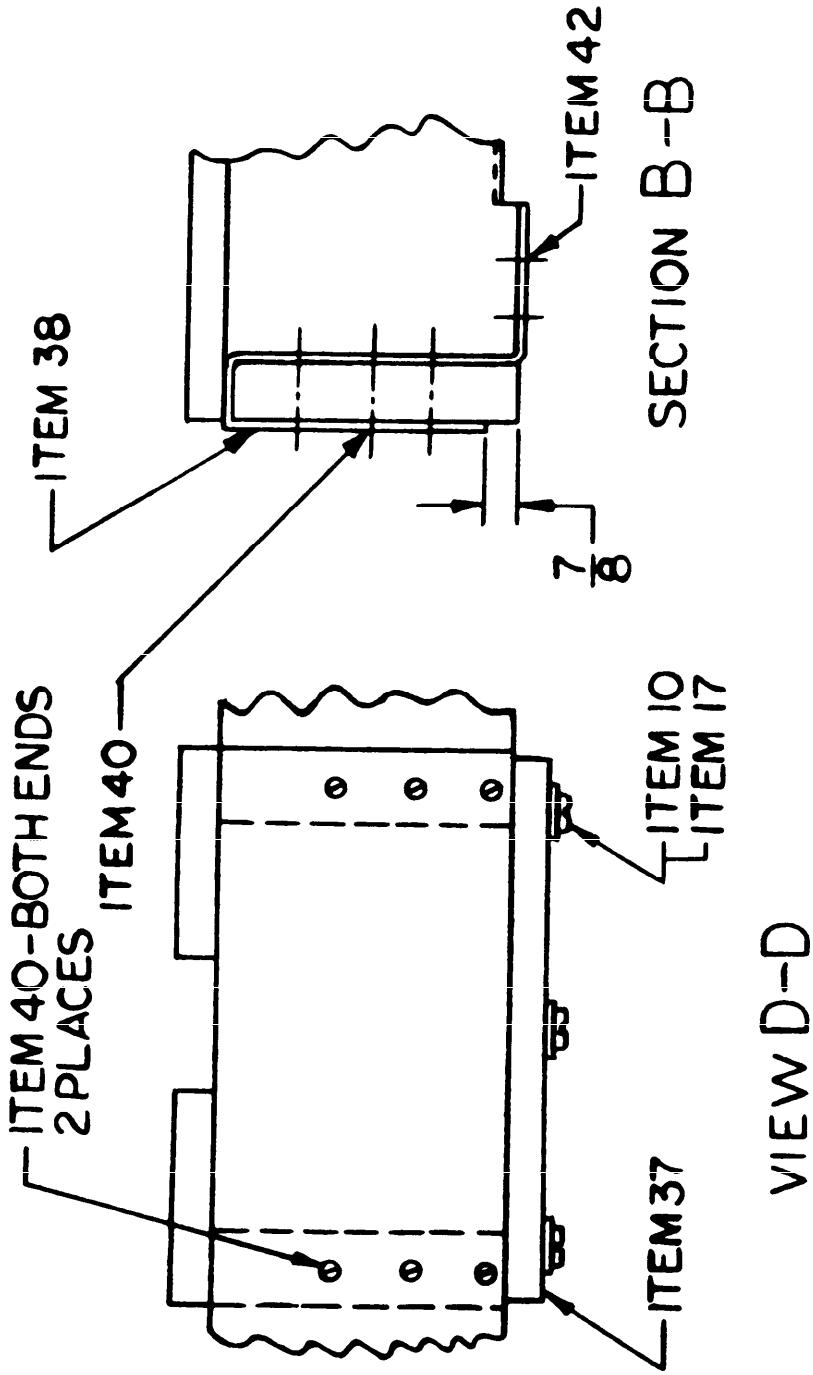

FIGURE C 10

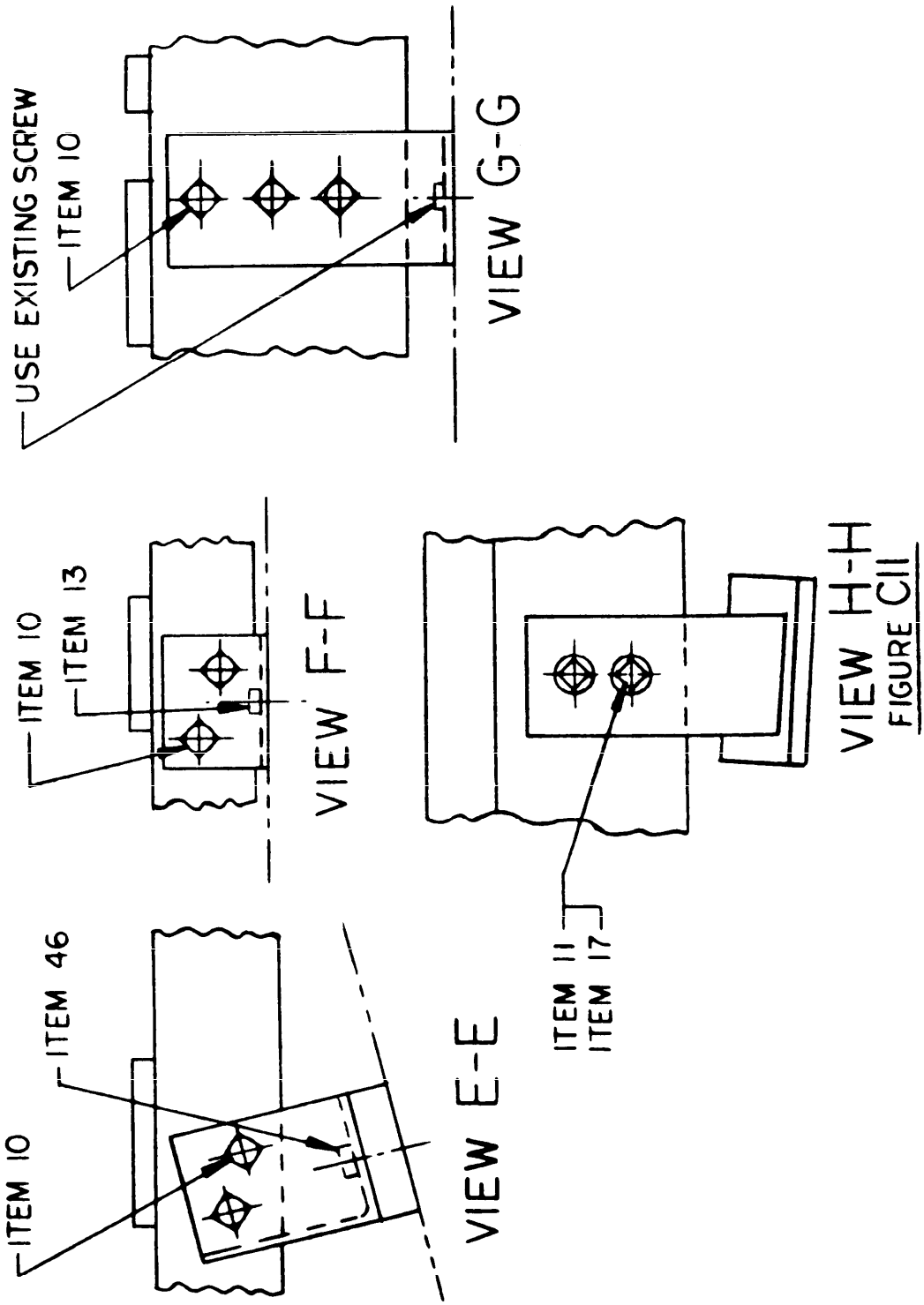

FIGURE CII

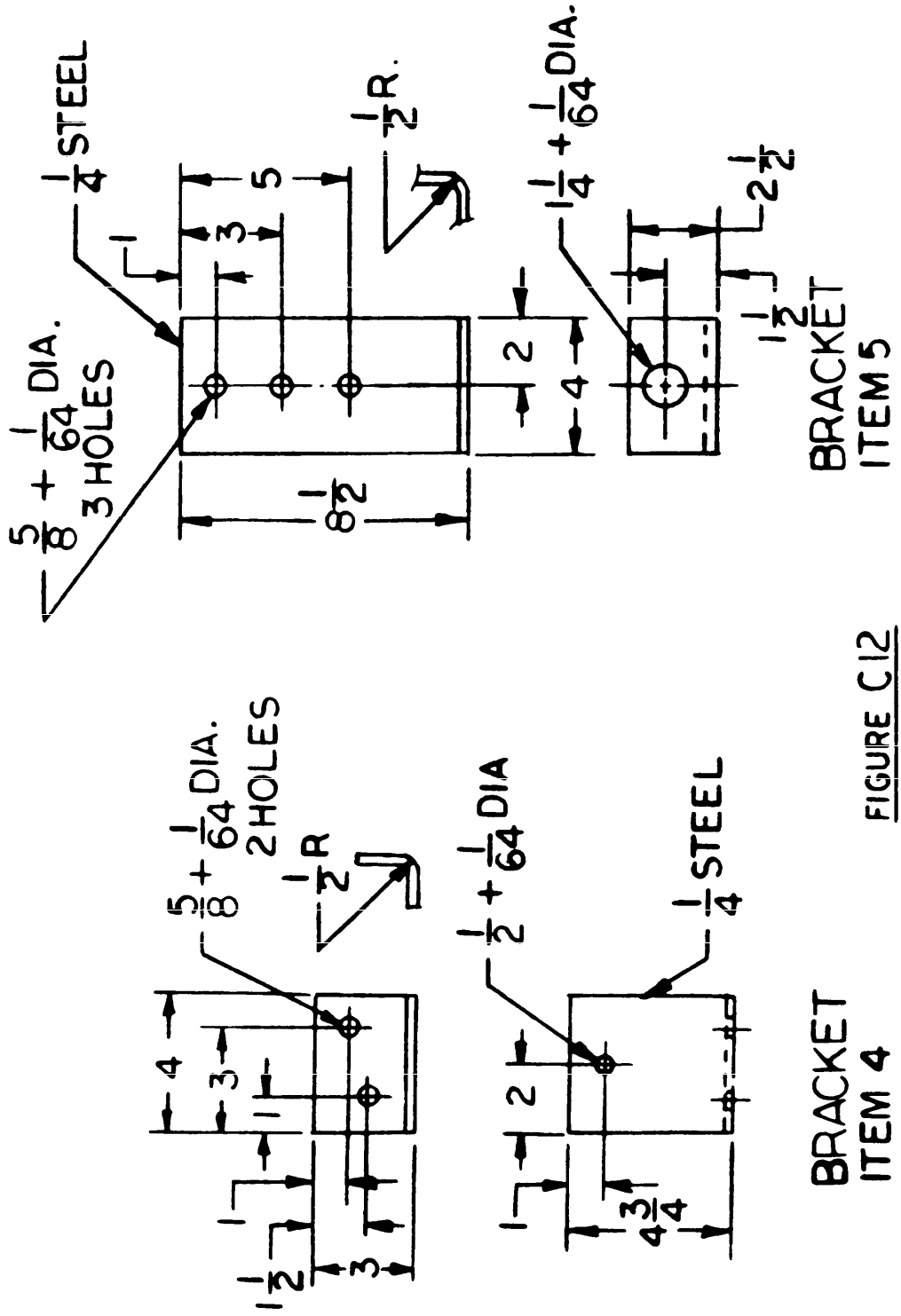

FIGURE C12

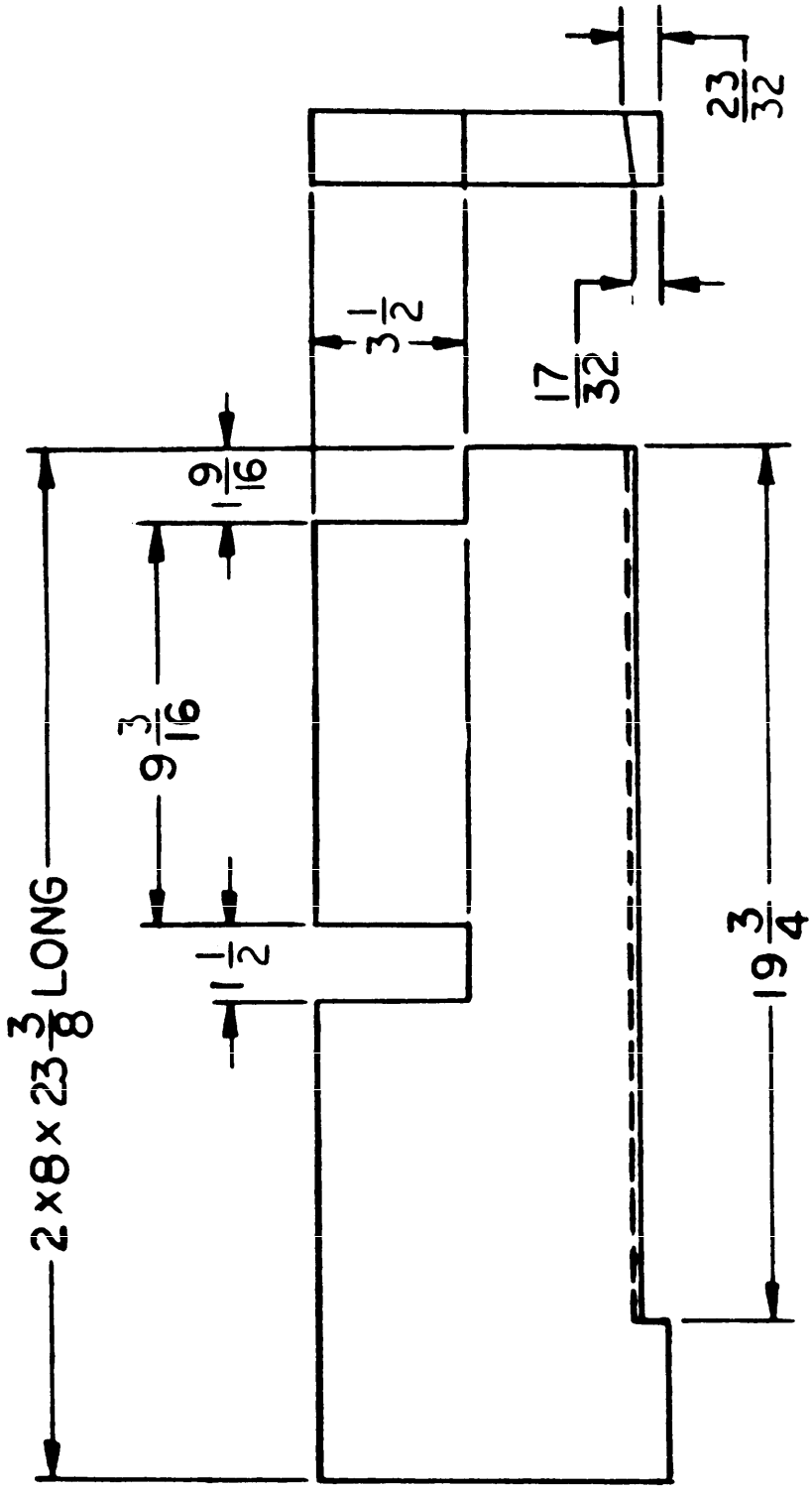

REAR BRACE-LEFT SIDE
ITEM 29
FIGURE C13

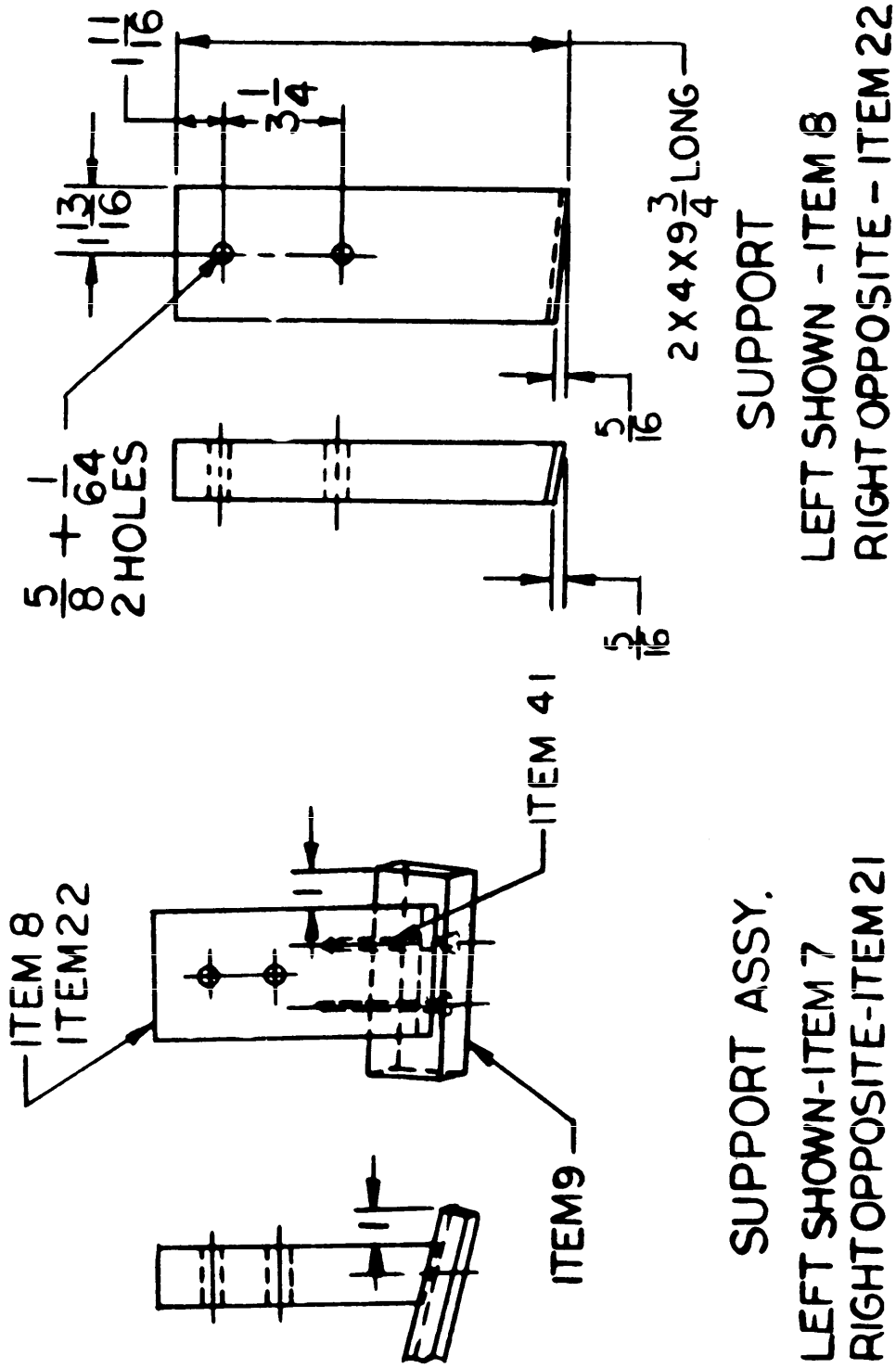

FIGURE C14

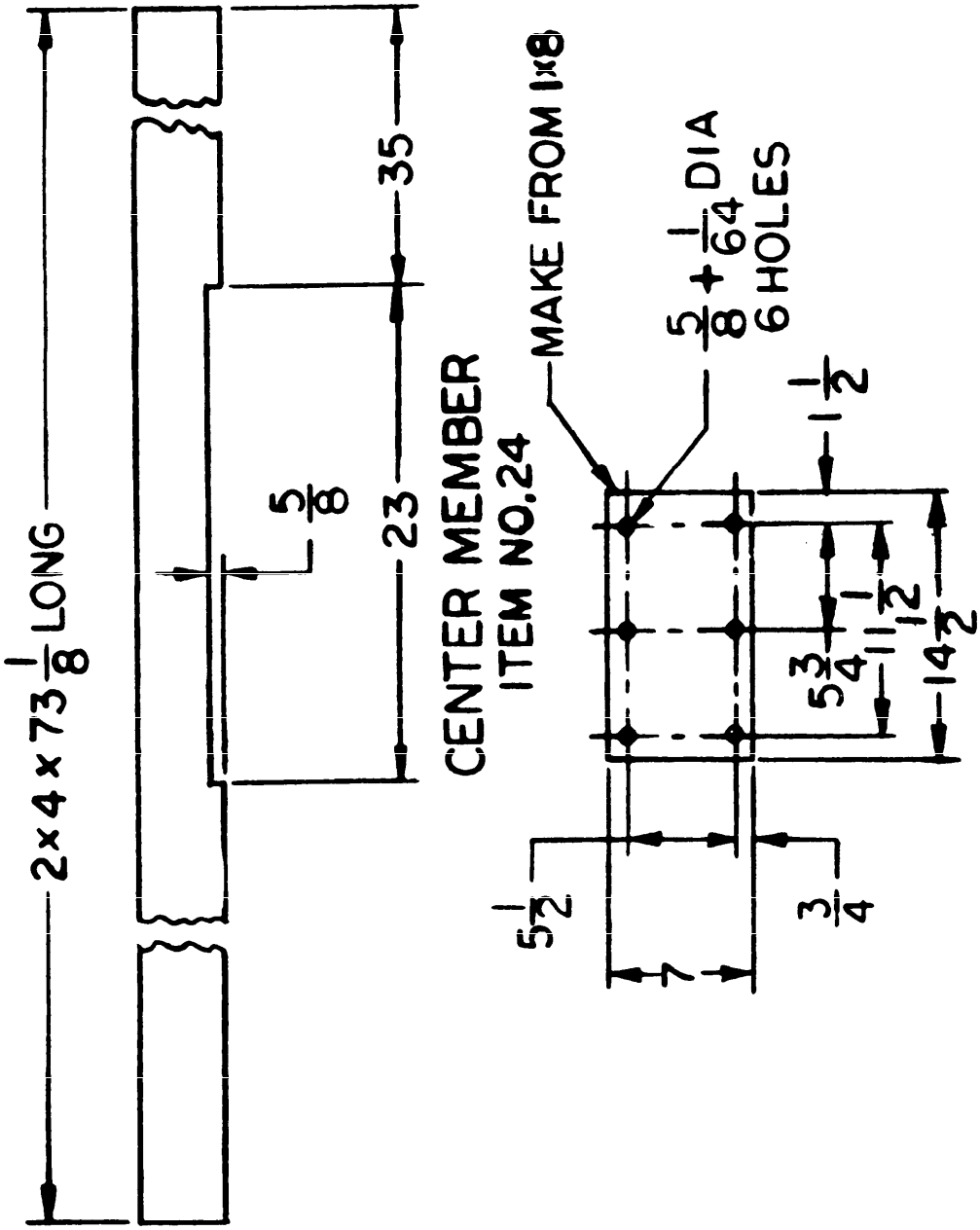

FIGURE C15

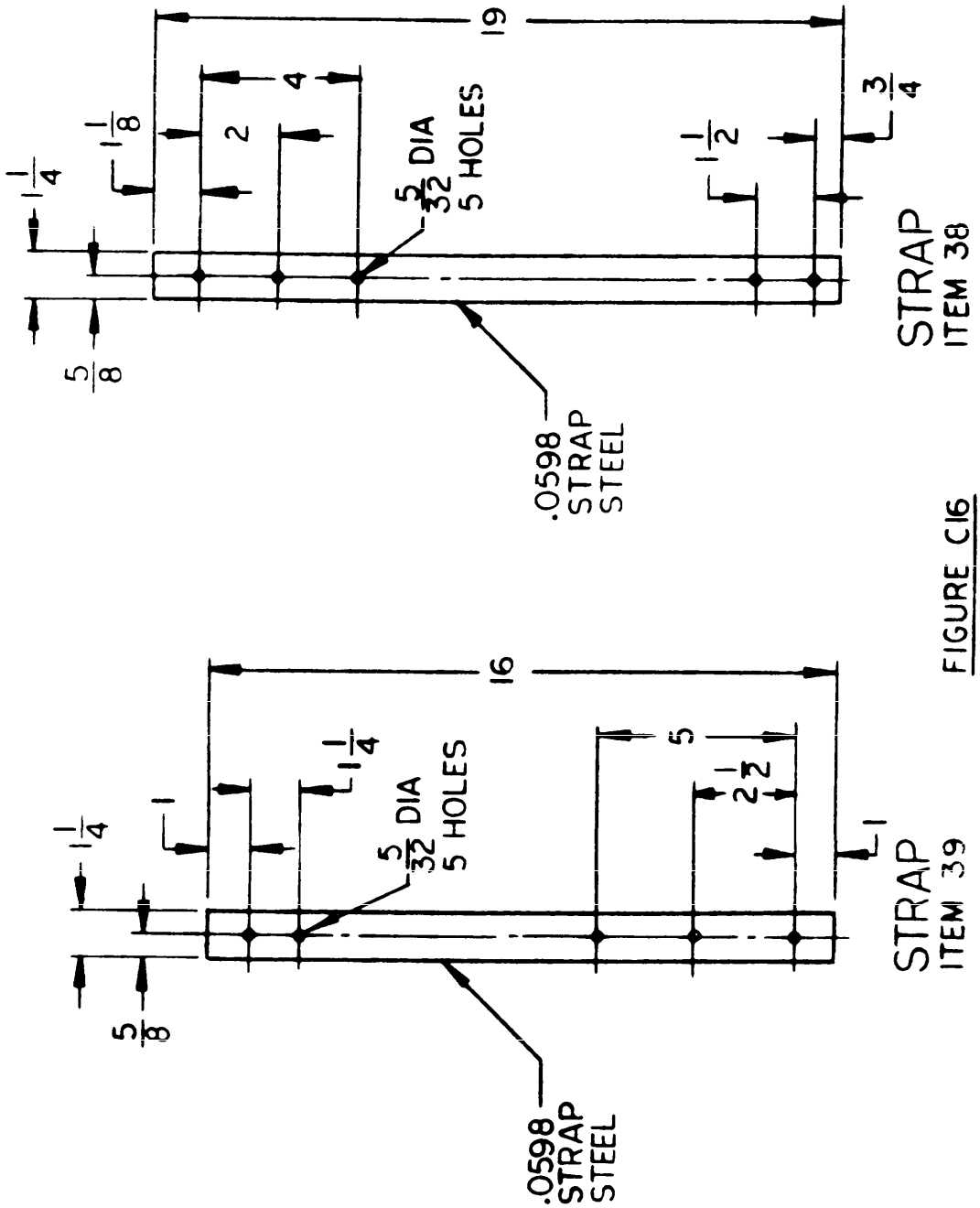

FIGURE C16

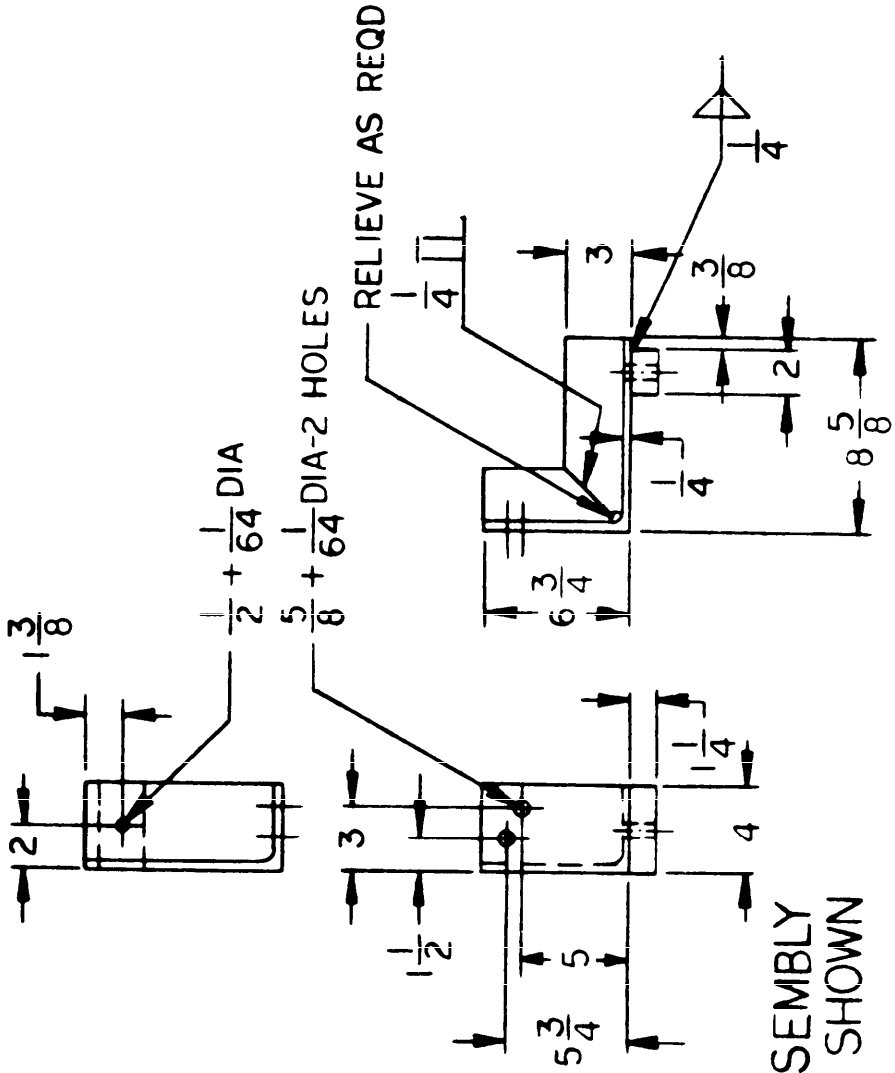

BRACKET ASSEMBLY
LEFT HAND SHOWN
ITEM-3
RIGHT HAND
ITEM-20

FIGURE C17

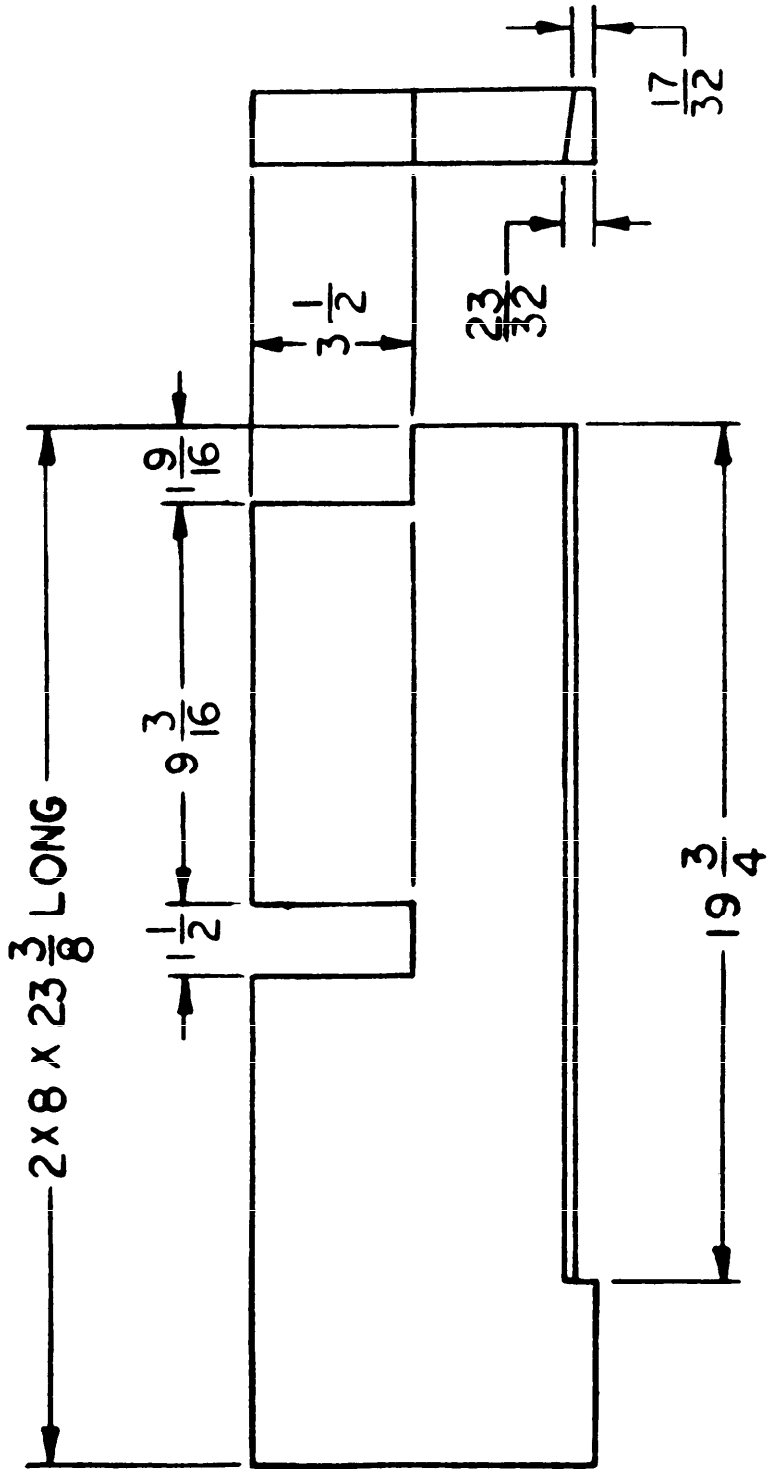

REAR BRACE-RIGHT SIDE
ITEM 43
FIGURE C18

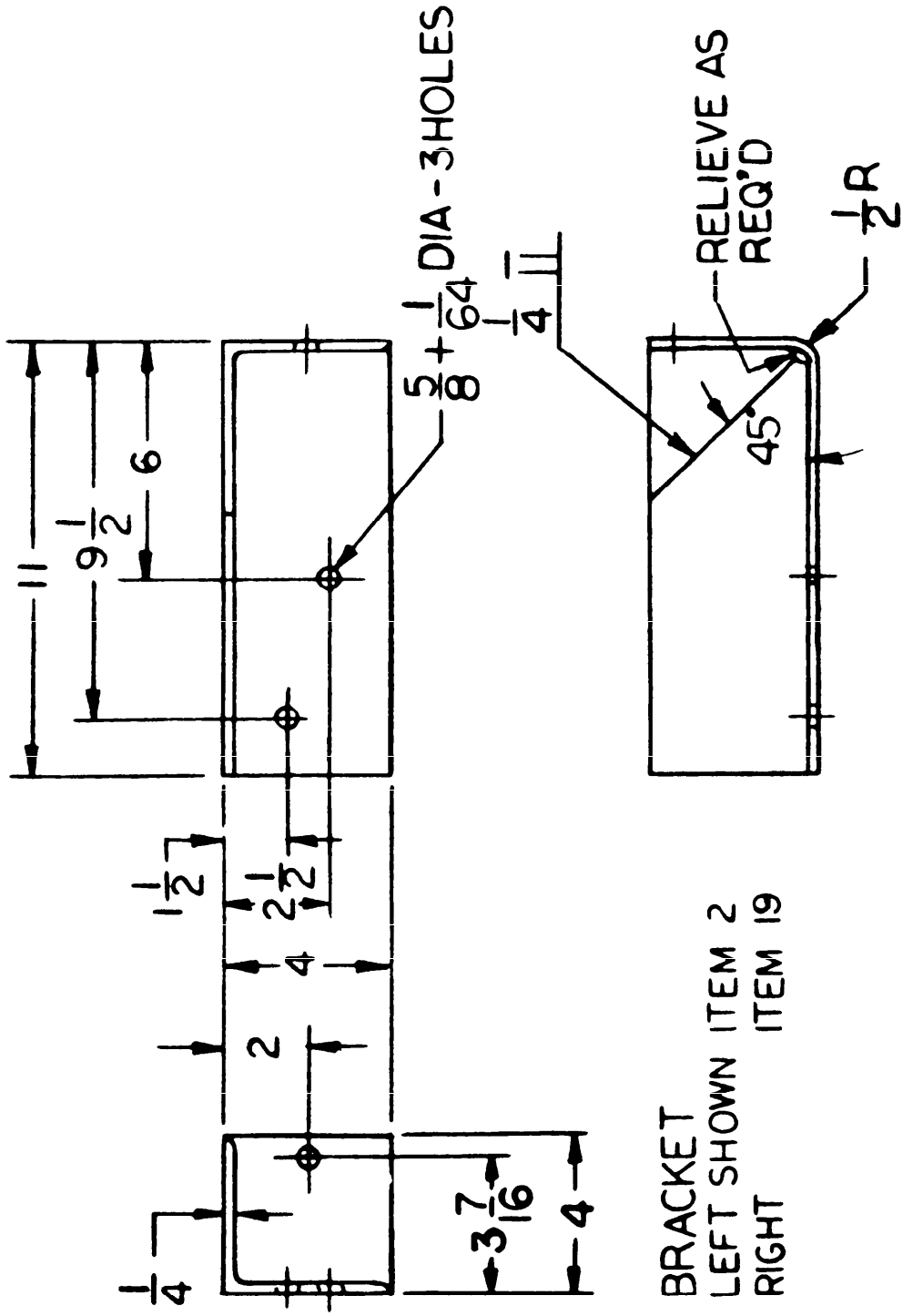

FIGURE C19

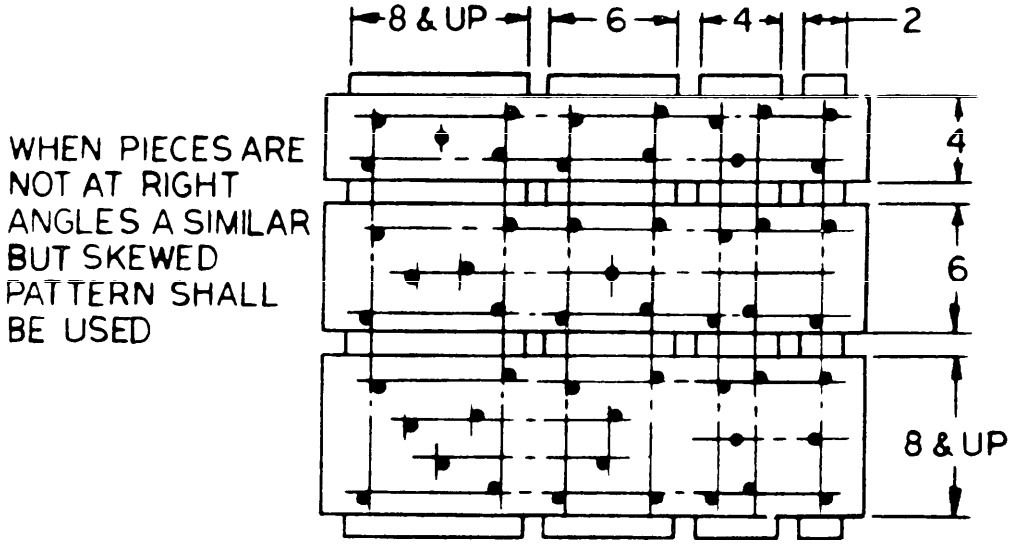

NAILING PATTERNS
(NOMINAL WOOD SIZES)

NAILING SPECIFICATIONS			
NOMINAL WOOD THICKNESS		NAIL SIZE	
NAILING	TO	CLINCHED	HIDDEN
1	1	5d	4dCC
1	2	8d	7dCC
1	4	———	8dCC
1	6	———	8dCC
1	8	———	8dCC
2	2	16d	12dCC
2	4	50d	20dCC
2	6	———	20dCC
2	8	———	20dCC
4 & UP	4 & UP	BOLTED CONSTRUCTION	
FOR GROUP I WOODS, INCREASE NAIL SIZE TO NEXT LARGER SIZE & REDUCE NAIL SPACING BY 1/4 INCH			
FOR GROUP IV WOODS DECREASE NAIL SIZE TO NEXT SMALLER SIZE & NAIL SPACING MAY BE INCREASED BY 1/4 INCH. DRILL LEAD HOLES WHERE NECESSARY TO PREVENT SPLITTING			

FIGURE C20

GUN TUBE SHIPPING FIGURE D1	
FIG. NO.	DESCRIPTION
D2	INSTALLATION, SHIPPING 105 MM GUN TUBE
D3	SUPPORT ASSEMBLY, FRONT
D4	BRACE, FRONT
D5	ANGLE, FRONT
D6	BLOCK, FRONT (LOWER)
D7	WASHER, FRONT
D8	WASHER, REAR
D9	SUPPORT ASSEMBLY, REAR
D10	BRACE, LEFT REAR
D11	BRACE, RIGHT REAR
D12	ANGLE, REAR
D13	BLOCK, REAR (LOWER)
D14	WIRE
D15	INSTALLATION, GUN TUBE OPENING COVER IN CLOSURE COVER
D16	COVER
D17	PLATE
D18	WASHER (8 REQD. MIN.) (SHOWN ON FIG. D2 SH. 3 & 4)
D19	CLIP (SHOWN ON FIG. D2 SH. 5)
D20	SCREW (SHOWN ON FIG. D2 SH. 3 & 4)
D21	BOLT (SHOWN ON FIG. D2 SH. 3)
D22	BOLT (SHOWN ON FIG. D2 SH. 4)
D23	LOCKWASHER (SHOWN ON FIG. D2 SH. 3 & 4)
D24	NUT (SHOWN ON FIG. D3 & D9)
D25	LOCKWASHER (SHOWN ON FIG. D2 SH. 3 & 4)
D26	WIRE, CABLE (SHOWN ON FIG. D2 SH. 5)
D27	WIRE (SHOWN ON FIG. D2 SH. 2)
D28	DISC
D29	BLOCK, FRONT (UPPER) (SHOWN ON FIG. D6)
D30	BLOCK, REAR (UPPER) (SHOWN ON FIG. D13)

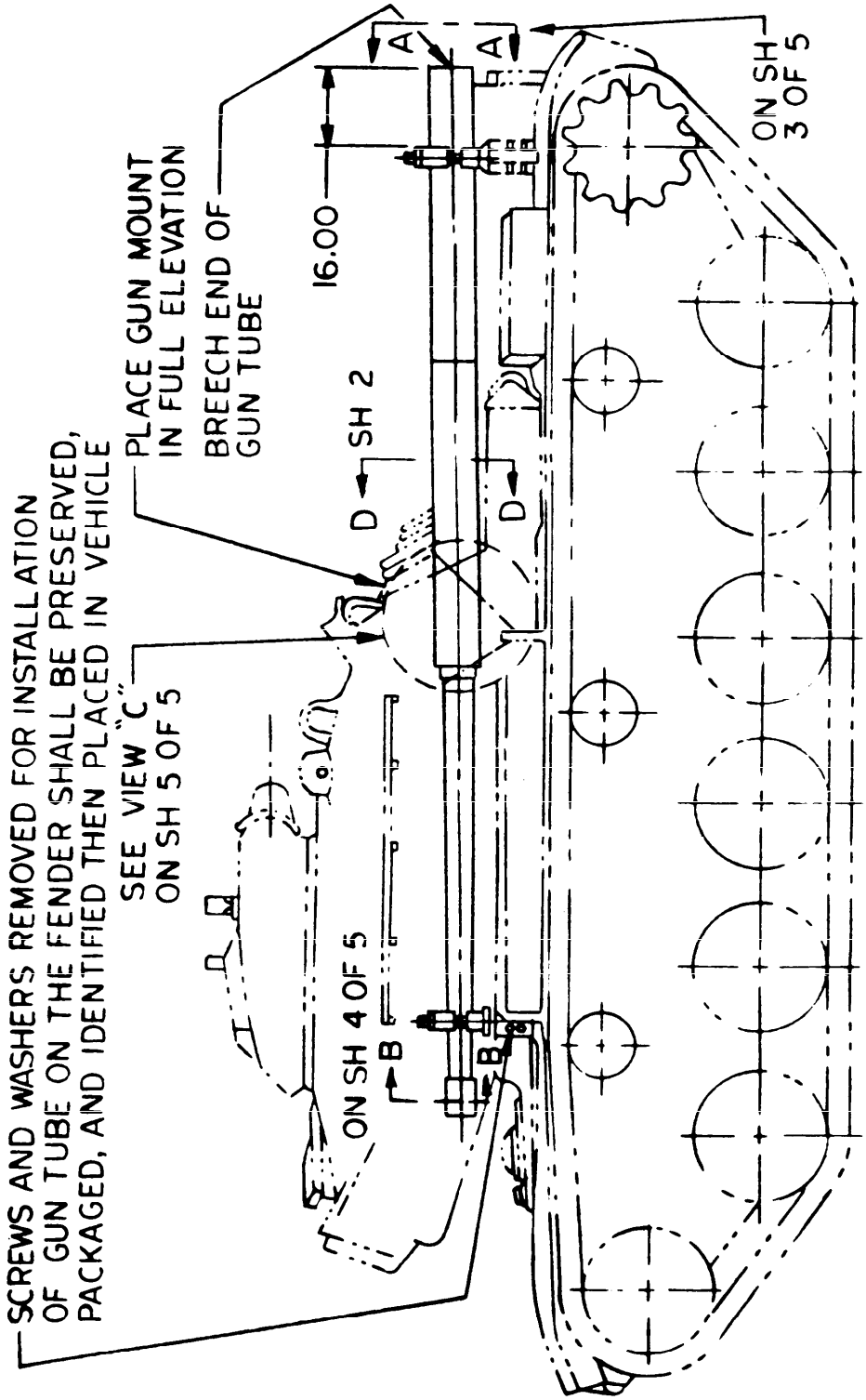

INSTALLATION, SHIPPING
105 MM GUN TUBE
FIGURE D2 SH 1 OF 5

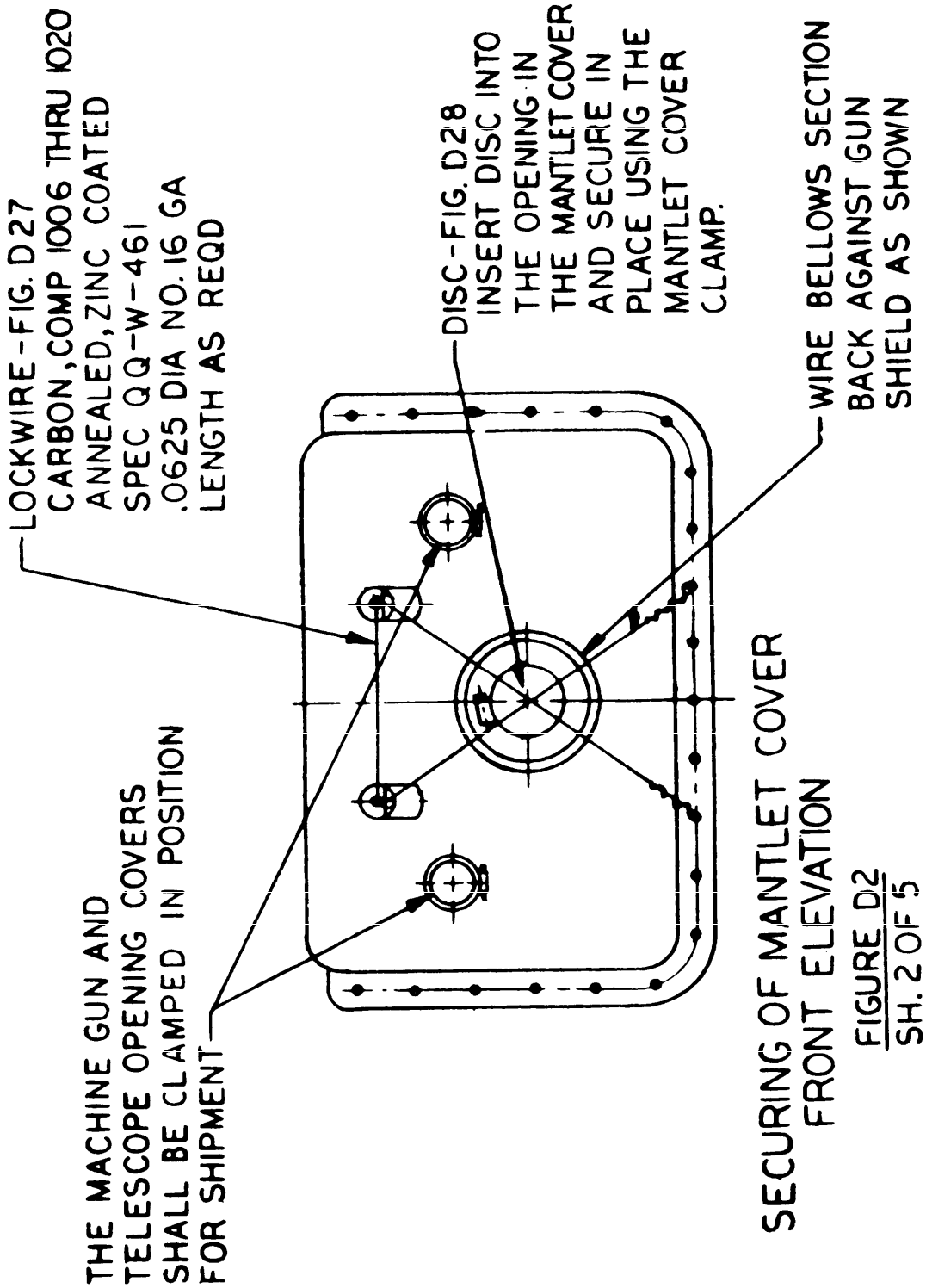

SECURING OF MANTLET COVER
FRONT ELEVATION

FIGURE D2
SH. 2 OF 5

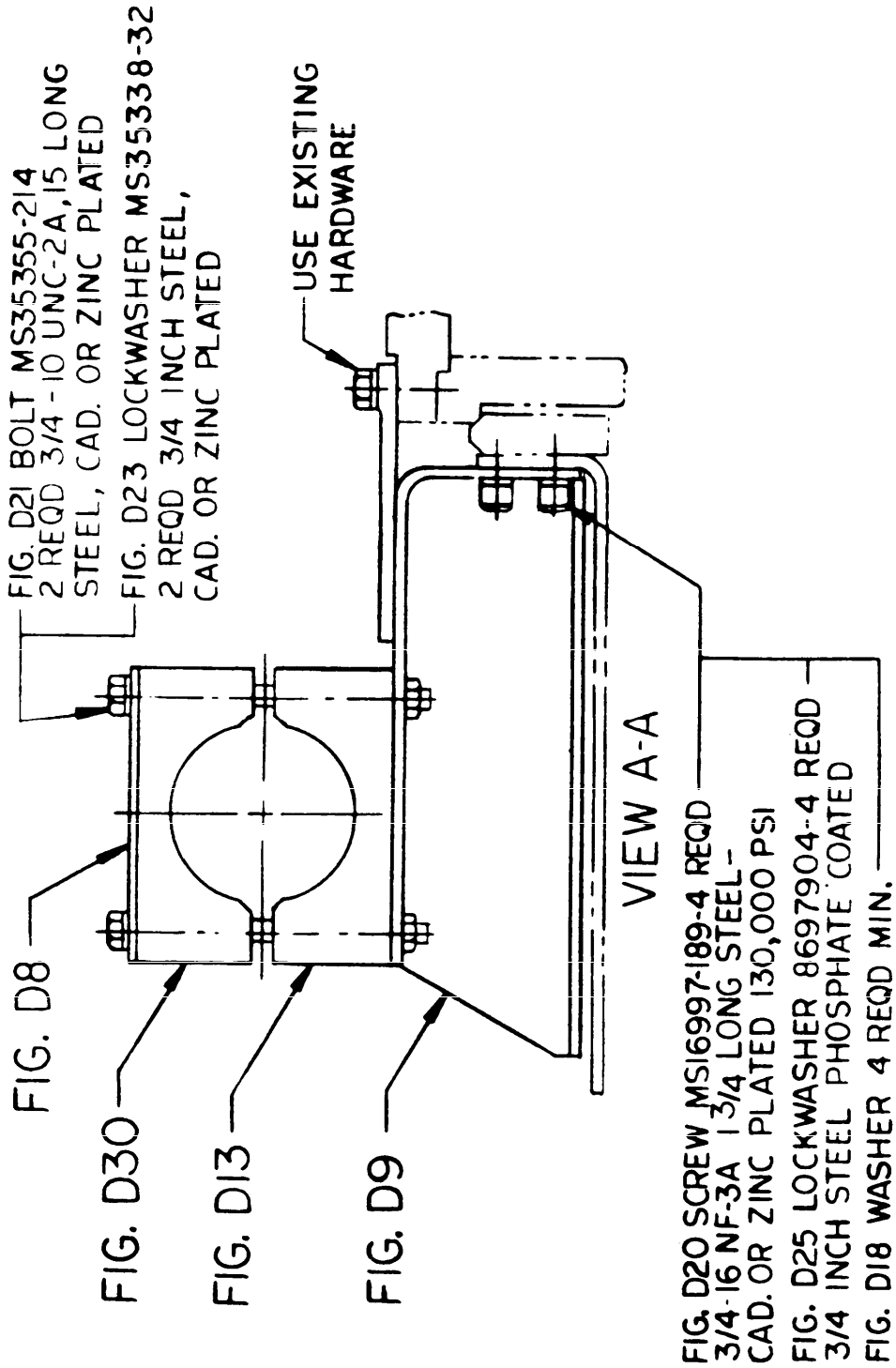

FIGURE D2
SH 3 OF 5

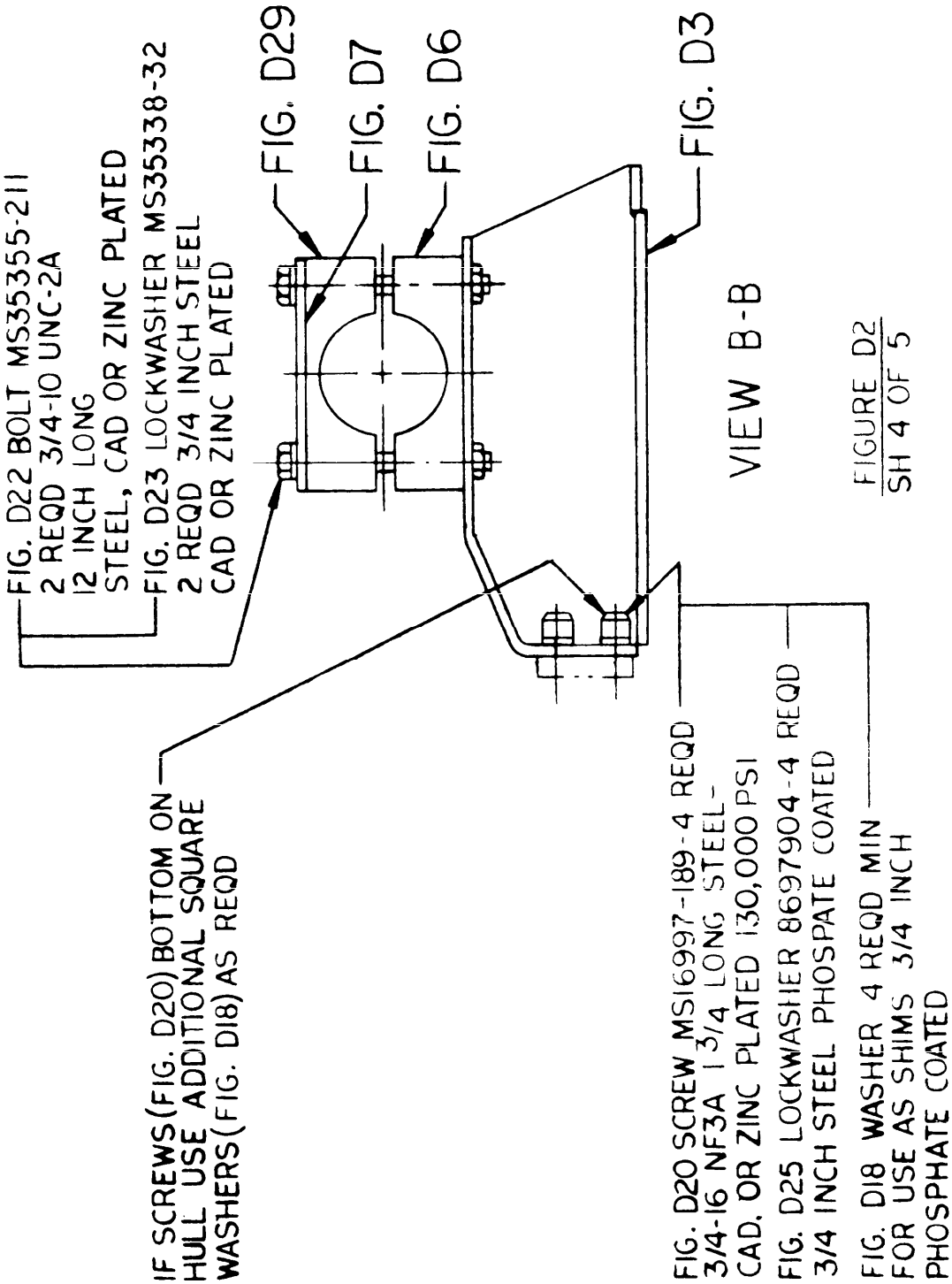

FIGURE D2
SH 4 OF 5

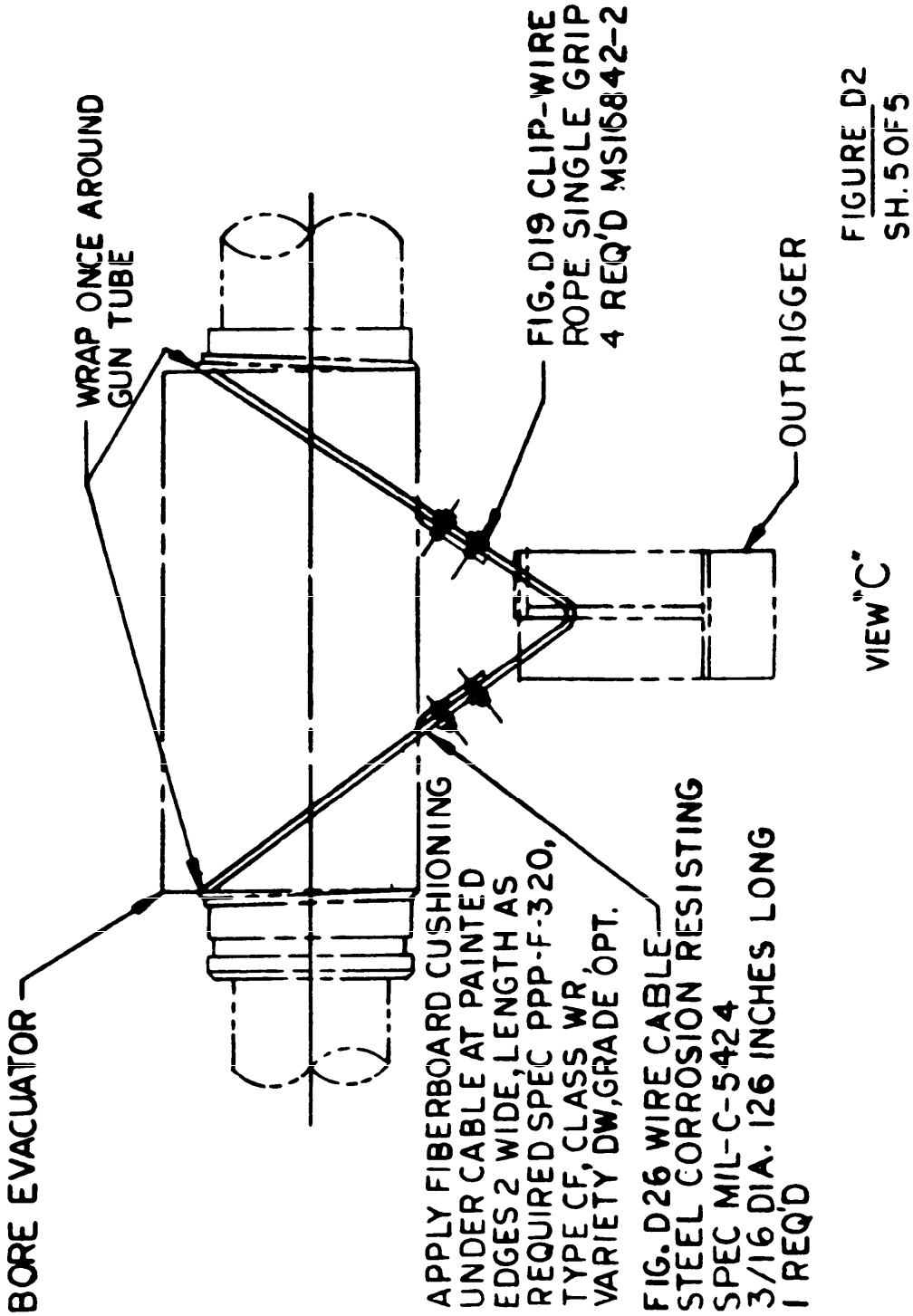

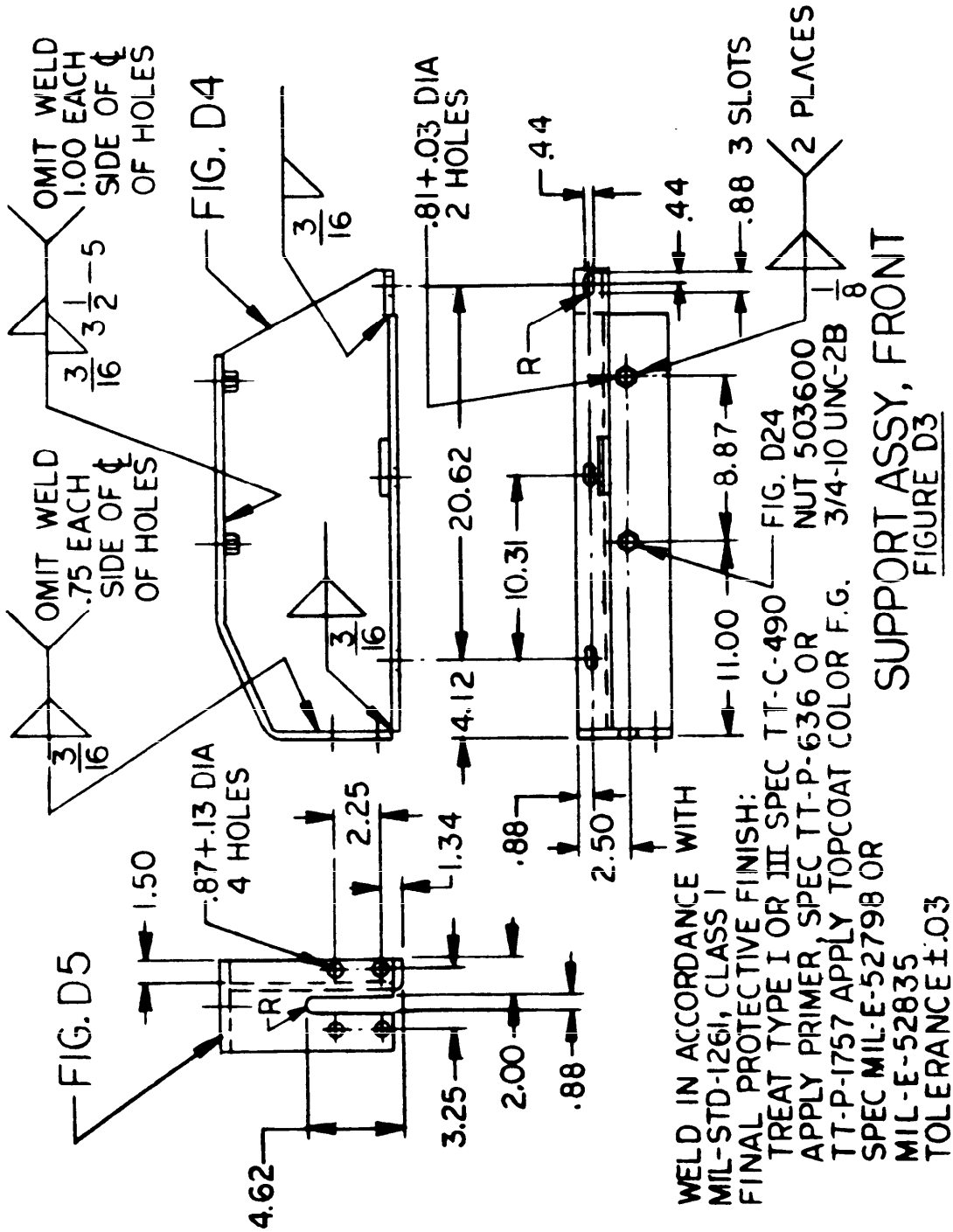

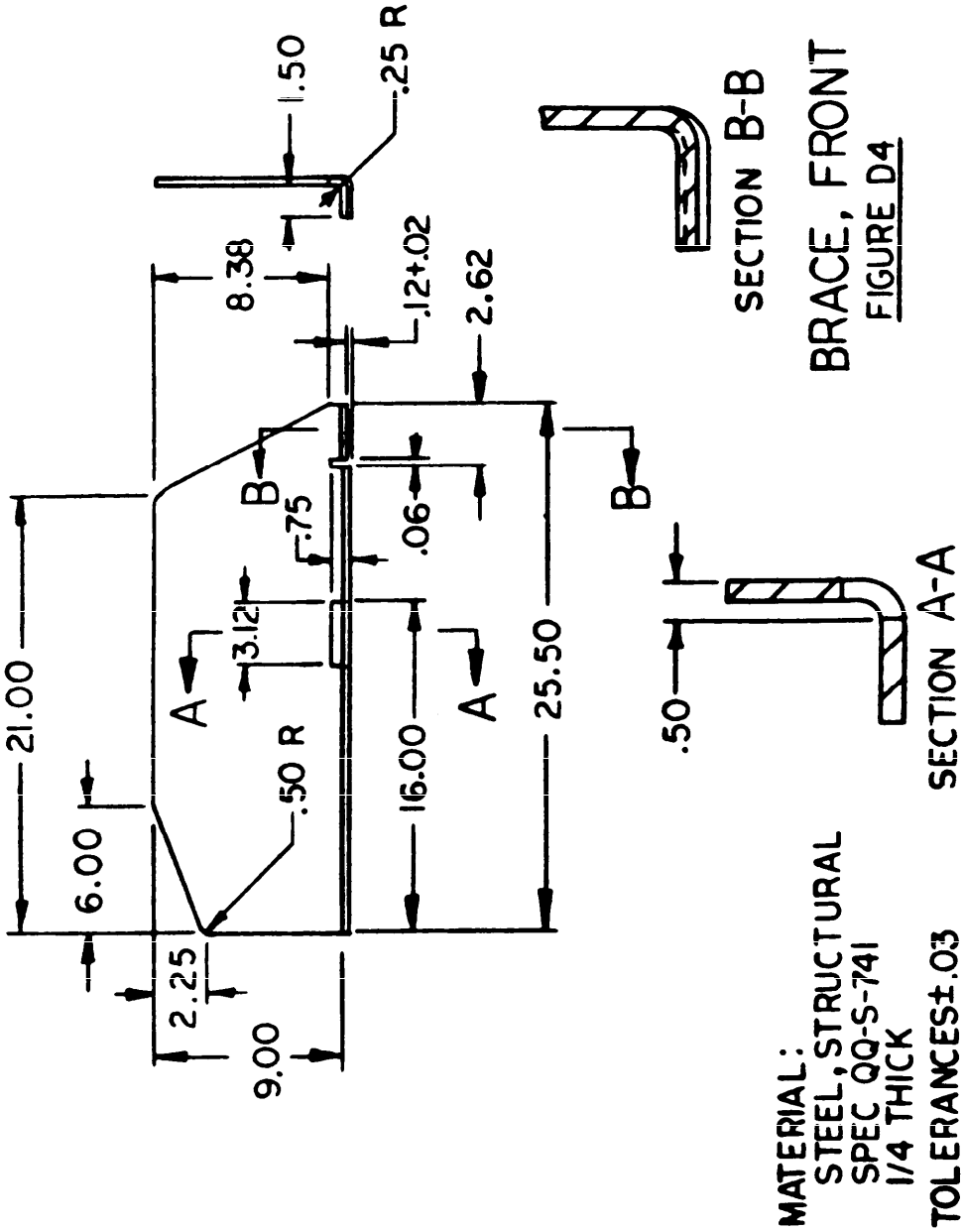

BRACE, FRONT
FIGURE D4

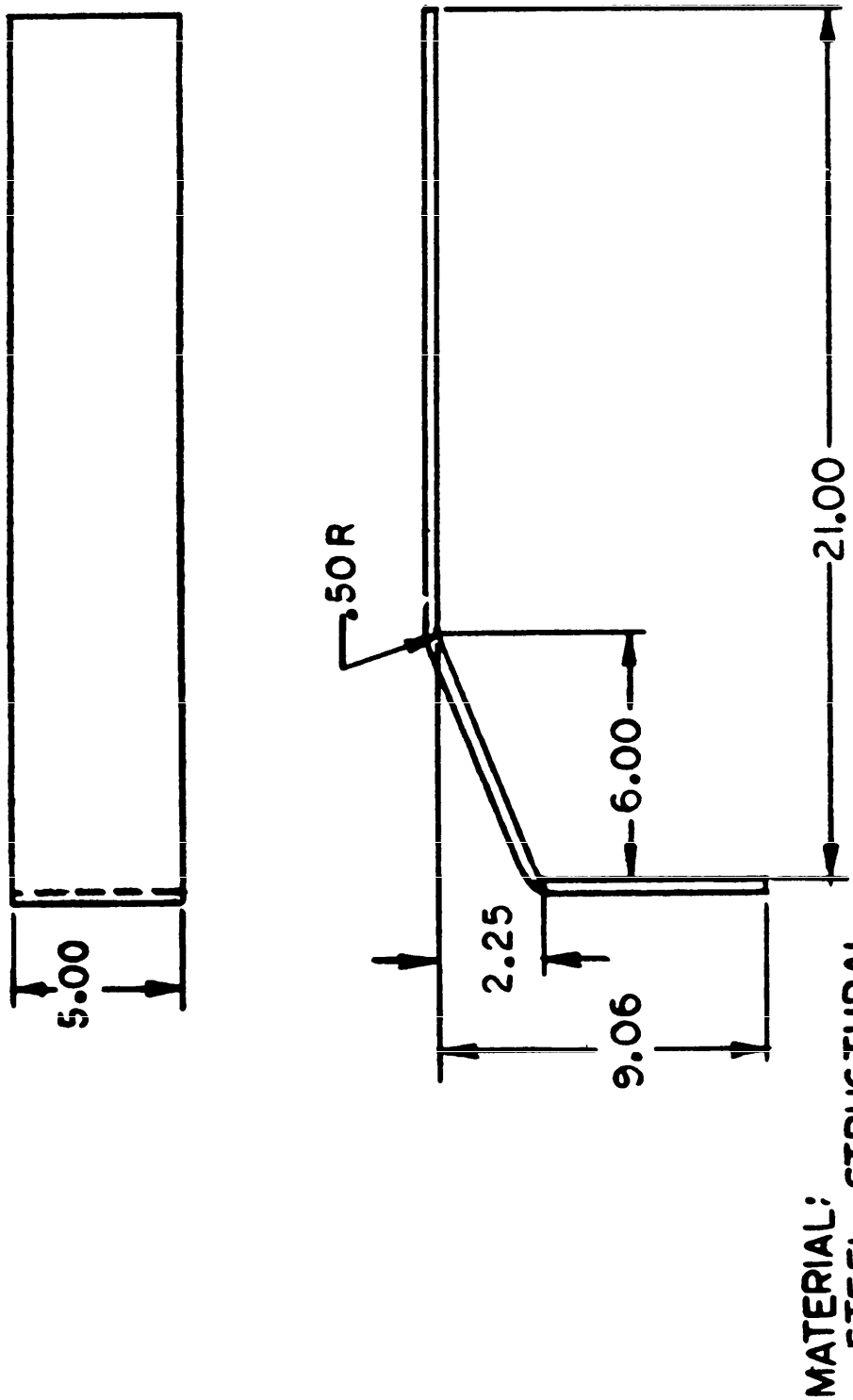

ANGLE, FRONT
FIGURE D5

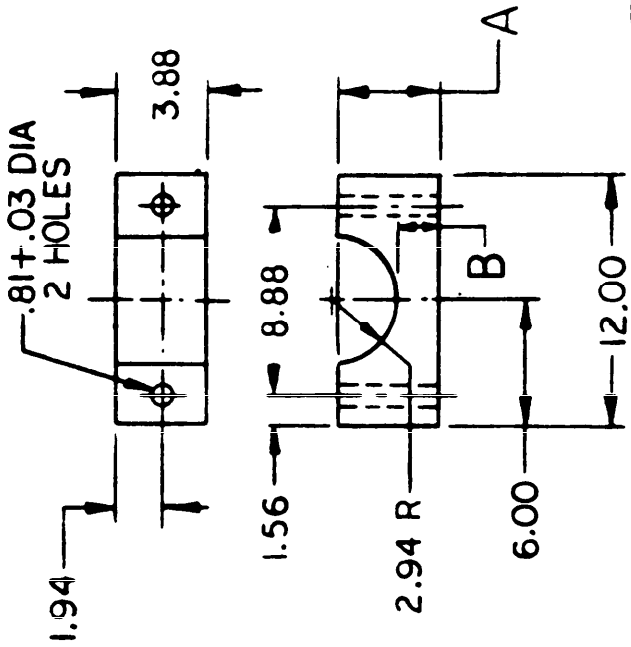

BLOCK	A	B
FIG. D6 FRONT LOWER	5.83	2.69
FIG. D29 FRONT UPPER	3.75	1.06

BLOCK, FRONT
FIGURES D6 & D29

MATERIAL:
WOOD, CLASS A
SPEC MIL-W-3912
FINAL PROTECTIVE FINISH:

APPLY PRIMER
SPEC TT-P-636 OR TT-P-1757
APPLY TOPCOAT COLOR F.G.
SPEC MIL-E-52798 OR MIL-E-52835
TOLERANCE ±.03

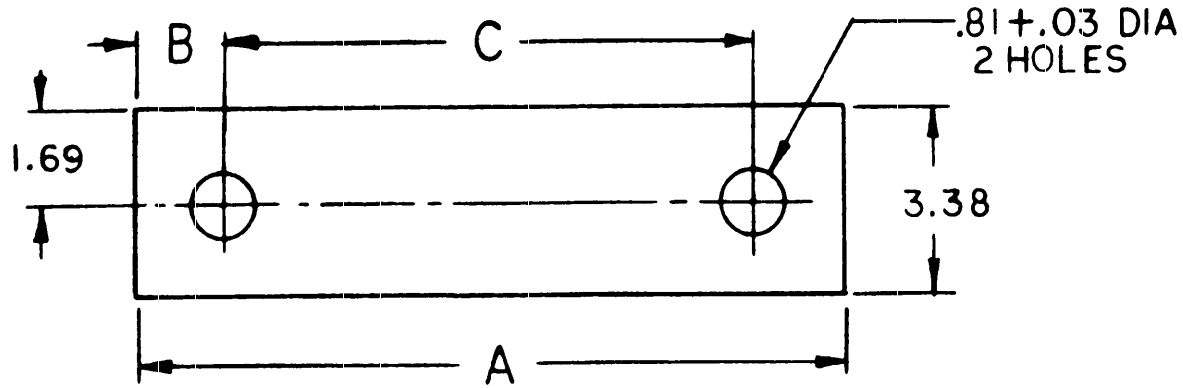

FIGURE NO.	A	B	C
FIG. D7 FRONT	12.00	1.56	8.88
FIG. D8 REAR	15.00	1.50	12.00

MATERIAL:
STEEL, COMMERCIAL QUALITY
SPEC QQ-S-698
.164 (NO. 11 MS GA) THICK
FINAL PROTECTIVE FINISH:
TREAT, TYPE I OR TYPE III, SPEC TT-C-490
APPLY PRIMER, SPEC TT-P-636 OR
TT-P-1757 APPLY TOPCOAT COLOR F.G.
SPEC MIL-E-52798 OR MIL-E-52835

TOLERANCES ±.03

WASHER
FIGURES D7 & D8

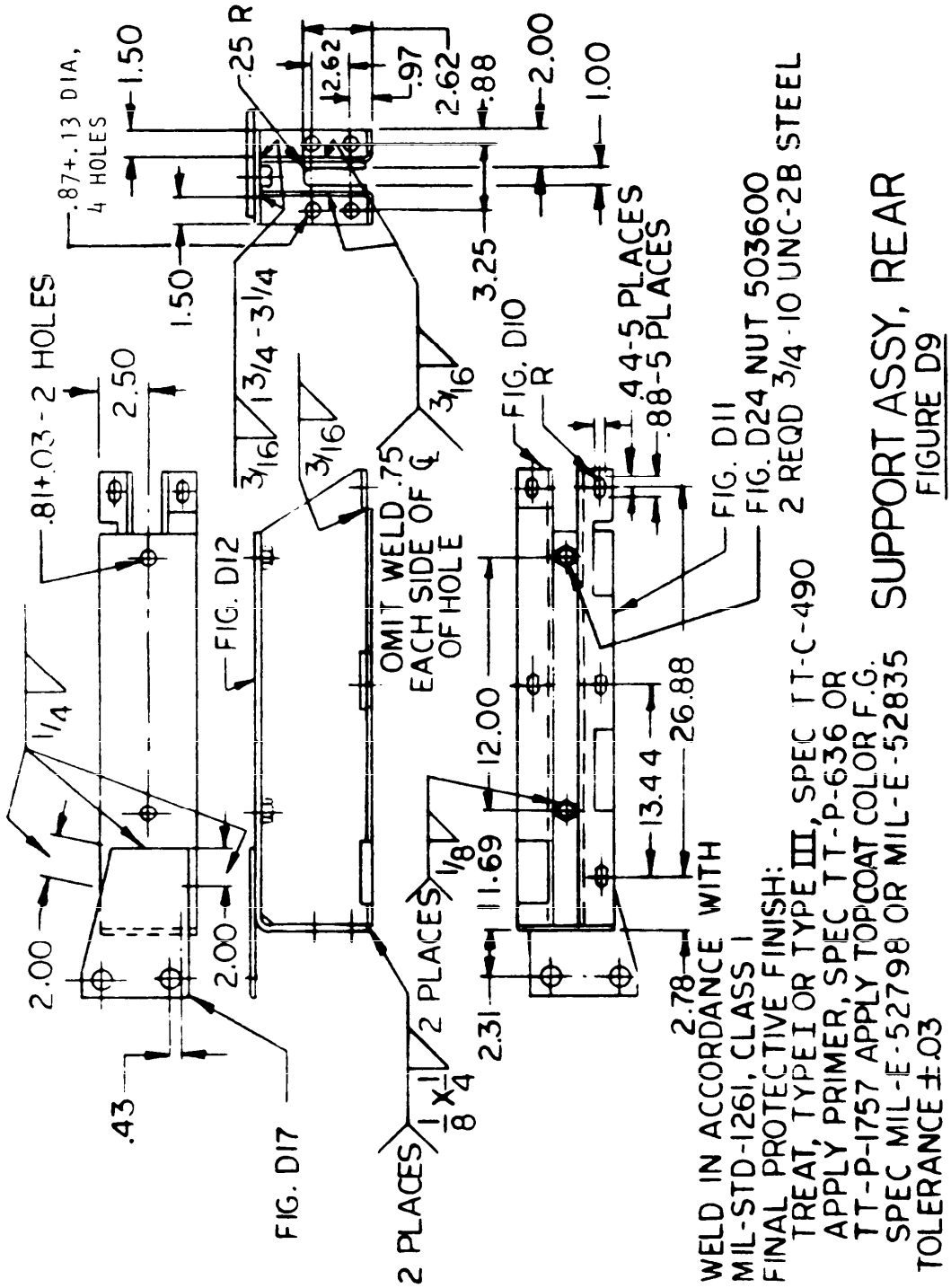

SUPPORT ASSY, REAR
FIGURE D9

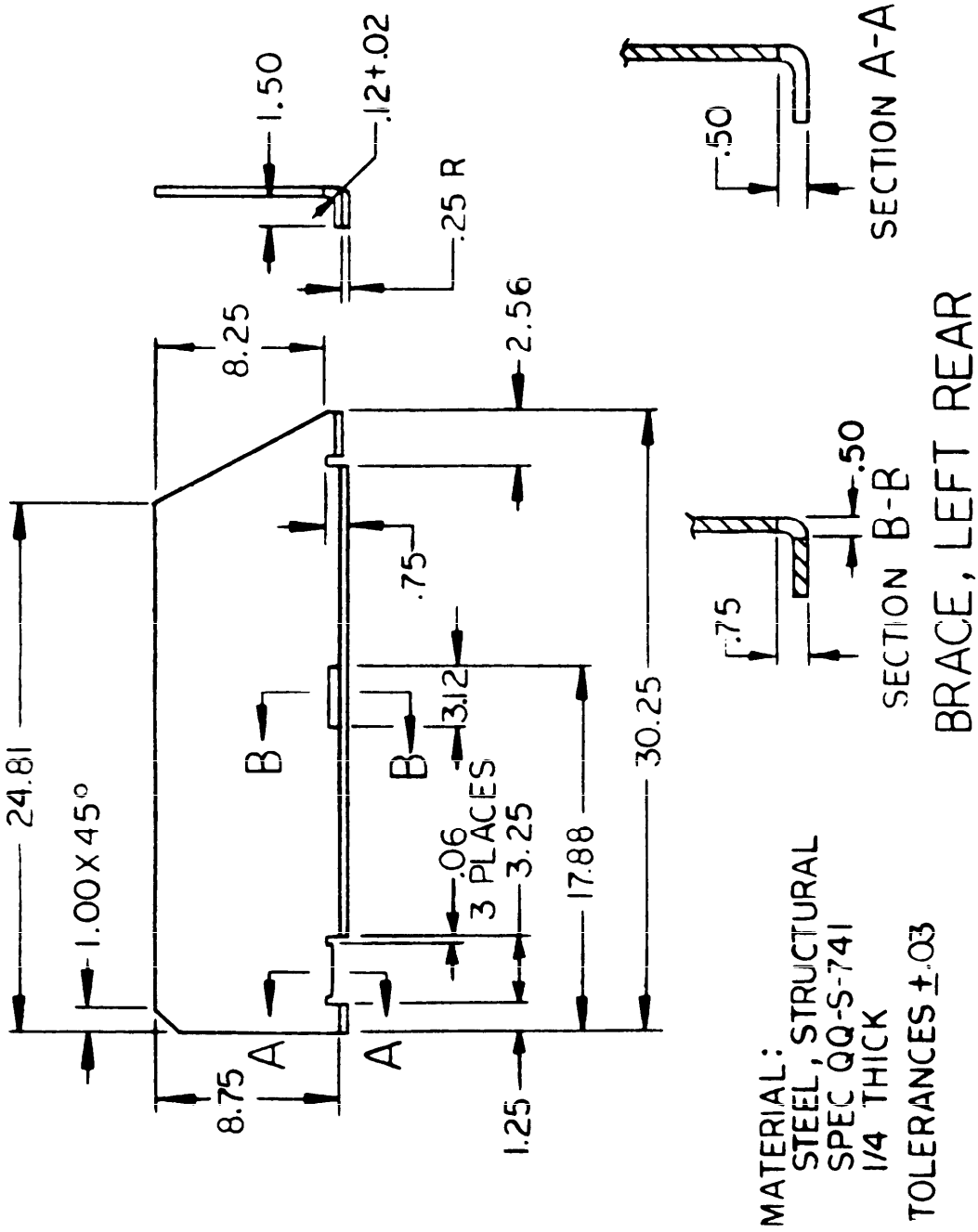

BRACE, LEFT REAR
FIGURE D10

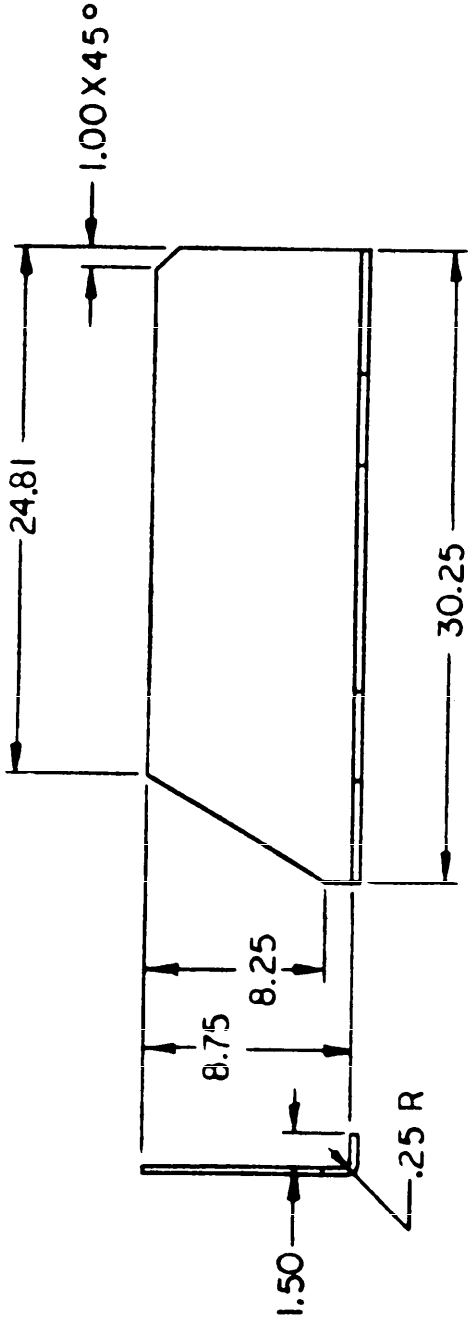

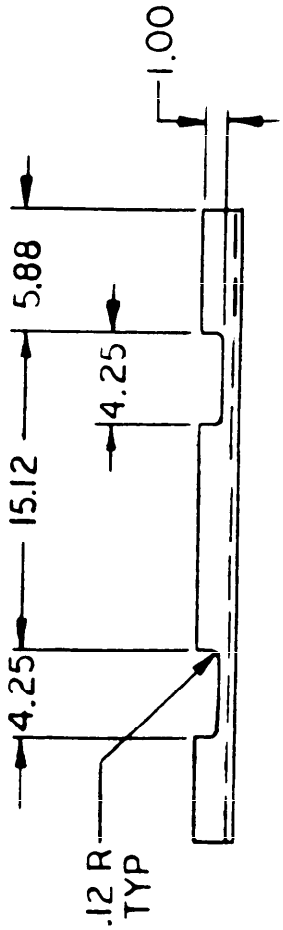

BRACE, RIGHT REAR
FIGURE DII

MATERIAL:
STEEL, STRUCTURAL
SPEC QQ-S-741
1/4 THICK
TOLERANCES ±.03

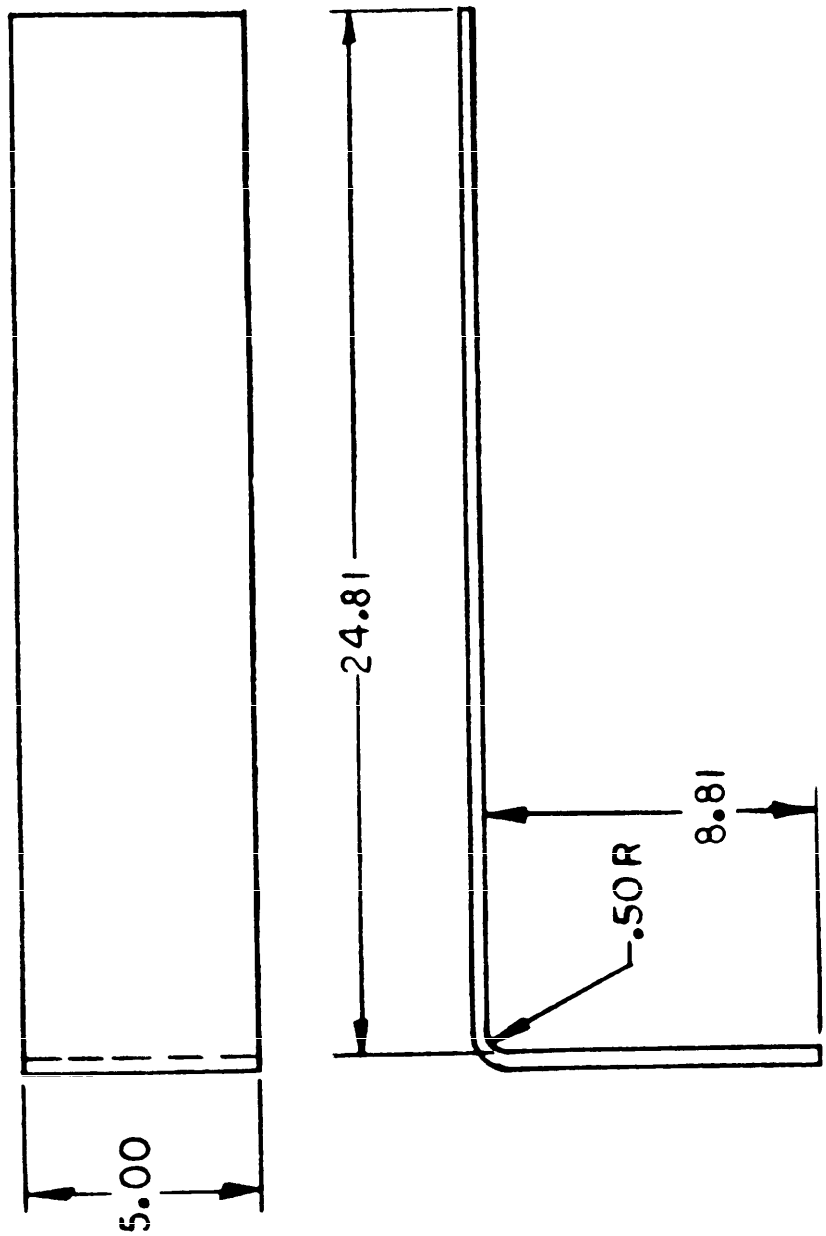

ANGLE, REAR
FIGURE D12

MATERIAL:
STEEL, STRUCTURAL
SPEC QQ-S-741
5/16 THICK
TOLERANCE ±.03

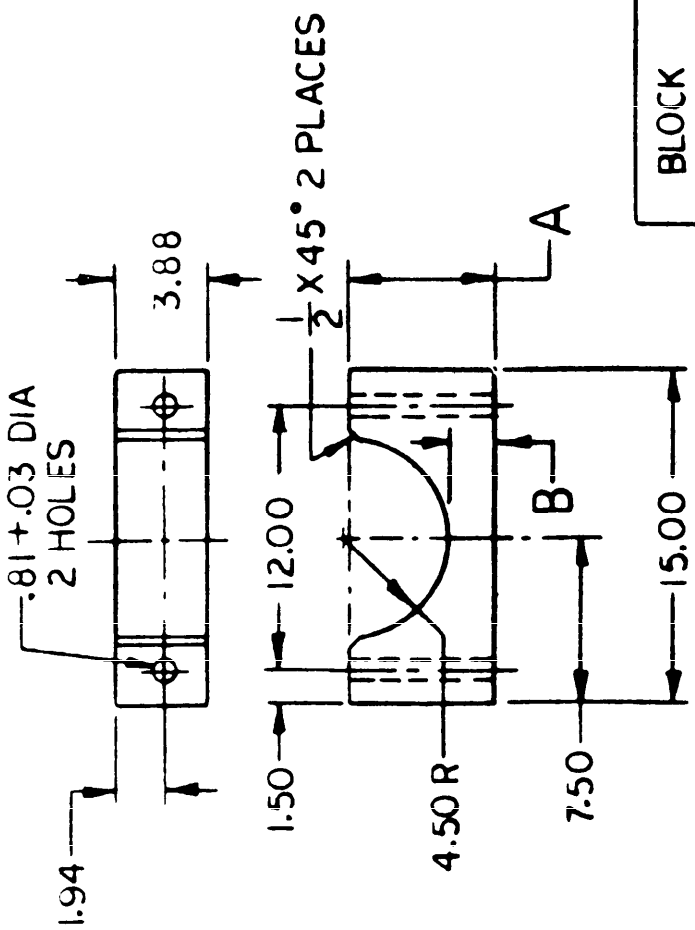

BLOCK	A	B
FIG. D13 REAR LOWER	6.94	2.69
FIG. D30 REAR UPPER	5.31	1.06

BLOCK, REAR
FIGURES D13 & D30

MATERIAL:
WOOD, CLASS A
SPEC MIL-W-3912
FINAL PROTECTIVE FINISH:

APPLY PRIMER
SPEC TT-P-636 OR TT-P-1757
APPLY TOPCOAT COLOR F.G.
SPEC MIL-E-52798 OR MIL-E-52835

TOLERANCE ±.03

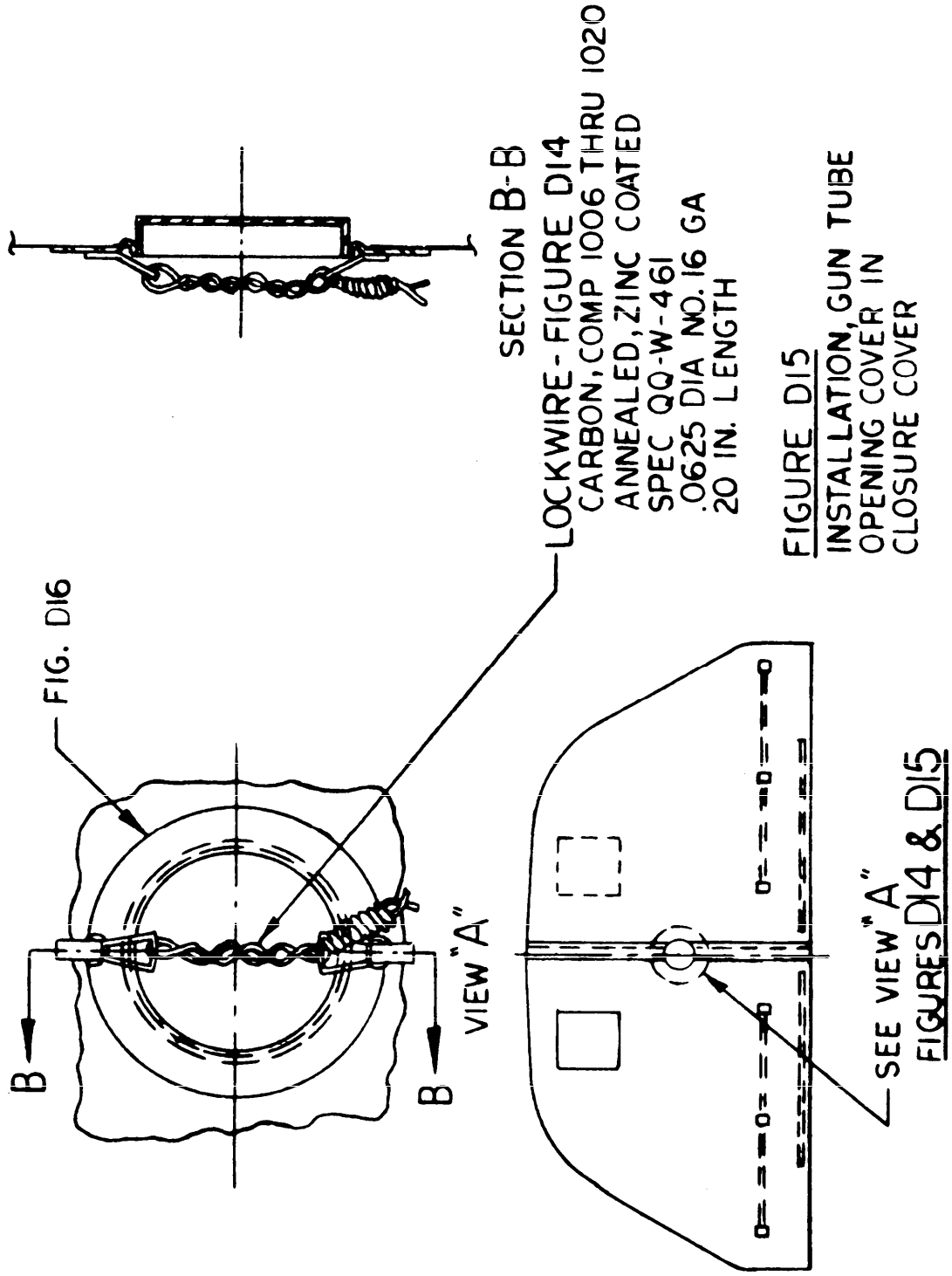

FIGURE D15
INSTALLATION, GUN TUBE
OPENING COVER IN
CLOSURE COVER

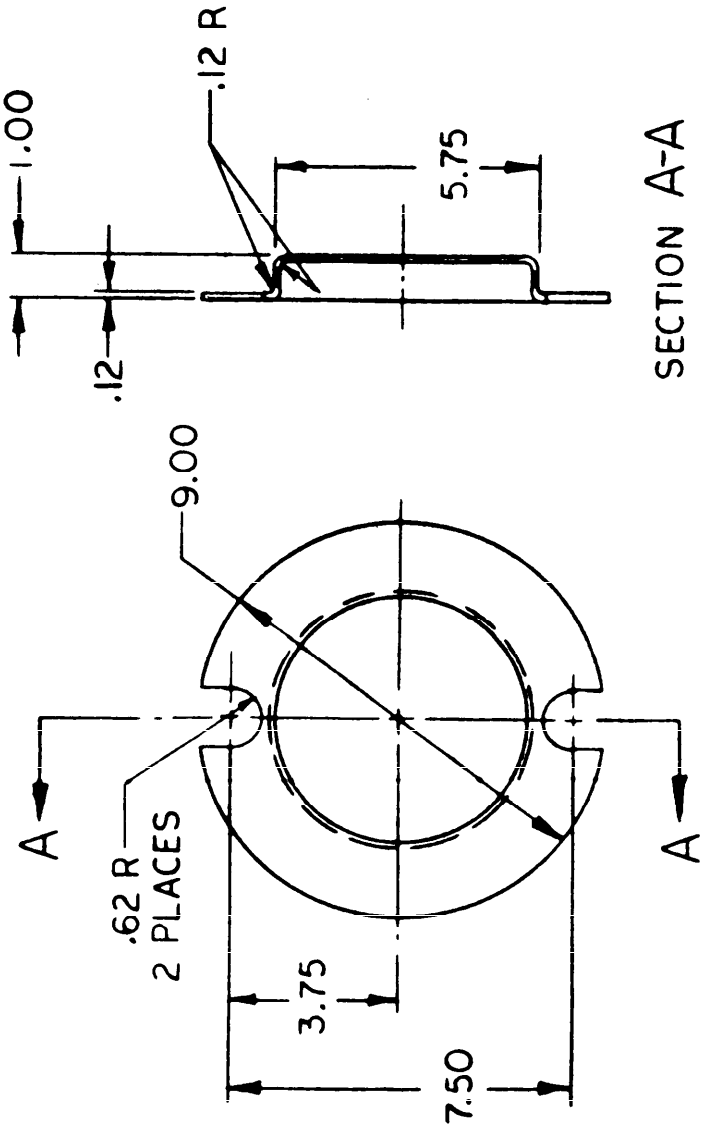

COVER
FIGURE D16

MATERIAL:
COVER, NYLON
TYPE I, SPEC MIL-M-20693
COLOR F.G.
TOLERANCES ± .06

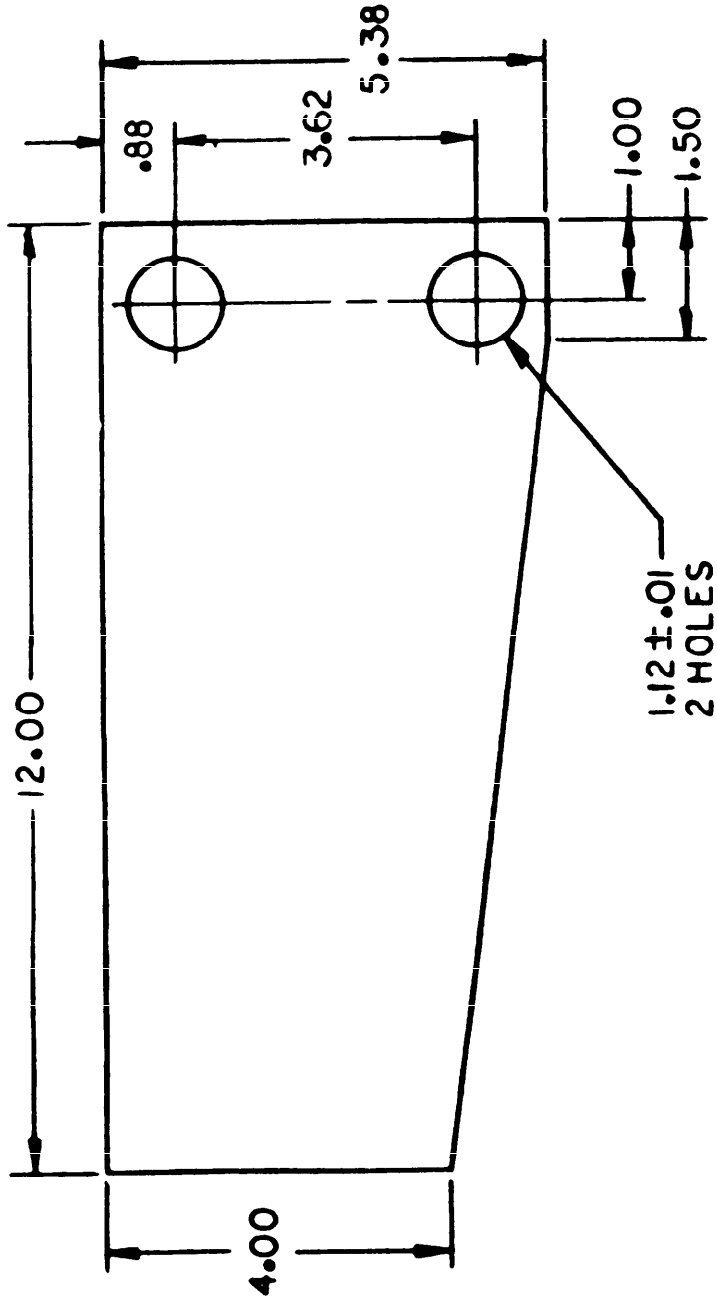

PLATE
FIGURE D17

MATERIAL:
STEEL, STRUCTURAL
SPEC QQ-S-741
5/16 THICK

TOLERANCE ± .03

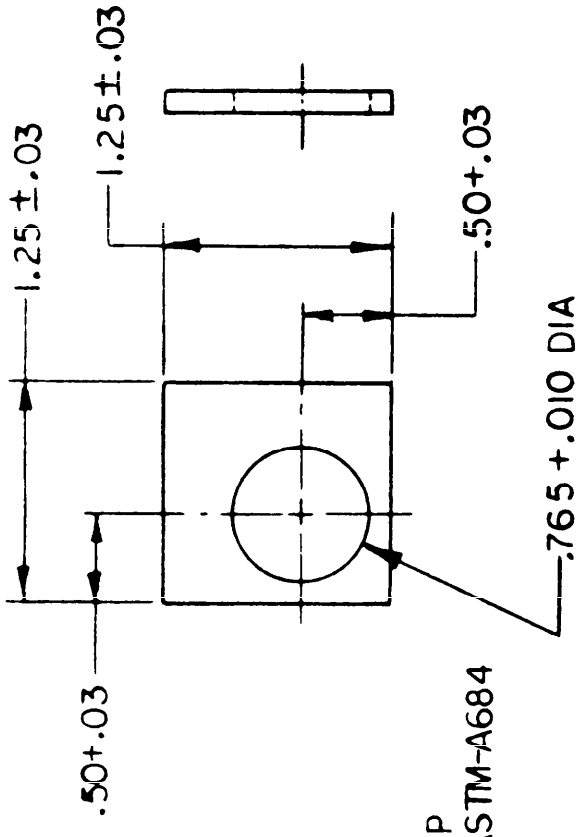

MATERIAL:
STEEL, CARBON, STRIP
COMP 1065 TO 1095, ASTM-A684
.125 THICK
HEAT TREATMENT:
QUENCH & TEMPER
HARDNESS 42/47
ROCKWELL C
FINAL PROTECTIVE FINISH:
TREAT, TYPE I OR TYPE III, SPEC TT-C-490
APPLY PRIMER, SPEC TT-P-636 OR
TT-P-1757 APPLY TOPCOAT COLOR F.G.
SPEC MIL-E-52798 OR MIL-E-52835

WASHER
FIGURE D18

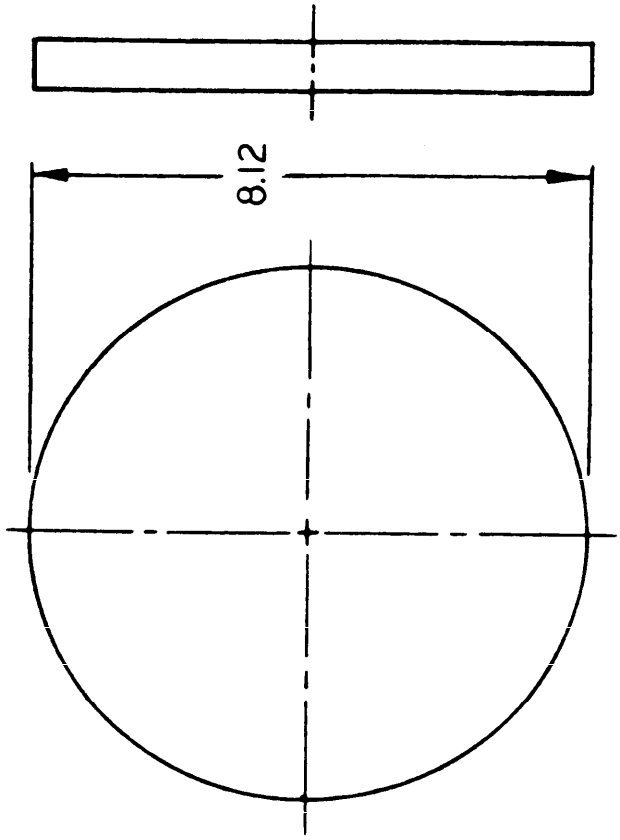

FIGURES D19 THRU D27 ARE LISTED ON FIGURE D1

MATERIAL:
PLYWOOD, TYPE EXTERIOR
SPEC NN-P-530
3/4 THICK

FINISH:
APPLY PRIMER, SPEC TT-P-630 OR TT-P-1757 APPLY TOPCOAT COLOR F.G. SPEC MIL-E-52798 OR MIL-E-52835

DISC
FIGURE D28

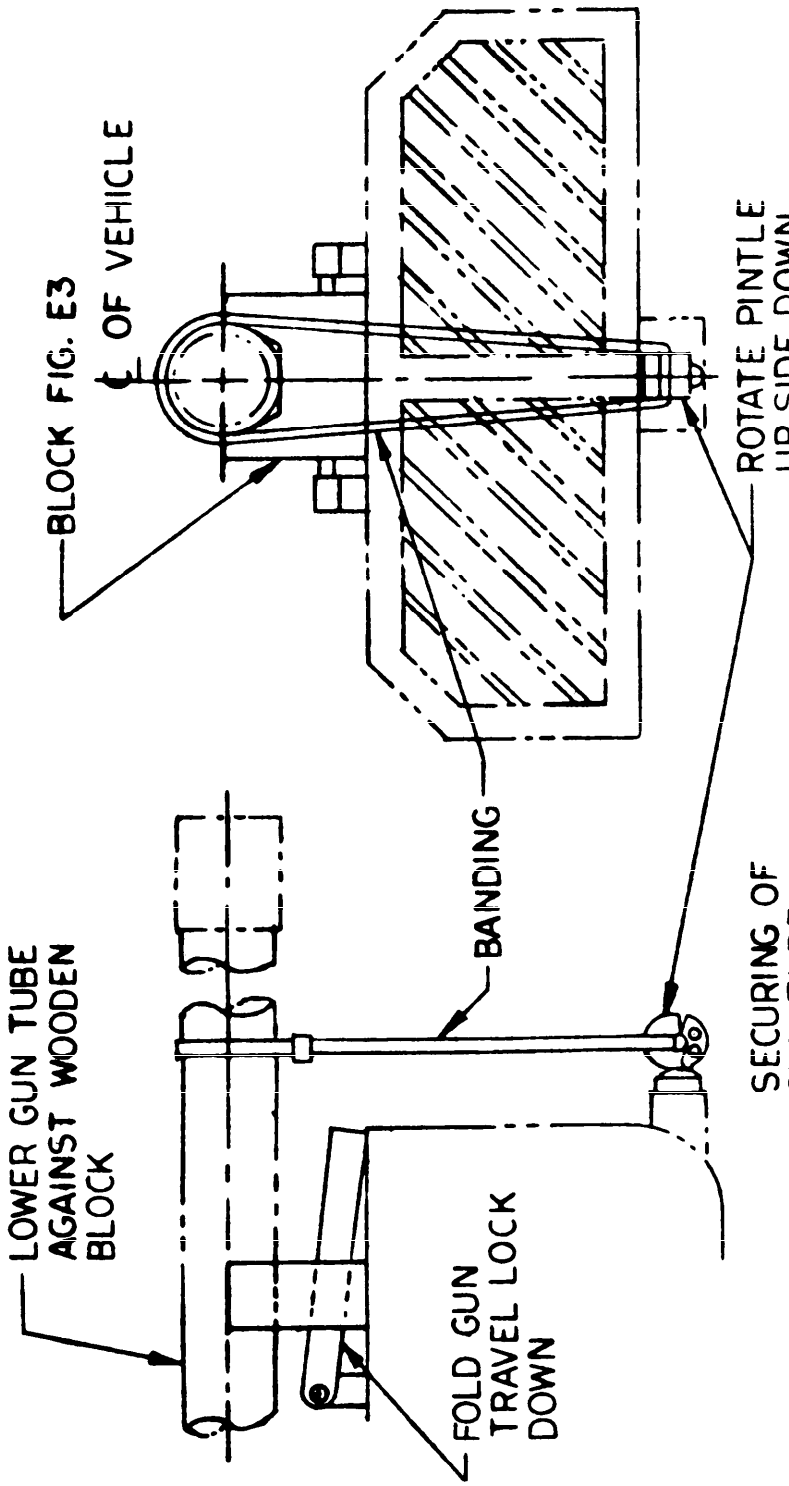

SHIPMENT OF TWO VEHICLES ON ONE FLAT CAR

FIGURE E1

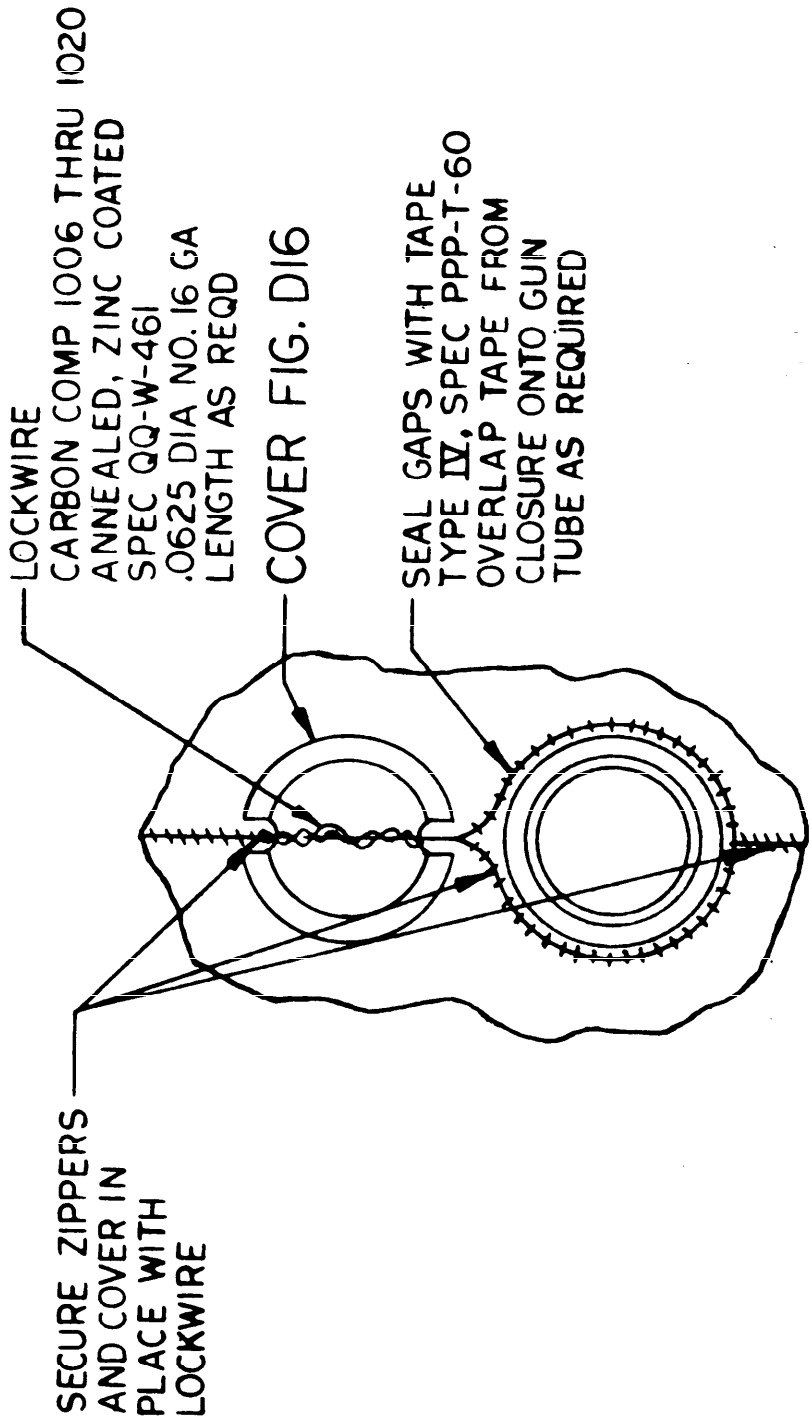

SEALING OF CLOSURE COVER
SHIPMENT OF TWO VEHICLES
ON ONE FLAT CAR
FIGURE E2

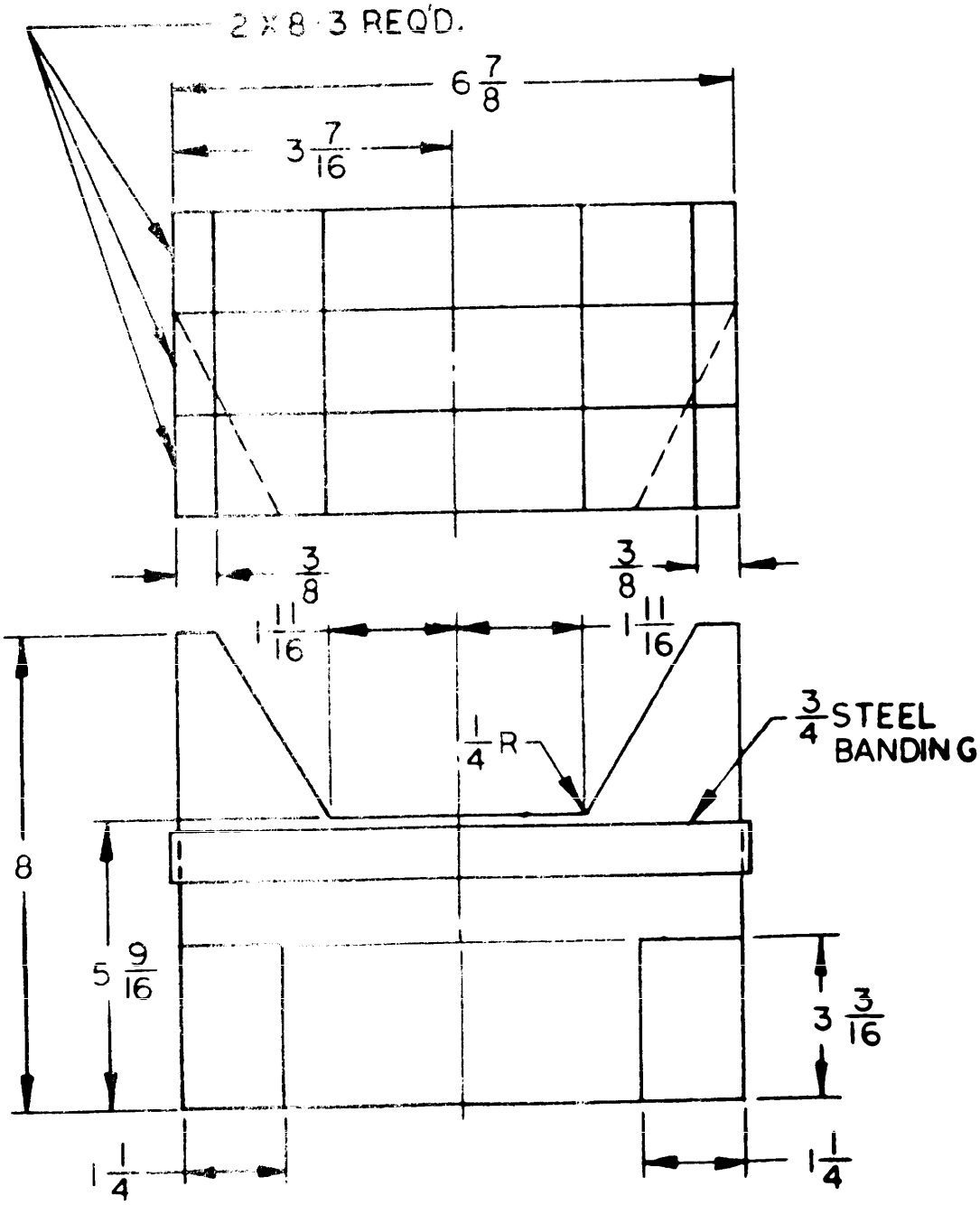

MATERIAL:
WOOD, GROUP II OR III
MIL-STD-731

NAIL 2X8 TOGETHER AT RANDOM USING 12d CC NAILS

FIGURE E3

INSTRUCTIONS: In a continuing effort to make our standardization documents better, the DoD provides this form for use in submitting comments and suggestions for improvements. All users of military standardization documents are invited to provide suggestions. This form may be detached, folded along the lines indicated, taped along the loose edge *(DO NOT STAPLE)*, and mailed. In block 5, be as specific as possible about particular problem areas such as wording which required interpretation, was too rigid, restrictive, loose, ambiguous, or was incompatible, and give proposed wording changes which would alleviate the problems. Enter in block 6 any remarks not related to a specific paragraph of the document. If block 7 is filled out, an acknowledgement will be mailed to you within 30 days to let you know that your comments were received and are being considered.

NOTE: This form may not be used to request copies of documents, nor to request waivers, deviations, or clarification of specification requirements on current contracts. Comments submitted on this form do not constitute or imply authorization to waive any portion of the referenced document*(s)* or to amend contractual requirements.

(Fold along this line)

(Fold along this line)

DEPARTMENT OF THE ARMY

NO POSTAGE NECESSARY IF MAILED IN THE UNITED STATES

OFFICIAL BUSINESS
PENALTY FOR PRIVATE USE $300

BUSINESS REPLY MAIL
FIRST CLASS PERMIT NO 12062 WASHINGTON D. C.

POSTAGE WILL BE PAID BY THE DEPARTMENT OF THE ARMY

Commanding General
Tank Automotive Command
ATTN: DRSTA-GSS
Warren, MI 48090

STANDARDIZATION DOCUMENT IMPROVEMENT PROPOSAL

(See Instructions – Reverse Side)

1. DOCUMENT NUMBER MIL-T-45309E(AT)	2. DOCUMENT TITLE Tank Combat, Full Tracked, 105MM Gun: M60, M60A1 (RISE) and M60A3; Processing for Shipment and Storage Of
3a. NAME OF SUBMITTING ORGANIZATION	4. TYPE OF ORGANIZATION *(Mark one)* ☐ VENDOR ☐ USER ☐ MANUFACTURER ☐ OTHER *(Specify)*: _____
b. ADDRESS *(Street, City, State, ZIP Code)*	

5. PROBLEM AREAS

a. Paragraph Number and Wording:

b. Recommended Wording:

c. Reason/Rationale for Recommendation:

6. REMARKS

7a. NAME OF SUBMITTER *(Last, First, MI)* – Optional	b. WORK TELEPHONE NUMBER *(Include Area Code)* – Optional
c. MAILING ADDRESS *(Street, City, State, ZIP Code)* – Optional	8. DATE OF SUBMISSION *(YYMMDD)*

DD FORM 82 MAR 1426 PREVIOUS EDITION IS OBSOLETE.