Downloaded from http://www.everyspec.com

MILITARY SPECIFICATION

THERMOCOUPLE AND RESISTANCE TEMPERATURE ELEMENT ASSEMBLIES.

TYPE RTE (BB INSTALLATION)

This specification is approved for use by the Naval Sea Systems Command, Department of the Navy, and is available for use by all Departments and Agencies of the Department of Defense.

1. SCOPE

1.1 This specification covers the requirements for resistance temperature elements, (nickel and platinum, designed for installation into stack gas uptakes directly above the economizer on Naval boilers.

2. APPLICABLE DOCUMENTS

2.1 Issues of documents. The following documents, of the issue in effect on date of invitation for bids or request for proposal, form a part of the specification to the extent specified herein.

SPECIFICATIONS

MILITARY
MIL-T-24388 - Thermocouples and Resistance Temperature Element Assemblies, General Specification For (Naval Shipboard).
MIL-T-55164 - Terminal Boards, Molded, Barrier, Screw and Stud Types, and Associated Accessories, General Specification for.

STANDARDS

MILITARY
MIL-STD-108 - Definitions and Basic Requirements for Enclosures for Electric and Electronic Equipment.

(Copies of specifications, standards, drawings, and publications required by contractors in connection with specific acquisition functions should be obtained from the contracting activity or as directed by the contracting officer.)

3. REQUIREMENTS

3.1 Assemblies shall conform to the requirements of MIL-T-24388 except as specified herein.

3.2 Description. Assemblies shall be designed for direct insertion into a threaded connection which has been sufficiently welded to the uptake directly above the economizer on Naval boilers. Resistance temperature assembly shall consist of the following parts (see figure 1):

(a) Sheathed resistance element with reduced sensing tip and hermetic seal.
(b) Extension nipple between boiler stack mounting connection and the electrical connection head.
(c) Connection head, with cover and link chain, containing a terminal block and provided with threaded openings for the extension nipple and for attachment of a conduit.

3.3 Leads. Wires emerging from the hermetic seal shall be 12 to 20 American Wire Gage (AWG).

Beneficial comments (recommendations, additions, deletions) and any pertinent data which may be of use in improving this document should be addressed to: Commander, Naval Ship Engineering Center, SEC 6124, Department of the Navy, Washington, DC 20362 by using the self-addressed Standardization Document Improvement Proposal (DD Form 1426) appearing at the end of this document or by letter.

Downloaded from http://www.everyspec.com

3.4 Enclosure. Assembly shall have a metal connection head similar to that shown on figure 1. Head extension connection shall be 1/2-14 NPSM thread and the conduit connection shall be 3/4 inch NPT. Connection head and extension shall be watertight as defined in MIL-STD-108. Head shall be provided with a screw-on type cap with a link chain provided to connect it to the head. Head shall be capable of satisfactory performance when continuously subjected to the connection head temperature listed in table I. Assembly shall show no evidence of leakage following the enclosure test (see 4.8.3 of MIL-T-24388).

3.4.1 Connection head extension. Connection head extension shall be corrosion-resistant steel minimum wall thickness 0.109 inch nominal the length of which shall be in accordance with table I.

TABLE I. Application.

Type	Designation number	Size (see figure 1) (inches)		Temperature range (°F)	Maximum connection head temperature (°F)	Insertion length (inches)
		L	A			
RTE	30	30	6	-40 to 1000	500	24

3.5 Sheath diameters.

3.5.1 Sheath diameter. Sheath diameter shall be 0.500 plus 0.005 minus 0.068 inch.

3.5.2 Reduced tip diameter. Reduced tip diameter (see 6.2) shall be 0.250 plus or minus 0.005 inch.

3.6 Terminal block. Terminal block shall be in accordance with MIL-T-55164. Terminal block shall be secured to the head by two or more machine screws.

3.7 Performance. General assembly performance shall be as specified in MIL-T-24388 and as specified herein.

3.7.1 Response time. Response time of the assembly shall be 8 seconds or less when tested in accordance with MIL-T-24388.

4. QUALITY ASSURANCE PROVISIONS

4.1 Quality assurance provisions shall be in accordance with MIL-T-24388 except as specified herein.

4.2 Qualification inspection. Qualification inspection shall be as specified in MIL-T-24388 and table II herein.

TABLE II. Qualification inspection.

Examination and tests	Requirement paragraph (MIL-T-24388)	Inspection paragraph (MIL-T-24388)
General examination	3.5	4.6
Calibration	3.9.1.2 and 3.9.1.3	4.9.1.1
Response time	3.7.1 herein	4.8.1
Self heating	3.9.1.1	4.9.1.2
Thermal cycling	3.8.2	4.8.2
Hermetic seal	3.7.6	4.8.4
Salt spray	3.8.1	4.8.5
Insulation resistance	3.8.8	4.8.9
Vibration	3.8.5	4.8.7
Shock	3.8.6	4.8.8
Enclosure	3.4 herein	4.8.3

5. PREPARATION FOR DELIVERY

5.1 Preservation-packaging, packing, and marking shall be in accordance with MIL-T-24388.

Downloaded from http://www.everyspec.com

6. NOTES

6.1 In addition to the notes specified herein (see 6.2) the notes specified in MIL-T-24388 are applicable to this specification.

6.2 Definitions. The following definitions are applicable to this specification:

(a) Reduced tip. The temperature sensitive portion of the sheath reduced to increase the thermal response.

(b) Reduced tip diameter. The outside diameter of the reduced tip.

Preparing activity:
Navy-SH
(Project 6685-N607-4)

Downloaded from http://www.everyspec.com

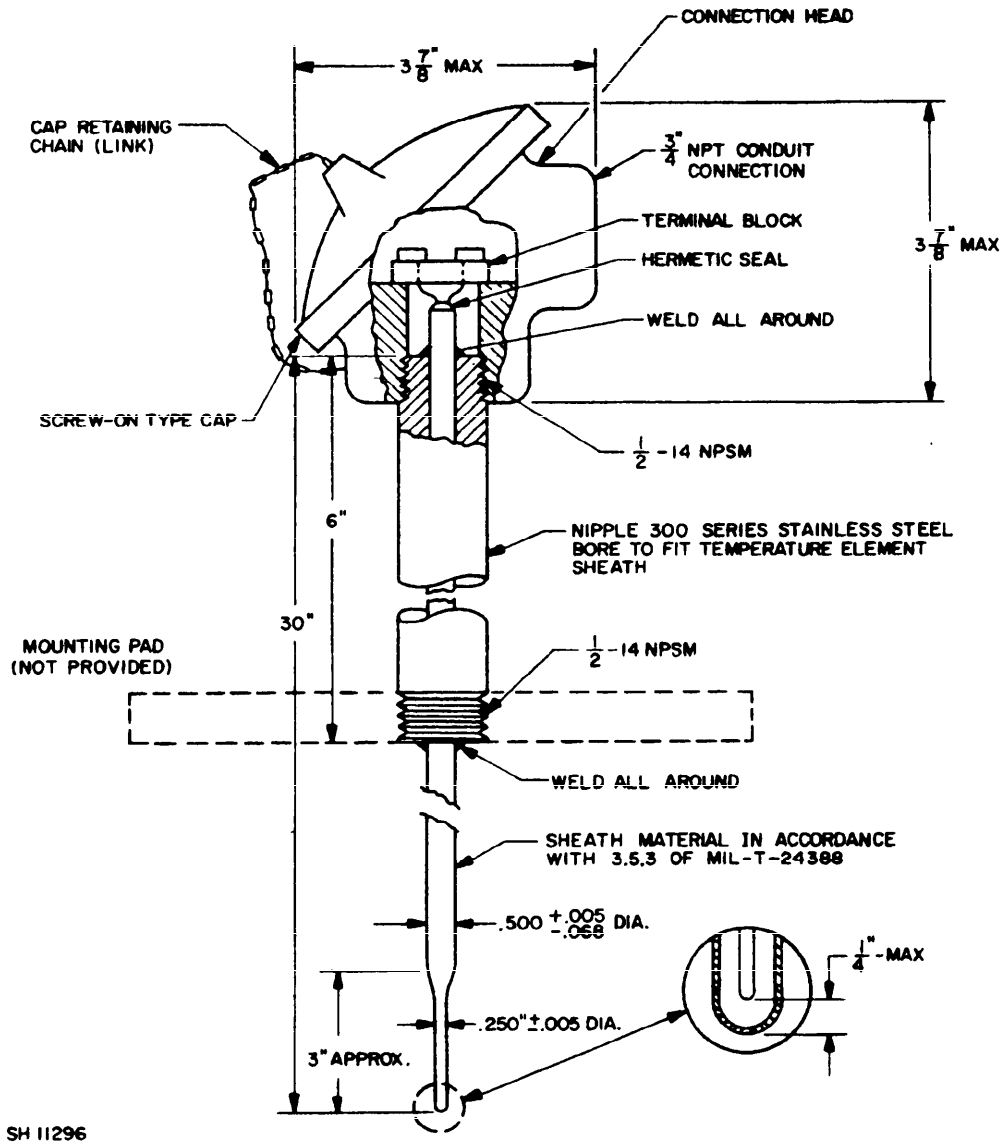

FIGURE 1. Stack gas type resistive temperature assembly.

Downloaded from http://www.everyspec.com

STANDARDIZATION DOCUMENT IMPROVEMENT PROPOSAL

INSTRUCTIONS: This form is provided to solicit beneficial comments which may improve this document and enhance its use. DoD contractors, government activities, manufacturers, vendors, or other prospective users of the document are invited to submit comments to the government. Fold on lines on reverse side, staple in corner, and send to preparing activity. Attach any pertinent data which may be of use in improving this document. If there are additional papers, attach to form and place both in an envelope addressed to preparing activity. A response will be provided to the submitter, when name and address is provided, within 30 days indicating that the 1426 was received and when any appropriate action on it will be completed.

NOTE: This form shall not be used to submit requests for waivers, deviations or clarification of specification requirements on current contracts. Comments submitted on this form do not constitute or imply authorization to waive any portion of the referenced document(s) or to amend contractual requirements.

DOCUMENT IDENTIFIER *(Number)* AND TITLE

MIL-T-24388/4

NAME OF ORGANIZATION AND ADDRESS OF SUBMITTER

☐ VENDOR ☐ USER ☐ MANUFACTURER

1. ☐ HAS ANY PART OF THE DOCUMENT CREATED PROBLEMS OR REQUIRED INTERPRETATION IN PROCUREMENT USE? ☐ IS ANY PART OF IT TOO RIGID, RESTRICTIVE, LOOSE OR AMBIGUOUS? PLEASE EXPLAIN BELOW.

A. GIVE PARAGRAPH NUMBER AND WORDING

B. RECOMMENDED WORDING CHANGE

C. REASON FOR RECOMMENDED CHANGE(S)

2. REMARKS

SUBMITTED BY *(Printed or typed name and address — Optional)*

TELEPHONE NO.

DATE

DD FORM 1 OCT 76 1426

EDITION OF 1 JAN 72 WILL BE USED UNTIL EXHAUSTED.

Downloaded from http://www.everyspec.com

FOLD

COMMANDER
NAVAL SHIP ENGINEERING CENTER (SEC 6124)
DEPARTMENT OF THE NAVY
WASHINGTON, D.C. 20362

OFFICIAL BUSINESS
PENALTY FOR PRIVATE USE $300

POSTAGE AND FEES PAID

DEPARTMENT OF THE NAVY

DOD 316

COMMANDER
NAVAL SHIP ENGINEERING CENTER (SEC 6124)
DEPARTMENT OF THE NAVY
WASHINGTON, D.C. 20362

FOLD