Downloaded from http://www.everyspec.com

MIL-T-23326A(SH)
28 December 1984
SUPERSEDING
MIL-T-23326(SHIPS)
10 April 1963
(See 6.4)

MILITARY SPECIFICATION

THIMBLE, SYNTHETIC ROPE

This specification is approved for use by the Naval Sea Systems Command, Department of the Navy, and is available for use by all Departments and Agencies of the Department of Defense.

1. SCOPE

1.1 Scope. This specification covers commercial thimbles used with synthetic rope.

1.2 Classification. Thimbles shall be the sizes used with 1-1/8- to 10-inch circumference synthetic rope shown on figure 1, as specified (see 6.2).

2. APPLICABLE DOCUMENTS

2.1 Government documents.

2.1.1 Standards. Unless otherwise specified, the following standards of the issue listed in that issue of the Department of Defense Index of Specifications and Standards (DoDISS) specified in the solicitation form a part of this specification to the extent specified herein.

STANDARDS

MILITARY

MIL-STD-105 - Sampling Procedures and Tables for Inspection by Attributes.

MIL-STD-649 - Aluminum and Magnesium Products, Preparation for Shipment and Storage.

(Copies of standards required by contractors in connection with specific acquisition functions should be obtained from the contracting activity or as directed by the contracting officer.)

Beneficial comments (recommendations, additions, deletions) and any pertinent data which may be of use in improving this document should be addressed to: Commander, Naval Sea Systems Command, SEA 55Z3, Department of the Navy, Washington, DC 20362 by using the self-addressed Standardization Document Improvement Proposal (DD Form 1426) appearing at the end of this document or by letter.

Downloaded from http://www.everyspec.com

2.2 Other publications. The following documents form a part of this specification to the extent specified herein. The issues of the documents which are indicated as DoD adopted shall be the issue listed in the current DoDISS and the supplement thereto, if applicable.

ASTM

B 148 - Aluminum-Bronze Sand Castings.

(Application for copies should be addressed to ASTM, 1916 Race Street, Philadelphia, PA 19103.)

(Industry association specifications and standards are generally available for reference from libraries. They are also distributed among technical groups and using Federal agencies.)

2.3 Order of precedence. In the event of a conflict between the text of this specification and the references cited herein, the text of this specification shall take precedence.

3. REQUIREMENTS

3.1 Design. The thimble shall be a one-piece aluminum bronze casting conforming to ASTM B 148, grade D, nonheat treated.

3.2 Thimble strength. Thimbles shall be of sufficient strength to pass the tests specified in 4.4.

3.3 Dimensions. Thimbles shall conform to the dimensions shown on figure 1, as specified (see 6.2).

3.4 Identification. Each thimble shall be marked for identification by giving the rope size circumference and the wording "For Synthetic Rope" as shown on figure 1 (see 6.2 and 6.3). Figures shall be depressed in the casting. Rope circumference may be shown on one side, and the lettering on the other side, when the surface area does not permit all figures on one side.

3.5 Workmanship. The surface of the thimble shall be free from fins and burrs, to prevent snagging of the rope. Groove surfaces for the rope shall be a roughness no greater than 125-microinch finish. Edges shall be rounded full radius.

4. QUALITY ASSURANCE PROVISIONS

4.1 Responsibility for inspection. Unless otherwise specified in the contract or purchase order, the contractor is responsible for the performance of all inspection requirements as specified herein. Except as otherwise specified in the contract or purchase order, the contractor may use his own or any other facilities suitable for the performance of the inspection requirements specified herein, unless disapproved by the Government. The Government reserves the right to perform any of the inspections set forth in the specification where such inspections are deemed necessary to assure supplies and services conform to prescribed requirements.

Source: https://assist.dla.mil -- Downloaded: 2016-11-15T12:54Z
Check the source to verify that this is the current version before use.

Downloaded from http://www.everyspec.com

4.2 Sampling.

4.2.1 Lot. Thimbles of the same size offered for delivery at the same time shall be considered a lot.

4.2.2 Sampling for examination and tests. A random sample of thimbles shall be selected from each lot in accordance with MIL-STD-105, for examination and tests, as specified in 4.2.2.1 and 4.2.2.2.

4.2.2.1 Sampling for examination. A random sample of thimbles shall be selected from each lot with normal inspection Acceptable Quality Level, (AQL) 2.5, for the examination specified in 4.3.

4.2.2.2 Sampling for strength testing. A sample of thimbles shall be randomly selected with an inspection level S-4, (AQL) 0.65, for tests specified in 4.4.

4.3 Examination. Each of the sample thimbles selected in accordance with 4.2.2 shall be visually and dimensionally examined to verify compliance with this specification. Examination shall be conducted as specified in table I. Any thimble in the sample containing one or more defects shall not be offered for delivery. If the number of defective thimbles in any sample equals or exceeds the acceptance number for that sample, as specified in 4.2.2.1, it shall be cause for rejection of the lot represented by the sample.

TABLE I. Classification of defects.

Categories	Defects
Critical:	Thimble does not pass load tests.
Major:	
101	Thimble material, not as specified (see 3.2).
102	Dimensions not in conformance with figure 1 within specified tolerances.
103	Groove for rope does not have the specified surface finish (see 3.5).
104	Thimble edges sharp and not rounded as specified (see 3.5).
105	Identification figures cast in thimble are not legible.
106	Casting is porous and has imperfections.
Minor:	None.

4.4 Strength tests. Sample thimbles shall be tested by the application of loads specified in table II. There shall be no permanent deformation or cracks as a result of the strength test. If the number of thimbles equals or exceeds the rejection number specified in 4.2.2.2, the lot shall be rejected.

Downloaded from http://www.everyspec.com

TABLE II. Loading for strength tests.

Synthetic rope circumference	Test load
(Inches)	(Pounds)
1-1/8 - 1-1/4	4,900
1-1/2 - 1-3/4	7,700
2 - 2-1/4	12,600
2-1/2 - 2-3/4	17,600
3	24,200
3-1/2 - 3-3/4	36,300
4	41,200
4-1/2	50,600
5	62,700
5-1/2	74,800
6	89,000
6-1/2	99,000
7	121,000
8	150,700
9	187,000
10	222,000

4.4.1 Test shall be performed in a testing machine using synthetic rope to simulate actual working conditions.

4.5 Inspection of packaging. Sample packages and packs, and the inspection of the preservation-packaging, packing and marking for shipment and storage shall be in accordance with the requirements of section 5 and the documents specified therein.

5. PACKAGING

(The preparation for delivery requirements specified herein apply only for direct Government acquisition.)

5.1 Packaging, packing and marking. Thimbles shall be packaged level A or C, packed level A, B, or C as specified (see 6.2) and marked in accordance with MIL-STD-649, as applicable for castings.

6. NOTES

6.1 Intended use. The thimbles covered by this specification are intended for use with synthetic rope, with the exception of emergency towing application.

Source: https://assist.dla.mil - Downloaded: 2016-11-15T12:54Z
Check the source to verify that this is the current version before use.

Downloaded from http://www.everyspec.com

6.2 Ordering data. Acquisition documents should specify the following:

(a) Title, number, and date of this specification.
(b) Size and quantity of thimbles (see 1.2 and 3.3).
(c) Identification markings required (see 3.4).
(d) Number of thimbles per shipping container, if desired.
(e) Levels of packaging and packing and marking requirements, (see 5.1).

6.3 Identification. In marking the thimble (see 3.4), the wording "For Plastic Rope" may be used until the tooling or pattern is required to be replaced.

6.4 Changes from previous issue. Asterisks are not used in this revision to identify changes with respect to the previous issue, due to the extensiveness of the changes.

Preparing activity:
Navy - SH
(Project 4030-N012)

Downloaded from http://www.everyspec.com

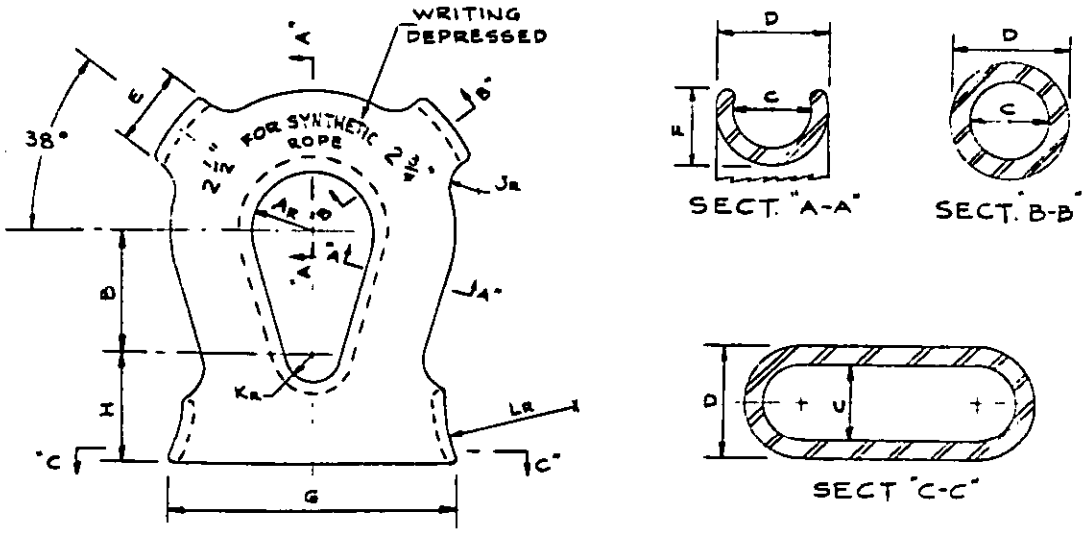

Rope diam. (reference)	Rope circum.	2/A	2/B	1/C	1/D	2/E	2/F	2/G	2/H	2/J	2/K	2/L	Anchor shackle size	Approx weight pounds
3/8-7/16	1-1/8-1-1/4	7/16	13/16	9/16	3/4	1/2	1/2	2-1/16	5/8	3/16	3/16	1	3/8	0.3
1/2-9/16	1-1/2-1-3/4	1/2	1	11/16	29/32	9/16	5/8	2-3/8	7/8	1/4	7/32	1-1/16	7/16	.5
5/8-3/4	2-2-1/4	9/16	1-3/16	7/8	1-1/8	5/8	3/4	3-1/8	1	9/32	9/32	1-1/8	9/16	.6
13/16-15/16	2-1/2-2-3/4	5/8	1-7/16	1-1/16	1-3/8	3/4	13/16	3-3/4	1-3/16	3/8	5/16	1-3/16	5/8	.9
1	3	13/16	1-9/16	1-3/16	1-9/16	1	7/8	4-1/4	1-3/8	7/16	13/32	1-1/4	3/4	1.6
1-1/8-1-1/4	3-1/2-3-3/4	15/16	1-7/8	1-7/16	1-27/32	1-1/16	1	5-1/16	1-9/16	1/2	15/32	1-5/16	7/8	1.9
1-5/16	4	1-1/16	2	1-1/2	1-15/16	1-1/8	1	5-1/2	1-3/4	1/2	17/32	1-3/8	1	2.6
1-1/2	4-1/2	1-3/16	2-1/4	1-11/16	2-5/32	1-3/16	1-1/8	6-1/4	1-7/8	1/2	5/8	1-7/16	1	3.2
1-5/8	5	1-5/16	2-7/16	1-13/16	2-5/16	1-1/4	1-1/4	6-3/4	2-1/16	1/2	23/32	1-1/2	1-1/8	4.8
1-3/4	5-1/2	1-7/16	2-5/8	2	2-17/32	1-5/16	1-3/8	7-3/8	2-5/16	3/4	13/16	1-5/8	1-1/4	7.8
2	6	1-5/8	2-7/8	2-1/4	2-13/16	1-3/8	1-1/2	8-3/8	2-1/2	1	29/32	1-11/16	1-1/4	8.5
2-1/8	6-1/2	1-3/4	3-1/16	2-3/8	3	1-7/16	1-5/8	9	2-11/16	1	1	1-3/4	1-3/8	9.5
2-1/4	7	1-15/16	3-1/4	2-1/2	3-1/8	1-1/2	1-3/4	9-3/8	2-7/8	1	1-1/8	2	1-1/2	10.6
2-5/8	8	2-3/16	3-11/16	2-7/8	3-5/8	1-5/8	1-7/8	10-5/8	3-1/4	1	1-1/4	2-1/8	1-5/8	18.5
3	9	2-7/16	4-1/8	3-1/4	4-1/8	1-3/4	2	11-3/4	3-5/8	1-1/4	1-3/8	2-1/4	2	24.0
3-1/4	10	2-11/16	4-9/16	3-1/2	4-1/2	1-7/8	2-1/4	13-1/8	4	1-1/2	1-1/2	2-1/2	2	38.0

1/ Tolerance on dimensions C and D $^{+0}_{-3}$ percent.

2/ Tolerance on all other dimensions ± 8 percent.

SH 7111

FIGURE 1. Thimble sizes and dimensions.

Downloaded from http://www.everyspec.com

(TO DETACH THIS FORM, CUT ALONG THIS LINE.)

STANDARDIZATION DOCUMENT IMPROVEMENT PROPOSAL

(See Instructions – Reverse Side)

1. DOCUMENT NUMBER	2. DOCUMENT TITLE
MIL-T-23326A(SH)	Thimbles, Synthetic Rope

3a. NAME OF SUBMITTING ORGANIZATION	4. TYPE OF ORGANIZATION *(Mark one)*
	☐ VENDOR
b. ADDRESS *(Street, City, State, ZIP Code)*	☐ USER
	☐ MANUFACTURER
	☐ OTHER *(Specify)*: _____

5. PROBLEM AREAS

a. Paragraph Number and Wording:

b. Recommended Wording:

c. Reason/Rationale for Recommendation:

6. REMARKS

7a. NAME OF SUBMITTER *(Last, First, MI)* – Optional	b. WORK TELEPHONE NUMBER *(Include Area Code)* – Optional
c. MAILING ADDRESS *(Street, City, State, ZIP Code)* – Optional	8. DATE OF SUBMISSION *(YYMMDD)*

DD FORM 82 MAR 1426

PREVIOUS EDITION IS OBSOLETE.