Downloaded from http://www.everyspec.com

MIL-T-17600D(SHIPS)
18 March 1968
SUPERSEDING
MIL-T-17600C(SHIPS)
21 September 1966
(See 6.5)

MILITARY SPECIFICATION

TURBINES, STEAM, PROPULSION

NAVAL SHIPBOARD

1. SCOPE

1.1 Scope.- This specification covers propulsion steam turbines for Naval ships.

1.2 Classification.- Steam turbines shall be of the following types as specified (see 6.2.2).

Type I - Single-casing, single-element (see 3.5.5.1).
Type II-A - Two casings, two-elements, straight-through (see 3.5.5.2).
Type II-B - Two casings, two-elements, external by-pass (see 3.5.5.3).
Type II-C - Two casings, two-elements, internal by-pass (see 3.5.5.4).
Type III - Two casings, three-elements, series-parallel (see 3.5.5.5).

2. APPLICABLE DOCUMENTS

2.1 The following documents of the issue in effect on date of invitation for bids or request for proposal form a part of the specification to the extent specified herein.

SPECIFICATIONS

FEDERAL

QQ-S-624 - Steel Bar, Alloy, Hot Rolled and Cold Finished, (General Purpose).
QQ-S-631 - Steel, Bar, Carbon, Hot Rolled, (Special Quality).
QQ-S-634 - Steel, Bar, Carbon, Cold Finished, (Standard Quality).
QQ-S-635 - Steel Plate, Carbon.
QQ-S-691 - Steel Plate, Carbon-Silicon, Carbon Molybdenum and Manganese-Molybdenum Alloys Hot Rolled, (Marine Boiler Quality).
QQ-S-763 - Steel, Bars, Wire, Shapes, and Forgings, Corrosion-Resisting.
QQ-S-766 - Steel Plates, Sheets and Strip -- Corrosion Resisting.
QQ-T-390 - Tin Alloy Ingots and Castings and Lead Alloy Ingots and Castings (Antifriction Metal) For Bearing Applications.

MILITARY

JAN-W-562 - Wire, Nickel-Alloy, Spring (Heat-Resistant and Age-Hardenable).
MIL-S-860 - Steel: Forgings for Steam Turbine Rotors.
MIL-S-861 - Steel Bars, Corrosion Resisting, Naval Steam Turbine Parts Use.
MIL-S-870 - Steel, Alloy, Molybdenum Alloy.
MIL-S-890 - Steel: Forgings and Bars for Hulls, Engines, and Ordnance (Heat Treated).
MIL-S-901 - Shock test, H.I. (High-Impact); Shipboard Machinery, Equipment and Systems, Requirements For.
MIL-D-1000 - Drawings, Engineering and Associated Lists.
MIL-S-1222 - Studs, Continuous Thread (Bolt Studs); Nuts, Plain, Hexagon; and Steel Bars, Round-High Temperature Service.
MIL-C-5015 - Connectors, Electric, "AN" Type.
MIL-N-7786 - Nickel-Chromium Alloy, Sheet and Strip, Age-Hardenable Annealed.
MIL-Q-9858 - Quality Program Requirements.
MIL-M-9868 - Microfilming of Engineering Documents, 35MM, Requirements For.
MIL-C-9877 - Cards, Aperture.
MIL-M-15071 - Manuals, Equipment and Systems.
MIL-S-15083 - Steel Castings.
MIL-P-15137 - Provisioning Technical Documentation for Repair Parts For Electrical and Mechanical Equipment (Naval Shipboard Use).
MIL-C-15345 - Castings, Nonferrous, Centrifugal.
MIL-S-15464 - Steel, Alloy, Chromium-Molybdenum, Castings.
MIL-L-15719 - Lubricating Grease (High-Temperature, Electric Motor, Ball and Roller Bearings).
MIL-S-16216 - Steel Plate, Alloy, Structural, High Yield Strength (HY-80 and HY-100).
MIL-S-16993 - Steel Castings (12-Percent Chromium).

Downloaded from http://www.everyspec.com

MILITARY (Cont'd)

MIL-R-17131 - Rods, Welding, Surfacing
MIL-P-17286 - Propulsion and Auxiliary Steam Turbines and Gears (Including Repair Parts, Tools, Accessories and Instruments), Packaging of.
MIL-L-17331 - Lubricating Oil, Steam Turbine (Non-Corrosive).
MIL-E-17813 - Expansion Joints, Pipe, Packless.
MIL-V-18030 - Valves, Control, Air-Diaphragm-Operated.
MIL-S-18410 - Steel Bars, Billets and Forgings-Chromium-Molybdenum Alloy.
MIL-V-20065 - Valves, Angle, Pressure Relief, Naval Shipboard, For Steam Service.
MIL-S-21427 - Strainer Assemblies, Main Steam, High Pressure (Sizes 4 Inches and Above).
MIL-T-22051 - Temperature Element, Resistance, Bearing Babbitt.
MIL-S-22698 - Steel Plate, Carbon, Structural, For Ships.
MIL-S-23966 - Steel Bars, Billets and Forgings -- Alloy Nitriding Application.
MIL-S-24093 - Steel Forgings, Carbon and Alloy Heat Treated.
MIL-S-24113 - Steel Plates, Carbon Manganese-Heat Treated by Normalizing or Quenching and Tempering.
MIL-N-24129 - Nuts, Self-Locking, Hexagon, (Plastic Insert) 250°F.
MIL-I-24137 - Iron Castings, Nodular Graphitic (Ductile Iron) and Nodular Graphitic (Corrosion Resisting, Austenitic, Low Magnetic Permeability) (For Shipboard Application).
MIL-W-24270/1 - Well (For Temperature Indicators or Thermal Elements), Insertion Length - 2 Inches, Bore - 3/8 Inch, Connection - Socket Weld or Socket Brazed, 3/4 Inch IPS, Maximum Pressure 200 and 3000 PSIG.
MIL-N-25027 - Nut, Self-Locking, 250°F, 450°F, and 800°F, 125 KSI FTU, 60 KSI FTU, and 30 KSI FTU.
MIL-M-38761 - Microfilming and Photographing of Engineering/Technical Data and Related Documents PCAM Card Preparation, Engineering Data Micro-Reproduction System, General Requirements for, Preparation of.

DEPARTMENT OF THE NAVY

General Specification for Ships of the United States Navy.
Section 9480-0 - General Requirements for Piping Systems.

STANDARDS

MILITARY

MIL-STD-271 - Nondestructive Testing Requirements for Metals.
MIL-STD-438 - Schedule of Piping, Valves, Fittings and Associated Piping Components for Submarine Service.
MIL-STD-777 - Schedule of Piping, Valves, Fittings and Associated Piping Components for Surface Ships.
MIL-STD-804 - Formats and Coding of Aperture, Copy and Tabulating Cards for Engineering Data Micro-Reproduction System.
MS15003 - Fittings, Lubrication (Hydraulic) Surface Check, 1/8 Pipe Threads, Steel, Type III.
MS21208 - Insert, Screw Thread, Coarse and Fine, Free Running, Helical Coil, CRES.

DRAWINGS

MILITARY

810-1385917 - Thermometers, Bulbs and Wells.

PUBLICATIONS

NAVSHIPS

NAVSHIPS 250-644-2 - Bearing Babbitting Procedures.
NAVSHIPS 0900-003-8000 - Surface Inspection Standards for Metals.
NAVSHIPS 0900-003-9000 - Radiographic Standards for Production and Repair Welds.

2.2 Other publications.- The following documents form a part of this specification to the extent specified herein. Unless otherwise indicated, the issue in effect on date of invitation for bids or request for proposal shall apply.

Downloaded from http://www.everyspec.com

AMERICAN SOCIETY FOR TESTING AND MATERIALS (ASTM)
A434 - Quenched and Tempered Alloy Steel Bars, Hot-Rolled or Cold-Finished.
E186 - Reference Radiographs for Heavy-Walled, Steel Castings.
E208 - Conducting Drop Weight Test to determine Nil-Ductility Transition Temperature of Ferritic Steels.
E280 - Reference Radiographs for Heavy-Walled, Steel Castings.

(Application for copies should be addressed to the American Society for Testing and Materials, 1916 Race Street, Philadelphia, Pennsylvania 19103.)

AMERICAN SOCIETY OF MECHANICAL ENGINEERS (ASME)

Boiler and Pressure Vessel Code
Section VIII - Unfired Pressure Vessels.
Section IX - Welding Qualifications.
Power Test Code

(Application for copies should be addressed to the American Society of Mechanical Engineers, 345 East 47th Street, New York, N. Y. 10017.)

AMERICAN WELDING SOCIETY (AWS)
A2.0 - Standard Welding Symbols.
A2.2 - Nondestructive Testing Symbols.

(Application for copies should be addressed to the American Welding Society, 345 East 47th Street, New York, N. Y. 10017.)

UNITED STATES OF AMERICA STANDARDS INSTITUTE (USAS)
B1.2 - Class 5 Interference-Fit Thread.

(Application for copies should be addressed to the United States of America Standards Institute, 10 East 40th Street, New York, N. Y. 10016.)

NATIONAL BUREAU OF STANDARDS
Handbook H28 - Screw Thread Standards for Federal Services

(Application for copies should be addressed to the Superintendent of Documents, Government Printing Office, Washington, D.C. 20402.)

POST OFFICE DEPARTMENT
Postal Regulations

(Application for copies should be addressed to the Post Office Department, Washington, D. C. 20260.)

Downloaded from http://www.everyspec.com

3. REQUIREMENTS

3.1 Definitions.- Unless otherwise specified hereinafter, terms and expressions shall be interpreted in accordance with definitions contained in Webster's New International Unabridged Dictionary.

3.1.1 Ahead element.- Ahead element is defined as that part of the propulsion unit which delivers power to propel the ship forward.

3.1.2 Astern element.- Astern element is defined as that part of the propulsion unit which delivers power to the ship when backing.

3.1.3 Single-flow turbine.- Single-flow turbine pertains to a configuration wherein all of the steam is confined to a single blade path as it expands through the turbine.

3.1.4 Double-flow turbine.- Double-flow turbine pertains to a configuration wherein steam divides at a point in the steam path and flows through two blade paths from that point on.

3.1.5 Impulse element or turbine.- Impulse element or turbine pertains to the basic design where the enthalpy drop across each stage occurs principally in the nozzle or nozzle diaphragm, and essentially no pressure drop occurs across the rotating blades. Predominant rotational effort in this turbine results from the impulse effect of steam directed through nozzles against rotating blades. This design type is identified with wheels integral with rotor and nozzle diaphragms between the wheels.

3.1.6 Reaction element or turbine.- Reaction element or turbine pertains to the basic design where the enthalpy and pressure drops in each stage are divided nearly equally between stationary and rotating blading Predominant rotational effort in this turbine results from the reaction to steam as it leaves each row of rotating blades This design is identified with drum-type rotor with radial seals for stationary and rotating blading

3.1 7 "Hand" (blading).- The "hand" of turbine blading shall be designated as right-hand or left-hand as follows·

(a) Right-hand blading.- Blading is right-hand when turbine rotor rotates clockwise when viewed in the direction of steam flow.
(b) Left-hand blading.- Blading is left-hand when turbine rotor rotates counterclockwise when viewed in the direction of steam flow.

3.1.8 Propulsion unit.- Turbines for one propeller shaft comprise a propulsion unit.

3.1.9 Endurance power.- Endurance power is that partial power at which required cruising radius of the ship is specified.

3 1.10 Government inspector.- Government inspector or "Inspector" as used herein refers to the Government quality assurance representative who has cognizance of the plant at which the part or component is being produced or tested.

3.2 Equipment required.-

3.2.1 Turbines.- Turbines shall be furnished in the quantity and to the specifications set forth herein and in the ordering data (see 6.2.2).

3.2.2 Additional equipment, fittings and accessories.- Additional equipment, fittings and accessories shall be furnished with the turbines as necessary to meet the requirements herein. The items listed in 3.2.2.1 shall be furnished by the turbine manufacturer unless amended in 6.2.2(n). Items which will be furnished by shipbuilder or other vendors are listed in 3.2.2.2 for information.

3.2.2.1 Items furnished with turbines.- Items to be furnished by the turbine manufacturer shall be as follows.

(a) Bolts between items furnished and for turbine end of turbine-condenser flexible connection (see 3.20.9.3)
(b) Control valves (nozzle, by-pass, and transfer) and control mechanisms at turbine (see 3.11.7)

Downloaded from http://www.everyspec.com

(c) Cross-over pipe(s) including expansion joint (see 3.11.3)
(d) Drawings and microfilm (see 3.28 and 3.29)
(e) Gland seal regulating valves (see 3.9.1)
(f) Governing and overspeed devices when overspeed protection is required (see 3.10.7)
(g) Grease fittings (see 3.8.11)
(h) Devices for attaching insulation and lagging (see 3.6)
(i) Identification plates (see 3.20.19)
(j) Lifting gear (see 3.20.11)
(k) Mating flanges for lube oil inlet connections (see 3.11.2.2)
(l) Moisture separator for nuclear cross-compound units (see 3.11.5)
(m) Onboard repair parts (see 3.27)
(n) Onboard tools (see 3.26)
(o) Reports (see 3.32)
(p) Rotor position indicator (see 3.7.4)
(q) Sentinel valves (see 3.11.6)
(r) Bearing sight flow fittings and thermometer wells (see 3.7.2)
(s) Singling-up fittings for single shaft ships (see 3.10.9)
(t) Strainer for T-G sets (see 3.11.4)
(u) Technical data books (see 3.31)
(v) Manuals (see 3.30)
(w) Template or jig for condenser flange (see 3.20.9.2.1)
(x) Template for coupling flange (see 3.5.4)
(y) Thermometer wells (steam) (see 3.7.1)
(z) Trip throttle valve for T-G sets (see 3.10.8.1)

3.2.2.2 Items furnished by shipbuilder or other vendors.- Items to be furnished by the shipbuilder or other machinery vendors include, but are not restricted to, the following:

(a) Ahead handwheel and reach-rod system (including valve position indicator).
(b) Astern valve and handwheel and reach-rod system.
(c) Bearing temperature monitor for RTE'S.
(d) Bolting and chocks to foundation, and bolts and gaskets required for shipbuilder piping connections to turbine.
(e) Desuperheater when required for singled-up operation.
(f) Drain valves, orifices and traps.
(g) Extraction and induction valves.
(h) Flexible connections for connecting resiliently-mounted turbines to ship systems or other components.
(i) Gages (local and for main gageboard).
(j) Girders for H.P. and H.P. -I.P. turbines (if required).
(k) Gland seal and leak-off system (excluding regulating valve(s)).
(l) Guarding valve.
(m) Insulation (thermal) and lagging.
(n) Lifting gear other than that required to be furnished by turbine manufacturer (see 3.20.11).
(o) Low-pressure L.O. alarm.
(p) Lubrication system (external to turbine)
(q) Operating and safety plates for machinery spaces.
(r) Quick-closing inlet valve (if required) for clutched turbines.
(s) Singling-up special steam supply valve and inlet pipe to L.P. turbine.
(t) Strainer, main steam (except for turbine-generator).
(u) Thermometers (steam and oil) for local installation on turbines and for main gageboard.

3.2.3 Engineering services.- For Naval Ship Systems Command (NAVSHIPS) or Naval Ship Engineering Center (NAVSEC) procurements, the turbine manufacturer shall, to the extent requested by the building yard and approved by the cognizant Supervisor of Shipbuilding or Commander of Naval Shipyard, furnished the services of competent engineer(s) to provide supervisory assistance during assembly, installation, alignment and adjustment of units, as well as attendance at dock and sea trails. The number of man days for this purpose shall be as specified in the contract.

3.3 Design concepts and basic criteria.-

3.3.1 Reliability.- The principle of reliability is paramount and no compromise of this principle shall be made with any other requirements. It is intended that casings, rotors, diaphragms and blading not be replaced or repaired during the specified life except for damage incurred due to external causes unrelated to design. Planned

Downloaded from http://www.everyspec.com

maintenance actions to be performed will be in accordance with figure 1 with replacement or renewal of parts as found necessary. Turbines casings will normally not be lifted for routine inspection of internal parts unless there are indications of damage or deterioration of performance.

3.3.2 Standardization.- Interchangeability of components and parts with units previously furnished is desired with particular reference to repair parts. The turbine manufacturer shall notify NAVSHIPS when design changes are made which result in non-interchangeability with spare parts previously furnished.

3.3.3 Accessibility.- Design shall, within space limitations, provide the maximum accessibility to turbine parts which require routine inspection, maintenance and repairs. It is intended that design provide for minimum effort required to acccomplish planned maintenance actions and to effect repairs.

3.3.4 Cost.- Cost of turbines is to be considered of such importance that, where there is a choice in design with each choice providing full reliability and meeting other criteria herein, the choice representing the least cost to the Navy for initial procurement and maintenance in service be exercised. It is imperative that design eliminate features which are unnecessary and are of marginal value.

3.3.5 Life.- Turbine design shall be based on a life expectancy of 150,000 hours of operation. This includes 15,000 hours at design full power and 60,000 hours between 50 percent and 100 percent of design full power. (This represents 30 years life at approximately 58 percent utilization per year)

3.3.6 Margin.- Horsepower rating of the turbines shall be as specified in the contract. Extra capacity beyond the turbine manufacturer's normal margin is not required.

3.3.7 Weight.- When specific weight limitations exist, they will be specified (see 6.2.2(f)); if not specified, weight shall be kept to a minimum consistent with other requirements herein.

3.3.8 Extraction, induction and reheat.- Except for the introduction of steam into the blade path of turbine casings from excess gland steam and high pressure valve steam leak-offs (see 3.9.4) no provision shall be made for extraction, induction or reheat unless specifically required in the contract (see 6.2.2(h)). When extraction is specified, means to prevent steam from entering the turbine will be provided by the shipbuilder.

3.3.9 Exceptions to specifications.- Where the turbine manufacturer believes that he can supply turbines of acceptable quality by proposing a substitution for any given design requirement in this specification, he may do so, providing all of the following are satisfied;

(a) The substitution does not compromise reliability or other criteria herein.
(b) The substitution does not increase the contract cost or result in the subsequent higher cost of maintaining the equipment in service after acceptance by the Government.
(c) The substitution represents sound engineering approach to the original specification requirements based upon any of the following·

(1) Previous satisfactory experience in service (Naval or comparable service).
(2) Test results acceptable to NAVSEC.

Request(s) for substitution may also be submitted after award of contract and are encouraged where either design improvements or cost reductions are involved.

3.4 Materials.- Specified materials are listed in figure 2; however, the manufacturer's List of Preferred Materials (see 3.4.2.1.1), when approved, shall replace figure 2 and is not subject to revision under each contract to reflect later issues of Government specifications unless specified (see 6.2.2.(c)). Materials for other turbine parts shall be at the manufacturer's option, however, corrosion resistant materials shall be used for internal applications of shims, lugs, keys and similar removable parts exposed to the steam atmosphere. (Bolting for nozzle block and inner casing is not included). Except for piston rings, the use of cast iron will not be permitted (gray iron and close grain semi-steel are, for the purposes of this specification, considered to be cast iron). The use of nodular (ductile) iron for other than packing rings or piston rings requires NAVSEC approval.

Downloaded from http://www.everyspec.com

3.4.1 Allowable variations in material properties.- Use of materials with chemical analyses or mechanical properties outside of specification limits is acceptable provided that minimum factors of safety are met and welding properties are not adversely affected.

3.4.1.1 Special requirements for saturated steam applications. Where turbines are to be used with saturated steam at inlet to turbines, 12 chrome materials shall be used for the following items in high pressure and single casing turbines. The use of inlays or inserts to obtain corrosion/erosion protection will be considered if basic design parameters (such as size of casting) preclude the use of a 12 chrome base material. The use of 12 chrome journals with babbitted bearings is not acceptable, therefore, journals of 12 chrome rotors shall be either chrome plated, sleeved or otherwise protected by a means approved by NAVSEC.

(a) Casings (carbon steel is acceptable for exhaust end of single casing turbines and for astern steam ring or casing).
(b) Rotors.
(c) Packing boxes or casings when separate from casing
(d) Valve chest cover.
(e) Nozzle blocks.
(f) Diaphragms.

For low pressure turbines, corrosion/erosion protection for the areas listed below shall be provided by the use of either 12 chrome base materials, inlays or inserts.

(a) Vertical and horizontal sealing surfaces of ahead diaphragms.
(b) Sealing face of diaphragm grooves in casing for ahead stages.
(c) Sealing surface of packing boxes.

3.4.2 Substitute materials.- The use of materials (either additional Government specifications or company materials in lieu of specified Government specifications) differing from those specified in figure 2 will be permitted when all of the following conditions are met:

(a) The use of other materials represents no cost increase to the Navy.
(b) Minimum factors of safety can be met with material in accordance with the applicable Government specification.
(c) List of preferred materials has been approved prior to the contract. (The date of the NAVSEC approval letter must be within two years of the contract date.)

3.4.2.1 Approval procedure for substitute materials.- The turbine manufacturer shall submit a "List of (Company Name) Preferred Materials for Propulsion Steam Turbines" (see 3.4.2.1.1) to NAVSEC for approval. A maximum of six months from the date of submittal shall be allowed for NAVSEC approval. Once the list is approved, it shall be reviewed at least every two years for currency with the referenced Government Specifications. NAVSEC will forward a list of the specifications which have been revised for use in conducting the review. A conference shall then be held to re-approve the list and related comparison sheets. Changes to the manufacturer's materials require approval when they occur if revisions involve physicals, chemistry, processing or relaxation of quality control. Revisions to the List of Preferred Materials are not retro-active unless mutually agreed upon. As a backup to the List of Preferred Materials, material comparison sheets (see 3.4.2.1.2) shall be submitted in order to evaluate the acceptability of the proposed substitute material. Where it is not obvious, the forwarding letter shall indicate the reasons for departures from the quality control requirements of the applicable Government specification. Approval of a comparison sheet constitutes approval to substitute that material only for the applications shown on the List of Preferred Materials

Downloaded from http://www.everyspec.com

3.4.2.1.1 List of preferred material.- The List of Preferred Material shall be a drawing similar in format to the following:

Part or Service	Government specification	Company Spec.	ASTM Spec.	Temperature Limit	Remarks	NAVSEC approval letter
(List in same order as figure 2			(if applicable)	(Shall not exceed limit of figure 2)		(Serial nr and date

Only the Government specifications which are used or substituted for by the company need be shown. Material comparison sheets shall be shown in the remarks column unless material identification number is identical. If the company specification is identical in every respect to the Government specification, such may be noted in remarks column and comparison sheets are not required.

3.4.2.1.2 Material comparison sheets.- For each substitute material which is different from the applicable government specification, the manufacturer shall document on a separate sheet of paper a complete comparison in any of the following areas where any difference exists between the substitute material and the specified material

(a) Chemical composition.
(b) Mechanical or physical properties.

Only significant differences between the substitute material and the specified material require documentation for the following areas, however, all instances where a requirement of the specified materials is not reflected in the substitute specification shall be included:

(c) Processing (heat treatment, and so forth).
(d) Examination, tests and quality control provisions.

If the substitute material is identical in all respects with the specified material in any of the above areas, a statement shall be made to that effect in lieu of a comparison, the statement "equal or better" is not acceptable. Each of the above documentations shall constitute one or more sheets in a multi-sheet drawing, properly indexed and titled. The issue of the Government specification for which comparison is being made shall be shown. If there is no applicable Government specification, the comparison sheet shall provide a comparison with an ASTM specification if applicable; if not, submit information covering only the company material. Each sheet shall be dated when issued and when revised. When a comparison sheet has been approved, it shall be resubmitted for information with NAVSEC approval letter noted thereon.

3.4.2.2 Approval of non-specified materials.- Materials for parts not specified in figure 2 shall be self approved by the manufacturer.

3.5 Arrangement.- Arrangement of propulsion unit(s), overall dimensions and shaft rake shall be as specified (see 6.2.2(d)).

3.5.1 Shaft rotation.- Propellers having clockwise rotation when viewed from aft are right-hand propellers; propellers having counterclockwise rotation when viewed from aft are left-hand propellers. Normally, starboard and center-lined propellers are right-hand and port propellers are left-hand. Rotation of turbines will be the same as that of the driven propellers if connected by a double reduction gear, and will be opposite if connected by a single or triple reduction gear. Type I turbine driving generators shall be right-hand rotation.

3.5.2 Shaft identification.- Each propulsion unit shall be identified with either the propeller shaft it drives or by the location in ship. This normally will be "Port" and "Starboard" or by numerical designation starting on starboard side; for example, on a four shaft ship, starboard outer shaft is #1 unit, starboard inner shaft is #2 unit, and so forth.

3.5.3 Reduction gears.- Each propulsion unit will normally be connected to its propeller through reduction gears.

Downloaded from http://www.everyspec.com

3.5.4 Couplings.- Turbines normally shall be designed for connection to reduction gears through dental couplings. The turbine manufacturer shall determine the coupling flange size and bolting arrangement and, if required by the gear manufacturer, shall furnish a template for drilling the mating coupling flange.

3.5.5 Types of propulsion units.- Propulsion units (see 3.1.8) shall be identified by the types specified in 3.5.5.1 through 3.5.5.5 based on arrangement of ahead elements. Astern elements shall be as specified in 3.5.6. Ahead elements of L.P. turbines may be either of the impulse or reaction type; all other ahead and astern elements shall be of the impulse type.

3.5.5.1 Type I (single casing).- The type I propulsion unit shall consist of one or more single-casing turbines of equal rating. Each turbine shall contain one ahead element and shall be single flow with the expansion of steam complete within the casing.

3.5.5.2 Type II-A (straight-through).- The type II-A propulsion unit shall consist of one high pressure element and one low pressure element. Each element shall be contained in a separate casing (known as H.P. and L.P. turbines respectively) and shall each deliver power to a separate coupling in a reduction gear. Design shall provide for approximately (plus or minus 2 percent) equal power at the coupling at full power. H.P. turbine shall be single flow; L.P. turbine may be either single or double flow. No row of blading shall be by-passed at any load, except for partial by-passing of the H.P. turbine first stage at high powers.

3.5.5.3 Type II-B (external by-pass).- The type II-B propulsion unit shall conform to the type II-A turbine except that provisions shall be made for by-passing of steam around the first one or more stages of the H.P. turbine at powers above the specified cruising power.

3.5.5.4 Type II-C (internal by-pass).- The type II-C propulsion unit shall conform to the type II-A unit except that provisions shall be made for by-passing steam from the first stage shell around the next one or more stages of the H.P. turbine above the specified cruising power.

3.5.5.5 Type III (series-parallel).- The type III propulsion unit shall consit of one H.P. element, one intermediate pressure (I.P.) element and one L.P. element. The H.P. and I.P. elements shall be combined in a single-casing, and shall be known as the H.P.-I.P. turbine. The L.P. element, together with its casing, shall be known as the L.P. turbine. The H.P.-I.P. turbine and L.P. turbine shall each deliver power to a separate coupling in a reduction gear. The design shall provide for approximately (plus or minus 2 percent) equal power to the couplings at full power. L.P. turbine may be either single or double flow. For powers up to the specified cruising power, only the H.P. element shall receive inlet (chest) steam, with the I.P. element being supplied (in series) with steam from the H.P. element. At powers above the crusing power of operation inlet steam shall flow through the H.P. and I.P. elements (in parallel) in a manner similar to that in a double-flow turbine. Unless otherwise specified (see 6.2.2(b)), the H.P.-I.P. valve sequencing is not restricted. No row of blading shall be by-pass at any power.

3.5.6 Astern element.- Backing or reversing shall be accomplished by an astern element located in each exhaust end of the L.P. turbine casing or in the exhaust end of each single-casing turbine. Single-stage astern elements and the last stage of multi-stage astern elements shall have symmetrical arrangements of nozzles in upper and lower halves of casing, with total admission as nearly a full circle as practicable.

3.5.7 Foundations and supports.-

3.5.7.1 Methods of supports.- Turbines shall be supported by one or more of the following:

(a) Ship's foundation.
(b) A bedplate.
(c) A special box girder or frame.
(d) The main condenser.
(e) A step on the lower-half gear casing.

Downloaded from http://www.everyspec.com

If required: the girder for H.P. or H.P.-I.P. turbine will be furnished by shipbuilder who will forward drawings of the girder to the turbine manufacturer for comments, L.P. turbine girder or special frame will be furnished by the turbine manufacturer as a part of the L.P. casing or as a support for same; subbase for resiliently mounted propulsion unit will be furnished by the manufacturer of the reduction gear.

3.5.7.2 Mounting and bracing.- Turbines shall not be braced, restrained, or otherwise restricted, except by bolts or keys securing turbines to their foundations or supports.

3.5.7.3 Condenser support.- L.P. and single-casing turbines shall be located above and attached to the main condenser. Where a fore-and-aft condenser is used, the condenser will normally support the turbine. Where an athwartship condenser is used, the turbine will be supported by or support the condenser.

3.5.7.4 Expansion and flexibility.- H.P. and H.P.-I.P. turbines (and "free" ends of "single" flow L.P. and single-casing turbines not completely supported by the condenser) shall include those supports which are necessary to permit free longintudinal and radial casing expansion sufficient to allow for full power ahead and astern operating temperature.

3.5.7.5 Chocks.- Chocks required between turbines and foundation will be furnished by the shipbuilder to a design acceptable to the turbine maufacturer.

3.5.7.6 Securing turbine to ship's structure and systems.- Bolts and studs for securing turbines to ship's structure and external system connections will be furnished and installed by the shipbuilder. Holes in turbine flanges for such bolting shall be drilled by the turbine manufacturer, except that holes for fitted bolts will be finish-reamed by shipbuilder at installation.

3.6 Thermal insulation and lagging.- The shipbuilder will be reponsible for furnishing and installing thermal insulation and lagging. The turbine manufacturer shall advise the shipbuilder of maximum casing temperatures (including windage effects of astern and trail shaft operation). The shipbuilder will inform the turbine manufacturer of the requirements for lagging attachments on casing. Such attachments shall be furnished by the turbine manufacturer and, except for carbon steel casings, shall not involve welding after final heat treatment of the casings. The turbine manufacturer shall also advise the shipbuilder of any areas of insulation that should be shielded to prevent oil soaking with consequent risk of fire.

3.7 Instrumentation.- Turbine instrumentation and responsibility therefor shall be as specified hereinafter.

3.7.1 Pressure and temperature measurements (steam).- Pressure and temperature sensing locations shall be as indicated on figure 3. Pressure gages and thermometers will be furnished by the shipbuilder. Thermometer wells shall be furnished with the turbine and shall be in accordance with Drawing 810-1385917 except that wells for first stage and by-pass stages shall be of the flanged type in accordance with figure 4.

3.7.2 Pressure and temperature measurements (oil).- Pressure gages for the lubricating and control oil systems will be furnished by the shipbuilder and will be installed in the shipbuilders system. Thermometers for oil sight flows will be furnished by the shipbuilder; however, wells conforming to MIL-W-24270/1 shall be furnished by the turbine manufacturer and shall be installed in accordance with Drawing 810-1385917.

3.7.3 Hot-spot(s) temperature.- If the turbine manufacturer considers that the instrumentation required by figure 3 is not adequate for establishing limiting values necessary to safely operate the turbine during astern, windmilling or trailing shaft operation, he shall provide test instrumentation on one unit to determine the limits during either shop tests or sea trials.

3.7.4 Rotor position indicator.- Each turbine shall be fitted with a rotor position indicator (standard dial-type) at the thrust end, calibrated in not less than 1/8 inch increments of arc each corresponding to 0.001 inch rotor travel. A cover shall be provided to protect the indicator if it extends beyond casing and is susceptible to damage.

Downloaded from http://www.everyspec.com

3.7.5 Bearing RTE.- An RTE system shall be furnished (see 3.22.4).

3.7.6 Nozzle bowl pressure connection.- Nozzle bowl pressure connections are not required; however, if the turbine manufacturer does provide such connections, they shall either be blank flanged or plugged with a pipe plug which is seal welded.

3.8 Lubrication system.- The lubricating system external to turbine, is the responsibility of the shipbuilder. The responsibilities of the turbine manufacturer are as specified in 3.8.1 through 3.8.11.

3.8.1 Cleaning of systems.- All parts of the turbines which form a part of the internal lubricating oil system shall be thoroughly cleaned prior to the operating tests specified in 4.5.

3.8.2 Type of lubricating oil.- Turbines shall be designed for use with Navy symbol 2190 TEP lubricating oil conforming to MIL-L-17331.

3.8.3 Low L.O. alarm setting.- The turbine manufacturer shall advise the shipbuilder of the minimum acceptable lube oil pressure at bearing inlets for use in setting the low-pressure alarm (shipbuilder furnished).

3.8.4 Flow-limiting orifices.- Orifices shall be provided in the oil supply to each journal bearing and in the inlet to or discharge from each thrust bearing. Orifices may be of a design which permits removal but they shall be installed in such a manner as to prevent external adjustment of oil flow.

3.8.5 Test connections.- Test connections (for use of a pressure gage) are not required before each bearing. If such connections are provided for use during shop tests, they shall be plugged and seal welded prior to shipment.

3.8.6 Bearing oil supply and return.- Each turbine journal bearing and thrust bearing shall have separate oil connections and separate oil discharge connections, however, inlet and discharge for thrust bearing may be manifolded with those of adjacent journal bearing to permit a single oil supply connection and a single oil discharge connection to serve both bearings.

3.8.7 Sight Flows.- Each journal bearing cap and each thrust bearing cover or housing shall be fitted with a sight flow integral therewith or bolted thereto. Sight-flows shall provide visual indication of oil during standby, ahead and astern operation. Bolted-on fittings shall be bronze or steel and windows shall be shock-resistant glass or plastic (1/4 inch minimum thickness for flat windows and 5/32 inch minimum thickness for cylindrical windows). Provisions for thermometers shall be in accordance with 3.7.2.

3.8.8 Oil inlet temperature.- Turbines shall be capable of operation up to and including full power with inlet oil temperature of 90°F. Normally temperature will be approximately 120°F. and shall not exceed 130°F.

3.8.9 Oil discharge temperature.- The maximum temperature rise of the oil discharged from any turbine bearing under any operating condition shall not exceed 50°F. nor shall the temperature exceed 180°F. when measured by thermometers in the sight flows.

3.8.10 RTE temperature limits.- Maximum allowable temperature as read by RTE shall not exceed 250°F. for journal bearings and 270°F. for thrust bearing shoes. Alarm settings should initially be set at maximum limits, however, final alarm setting shall be 20°F. higher than the maximum value observed during trials.

3.8.11 Grease lubrication.- Where grease lubrication is required, design shall be such that satisfactory lubrication is obtained with grease conforming to MIL-L-15719. Commercially available grease of a type similar to that complying with the Government specifications may be used during shop tests. Grease fittings conforming to geometry of MS15003 shall be provided with the turbine.

3.9 Gland seal and leak-off (vent) systems.- Gland seal and gland vent connections shall be provided at each gland. Gland seal regulating valves shall be furnished with the turbine. The shipbuilder will furnish the seal and vent piping and vent fan with condenser.

Downloaded from http://www.everyspec.com

3.9.1 Gland seal regulators.- Two automatic regulating valves (with local manual override) shall be furnished - one for supplying steam to the turbine glands and one for unloading excess steam from the glands. These two valves may be separate regulators or incorporated in a common body. All regulating valve bodies shall be provided with take-down (bolted) inlet and outlet USAS flanges for the service intended. Regulating valves shall conform to the following as applicable (Note Air pilot-operated valves are not permitted on submarines).

(a) Automatic (pneumatic) - MIL-V-18030.
(b) Automatic (hydraulic) - As approved by NAVSEC.

3.9.2 Gland protection.- The regulating valves shall be designed to meet the following requirements:

(a) Supply valves shall fail open.
(b) Unloading valves may fail either open or closed depending upon the ability of the system to withstand the resultant pressure.

3.9.3 System design.- Regulating system shall be designed to maintain approximately 1/2 to 2 pound gage pressure in the shaft gland seal inlet cavity. A minimum of 5 inches of water will be maintained at the shaft gland leak-off cavity by the gland exhauster condenser furnished by the shipbuilder. The capacity of the gland seal system, the gland exhauster system and leak-off piping shall be based upon the turbine manufacturer's estimate of "Maximum clearance flows" (corresponding to clearances which require replacement of packing) calculated for 2 pounds per square inch gage (psig) pressure at the shaft gland seal inlet cavity and minimum of 5 incnes of water at the shaft gland leak-off cavity. Maximum flows shall be not less than 150 percent nor more than 200 percent of the flows corresponding to "normal clearance" (see 3.16.1). Where valves stem leak-off flows are involved, increased value of flow shall be based on the manufacturer's estimate of increased diametrical clearance between stem and bushing. Piping shall be sized to limit velocity of supply steam to a maximum 200 feet per second and vent steam to a maximum of 100 feet per second.

3.9.4 Excess steam.- Excess leak-off steam from turbine glands may be introduced into the crossover pipe or into stages of the same turbine by a re-entry line. Steam from low pressure valve stem leak-offs may be used to augment gland sealing steam. Discharge from the gland seal system unloading valve may be piped to the condenser (or lower-half exhaust casing of L.P. or single-casing turbines in such a manner as to least affect temperature measurement in turbines exhaust shell) or to a suitable turbine stage. In such cases, the admission of steam shall be arranged so that the rotating blades and shrouding are protected against direct impingement from the entering steam.

3.10 Control systems.- The control system as used herein represents the combined efforts of the shipbuilder and turbine manufacturer to provide means for translating operator effort into turbine response for ahead operation.

3.10.1 Type of system.- The control system shall be a mechanical type unless power-assist is required to meet handwheel torque limitations specified herein.

3.10.2 Power-assist.- Power-assist system may utilize hydraulic, pneumatic or electrical means to reduce operator effort, except that pneumatic control is not permitted in submarines. NAVSEC approval for the use of power assist and of the details of system proposed is required.

3.10.3 System component responsibility.-

3.10.3.1 Ahead control.- Nozzle control valves, by-pass valves, check valves, transfer valves and operating mechanism at turbine shall be furnished with the turbines. Extraction and induction valves, handwheels and connecting system to turbine control mechanism will be furnished by the shipbuilder.

3.10.3.2 Astern control.- Astern valve, handwheel, and connecting system will be furnished by the shipbuilder.

3.10.3.3 Power assist.- Responsibility for furnishing power assist system shall be based on which part of the control system fails to meet specified torque limitations.

3.10.4 Single handwheel.- Ahead control valves shall be controlled by a single handwheel. Handwheel rotation shall be such that valves close with clockwise motion when facing the handwheel.

Downloaded from http://www.everyspec.com

3.10.5 Ahead handwheel.-

3.10.5.1 Size.- The handwheel will be 24 inches in diameter.

3.10.5.2 Torque.- The maximum torque permitted (based on highest specified operating steam pressures at applicable valve cracking points) is as follows:

(a) For submarines.- Maximum peak torque in either opening or closing direction is 20-pound-feet (tangential pull of 20 pounds at wheel rim) of which a maximum of 12-pound-feet is allowed for system furnished with turbine and a maximum of 8 pound-feet is allowed for shipbuilder-furnished system.

(b) For surface ships.- Maximum peak torque in either opening or closing direction is 40 pound-feet (tangential pull of 40 pounds at wheel rim) of which a maximum of 30 pound-feet is allowed for system furnished with turbine and a maximum of 10-pound-feet is allowed for shipbuilder furnished system.

3.10.5.3 Number of turns.- Number of turns shall be as follows:

(a) For submarines.- Number of turns shall be not less than 10 nor more than 15.

(b) For surface ships.- Number of turns shall be not less than 10 nor more than 35.

3.10.6 Design details.-

3.10.6.1 Ahead nozzle control.- The number and size of the ahead nozzle control valves shall be such as to provide stable speed control over the entire operating range. Negative loops in the power flow curves between valve points are permitted but effects shall be minimized when they can not be avoided.

3.10.6.2 Ball and roller bearings.- Ball and roller bearings used in the control system shall be in accordance with either the applicable Government specifications or to commercial quality of standard catalogue types.

3.10.6.3 Strength of system (see 3.15.5).-

3.10.6.4 Self-locking.- For any given handwheel position, the valve position shall remain constant and not creep. External clamps or other friction devices to accomplish this are not permitted.

3.10.6.5 Keyed controls.- Cams and levers which transmit torque shall be keyed or doweled to their respective shafts. Dowels shall be locked in.

3.10.6.6 Springs.- Design shall be such that valves are spring-loaded in the closing direction.

3.10.7 Overspeed protection.- Speed-limiting and overspeed trip devices shall be furnished for turbines driving generators and for turbines driving through clutches. Speed sensing elements shall be on one rotor of each propulsion unit in a multi-shaft ship and on all rotors of a single-shaft ship.

3.10.7.1 Control oil.- Control oil for actuating speed limiting and overspeed trip mechanisms will be available from shipbuilder-furnished pumps. Control oil will be 2190 TEP at a pressure specified (see 6.2.2(j)).

3.10.7.2 Speed-limiter.- The speed-limiting device shall be a self-restoring type which hydraulically actuates ahead control valves and astern valve to limit speed (upon loss of load at any ahead and astern power) to approximately 110 percent of full power rpm. The actuating point shall be such as to permit operation at highest expected revolutions per minute (rpm) due to propeller miss (see 3.12.2).

3.10.7.2.1 Speed sensing impeller.- Speed sensing for the speed-limiting device shall be by the use of a removable pump impeller attached to the end of the rotor, or a separate oil pump driven by rotor. Provision shall be made for a pressure gage (shipbuilder furnished) to measure discharge pressure.

Downloaded from http://www.everyspec.com

3.10.7.3 Overspeed trip.- Overspeed trip shall be as follows:

(a) The overspeed trip device shall consist of a mechanical speed sensing element which hydraulically shuts-off ahead and astern steam to fully stop turbine rotation. Where there is no shipbuilder-furnished valve in the steam line for this purpose, the trip shall shut the ahead control valves and astern valve to full closed position.
(b) The trip system shall be capable of limiting speed (upon loss of load at any ahead or astern power) to an rpm which will not result in damage to the turbine. (Minor rubs of packing and seals are permitted.)
(c) The speed sensing element shall be removable from the rotor and provisions shall be made for adjusting tripping point.
(d) The actuating point shall be above the maximum rpm resulting from operation of the speed limiter.
(e) A local manual trip and reset shall be provided. The manual trip device may also function due to loss of oil but shall be self-restoring upon return of oil.

3.10.7.4 Operational checks.- Provision shall be made to test the speed-limiting system at or less than full power rpm. Test of the overspeed trip shall be at overspeed rpm, with provision made to control maximum rpm attainable by use of either the speed limiting device or other special features. Provision will be made on the reduction gear for the use of a hand tachometer to check rpm.

3.10.7.5 Override feature.- Where either overspeed protection or power assist is furnished, the design shall provide for operation of ahead and astern valves upon loss of control oil or component failures in the power-assist or overspeed system. For submarine turbines, override capability shall be possible without requiring any action by the throttleman other than further opening of the handwheel. For surface ships, local manual control or other means to restore operational capability is acceptable. In override condition, the torque required to operate ahead or astern handwheels shall not exceed 50 pound-feet and number of turns from normal full closed to full open in override shall not exceed 50.

3.10.8 Control of turbines driving generators.- Control system shall provide for manual control of speed during start-up and automatic control of speed during load operation. Speed regulation shall be as specified in the contract. For alternating current (ac) generators the use of one or more levers for combined steam and electrical control will be considered.

3.10.8.1 Overspeed protection.- In addition to the requirements of 3.10.7, the following shall apply:

(a) Speed sensing element.- A centrifugal type fly-weight arrangement connected to rotor either directly or through a geared mechanism is acceptable.
(b) Trip throttle valve.- The overspeed trip shall actuate a trip throttle valve which shall be supplied with the turbine. A local manual trip and reset shall be provided. When resetting, it shall be necessary to manually close the handwheel to within one or two turns of full-closed position. It shall also be possible to reset the throttle valve when turbine rotation has lowered to approximately 50 percent full power rpm and thus not be necessary to wait until rotor has fully stopped.

3.10.9 Control for singled-up condition.- Special orifices, blank flanges and piping from H.P. exhaust shall be furnished with the turbines and shall be permanently installed. The use of spectacle flanges is desired when shock considerations permit their use. Steam piping from strainer to L.P. inlet, singled-up control valve and desuperheater (if required) will be furnished by the shipbuilder. Desuperheater design shall be reviewed and commented on by the turbine manufacturer and be approved by NAVSEC. The shipbuilder will also provide blank flanges in H.P. inlet, lube oil system and gland seal system to permit isolation of the H.P. turbine for repairs while operating on L.P. turbine.

3.11 Piping, valves and associated equipment.-

3.11.1 General requirements.- Main steam inlet piping furnished with the turbines shall be in accordance with MIL-STD-777 (surface ships) or MIL-STD-438 (submarines) as applicable and section 9480-0 of the General Specifications for Ships of the United States Navy for design (sizing, wall thickness, flexibility and cold springing) and tests. Spiral wound gaskets may be of the inner and outer ring type. Other piping

Downloaded from http://www.everyspec.com

furnished with the turbines shall be to ASTM standards with allowable stresses, flange rating and geometry as outlined in the applicable USAS standards. Piping shall be seamless except where such is not commercially available for large sizes. Gaskets to commercial standards are acceptable except that joint design shall be such that replacement with gaskets to Government specifications is satisfactory.

3.11.2 Connections to Shipbuilding systems.-

3.11.2.1 Allowable reactions.- Steam and oil connections at turbine shall be such that unacceptable strains are not imposed on turbine by shipbuilders piping. Data on allowable force and moment reactions which turbine can safely withstand shall be forwarded to the shipbuilder. Shipbuilder piping reactions will be submitted to the turbine manufacturer for review and comment.

3.11.2.2 Flanged connections.- All steam piping connections to which shipbuilder connects shall be flanged and shall terminate at a point outside of turbine lagging line. Male-female flanges (conforming to USAS standards) shall be used for all inlet oil lines and mating flange (of a material comparable with turbine flange) furnished with the turbine. Bolting and gaskets will be shipbuilder furnished.

3.11.3 Crossover pipe.- Crossover pipes and bolting for same shall be furnished with the turbines but will be fitted and installed by the shipbuilder. The crossover pipe shall be furnished either assembled (with flanges unfaced and undrilled) or unassembled (with flanges faced and drilled, and provisions for field weld by the shipbuilder) as desired by the shipbuilder. Expansion joints, in accordance with MIL-E-17813, shall be included with crossover pipe when required to accommodate thermal expansion.

3.11.4 Main steam strainer.- For geared propulsion units, the main steam strainer will be furnished by the shipbuilder and will be located upstream of ahead and astern valves. For turbine-generator propulsion units, a steam strainer in accordance with MIL-S-21427 shall be furnished with the trip throttle valve.

3.11.5 Moisture separator.- One external moisture separator shall be provided ahead of the L.P. turbine inlet for each cross-compound propulsion unit operating on saturated or wet inlet steam. Unless otherwise approved, the separator shall contain or be provided with a strainer on the downstream side. Design shall be as approved by NAVSEC. Internal separating elements shall be of 12 chrome material or equivalent; outer casing may be of carbon or alloy steel.

3.11.6 Sentinel valves.- Sentinel valves (1/2 inch size and type I of MIL-V-20065) shall be provided by the turbine manufacturer on crossover pipes and on the exhaust annulus of L.P. and single casing turbines in surface ships. Sentinel valves do not require water sealing. The discharge of each sentinel valve shall be visible to operating personnel and shall be shielded or directed so as to avoid injury to personnel. Piping from sentinel valves shall not be discharged to bilge or drain system. Set points shall be 5 psig for exhaust and 10 percent above expected maximum operating pressure for crossover pipes.

3.11.7 Ahead control valves.-

3.11.7.1 Material.- Materials shall be in accordance with figure 2. The body for the trip throttle valve, transfer valve or other separate valves furnished with turbine shall be of similar material as specified for the steam chest or casing for comparable operating conditions.

3.11.7.2 Seats.- Valve seats shall be removable from the valve body or steam chest. Threaded connections are not permitted. Provision shall be made for expansion between seat and body or chest. Seats shall be installed with a light interference fit and annulus between valve seat and body or chest shall be seal welded to prevent leakage. For saturated steam applications, expansion lips or rings used for absorbing expansion between seat and body shall be constructed of nickel-chromium-iron alloy.

3.11.7.3 Contact area (disc and seat).- The contact area of disc and seat shall be hard-faced with chrome-cobalt material to a minimum thickness of 3/32 inch and an approximate width of 1/2 inch.

3.11.7.4 Stems and bushings.- Soft packing shall not be used. Stems and bushings shall be nitrided or otherwise suitably hardened.

Downloaded from http://www.everyspec.com

3.11.7.5 Poppet valves.-

3.11.7.5.1 Lift-bar.- The lift-bar may be either solid or split. If split, the halves shall be aligned by two straight dowel pins or fitted bolts, and countersunk bolts shall be installed between each stem hole. All dowels and bolts shall be staked.

3.11.7.5.2 Button heads.- Valve button heads may be either integral with stem or attached to stem by screw threads and shall have a spherical seating surface. (Exception to this will be considered when there is operating experience to indicate other shapes are satisfactory.) Removable button heads shall be locked to their stems in a manner approved by NAVSEC. Welding to stem will not be permitted.

3.11.7.5.3 Contact area.- Lift-bar seat (or seat insert if used) and button head contact surface shall be either hard-faced with chrome-cobalt or be hardened to a minimum hardness of 200 BHN and stress-relieved.

3.11.7.6 Springs.- Valve gear springs shall be cadmium-plated or otherwise corrosion protected. Ends shall be closed and ground flat and square. Nesting is permitted if necessary to obtain the desired characteristics, however, no compression forces shall be present in springs prior to removal of last retaining bolt or securing device.

3.12 Operating conditions.- Operation of the propulsion units will be limited to design shaft horsepower, design shaft torque or design propeller rpm whichever occurs first.

3.12.1 Ahead full power - Design full power is the maximum power for which each propulsion unit shall be designed. Extra capacity beyond the manufacturer's normal margin is not required.

3 12.2 Ahead full power rpm.- Each propulsion unit shall be designed for continuous operation when developing full power at nominal full power rpm (see 6.2.2(i)), plus or minus 3-1/2 percent for surface ships and plus or minus 5 percent for submarines. Guaranteed steam rate shall be based on the nominal full power rpm.

3.12.3 Hull fouling.- Propulsion units shall be designed to provide for changes in the ships speed/power curve due to hull fouling. Full power torque will not be exceeded, however, design shall provide for a 50 percent increase over specified partial load torques for clean hull condition. This requirement assumes a 5 year interval between hull cleaning with a 10 percent torque increase per year.

3.12.4 Steam rates.- Specified steam rates (see 6.2.2(i)) are those which shall be guaranteed to exist after maneuvering (including crash ahead and crash astern) during a laboratory test conducted in accordance with ASME power test code, and shall include the amount of steam used for gland sealing from all sources. The amount of gland steam supplied from the gland seal regulator shall be based on a prorated available-energy basis on the assumption that it is supplied from the main steam line but assuming dry-and-saturated quality. Steam rates over the entire power range shall be the minimum obtainable consistent with the design selected to meet the steam rates specified at particular powers.

3.12.5 Astern operation -

3.12.5.1 Stopping capability.- To provide adequate stopping ability for the ship, astern elements shall be capable of developing at a specified shaft speed (rpm) a minimum astern torque with a corresponding maximum steam flow both as specified (see 6.2.2(i)), table VI, note 1).

3.12.5.2 Astern full power - Each propulsion unit shall be capable of continuous astern operation without cooling sprays at full power astern or rated propeller rpm whichever occurs first. For submarines, astern full power shall be based on surface operation and rated astern rpm is 50 percent of full power ahead rpm.

3.12.6 Manuevering.-

3.12.6.1 After operation astern at any power up to and including full power for any period of time, the turbines shall be capable of being immediately stopped or reversed and operated for any period of time at any ahead power up to and including full power. Conversely, the above shall apply in going from ahead operation to astern operation. Warmed-up (dockside) turbines shall be capable of going immediately from a stopped

Downloaded from http://www.everyspec.com

condition to either full power ahead or full power astern without damage as the result of differential expansion of stationary and rotating parts within the turbines.

3.12.6.2 During and immediately after quick reversals astern, the turbine shall be capable of operating up to an astern propeller speed equal to full power ahead propeller speed, or the astern propeller speed corresponding to rated astern bowl pressure, whichever occurs first, for periods not to exceed 5 minutes.

3.12.7 Emergency operating conditions.-

3.12.7.1 Singled-up operation.- For single shaft ships with cross-compound propulsion units or two type I turbines connected to one gear, provision shall be made to operate either turbine independently under design terminal conditions. Desuperheating will be permitted for L.P. turbines when either special materials or increased clearance would otherwise be required. Desuperheater may be combined with main steam strainer. The operating turbine shall be capable of operating at any rpm up to the point where its normal full power torque is developed. A maximum of 500 hours under this mode of operation may be used for design purposes. (Note: Use of carbon steel at elevated temperatures is permitted when design stress levels are satisfactory). See 3.10.9 for requirements on control and parts to be furnished.

3.12.7.1.1 Disconnecting damaged turbine.- Provision for disconnecting the damaged turbine from the gear will be the responsibility of the gear manufacturer; however, the turbine manufacturer shall provide a rotor locking device to prevent rotation of the rotor due to gland seal steam or inertia forces. A torque corresponding to 5 percent of the turbines ahead full power torque shall be used as the criterion for the design of the rotor locking device.

3.12.7.2 Windmilling operation.- Where two type I turbines are connected to one reduction gear, each turbine shall be capable of being windmilled (rotating without steam being admitted) at a minimum of 40 percent of rated ahead and astern rpm with atmospheric pressure in the condenser. Cooling sprays to limit temperatures under this mode of operation are permitted, however, design shall be submitted to NAVSEC for approval. Manual shall also provide information on allowable rpm with vacuum.

3.12.7.3 Trailing-shaft operation.- Each propulsion unit shall be capable of being trailed, i.e., rotating without steam flow due to other shaft(s) operating or ship being towed. This mode of operation will be limited to the maximum rpm recommended by the turbine manufacturer to protect the turbine(s) from overheating. The manual shall contain limits for trailing shaft with and without vacuum.

3.12.7.4 Locked shaft operation.- Each propulsion unit installed in a multi-shaft ship shall be capable of driving its propeller at any rpm up to the point where its normal full power torque is developed when one shaft is either locked or being trailed. For carriers, design shall permit operation with two and three shafts either locked or being trailed; however, the turbine manufacturer may impose restrictions on rpm range to be avoided as long as each propulsion unit can be operated at its full power torque capability. Restrictions imposed are subject to NAVSHIPS approval.

3.12.8 Terminal steam conditions.- Nominal inlet steam conditions and exhaust pressure for ahead and astern operation will be specified in 6.2.2(i). Ahead inlet conditions are at the turbine chest, astern inlet conditions are at the shipbuilder's connection to the astern bowl pipe downstream of the astern valve. Exhaust pressures are at the turbine exhaust flange. Specified performance shall be based on nominal conditions, however, design shall be such that continuous operation, within the specified powers and speeds, is not limited by the variations specified in 3.12.8.1 through 3.12.8.3 in terminal conditions.

3.12.8.1 Inlet pressure variations.- For any given load, the steam pressure will not average more than that specified. In maintaining this average, the pressure will not exceed 110 percent of that specified. During abnormal conditions, the pressure may swing momentarily to 120 percent of that specified, but the aggregate of such swings will not exceed 1 percent of the total specified operating life.

3.12.8.2 Inlet temperature variations.- For any given load, the steam temperature will not average more than that specified. In maintaining this average, the temperature will not exceed the specified temperature plus 15°F, except that during abnormal conditions, the temperature will not exceed: (a) the specified temperature plus 25°F. for not more than 5 percent of the total specified operating life, or (b) the specified temperature plus 50°F. for swings of 15 minutes duration or less, aggregating not more than 1 percent of the total specified operating life.

Downloaded from http://www.everyspec.com

3.12.8.3 Exhaust pressure variations.- Design exhaust pressure is based on an injection temperature of 65°F. for submarines and 75°F. for surface ships. Variations in exhaust pressure shall be based on injection temperature from 28°F. to 95°F. and will be specified (see 6.2.2, table VI, note 3).

3.12.9 Trim, list, roll and pitch.- Turbines shall be designed to operate satisfactorily when the ship is in other than a normal condition, as shown in table I (trim and list or roll and pitch can occur simultaneously).

Table I - Ship's trim, list, roll and pitch

Condition	Surface ships	Submarines
	Degrees	Degrees
Permanent trim (down, bow or stern)	5	30
Permanent list (port or starboard)	15	15
Roll (port or starboard from normal)[1/]	45	60
Pitch (up or down from normal)[1/]	10	10

[1/] Pitch and roll time cycle, if required shall be as specified (see 6.2.2(o)).

Downloaded from http://www.everyspec.com

3.13 Shock. Propulsion turbines are grade A hull mounted equipment as defined by MIL-S-901. Degradation of performance after the turbines have experienced shock loads shall not exceed 5 percent, i.e., with design steam flow, the propulsion unit shall be capable of producing at least 95 percent of design full power. Unless otherwise specified (see 6.2.2(g)), the basis for shock design and acceptance shall be as specified hereinafter.

3.13.1 Static design method.- Shock design of the propulsion unit shall be based on the following minimum "g-load" values.

Application	Static g-load values		
	Vertical	Athwartships	Fore and aft
Surface ships	75	45	20
Submarines	75	75	20

3.13.1.1 Use of "g-load" values.- The propulsion unit shall be capable of withstanding shock loads due to steady acceleration at the static "g-load" values applied separately in each direction (plus or minus). Each mass element of the unit shall have an inertia load applied equal to (dm X G X g), where:

dm = distributed mass
G = static g-load value tabulated above
g = acceleration of gravity

The resulting stresses and deflections, when added to maximum normal operating values, shall not exceed allowable stresses or deflections.

3.13.1.2 Allowable stresses.- The combination of shock and operating stresses shall not exceed the 0.2 percent offset yield strength at operating temperature unless otherwise approved by NAVSEC. The unit loading for combined shock and operating loads on babbitted bearings shall be limited to 22,000 psi. The criteria for failure when plastic set is permissible is the effective yield strength of the material; in tension and shear, this is represented by σ and τ, respectively, which are defined as:

$$\sigma = \sigma y + F(\sigma u - \sigma y)$$
$$\tau = 0.6\sigma$$

Where: σy is the 0.2 percent offset yield, elastic limit or other normal definition of material yield strength.
σu is the normal definition of material failure strength.
F is a factor which takes into account the efficiency with which the material in the member is utilized and is dependent on the kind of loading and cross section of the member. The value of F is equal to [(that load required to completely yield the member divided by that load required just initiate yielding) -1]. F equals 0 for members in tension and where material has less than 10 percent elongation before fracture in a tension test; F equals 0.5 for a rectangular section in pure bending.

3.13.2 Exceptions.- The above basis for shock design applies except in the following cases:

(a) When the turbine proposed is of identical design to one that has been previously shock tested and finally accepted by the Navy, such design shall be acceptable if it meets all other requirements for the proposed application.

(b) When the turbine proposed is of an identical design to one that has been previously dynamically analyzed and has been accepted by the Navy, such design shall be acceptable if:
(1) The mathematical model applies without change, i.e., the equipment involved is a repeat procurement for which the foundations and other equipment affecting the model are the same.
(2) The turbine meets all other requirements of the purchase specifications.

Downloaded from http://www.everyspec.com

(c) When the turbine proposed is similar, but not identical, to a design previously tested or dynamically analyzed and accepted by the Navy, the turbine manufacturer may define the areas of dissimilarity, including calculated "g-load" capability in these areas, and propose to the Navy the acceptance of such design in lieu of the requirement in 3.13.1. If NAVSHIPS/NAVSEC concurs that the similar design will provide equal or better shock capabilities in the intended application extension approval will be given.

(d) Gland seal regulators, sentinel valves and other valves such as a transfer valve for HP-IP turbine shall be shock tested in accordance with MIL-S-901. Other associated parts or subassemblies may be shock tested at the manufacturer's option.

3.13.3 Stress report.- A stress summary report shall be submitted to NAVSEC for information. Report shall cover all areas for which shock stresses were calculated and shall indicate the applicable yield strength for each stress reported.

3.13.4 Shock test.- When specified (see 6.2.2(p)), shock tests on a floating shock platform shall be conducted in accordance with the procedure specified in MIL-S-901. The purpose of the test is to validate the design criteria of 3.13.1. It is intended that a test will be included when sufficient lead time is available to meet required delivery dates. The contractor shall be responsible for all arrangements and cost related to the conduct of the test; liability for damage resulting from the test is limited to corrective actions (shock hardening of all units under the contract) resulting from failure to conform to 3.13.1 and refurbishing the test unit to meet its intended use. A report of the test results including recommendations for any design changes, if applicable, shall be submitted to NAVSEC for appropriate action. Design changes will be incorporated at the option and expense of the government.

3.13.5 Dynamic analysis.- When specified (see 6.2.2(g)), the manufacturer shall conduct a concurrent dynamic analysis. Items found deficient by the analysis shall be identified and corrective actions proposed. Design changes will be incorporated at the option and expense of the government.

3.14 Mechanical vibration and balancing.-

3.14.1 Allowable vibration.- Unless special noise levels are specified (see 6.2.2 (o)), the maximum allowable levels of forced vibration shall be as shown on figure 5.

3.14.2 Shop balance.- Rotors shall be dynamically balanced with all rotating parts installed. Balancing shall be conducted at the maximum safe operating speed of the balancing machine or rated speed of the turbine whichever occurs first.

3.14.3 Special balance.- When contract requires special efforts to obtain noise reduction, maximum efforts shall be made in the production phase to minimize the amount of corrections required during either spin testing or load balancing.

3.14.4 In-field balance.- Provision shall be made for in-field balancing each rotor without lifting the casing.

3.14.4.1 Correction planes.- A minimum of two correction planes shall be provided for each rotor, except, that where special noise levels have been specified (see 6.2.2 (o)), a minimum of three correction planes are required for rotors of Type I turbines and of L.P. turbines. In-field balance holes or grooves shall not be used during balancing of the rotor in the balancing machine, however, a maximum of 3 distributed weights in each plane may be used to refine balance during shop spin tests.

3.14.4.2 Access to correction planes.- Access to correction planes shall be through either existing inspection openings, outer removable gland covers or special flanged access holes. Minimum effort to install weights is desired.

3.14.4.3 Balance weights.- Balance weights shall be either threaded weights for tapped holes or weights secured in dovetail grooves. Provision shall be made to mechanically lock-in the weights.

Downloaded from http://www.everyspec.com

3.14.4.4 Phase angle measurement.- Provision shall be made for taking phase angle measurements during balancing. Special parts for so doing are not required to be furnished.

3.14.5 Torsional vibration.- The turbine manufacturer shall submit to the shipbuilder information necessary to enable him to prepare and submit the torsional vibration characteristics of the system composed of the propeller, line shafting, gear and turbines. In the case of a turbine-generator unit for electric-drive ships, the turbine manufacturer shall prepare and submit for information the torsional characteristics of the T-G-Set.

3.14.6 Lateral and longitudinal vibrations.- Shipbuilder will be responsible for conducting the calculations of lateral and longitudinal vibration characteristics; however, turbine manufacturer shall, upon request, furnish such turbine data as is necessary for the shipbuilder to conduct the study.

3.14.7 Resonances.- Turbine components and support structures furnished by the turbine manufacturer shall take into account resonance resulting from ship environmental forces generated by propeller blade excitations ranging in frequencies from 0 to maximum blade rate. Shop testing to demonstrate that unacceptable resonances do not exist is not required, however, the turbine manufacturer shall be responsible for corrective action, if necessary, to eliminate unacceptable responses of turbine furnished parts where cause is not attributable to foundation or hull resonances.

3.14.8 Airborne noise.- Airborne noise tests are not required during shop testing and if conducted onboard ship, will be the responsibility of the shipbuilder.

3.15 Stress criteria and allowable stresses.-

3.15.1 Stress criteria.- Maximum allowable stresses for the specified operating conditions (see 3.12) shall be based on whichever of the following is limiting. Centrifugal stresses shall be based on the highest rpm specified (see 3.12.2).

(a) Yield strength (at maximum temperature with offset of applicable material specification).
(b) Stress rupture (minimum of 40,000 hours).
(c) Creep (0.1 percent) for life specified (see 3.3.5) where temperature exceeds 800°F. (Creep is not applicable to specified factors of safety.)

3.15.2 Blading.- Centrifugal stress (centrifugal load divided by full cross-section area) in the most highly-stressed row shall not exceed stress levels corresponding to a minimum factor of safety of two. Vibratory stress data (see figure 14) which includes the effects of specified hull fouling shall be submitted to NAVSEC for approval. The manufacturer's acceptance criteria shall also be submitted.

3.15.3 Bolting.- Turbine casing and steam chest bolting shall be designed to provide leak-tight joints for an initial period (following casing assembly) of at least 20,000 hours and, after retightening, for an additional period of 20,000 to 30,000 hours before again retightening based on relaxation strength of the material at maximum temperature involved.

3.15.4 Rotors.- Design primary stresses shall not exceed stress levels corresponding to the following minimum factors of safety:

(a) Centrifugal - 2.0
(b) Average tangential - 2.5
(c) Torsional - 5.0

3.15.5 Valve control system (ahead).- The control system furnished with the turbines shall be designed to withstand (without permanent deformation of any part) stresses equivalent to at least 150 pound force applied on the handwheels at any point throughout the operating range in both opening and closing direction. For cam operated valves, this requirement does not apply in the opening direction for the part of the system between cam and valves. Full-open and full-closed stops are permitted.

3.15.6 All other turbine parts.- All other turbine parts subjected to stress shall be designed to provide appropriate factors of safety based on the turbine manufacturer's experience.

Downloaded from http://www.everyspec.com

3.16 Clearance requirements.- Design clearances shall be adequate to prevent rubbing between stationary and moving parts during all specified operating conditions (see 3.12) except that minor contact of packing rings with rotor is acceptable.

3.16.1 Packing (diaphragm, gland and dummy) clearances.- Radial clearances between packing rings and shaft shall (at installation) be not less than either 0.005 inch (tolerance included) or the clearance corresponding to 80 percent of "normal clearance" (clearance expected to exist after preliminary acceptance trials) whichever is larger

3.16.2 Clearance measurement and adjustment.- Provision shall be made to measure and adjust the axial position of each rotor, however, such adjustment shall not be possible when turbine is rotating.

3.17 Welding and brazing.- Welding and brazing shall be in accordance with 3.17.1 through 3.17.6.

3.17.1 Qualification of production and repair welding and brazing procedures.- There shall be a written procedure qualified in accordance with ASME Code section IX for all welding and brazing performed by the turbine manufacturer and sub-contractors involved. The procedures shall be submitted to NAVSEC for approval, once approved, they do not require reapproval unless the essential elements (as listed in ASME Code, Section IX) are changed.

3.17.2 Qualification of personnel performing welding and brazing.- Each operator, before being permitted to perform any welding or brazing, shall be qualified for the process to be used in accordance with ASME Code, Section IX.

3.17.3 Joint design.- Full penetration welds shall be used for (a) all main steam piping, (b) all piping where operating pressure is 300 psi or greater and (c) all fabrications where operating pressure is 300 psi or greater.

3.17.4 Electrodes.- Electrodes shall be to either the applicable military specification or to commercial/industry specifications where the manufacturer maintains an in-plant verification system to ensure correct material is being used.

3.17.5 Post-weld heat treatment.- Written procedures are required for post-weld heat treatment and shall contain at least the following·

(a) Furnace loading instructions.
(b) Recording and controlling pyrometric equipment.
(c) The use and number of thermocouples.
(d) Local heating operations (if applicable).

Furnace control thermocouples may be used in lieu of thermocouples attached to the components when a recording pyrometric control furnace has been calibrated and it has been verified that the temperature variations within the furnace do not exceed 75°F.

3.17.6 Repair welding of castings.- Repair welding of castings using approved procedures is permitted. Records shall be kept of all repairs made to castings for H.P. casings, steam chest, astern steam casing and ahead and astern nozzle chambers when separate from casing. Records shall be retained for at least 7 years.

3.18 Marking of parts - The use of low stress die stamps for marking on low stressed surfaces is permitted, however, depth of penetration shall not exceed 0 020 inch except for radiographic location markings on castings which may be 1/32 inch in accordance with MIL-STD-271.

3.19 Threaded fasteners.- Threaded fasteners shall conform to the specifications listed on figure 2 for the applications indicated and as specified in 3.19.1 through 3.19.1.4. The various types of screw threaded fasteners shall conform to USAS standards. Threaded fasteners for all steam joints shall be installed using an anti-seize compound which is compatible with the base materials involved.

3.19.1 Screw threads.-

3.19.1.1 Unified thread series.- Screw threads, except as specified in 3.19.2.3, shall be of the unified thread series in accordance with Handbook H28.

Downloaded from http://www.everyspec.com

3.19.1.2 Coarse versus fine thread series.- The coarse thread series shall be used unless the component design indicates a necessity for the use of the fine thread series.

3.19.1.3 Eight-thread series.- For fasteners 1-inch diameter and larger, the eight-thread series shall be used wherever practicable.

3.19.1.4 Preferred thread-series.- In the selection of special threads, preference shall be given to the use of the 20, 28, 36, 44 and 56 thread series.

3.19.2 Class of fit.-

3.19.2.1 Class 2A-2B.- Class 2A-2B fit shall be used for the major portion of interchangeable screw thread fasteners.

3.19.2.2 Class 3A-3B.- Class 3A-3B fit shall be limited to applications where the necessity for accuracy of lead and angle of thread can be justified.

3.19.2.3 Class 5.- Class 5 interference fits when used shall conform to USAS B1.12.

3.19.3 General rules for applications.-

3.19.3.1 Regular versus heavy series.- Where necessary for purposes of bearing loads, pressure tight flanges and other special applications, heavy series shall be used for 1 inch size and larger.

3.19.3.2 Thread engagement.- Thread engagement for studs and cap screws shall be not less than the nominal diameter. Threads of nuts shall be fully engaged. The maximum protrusion of the fastener from the face of the nut shall not exceed approximately 1/2 of the nominal thickness of the nut.

3.19.3.3 Tapped holes.- Tapped holes for stud-bolts and cap screws shall be bottom tapped if the thickness of the remaining material is equal to or less than major diameter of the thread and in such instances they shall have full threads for the specified depth.

3.19.3.4 Fitted (body-bound) fastening.- Bolts stressed in shear shall be fitted. Holes for body-bound fastenings shall be reamed with coupled parts in position, to dimensions that will assure a tight fit. Tolerances in table II shall be used for body-bound bolts.

Downloaded from http://www.everyspec.com

Table II - Tolerances for body-bound fastenings

Nominal bolt size (inches)	Tolerances in inches		
	Maximum clearance-body of bolt and hole (Plus)	Diameter of hole (Plus)	Body of bolt (Minus)
1/4 to 3/8, incl.	0.0015	0.0009	0.0006
7/16 to 11/16	.0017	.0010	.0007
3/4 to 1- 1/8	.0020	.0012	.0008
1-1/4 to 1- 7/8	.0026	.0016	.0010
2 to 3	.0030	.0018	.0012
3-1/4 to 4- 3/4	.0036	.0022	.0014
5 to 7, incl.	.0041	.0025	.0016

3.19.3.5 Locking devices.- Nuts on moving parts, internal parts directly exposed to blade path, control mechanisms, and support structures shall be securely locked by lock washers or other means as approved by NAVSEC. Self-locking nuts conforming to MIL-N-24129 or MIL-N-25027 may be used. Locking wire shall not be used for securing nuts.

3.19.3.6 Internal bolting.- The use of internal bolts and studs in way of steam path shall be avoided to the maximum extent practicable without unduly complicating the design. Where internal bolting must be removed to lift casing, a warning plate so stating shall be permanently attached to the casing and shall protrude beyond lagging.

3.19.3.7 Acceptable types of fasteners.- Threaded fasteners shall be through bolts or studs, stud bolts (one nut) or tap bolts; however, tap bolts shall not be used for the following:

(a) Steam chest cover.
(b) Horizontal joints of HP, HP-IP and type I turbines.
(c) Astern steam rings or inner casings.

Studs shall be either a class 5 fit or be bottomed; however, details of bottoming shall be approved by NAVSEC. Where bottoming of stud bolts occurs, the thread fit shall be class 2A or 3A; class 5 interference fits shall not be bottomed.

3.19.3.8 Bolt heating.- Highly stressed studs 2 inches in diameter and larger in non-gasketed steam joints (such as casing joints and steam chest cover-joint) shall be drilled to permit the use of bolt heaters to obtain required stud extension without undue slugging and overtorquing. The corresponding cover nuts shall also be drilled to permit the use of extensiometers to determine stud extension.

Downloaded from http://www.everyspec.com

3.19.3.9 Bolt heaters.- Electrical bolt heaters and extensiometers shall be furnished for submarine machinery. Cable assembly shall be grounded. For surface ships, gas heaters may be used in lieu of electric heaters. Bolt heaters shall be designed with sufficient thermal capacity (based upon 15 minutes heating time per bolt) to produce required bolt extensions.

3.19.3.10 Stud removal.- An internal socket-head machined in end of stud or square end (or hex end) shall be provided to facilitate removal of one-nut studs 1 inch in diameter or larger where used in non-gasketed steam joints. At the manufacturer's option, stud removers (collet-type) may be furnished in lieu of the internal socket-head recess or external wrenching flats on end of one-nut studs.

3.19.4 Torque.- For critical applications such as steam joints and support structures, the threaded fasteners shall be tightened to specified tension by either elongation measurement or measuring flats. The turbine manufacturer shall establish these requirements and shall control adherence thereto during manufacture.

3.19.5 Pins and dowels.- Tapered pins and dowels shall be secured from backing out by staking or other locking devices; welding is permitted where the dowel or pin becomes a permanent part of the removable piece. Dowels and pins shall be provided with means of removal such as tapped holes, external wrenching or pulling heads, or shouldered shanks.

3.20 Casings and steam chests.-

3.20.1 Materials.- Casings and steam chests, shall be of materials specified on figure 2. Piston rings used to accommodate thermal expansion may be of cast iron.

3.20.2 Steam chest.- The steam chest shall be integral with the turbine casing. Steam inlet pipe shall be attached to the side or end of chest and not interfere with removal of steam chest cover. The joint between steam chest cover and chest shall be metal-to-metal and shall be made-up in the same manner as the casing horizontal joint except that copaltite will not be approved as a sealing compound.

3.20.3 Construction.- Casings and steam chests construction may be cast, fabricated or combinations thereof.

3.20.4 Horizontal joint.- All casings shall be divided at the horizontal centerline.

3.20.4.1 Access for wrenching.- Sufficient clearance shall be provided around bolt heads and nuts to permit use of standard tools; however, where joint integrity would be compromised, the use of special tools (to be furnished with the turbine) to accommodate closer bolt spacing is acceptable.

3.20.4.2 Joint surface.- Flange faces shall be finished to parallel surfaces with a surface finish of 63 RHR or better. The sealing surface of each flange shall be a horizontal plane with no discontinuities or steps along the flange except at junction of vertical joints.

3.20.4.3 Flange chamfer.- Joint surfaces in way of flange bolts on studs shall be chamfered or counterbored.

3.20.4.4 Making-up joint.- Joints shall be made-up metal-to-metal at room temperature; however, flange faces may be coated with either a thin coating of bodied linseed oil, or other commercially available sealing compounds. Procedure and compounds to be used require NAVSEC approval.

3.20.4.5 Pumping grooves.- Flange pumping grooves shall not be provided.

3.20.5 Bearing housings.- If the bearing housings are separate from casing, a centering shoulder, spigot, radial keys, radial dowels or equivalent means shall be provided at the joint between housing and casing. The space provided between bearing and glands shall be adequate to prevent leakage oil from entering the glands and gland steam blow from entering the bearings. Drain pockets and cavities between bearing and gland shall be avoided, so as to reduce the possibility of contamination of oil and condensate systems due to flooding of an improperly-drained pocket. When the use of a pocket is

Downloaded from http://www.everyspec.com

unavoidable, the cavity shall be as deep as possible with maximum volume and shall be drained by a one-inch diameter (minimum) drain (or equivalent area with minimum dimension not less than 1/2 inch), such drains shall not be plugged, or otherwise restricted and outline drawing shall so indicate.

3.20.6 Vertical joints.- Casing may be in two sections longitudinally with a vertical joint, however, the vertical joint shall not require disassembly to lift the upper-half casing.

3.20.7 Four-way casing joint.- Where four-way casing joints cannot be avoided, flanges may incorporate saw-cuts from the outside of the flange to the bolt hole adjacent thereto.

3.20.8 Test connection.- Special test connections may be provided at manufacturer's option, however, such connections shall be closed by threaded plugs (taper or straight thread) or by blank flanges. Plugs, if used, shall be seal welded.

3.20.9 Exhaust flange.-

3.20.9.1 Making-up joint.- The joint between the turbine and condenser shall be metal-to-metal (using a suitable sealing compound) when condenser supports the turbine. Where condenser is hung from turbine, a sheet asbestos gasket of approximately 1/8 inch thickness will be used.

3.20.9.2 Flange drilling.- Where turbine and condenser are bolted directly together, their flanges shall be drilled by the respective manufacturers, except that holes for body-bound bolts will be finish-reamed by shipbuilder at installation. The condenser flange will be drilled to a template or jig to be furnished by the turbine manufacturer. Where turbine and condenser are connected by a flexible connection, instructions for drilling of flanges shall be determined in accordance with shipyard installation procedures.

3.20.9.2.1 Template for condenser flange.- The turbine manufacturer shall furnish a thin metal template (for a single propulsion unit order) or a drilling jig with hardened bushings (for a multiple propulsion unit order) to the condenser manufacturer for drilling the condenser flange. When the condenser manufacturer has drilled the condenser flange, the template or jig shall at turbine manufacturer's option, be returned to the turbine manufacturer.

3.20.9.3 Responsibility for bolting.- Bolting and gasket (if required) will be furnished by condenser manufacturer except that cap screws or one-nut studs shall be furnished with the component tapped for same. The turbine and condenser manufacturer shall each be responsible for providing bolting and gasket (if required) where their respective components attach to a common flexible connection.

3.20.10 Casing lifting.-

3.20.10.1 Jacking bolts.- Flange jacking bolts shall be provided as necessary to permit readily breaking joints.

3.20.10.2 Diaphragm removal.- When upper-half casing is supported in the raised position and rotor is resting in bearings, it shall be possible to remove upper-half diaphragms, removal of all lower-half diaphragms shall be possible in this position or with casing and rotor supported in the raised position but not combinations of the two choices. Removal of horizontal joint studs to accomplish this will be satisfactory. However, this requirement for removal of diaphragms is waived if casing supports in excess of 36 inches in height are required to accomplish diaphragm removal.

3.20.10.3 Stud removal.- The design shall be such that dismantling or assembly does not require the removal of studs.

3.20.11 Lifting gear.- Lifting and handling gear (including flange jacking bolts) necessary for lifting all the turbine upper-half casings and rotors of one propulsion unit at one time in the ship constitutes one set. Lifting shall be possible when the ship has a list and trim of 5 degrees.

3.20.11.1 Materials for lifting and handling gear.- Lifting and handling gear shall be of steel except that aluminum may be used for casing supports and rotor guides.

Downloaded from http://www.everyspec.com

3.20.11.2 Lifting and supporting upper-half casing.- The lifting gear set shall include at least three corner guide pins or posts, dowelled casing supports, special eye-bolts, and such other items as are necessary to lift and support the upper-half casing. Casing supports shall be 36 inches in height or of sufficient height to permit removal of diaphragms whichever is less.

3.20.11.3 Lifting and supporting rotor.- The lifting gear set shall include rotor guides and saddle support assemblies, special eye-bolts, and any other special equipment necessary for lifting and supporting turbine rotors.

3.20.11.4 Shipbuilder-furnished lifting gear.- Traveler bars and trolleys, pulleys, deck-beam clamps, turnbuckles, shackles, hooks, chains, hoists, wire slings with thimbles, and spreader beams (for rotors) will be shipbuilder-furnished.

3.20.12 Inspection openings.-

3.20.12.1 Single-casing and L.P. turbines.- Manholes shall be provided on each side of single-casing turbines and L.P. turbines to permit visual inspection of uppermost tubes of condensers and the last rows of ahead and astern blading.

3.20.12.2 Cruising H.P. and I.P. elements.- Inspection openings shall be provided on H.P. and H.P. -I.P. casings to permit visual inspection of the last row of blading for each element contained therein.

3.20.13 Moisture separation and drainage.-

3.20.13.1 Internal moisture separation.- Provision shall be made for internal moisture separation in stages which normally operate in wet steam. Special requirement for internal moisture separators are as follows:

(a) Water dams.- Water dams, if used, shall be of corrosion-resistant alloy steel and shall be secured to casing by welding except for 12 chrome casings, in which case bolting is acceptable
(b) Drain orifices.- Removable drain orifices (minimum of 1/8 inch in diameter) shall be of corrosion-resistant alloy steel and shall be retained in casing by peening in addition to thread connection.
(c) Drain manifold.- Stage drains (except for last stage) for saturated steam applications shall be drained externally and not collectively drained to condenser through exhaust opening.

3.20.13.2 Internal casing drainage.- Provision shall be made for drainage of all parts of the casing. (Diaphragm grooves are not included.)

3.20.13.3 External drains.- All external drains shall be manifolded to the maximum extent practicable except that HP steam chest drain shall be separate. The turbine manufacturer shall indicate to the shipbuilder which drains can be manifolded. Manifolding including valves, orifices, piping and traps, as applicable, will be furnished by the shipbuilder.

3.20.14 Steam shields.-Steam (or windage) shields shall be provided for ahead stages having partial admission.

3.20.15 Steam deflectors.- Steam deflectors shall be provided to separate ahead and astern elements so as to prevent impingement of exhaust steam from one element on the other. The deflector may be forged integral with the rotor or be bolted to the casing. When separate, material shall be of a material similar to the adjacent casing and bolt-heads shall be recessed in counterbores and be peened over in at least three places.

3.20.16 Heat shields.- Heat shields between condenser and hot exposed surfaces of blade ring or casing in way of inlet pipe or belt shall not be provided.

3.20.17 Casing stay rods.- Casing stay rods shall be of similar material as the parts to which attached. The portion of stay rods subject to direct impingement of high velocity moisture shall be protected against erosion by either covering them with sleeves of erosion resistant material or other similar means.

Downloaded from http://www.everyspec.com

3.20.18 Blade throw-out protection.- Each casing (in conjunction with its internal wheel casings, blade rings and diaphragms) shall be designed to contain blades which may, during overspeed, be thrown from any stage of the turbine. Particular attention is directed to last stages.

3.20.19 Identification plates.- Metallic identification plates shall be attached to each turbine. Information contained thereon shall include the following:

(a) Manufacturer's name.
(b) Serial number of unit.
(c) Technical manual number.
(d) Rated power and rpm (if classified, denote by "Conf").

3.21 Packing (gland, dummy and diaphragm).-

3.21.1 Materials.- Labyrinth packing and springs shall be of the materials specified in figure 2. Carbon packing rings will not be permitted.

3.21.2 Type of packing.- All gland, dummy and diaphragm packing shall be of the labyrinth type and shall have at least four segments per ring.

3.21.3 Fin design.- Packing rings shall be machined with integral fins thinned on the inner diameter to an axial dimension of 0.010 ± 0.005 inch.

3.21.4 Flexibility.- Each ring shall be spring backed to prevent radial movement. Springs may be either of the flat or coil type.

3.21.5 Rotation.- Each ring shall be secured against rotation or circumferential displacement in its groove while turbine is in operation.

3.21.6 Surface finish.- Steam seal surfaces shall have a surface finish of 63 RHR or better.

3.21.7 Marking of rings.- To ensure correct installation, each seal ring shall be marked as follows:

(a) The mating surfaces of adjacent segments shall be match marked.
(b) Each ring with "T" shaped retaining shoulders and which can be improperly installed shall be stamped either with an arrow pointing aft or other marking to clearly indicate proper installation.

3.21.8 Removeability.- The turbine design shall permit removal of at least the two outer labyrinth packing rings at each end of each turbine without lifting the turbine casing. All packing ring casings shall be secured to either the upper or lower half of the turbine casing to prevent their falling out when upper-half turbine casing is lifted. After casing is lifted, it shall be possible to roll upper and lower ring segments out of their grooves without removing diaphragms or lifting the rotor.

3.22 Bearings, journal and thrust.-

3.22.1 Materials.- Materials of all bearing parts shall be in accordance with figure 2.

3.22.2 Journal bearing.- Bearings shall be of the plain cylindrical, elliptical, multi-lobed or pivoted pad type. Axial or circumferential grooving is permitted.

3.22.2.1 Loading.- Bearing load based on projected area shall be not greater than 250 psi under static load.

3.22.2.2 Wear pattern.- Load shall be distributed so as to produce an essentially rectangular wear pattern extending throughout the length of the bearing. Scraping following initial operation to obtain uniform patterns is permissible but shall not increase the original diametral clearance by more than 15 percent of the nominal clearance. All contact shall be only in the middle 120 degree of arc in the lower half.

Downloaded from http://www.everyspec.com

3.22.2.3 Clearance.- Design clearance shall be not less than 1.5 mils per inch of journal diameter.

3.22.2.4 Interchangeability.- Maximum interchangeability (consistent with design requirements) is required among bearings for the propulsion units. Doweling or equivalent shall be provided when necessary to prevent inadvertent assembly of a bearing in a location or position for which it was not intended.

3.22.2.5 Shell stiffness.- Bearing shells shall be of sufficient stiffness to prevent warping in service.

3.22.2.6 Rolling out bearing.- It shall be possible to remove each lower-half bearing without removing the rotor.

3.22.2.7 Lifting and handling bearings.- Provision shall be made for removal, lifting and handling of bearings as follows:

(a) Cap.- Each bearing cap shall either have integral lifting lugs or be tapped for lifting eyes which shall be so located as to prevent cocking when lifting the cap.
(b) Bearing shells.- Each half-shell weighing more than 35 pounds shall be tapped for one or more lifting-eyes. In addition, regardless of weight, each lower half-shell shall be tapped to facilitate removal, when rolling out around journal.

3.22.2.8 Reboring directions.- Each rebabbittable spherically-seated bearing and each sleeve bearing which is not bored concentric with the outer surface of the shell shall be provided with a concentric reference shoulder at each end for reboring. Unless otherwise marked on the bearing, the outside diameter of the shell will be used as the reference shoulder for boring.

3.22.2.9 Support.- Each bearing shall be supported by and contained in a housing consisting of a bearing pedestal and cover. Journal and thrust bearing shall be contained in a common housing. Bearings may be mounted in a fixed position or mounted to provide for self alignment by using a spherical seat or flexible supports. Spherical seats may be either loose or tight according to manufacturer's standard practice.

3.22.2.10 Boss for vibration pickup. Each bearing cap shall be provided with a boss for mounting a vibration pickup (used in conjunction with at-sea vibration analysis and shop tests (see 4.6.3 and 4.5.9 respectively). The boss shall be approximately a 2 inch square located at or near the vertical centerline of the cap with a 1/4 inch 28 thread hole 1/2 inch deep in the center of the boss. Mounting surfaces shall be machined flat and smooth to 125 RHR.

3.22.2.11 Bearing surfaces.-

3.22.2.11.1 Babbitt lining.- All friction or rubbing surfaces shall be lined with anti-friction metal in accordance with figure 2. Babbitt thickness shall be not less than 1/16 inch nor more than 3/16 inch.

3.22.2.11.2 Babbitting procedures.- Procedure for babbitting bearings shall be in accordance with NAVSHIPS 250-644-2 except that bond tests are not required.

3.22.2.11.3 Surface finish.- Babbitt surfaces shall be finished to 32 RHR or less.

3.22.2.11.4 Edge relief and chamfer.- The babbitt shall be sufficiently relieved along the joint at bore to prevent babbitt carryover and scoring of journals.

3.22.2.11.5 Grooving.- End leakage of oil from multi-lobe fixed-pad and pivoted-pad bearings shall be controlled by a circumferential babbitted seal strip at each end of bearing. Circumferential drain groove(s) shall be provided at one or both ends of other type bearings, with drain areas equal to or greater than end leakage areas.

3.22.2.12 Depth micrometer measurements.- Provision shall be made to permit the use of micrometer depth gages for measuring wear of all journal bearings without removal of bearing cap. Holes for the depth gage shall be located such that they are not subjected to lube oil pressure during operation. Collar-type plugs shall be used to close the

Downloaded from http://www.everyspec.com

holes and shall be attached to the bearing cover by a short length of flexible chain to prevent loss when removed. The depth micrometer graduations shall increase as spindle is screwed down. Depth gage constants shall be stamped on small plates attached to each bearing cap by the manufacturer.

3.22.2.13 Rotor radial position setting.- Where adjustable seating shims or pads are used for fixed-position mounting of bearings, means for determining the radial position of the rotor shall be provided.

3.22.2.14 Crown thickness measurement.- Provision shall be made for measuring wear by the crown thickness method, as specified in 3.22.2.14.1 through 3.22.2.14.6.

3.22.2.14.1 Scribe lines on cylindrically-bored sleeve bearing.- At each end at the bearing, the top half shall have a radial scribe line at the vertical center line, and the lower half shall have, at each end, three radial scribe lines (the central scribe at the bottom vertical center, and one on each side at an angle approximately 45 degrees). Both ends of bearing shall have an outside diameter machined to provide a reference surface for the micrometer.

3.22.2.14.2 Scribe lines on multi-lobed bearing types.- A radial line shall be scribed on each end of the bearing shell at the geometric center of each bearing surface arc whose center is displaced from the bearing center.

3.22.2.14.3 Scribe lines on fixed-pad bearings.- A radial line shall be scribed on each end of the bearing shell at the geometric center of the concentric arc of each pad

3.22.2.14.4 Scribe lines on pivoted-pad (or shoe) bearings.- A radial line shall be scribed on each end of each pivoted-pad or shoe in line with the fulcrum or pivot point on the back of the pad or shoe.

3.22.2.14.5 Point of measurement. The crown thickness of each sleeve type bearing shell and each pivoted shoe at the scribe points shall be measured from the end of the shell or shoe during assembly at a distance established by the manufacturer and shown in the manual and on applicable drawings.

3.22.2.14.6 Marking of constants.- Crown thickness constants shall be stamped adjacent to scribed lines at both ends of bearing. For spare bearings, constants shall be stamped by manufacturer prior to delivery.

3.22.3 Thrust bearings.- Thrust bearings shall be in accordance with materials specified on figure 2 and the requirements of 3.22.3.1 through 3.22.3.9

3.22.3.1 Type of thrust bearing.- Turbine thrust bearings shall be of the pivoted segmental-shoe type, designed to take thrust in both directions by locating equal size thrust elements on each side of a single thrust collar. Thrust shoes shall not be attached to, or derive support from, the journal bearing.

3.22.3.2 Load. The thrust bearing shall be capable of absorbing any thrust loads which may be developed within the turbine during specified operation. In addition, the thrust bearing shall be sized to include ample capacity for absorbing loads corresponding to 25 percent (minimum) of the tangential driving force in the flexible coupling connecting turbines and gear. Unit loading excluding transients shall not exceed 400 psi under normal steady state conditions.

3.22.3.3 Housing.- The thrust bearing housing shall be integral with the journal bearing pedestal. Housing shall be sufficiently rigid to maintain axial clearances in turbine under load. A 1/8 to 3/16 inch permanently-open drain shall be provided from the lowest practicable part of the thrust cavity to ensure drainage at shutdown.

3.22.3.4 Shims.- Liners or shims shall be fitted to permit adjustment of thrust clearance and of axial clearances within turbine. Stacking of shims is not permitted.

3.22.3.5 Collar.- A removable thrust collar keyed to shaft shall be provided, with a sliding fit (0.002 ± 0.001 inch loose) on the rotor, with a nut to secure the collar against the rotor shoulder. Sufficient room shall be incorporated in the design to permit slugging tight the securing nut, which shall have a right-hand thread. A positive

Downloaded from http://www.everyspec.com

means of locking thrust nut shall be provided; the use of a radial set screw is not acceptable. A thrust collar integral with a removable stub shaft is also acceptable.

3.22.3.6 Shoes.- Thrust shoes shall be lined with anti-friction metal in accordance with figure 2. Dovetail grooves in shoes to anchor the babbitt are permitted but are not required. Babbitt surfaces shall be smoothly and accurately finished (32 RHR or better).

3.22.3.7 Contact areas and bearing surfaces.- Friction and contact surfaces shall be smoothly and accurately finished. Surface finish and Brinell hardness requirements shall be as follows.

(a) Collar - 16 RHR or less (350±50 Brinell minimum).
(b) Leveling plate contact areas - 32 RHR or better on surfaces in contact with shoes or base ring; 63 RHR or better on wing surfaces.
(c) Buttons - 32 RHR or less (550±50 Brinell minimum).
(d) Base ring contact areas (or hardened inserts, where used) 63 RHR or better.

3.22.3.8 Clearance.- Design clearance shall be at the turbine manufacturer's option; however, allowable increase in clearance shall be at least 50 percent of the maximum initial clearance.

3.22.3.9 Wear measurement.- The detail drawing of the shoe shall indicate by note the place (thickness between button or other indicated surfaces on back of shoe and babbitted face of shoe) and design value of such a measurement, so that a micrometer check can be made to determine when to rebabbitt shoe.

3.22.4 RTE installation.- Each journal and thrust bearing shall be fitted with an electric resistance type temperature-sensing element referred to hereafter as RTE. There shall be one RTE in each journal bearing and in one shoe on each side of the thrust collar.

3.22.4.1 RTE.- The RTE (including wire and insulation) shall conform physically and electrically to MIL-T-22051.

3.22.4.2 Hole for RTE.- RTE'S shall be located at the geometric bottom center of bearing shell to permit interchangeability of bearings. The RTE shall be installed in accordance with figure 6 in a radial hole in the bearing shell, with the sensing tip 1/16 inch below bearing surface, with bottom of RTE casing bottoming on shoulder in hole as shown.

3.22.4.3 Puddling RTE in bearing.- The RTE shall be fusion-bonded to surrounding bearing babbitt in accordance with an approved procedure, and bearing surface shall be restored.

3.22.4.4 RTE wire grooves and connection blocks.- The two wires attached to the RTE shall be brought through a radially-drilled 0.187 inch maximum diameter hole and channelled in a groove (approximately 1/8 inch X 3/16 inch connecting radial hole with a connection block (see figure 7) recessed in bearing edge or end at, or close to, the bearing part line. A hardening epoxy-resin shall be applied in groove to protect wiring. Both wires shall be soldered to the connection block (see figure 8).

3.22.4.5 Internal wires and cables.- Wiring between turbine bearing connection block and the casing (or bearing pedestal) wall shall be recessed in epoxy-resin-filled grooves, in holes, or in armored sheath to protect it against damage. This wiring shall be easily disconnected (mechanically or by melting soft solder) from the bearing connection block and shall penetrate the casing wall through an "AN" connector or equivalent (see figure 7).

3.22.4.6 Casing wall "AN" connector.- The design shall provide an "AN" connector in the casing (or bearing pedestal) wall to connect internal wiring with external wiring. "AN" connectors shall conform to MIL-C-5015. Location of "AN" connectors shall be such as to minimize possibility of damage to connector and cables attaching thereto. Wall shall be oil tight at penetration point.

3.22.4.7 RTE installation in pivoted-shoe journal bearings.- The procedures in 3.22.4.1 to 3.22.4.6 shall generally apply for installing RTE'S in pivoted-shoe bearings,

Downloaded from http://www.everyspec.com

except that RTE shall (for ahead operation) be installed close to the trailing edge of one lower shoe, and the bearing connection block shall be recessed in the edge or back of shoe on the pivot-line.

3.22.4.8 RTE installation in thrust bearing shoes.- The shoes closest to the housing joint shall be so fitted with RTE'S to facilitate disassembly when shoes are removed for inspection and replacement. The RTE in each shoe shall be installed close to the trailing edge of shoe and outer diameter, and the bearing connection block shall be recessed in the edge or back of the shoe with a groove between the connection block and the edge of the shoe at the pivot line. Figure 9 shows acceptable arrangements for a thrust-shoe RTE.

3.22.4.9 Caution plate.- A caution plate shall be permanently affixed to the external top of the bearing cap warning that the RTE wires to the bearings must be disconnected before rolling out the bearing.

3.22.4.10 Bearing monitor.- Bearing monitors will be furnished by the shipbuilder.

3.22.5 Special tools.-

3.22.5.1 Bearing yokes and jack bolts.- The lifting gear set shall include yokes, jack bolts, and other special items necessary for removing the weight of rotors from lower-half bearings to permit removal of same from one propulsion unit.

3.22.5.2 Rotor jack.- A special device shall be furnished to provide for jacking rotor forward and aft to measure thrust clearance.

3.22.6 Oil deflectors.- Aluminum or bronze oil deflectors shall be provided to prevent leakage of oil from bearing housing. A steam shield shall also be provided to prevent gland steam from entering bearings.

3.23 Rotors.-

3.23.1 Materials.- Rotors shall be forged from a single billet conforming to materials specified in figure 2. Shrunk-on keyed wheels will be considered for turbines to be installed in auxillary type ships, however, NAVSEC approval is required.

3.23.2 Stresses.- Stresses shall be in accordance with 3.15.4.

3.23.3 Balancing.- Vibration limits and balancing requirements are specified in 3.14.

3.23.4 Coupling flange.- The coupling flange on the drive end of each rotor shall be integral either with the rotor or with a stub shaft bolted to the rotor except that shrunk-on couplings when other design considerations (such as obtaining a removable thrust collar) favor its use. The turbine manufacturer shall collaborate with the manufacturer of the driven component to obtain mutually satisfactory coupling design and loads.

3.23.5 Surface finish.- The surface finish of the overall rotor shall be 125 RHR maximum except as follows (maximum RHR values):

(a) Bearing journals - 16 (axial and circumferential direction)
(b) Radii of equalizing holes - Polished to 63
(c) Fillets and radii - 63
(d) Axial blade grooves - 63
(e) Circumferential blade grooves - 63
(f) Load carrying surfaces of blade dovetail - 63

3.23.6 Bearing journals.- Special attention shall be paid to roundness and concentricity of journals. Deviation from true roundness shall not exceed 0.000050 inch where quiet operation is specified, (see 6.2.2(q)) and 0.0002 inch for all other applications. Deviation in true roundness is defined as the difference in radii of two concentric coplanar circles which just contain the measured profile of the journal surface.

3.23.7 Packing journals.- Packing journals shall be smooth or stepped as necessary to match packing teeth. The use of packing sleeves shrunk on or keyed to rotor is prohibited. Lands shall be sufficiently rugged to withstand contact both radially and axially with the fins of the packing rings.

Downloaded from http://www.everyspec.com

3.23.8 Critical speeds.- The design of the rotors may be such that either the calculated or actual running first critical is within the operating range of turbine speeds.

3.23.9 Match marks.- At installation of the rotor, axial and circumferential position of the rotor relative to the casing shall be marked for future reference. These marks shall be accessible without lifting the casing but removal of bearing caps is acceptable.

3.23.10 Rotor bores.- Rotors may be solid or bored; if bored, the bore shall be chemically cleaned, purged with an inert gas and sealed with air tight plugs.

3.24 Blading and seal strips.-

3.24.1 Materials.- Blades, locking pieces and pins shall be of material specified in figure 2.

3.24.2 Production method.- Blades shall be machined (milled, cut, or broached) from bar or forged stock.

3.24.3 Solid blades.- Vane shall be solid and shall be produced with blade base from same piece of blade stock; welding of vane to base is not permitted.

3.24.4 Edge radii.- Blades shall have vane edge radii equal to or greater than the minimum values shown on figure 10.

3.24.5 Surface finish.- All blading shall be free from imperfections. Load carrying surfaces shall be finished to 63 RHR or better.

3.24.6 Stellite erosion shields.- Where the combination of moisture and tip speeds are such that erosion of blades may be a problem, blade inlet convex side shall be hard-faced with stellite brazed with a nickel rich silver-brazing alloy. Decision as to whether or not stellite shields are required will be based on previous operating experience under similar conditions for tip speeds in excess of 800 feet per second and moisture content of 10 percent of greater.

3.24.7 Contour of contact root surfaces.- Surfaces on blade roots which contact rotor shall be cut to the same radius as the corresponding rotor surfaces.

3.24.8 Blade tenon.- Shrouding shall be attached to blades by riveted (peened) tenons; welding is prohibited. Hot peening is acceptable; however, temperature shall be controlled by positive means such as a surface pyrometer or tempil sticks.

3.24.8.1 Fillets.- Sharp corners between tenon and tip of blade and between vane and blade base shall be avoided by suitable filleting.

3.24.8.2 Tenon shape.- Tenons shall be of round cross section unless elliptical or kidney-shaped tenons are required due to either geometry or strength reasons.

3.24.8.3 Tenon button-head.- The riveted tenon shall form a button-head on outer surface of shroud. Where holding power of tenon is adequate for required safety factors, the button-head and any excess shroud thickness may be machined off to provide flush tenon heads.

3.24.9 Shrouding.-

3.24.9.1 Materials for shrouding.- Shrouding shall be of the materials specified in figure 2.

3.24.9.2 Number of blades per shroud strip.- Number of blades per shroud strip shall be as recommended by the turbine manufacturer and shall be indicated on the applicable drawings.

Downloaded from http://www.everyspec.com

3.24.9.3 Notch block gap.- The shroud strip segment may span the gap where a notch block is used (and the blade omitted). Where quietness of operation is a requirement, (see 6.2.2(o)) every effort shall be made to close the gap with a closing blade which can be shrouded.

3.24.9.4 Drilling or punching of shroud. Shroud tenon holes may be drilled, milled or punched. When shrouds are milled or punched, each set of blades for stock shall include the necessary milling template or punches. Drilled or milled shrouding requires no annealing. All punched shrouds with thickness of 3/16 inch and larger shall be stress relief annealed after punching. All tenon holes shall have a chamfer or radius on both sides of the shroud and, unless otherwise approved, shall be located directly from the bladed wheel, or from templates made or set therefrom; spare shroud bands shall be furnished without tenon holes, unless specifically approved otherwise. A note on detail drawings shall indicate method of production and recommended method of installation showing or stating number of holes in each strip. If choice of milling or punching shrouding for replacement blading exists, the drawing note shall so state.

3.24.9.5 Contact area with vane tip.- Shrouding shall, at installation, have maximum bearing practicable against the end of blade vane. See 4.5.2 2 for limits in gap clearance.

3.24.9.6 End gap between adjacent shroud strips.- Shroud strips shall have sufficient end clearance to ensure that, under maximum operating speed and temperature, they do not expand so as to touch each other and impose stress on blade tenons.

3.24.9.7 Bevel on sealing edge.- Shroud strips of more than 1/16 inch thickness used to seal axially, shall be beveled along the sealing edge to approximately 1/32 inch edge thickness.

3.24.9.8 Slanted shrouding.- The installation of shrouding at an angle is permitted up to 15 degrees maximum angle with rotor axis.

3.24.9.9 Channel shrouding.- Channel shrouding is permitted only in conjunction with segmental blading.

3.24.10 Blade root fastenings in rotor.- Rotor blade root fastenings may be either radial-entry or axial-entry. Blade attachment to rotor shall be by mechanical means and shall use either "T" or "Fir Tree" shaped roots.

3.24.10.1 Axial entry blades.- For axial entry blades, non-hardened steel pins (of suitable size and shape to permit shearing when driving individual blades of grooves) shall be provided to secure blades against movement in operation. Blades shall obtain necessary blade fit in blade grooves by filing metal ridge on bottom of blade root or by other suitable means. Where pitch of blades is adequately controlled, blades may be installed with clearance in the root, however, maximum movement as measured at the blade tenon shall not exceed 0.020 inch per inch of overall blade height for double tang roots and 0.010 inch per inch of overall blade height for triple tang roots.

3.24.10.2 Radial entry blades.- Radial entry blades shall be installed with a fit not exceeding plus or minus 0.0005 inch. This may be obtained by either filing or trimming a metal ridge on the blade or by use of calking strips. Calking strips shall be rectangular or half-round pieces equal in length to the approximate thickness of the blade root. Locking pins for the notch block or closing blade shall be of the material specified in figure 2. The use of shims for circumferential fitting of blades is permitted subject to NAVSEC approval of the procedure.

3.24.11 Stationary blading.- Stationary blades for impulse stages and reaction stages (drum type construction) may be installed individually or as groups of blades Intermediate segments and separate blade rings shall be secured to the casing by either mechanical means, or calked in to a dovetail groove of the casing.

3.24.12 Seal strips.-

3.24.12.1 Materials.- Materials for seal strips shall be in accordance with figure 2.

Downloaded from http://www.everyspec.com

3.24.12.2 Axial seals.- Removable axial seal strips may be used in the first ahead control stage. Axial sealing in all other stages shall be obtained as an integral part of the blade and diaphragm geometry.

3.24.12.3 Radial seals.- Radial seals may be used only in ahead stage of LP turbines when necessary to meet the specified performance.

3.24.12.4 Approval of design.- Axial and radial seal strips shall be capable of being replaced and shall be secured by a method as approved by NAVSEC.

3.25 Nozzle blocks and diaphragms.-

3.25.1 Materials.- Materials for nozzle blocks, diaphragms, partitions and bolts shall be in accordance with figure 2. Crush pins shall be of corrosion-resistant material and may be attached by either welding or mechanical means.

3.25.2 Steam flow surfaces.- Steam flow passages shall have a surface finish of 63 RHR or better in direction of steam flow except for approach to throat section which may be 125 RHR maximum.

3.25.3 Construction.- Nozzle blocks and diaphragms shall be either fabricated, cast, or reamed construction.

3.25.4 Lifting and removal.- The upper-half of each diaphgram and nozzle block shall be lifted with the upper-half of the turbine casing. Each diaphragm half shall be drilled and tapped for one or more lifting eyes to facilitate lifting and handling. Each lower-half diaphgram shall be drilled and tapped at each joint part surface to provide a means for removing lower-half diaphragm (by pulling with eye-bolt or draw-bolt) when rolling out of casing groove.

3.25.5 Partitions.- Partitions shall be rolled, cast or machined. Trailing edges of partition vanes shall conform to radii shown on figure 10. The following additional requirement applies to cast partitions:

Precision-cast 13-chrome partitions may be used, provided each casting includes a partition integral with a thick band or ring segment at each end; such segments, when welded together are to form heavy inner and outer bands or rings.

3.25.6 Nozzle block details.-

3.25.6.1 Securing block in casing.- Ahead and astern nozzle blocks shall be removable from casing. When bolts are used for this purpose, the bolt heads shall be recessed below the surface of the surrounding metal and be secured by either peening in at least three places, or by suitable shielding. Calking strips used to retain nozzle blocks in casing grooves shall be secured to prevent their falling out or rotating in the groove.

3.25.6.2 Nozzle bridges.- Adjacent arcs or groups of nozzles shall be bridged to minimize leakage.

3.25.7 Diaphragm joint.- The joint between two diaphragm halves shall be tongued and grooved or keyed to minimize leakage through the joint.

3.25.8 Spare diaphragms.- Diaphragms furnished as repair parts shall be finish-machined and ready for installation, except that crushing pins shall be 1/8 inch oversize, or furnished long and short.

3.26 Onboard tools and maintenance parts.- Items listed in table III shall be furnished as applicable and shall be shown on NAVSHIPS 4786 form.

Downloaded from http://www.everyspec.com

Table III - Onboard tools and maintenance parts

Item	Quantity per ship	Reference
1. Special tools (as applicable)[1/] For:		
(a) Measuring crown thickness	1 set	3.22.2.14
(b) Removing and setting over-speed devices	1 set	3.10.7
(c) In-field balancing (weights not included)	1 set	3.14.4
(d) Alignment of spherical seating bearings	1 set	3.22.2.9
(e) Removing thrust collar	1 set	3.22.3.5
(f) Taking thrust clearance	1 set	3.22.5.2
(g) Unbolting and remaking casing flanges	1 set	3.19.3.10 and 3.20.4.1
(h) Replacing stub shafts	1 set	3.22.3.5
2. Bearing yokes and jack bolts	1 set	3.22.5.1
3. Bolt heaters and extensiometers	2 each size	3.19.3.9
4. Depth micrometer gage	1 each size	3.22.2.12
5. Lifting gear	1 set/shaft up to maximum of 2 sets	3.20.11

[1/] Special tools are defined as those items not listed in the Federal Supply Catalog (copies of this catalog may be consulted in the office of the DCAS.)

3.27 Repair parts.-

3.27.1 Onboard and stock repair parts.- Onboard repair parts shall be in accordance with figure 11 and will be either furnished with the turbine or procured separately by the inventory control point. Stock repair parts (shore-based) shall be handled in accordance with procedures of MIL-P-15137. Stock repair parts to be recommended are shown on figure 12 plus the following (to cover at least one ship of each design):

(a) Bladed rotors
(b) Expansion joint for cross over pipe
(c) Valves, valve seats, lift rods and bushings
(d) Horizontal joint bolting (1 set)
(e) Thrust collar

3.27.1.1 Inventory control point.- Ships Parts Control Center (SPCC) Mechanicsburg, Pa. is the Inventory Control Point (ICP) for all repair parts.

3.27.2 Interchangeability.- Repair parts shall be identical and interchangeable with their respective standard-installed parts, and shall be capable of being installed without any special fitting, machining, running-in, or other work, except as allowed below

(a) Exceptions on approved drawings.- Exceptions to above interchangeability requirements are permitted, if approved by NAVSEC and so noted on applicable drawings.
(b) Blading exception.- All blading material, except shrouding, shall be furnished completely finished and ready for use, except for design allowance if any on blade roots for fitting. Blade material which is to be installed in segmental form shall be furnished assembled in segments.
(c) Shrouding exception.- Shrouding shall be furnished cut to length. Surplus stock for axial trimming to obtain specified clearances is acceptable. Unless otherwise approved by NAVSEC (See 3.24.9.4), shrouding shall be undrilled and unpunched for blade tenons.
(d) Diaphragm crush pins. Crush pins shall be fitted at installation.

3.27.3 Spare rotors.- Spare rotors shall be completely bladed and be ready for installation without further machining. Thrust collar, coupling and overspeed sensing devices shall be included. Balancing is required and, unless specifically waived in the

Downloaded from http://www.everyspec.com

contract, the overspeed test of 4.5.9 shall be performed either in a similar casing for which rotor is intended or by use of a special testing facility.

3.27.4 Provisioning list.- NAVSHIPS 4786 and 4786A forms are required for all repair parts and shall be prepared in accordance with MIL-P-15137 except that the turbine manufacturer shall include in the lower right hand margin a drawing title block and revision column. The provisioning list shall be used as a drawing of onboard parts and may be used as packing and shipping list. Applicability of parts shall be indicated in remarks column.

3.28 Drawings.- Drawings shall conform to MIL-D-1000 as modified hereinafter. Drawings shall be Form 2 and are required for intended use categories A, B, D, G, H and I.

3.28.1 Modifications and clarifications to MIL-D-1000.-

3.28.1.1 The drawings required to manufacture the turbine and components furnished therewith plus the drawings required by paragraph 3.28.3 herein constitute the total number of drawings involved in meeting intended use categories. Clarification of categories is as follows:

(a) Category A (Design evaluation).- Those drawings specified herein for use at the design approval conferences and those requiring NAVSEC approval.

(b) Categories B (Interface control) and G (Installation).- Those drawings required to provide the shipbuilder with sufficient information to design support systems and to install the equipment. Included are the following drawings:

(1) Outline and arrangement.
(2) Gland seal, vent and drain.
(3) Lube oil flow.
(4) Instrumentation.
(5) Lifting arrangement.
(6) Crossover assembly.
(7) Piping.
(8) Subbase.

(c) Category D (Logistic support).- Provisioning list and other drawings required by MIL-P-15137.

(d) Categories H (Maintenance) and I (Government manufacture).- Drawing shall contain sufficient information to permit manufacture and maintenance of all parts by a Naval activity. Submission of microfilm in accordance with 3.29 herein will fulfill requirements for these categories.

3.28.1.2 Contractor drawing numbers and code identification shall be used.

3.28.1.3 Identification of interface, specification, and source control drawings is optional.

3.28.1.4 Preparation of engineering drawings to cover items which could be described by reference to Government or industry specifications is acceptable when identification of the item is thereby improved.

3.28.1.5 Drawings shall specify marking detail (where and how) when purchase specifications contain marking requirements and when marking to be done by the manufacturer requires control to prevent stamping on highly stressed parts.

3.28.2 Additional requirements.-

3.28.2.1 Title block.- Revision symbol shall be shown in the title block following the drawing number.

3.28.2.2 Revision block. The revision block shall include columns showing revision symbol, description of change, zone, date of revision and approval letter where applicable.

Downloaded from http://www.everyspec.com

3.28.2.3 Parts list.- Each assembly and subassembly drawing shall have a parts list (either on the drawing or on a separate drawing properly referenced) which shall include the following

(a) Item or find number.
(b) Quantity required.
(c) Part identification.
(d) Nomenclature or description.
(e) Unit weight (where over 10 pounds). (unless shown on detail drawing of the part)
(f) Material identification (unless shown on detail drawing of the part).

3.28.2.4 Zoning.- Vertical and horizontal zoning shall be used for C size drawings and above.

3.28.2.5 "Manufacturer's use only" notes.- Information intended for manufacturer's use only shall be so designated.

3.28.2.6 Subcontractor drawings.- Subcontractor's drawing number of finished items shall be used as the single reference identification in all cases where the part(s) delineated thereon is (are) produced by the subcontractor. The prime machinery contractor shall not add his drawing number to the drawing, except as an unofficial reference outside the drawing border or margin.

3.28.2.7 Material identification.- Material for all parts shall be identified on detail drawings or parts list as applicable. Material may be defined by manufacturer's specifications for non-specified parts and for principal parts when approved in accordance with 3.4.2; however, double identification is required. This may be on the same drawing by a reference to a government or national society specification which identifies an equivalent material for use in conducting repairs or in manufacturing the part. An alternate method that will be accepted is to provide a separate drawing (A size), to be called a "Material List", which contains a complete list of the manufacturer's specification in numerical order with equivalent government or national society specification indicated for each manufacturer's material. If the alternate method is used, reference to the "Material List" shall be shown on all drawings which require material identification.

3.28.2.8 Welding and nondestructive testing (NDT) information .- Drawings shall show all essential welding fabrication details and areas requiring nondestructive testing. Welding and NDT symbols shall comply with AWS A2.0 and AWS A2.2 respectively.

3.28.3 Special drawings.- The drawings specified in 3.28.3.1 through 3.28.3.10 are required in addition to all drawings required for manufacture and assembly of the turbines.

3.28.3.1 Outline and arrangement drawing.- A turbine outline and arrangement drawing shall be furnished for each propulsion unit. When differences in port and starboard can be clearly shown by appropriate notes, one drawing is acceptable. The outline drawing shall contain, as applicable, the following, except that no information with a security classification shall be included

(a) Overall and principle dimensions of major components including height to lift casings to replace diaphragms; complete listing of all turbine connections to systems, fittings, and other components showing location, size and rating. Reference to separate piping drawing is acceptable.
(b) Curves or tables indicating design thermal movements and allowable forces and moments that can be imposed on turbine by external piping.
(c) The amount and direction of cold springing of turbines supports, if required at installation, together with the maximum deflection anticipated under operating conditions, if none is required, so state.
(d) Table of weights by components for lifting and handling purposes. Values shall be revised as necessary on final issue of drawing to reflect actual weights obtained by weighing parts of first unit delivered.
(e) Seating and loading arrangement (turbine on girder or pads) with foundation bolting indicated (quantity, size, location, type of fit, and so forth).
(f) All openings for inspection or clearance measurement. (If not shown on assembly drawing)

Downloaded from http://www.everyspec.com

(g) List of reference drawings, including reference to drawing list, sectional assembly, gland seal diagram, lube oil diagram, instrumentation drawing and piping drawings (if applicable).
(h) When applicable, arrangement for singling up operation.
(i) Location of center-of-gravity of each assembled turbine.
(j) Applicable contract or purchase order number, ship identification and building yard.

3.28.3.2 Assembly drawing.- An assembly drawing shall be furnished for each turbine design and shall include the following (differences in port and starboard units may be shown by note in lieu of furnishing separate drawing):

(a) Side elevation of upper and lower half turbine sectioned longitudinally as necessary to show internal parts.
(b) End elevations at each end transversely sectioned to show nozzle control valves and other internal parts as applicable.
(c) Major parts shall be called out, and identified by name and material in a list of material, which may be integral with, or referenced on, the assembly drawing.
(d) Rotor bore, if applicable.
(e) Gland, dummy and diaphragm packing rings shall be numbered consecutively beginning at the thrust end.
(f) Detail of overspeed protective devices, if applicable.
(g) Representative views of inner casings, packing casings, astern chamber or steam ring and diaphragm support and retention features shall be shown by enlarged view or section.
(h) Indicate gland seal, gland leak-off, oil supply and oil drain connections.
(i) Indicate waste oil-and-water pockets (if applicable) and drainage of same.
(j) Water removal features and casing drains shall be indicated.
(k) Means of providing for longitudinal and radial expansion (flex-leg, keys, clearance bolts and so forth) of casing shall be shown or described by notes and sketches.

3.28.3.3 Clearance drawing and overhaul report form.- A combined clearance and overhaul report drawing shall be prepared for each turbine design; the drawing shall contain a longitudinal assembly view of the rotor with detail views indicating "cold" clearances for parts as listed in 3.28.3.3.1 through 3.28.3.3.7 in tabular form with columns entitled "design" (values filled in) and blank spaces for "as found" and "as closed" clearances. Drawing shall indicate tolerances for installation and maximum allowable clearances for which replacement or reconditioning of parts is recommended.

3.28.3.3.1 Blading clearances.- Clearances (radial and axial) shall be shown for rotating blading at its closest approach to casing, diaphragm, nozzle block, seal strips and other non-rotating parts.

3.28.3.3.2 Bearing clearances.- Diametral clearances shall be shown for journal bearings. The clearance or fit between each bearing shell and its cap shall be indicated. Axial float of the thrust collar shall be shown with the rotor hard up against either set of shoes.

3.28.3.3.3 Diaphragm and gland packing clearance.- Axial and radial clearances shall be shown for each labyrinth packing ring. Provision for recording axial clearances is not required.

3.28.3.3.4 Oil seal clearance.- Radial clearances shall be shown for each oil ring.

3.28.3.3.5 Rotor radial position setting.- Where reference measurements are used for checking radial position of rotors utilizing bearings with adjustable seating pads, the radial reference measurements to be used as constants and method of measurement shall be shown.

3.28.3.3.6 Axial position.- Provision for determining axial position of rotor (see 3.23.9) shall be indicated.

Downloaded from http://www.everyspec.com

3.28.3.3.7 Notes.- There shall be notes on the drawing similar to the following:

Note 1 - All radial and diametral clearances shown are with the rotor journals---(manufacturer shall state here whether journals are concentric with casing bore or resting in the bottoms of bearings). Two or more radial clearances shall be shown for parts having their axes eccentric with rotor axis.

Note 2 - All clearances shown are "installation clearances", which should be used as a guide when blading, bearings, thrust shoes, packing rings or oil seals are reconditioned or replaced.

Note 3 - If applicable, include caution note regarding taking total float measurements which can damage packing teeth. If total float can be taken, show expected value.

3.28.3.4 Gland seal vent and drain diagram.-

3.28.3.4.1 Liaison with shipbuilder.- The turbine manufacturer shall collaborate with the shipbuilder as necessary to prepare a gland seal, vent and drain diagram.

3.28.3.4.2 Schematic.- This drawing shall indicate schematically the turbine connections for gland seal, leak-offs from glands and valve stems, and casing and chest drains. Piping shown, but not furnished by turbine manufacturer, shall be dotted or phantomed, while solid lines represent items and connections furnished with turbines.

3.28.3.4.3 Direction of flow.- The direction of flow in each line shall be indicated by an arrow or other means.

3.28.3.4.4 Connection sizes.- The size of each line and connection shall be indicated.

3.28.3.4.5 Flow data.- The values (seal and vent) of steam flow, air flow and temperature at each gland seal shall be tabulated for specified endurance power, full power, standby, and astern conditions. These values shall be normal clearance flows and shall be used for steam rate calculations and heat balance studies. Capacity of regulator and dump valve shall be shown. An ambient air temperature of 120°F shall be used for calculations.

3.28.3.4.6 Notes.- There shall be notes on the drawing similar to the following:

Note 1 - Flows shown correspond to the normal packing clearances which are expected to exist upon completion of PAT and are designated as normal clearance flows.

Note 2 - The capacity of the gland seal system, gland exhauster system, and leakoff piping shall be based upon "maximim clearance" flows. (corresponding to "maximum clearances" which require replacement of packing due to excess leakage); these maximum flows, calculated for 2 psig in the seal pocket and 5 inches of water vacuum in the leak-off pocket, are as follows. (manufacturer shall indicate values here).

3.28.3.5 Lube oil flow diagram.-

3.28.3.5.1 Liaison with shipbuilder.- The turbine manufacturer shall collaborate with the shipbuilder as necessary to prepare a lube oil feed and drain diagram.

3.28.3.5.2 Schematic.- The drawing shall indicate schematically bearing inlet and drain connections and, as applicable, oil connections to overspeed mechanisms, control mechanisms and gland seal regulator. Piping shown, but not furnished by the turbine manufacturer, shall be dotted or phantomed, while solid lines represent items and connections furnished with turbines. Size of each connection shall be shown.

3.28.3.5.3 Flow data.- Values of oil flow (gpm) shall be shown at each connection. Direction of flow shall be indicated by an arrow. By note or table, drawing shall also indicate conditions for which oil flows apply (state percent power, and pressure).

Downloaded from http://www.everyspec.com

3.28.3.5.4 Bearing orifices.- Size and location of bearing orifices shall be indicated. Where orifices are integral with bearing shell, a note to this effect (giving a size) is satisfactory.

3.28.3.5.5 Heat rejection.- The drawing shall show heat rejection data for use in sizing the lube oil cooler.

3.28.3.6 Valve control drawing.- A combination isometric/schematic drawing of the valve control system shall be furnished. Drawing shall indicate valves and linkages and include information for setting and adjusting control mechanisms.

3.28.3.7 Instrumentation drawing.- An instrumentation drawing shall be furnished and shall contain an outline of the turbine (with cut-out views as necessary) indicating all points of instrumentation either furnished with the turbine or by shipbuilder. A table showing maximum expected values of temperature and pressure shall be provided. Sentinel valves (with settings given), rotor position indicator, sight flows, and bearing RTE's (include location of external connections) shall be included.

3.28.3.8 Drawing list.- A drawing list is required for each turbine and all drawings applicable to equipment furnished shall be listed thereon. The list shall provide a complete breakdown with an alphabetized index thereunder by major assemblies. It is the intent of this requirement to carry part generation breakdown to the detail drawings which support the subassemblies even though the detail parts may lose their identity in the assembly. The list of preferred materials and comparison sheets are not included in the drawings to be listed.

3.28.3.9 Machinery variation summation drawing.- A machinery variation drawing shall be furnished for each class of ships. (Class of ships as used here refers to those units covered by the same manual). This drawing shall contain a post production summation of all variations which involve special repair parts or affect maintenance actions (see 3.33) and shall indicate for each variation a brief description of the deviation from the basic drawing, the serial number of unit affected, the hull number of the ship to which assigned, and the necessary correlation with special parts and repair parts which result from the variation.

3.28.3.10 Lifting arrangement drawings.- Drawings shall illustrate the use of lifting and handling gear furnished for rotor and casing. Weights of parts to be lifted or handled shall be shown.

3.28.4 Drawing approval.-

3.28.4.1 Drawings requiring approval· (categories are those of MIL-D-1000).-

a. Category A.- The following drawings require NAVSEC approval.

(1) Assembly drawing(s) (see 3.28.3.2).
(2) Clearance drawing (see 3.28.3.3).
(3) Cross-over piping assembly (including expansion joint).
(4) Applicable drawings indicating radiographic inspection (see 4.4.3).
(5) Onboard repair parts list (see 3.27.4).
(6) Instrumentation drawing (see 3.28.3.7).

b. Categories B and G.- For shipbuilder-furnished equipment, the following drawings require approval by the Cognizant Supervisor.

(1) Outline and arrangement drawing(s).
(2) Lifting arrangement drawing.

For government-furnished equipment, the above require NAVSEC approval.

c. Categories H and I.- Except for the above, other drawings in these categories shall be self-approved by the turbine manufacturer.

3.28.4.2 Approval procedure.- The detailed procedure for submitting original and revised drawings for approval shall be as established subsequent to award and will be

Downloaded from http://www.everyspec.com

dependent upon the activities involved. A drawing submittal schedule shall be furnished by the turbine manufacturer (see 3.32). General requirements include the following:

(a) Thirty days (from receipt of drawings) shall be allowed for approval action.
(b) Two copies of each drawing shall be forwarded to NAVSEC and each shipyard involved and one copy of each drawing to each Supervisor involved.
(c) Drawings which have been revised solely to reflect approval comments shall be resubmitted for information only.
(d) Previously approved drawings which apply without change do not require reapproval.

3.28.4.3 Approval responsibilities.- Approval action taken by NAVSEC, NAVSHIPS, or its authorized representative shall not be construed to relieve the contractor from any contractual obligations regarding performance, reliability or other specification requirements.

3.28.4.4 Approval notation on drawings.- Drawings which have been approved by NAVSEC or the Supervisor shall bear a notation citing the approval letter. Drawings self-approved by the turbine manufacturer shall contain a notation citing approval by a turbine manufacturer designated specialist (qualified in engineering and drafting) who has design responsibility.

3.29 Microfilm.- Microfilm mounted in aperture cards and tabulating index cards shall be furnished in accordance with MIL-M-38761. Preproduction inspection is not required. All drawings shall be photographed one sheet per frame in an upright position where possible.

3.29.1 Set of cards.- A set of cards shall consist of all drawings shown on the drawing list.

3.29.2 Format.- Cards shall be DD form 1562, code T of MIL-STD-804.

3.29.3 Type and class.- Cards shall be type I, class 1 of MIL-C-9877.

3.29.4 Key punching.- Aperture and tabulating index cards shall be punched and interpreted in accordance with MIL-STD-804 and the following:

(a) Card columns 31-32; punch the frame number of multiframe drawing. A single frame drawing shall have frame number "1" entered in right hand column. This information shall be interpreted using interpreter bar locations 29U30.
(b) Card columns 33-34, punch the number of frames required to completely photograph the drawing. The number of frames digit shall be entered in the right hand column. This information shall be interpreted using interpreter bar locations 31U32.
(c) Card columns 35-46 shall be left blank.
(d) Card columns 48-49, insert control activity symbol "HR". This information shall be interpreted using interpreter bar locations 51U52.

3.29.5 Quantity to be furnished.-

(a) 1 set of aperture cards with microfilm type I, class 1, of MIL-M-9868 and 1 set of tabulating index cards to Navy Publication and Printing Service (Code 0724), Washington, D. C.
(b) 1 set of aperture cards with microfilm type II, class 2 of MIL-M-9868 to NAVSEC Washington (Att SEC 6145).

3.29.6 Revisions.- If drawing revisions occur after submittal of cards and within the warranty period, replacements shall be furnished.

3.30 Manuals.- Manuals shall conform to type I of MIL-M-15071 except as modified herein.

3.30.1 Validation.- Validation is required only for those items indicated on figure 13. Once a procedure has been validated, it does not require re-validation when only

Downloaded from http://www.everyspec.com

part number identification has changed. Validation does not need to be completed prior to submission of preliminary manuals for approval, however, validation must be completed prior to final submittal.

3.30.2 Outline of manual.- The format for arrangement and content of the manual shall be indicated as below. Information on installation is not required.

FRONT MATTER

CHAPTER 1 - GENERAL INFORMATION AND DATA.

Section 1 - General Description of propulsion plant.
Section 2 - Turbine data.

CHAPTER 2 - DETAILED DESCRIPTION AND OPERATORS MAINTENANCE.

Section 1 - Coverage of turbine and components.
Section 2 - Coverage of related systems.

CHAPTER 3 - OPERATION.

CHAPTER 4 - TROUBLE SHOOTING.

CHAPTER 5 - OVERHAUL MAINTENANCE.

CHAPTER 6 - APPENDIX.

Section 1 - List of assembly drawings.
Section 2 - Fold-out figures.

3.30.3 General requirements.-

3.30.3.1 Scope.- The manual shall cover the turbines and accessories such as the astern valve, gland seal regulator and main steam strainer when such are furnished by the turbine manufacturer. The main reduction gear shall be covered in a separate manual.

3.30.3.2 Number and size of volumes.- Manuals shall be single volume unless thickness exceeds 4 inches. If two volumes are required to meet limit on maximum thickness, second volume shall contain Chapter 6.

3.30.3.3 Photography.- The use of photographs to supplement description and maintenance coverage is required. As a minimum, photographs or sketches of the following shall be included:

(a) Typical journal bearing.
(b) Method of taking crown thickness.
(c) Typical thrust bearing.
(d) Thrust collar locking device.
(e) Gland packing ring assembly.
(f) Typical blade assembly to rotor showing locking piece.
(g) Typical diaphragm support.
(h) Turbine assembly with upper half casing removed.
(i) Series of photograph showing RTE installation.

3.30.3.4 Printing.- Double-column printing (unjustified is acceptable, that is, right margin may be uneven) is required for the text. Paragraph or group headings shall be of either bold type or capital letters.

3.30.3.5 Numbering.- A decimal system of numbering shall be used for the text.

3.30.3.6 Final manual.- The following requirements shall apply.

(a) Cover size.- Approximately 9-1/2 inches X 11-1/2 inches, with index margin tab allowance.
(b) Cover material - Supported vinyl (heat sealed on 120-point Davey Board).

Downloaded from http://www.everyspec.com

(c) Cover hinges - Reinforced with nylon.
(d) Post spacing - Three posts on centers approximately 4-1/2 inches.
(e) Binding - Manuals shall have loose-leaf binding. Expandable backbones with slide type retainers are required where manual thickness exceeds two inches; threaded post type is acceptable for manuals two inches or less in thickness.
(f) Identification - Imprint face of cover and backbone. Ship class shall be indicated on backbone. Lettering shall be by the silk screening method.
(g) Margin tabs - Hard durable tabs (on page size separators and not protruding beyond binder edge) with arabic numeral for each chapter shall be included.

3.30.4 Detailed requirements.- Detailed requirements for manual contents are specified in 3 30.4.1 through 3.30.4.7. These requirements take precedence over MIL-M-15071 except where noted otherwise.

3.30 4 1 Front matter.- Requirements of MIL-M-15071 apply.

3 30.4.2 Chapter 1 - General information and data:

(a) Section 1 - Section 1 shall briefly describe turbines and components furnished by the turbine manufacturer. Include statements regarding number of propulsion units on ship, direction of rotation of turbine rotors and whether or not condenser supports or is supported by the turbine.
(b) Section 2 - Section 2 shall contain items 6,7,8,10,11(b) and 16 of column 6 in figure 14.

3.30.4.3 Chapter 2 - Detailed description and operators maintenance.- Detailed description and maintenance actions which will be performed by ship's force shall be combined in one chapter. There shall be two sections as follows.

(a) Section 1. Include coverage of turbines, parts thereof, and other components furnished by the turbine manufacturer.
(b) Section 2. Include coverage of the following systems (to the extent that they are a part of the turbine or furnished by the turbine manufacturer).

(1) Valve control.
(2) Gland seal, vent and drain.
(3) Lubrication.
  a. Lube and control oil.
  b. Lubrication guide.
(4) Instrumentation.
(5) Overspeed.

Instructions and procedures for the items listed on figure 13 shall be included in sufficient detail to permit accomplishment by ships force. Reference to drawings contained in Chapter 6 for data or information is acceptable. Separate procedures shall be provided for disassembly and reassembly. The instruction such as "reassemble in reverse order of disassembly" is not acceptable.

3.30.4.4 Chapter 3-Operation.- Guidance for operating the turbines shall be provided for the areas listed below Information on operational limitations such as maximum and minimum back pressure, allowable bearing temperatures, minimum oil pressures, minimum and maximum oil inlet temperatures and other operating parameters to provide specific guidance for operating the turbines is required. Step-by-step instructions covering support systems are not required, for example, it is sufficient to state "Build up vacuum to 25 inches Hg".

(a) Warming-up procedures (state minimum time).
(b) Standing-by.
(c) Underway, maneuvering.
(d) Securing.
(e) Locked-shaft operation.
(f) Trail-shaft operation (with and without vacuum).

Downloaded from http://www.everyspec.com

(g) Singled-up operation.
(h) Astern operation.
(i) Extraction operation.
(j) Testing overspeed trip.
(k) "Override" mode of operation where applicable.
(l) Windmilling operation.

3.30.4.5 Chapter 4 - Trouble shooting.- Provide guidance regarding immediate action to be taken, probable causes, and recommended corrective actions for the following symptoms of trouble:

(a) Vibration.
(b) Low oil pressure.
(c) High gland seal pressure or blowing steam in gland area.
(d) High stage temperatures.
(e) High bearing temperatures.
(f) Low vacuum.
(g) Casing steam leaks.
(h) Continued rotation of turbines when valves are closed.
(i) Valves stuck open.
(j) Inability to develop full power rpm.

3.30.4.6 Chapter 5 - Overhaul maintenance.- Procedures and instructions related to those maintenance actions which will be performed by shipyard personnel may be limited in scope to the areas listed as follows: Depth of coverage is intended to be general in nature and not detailed step-by-step procedures for accomplishing the action involved.

(a) Reblading - Include any special details or caution notes that are necessary to reflect differences from the manufacturers normal practice.
(b) Diaphragms - Provide general instructions for removing and installing diaphragms. Point out need to check applicable drawings for off-set.
(c) Lifting casing and rotor - Cover use of lifting gear. Include caution note where internal bolting must be removed.
(d) Steam joints - Provide a specific bolt tightening schedule if required to obtain a steam tight joint; provide instructions for bolt tightening to obtain required pre-stress; cover use of bolt heaters where applicable; cover joint surface preparation.
(e) Vibration - Refer to bearing cap bosses which can be used for taking vibration data; include method of installing and securing infield balance weights and identify location of infield balancing planes.

3.30.4.7 Chapter 6 - Appendix.-

(a) Section 1 - Section 1 shall contain a list of major assembly drawings which will serve as the first input to lead to drawings of other detail parts.
(b) Section 2 - Fold-out figures shall contain sufficient drawings to augment other chapters. (All journal bearing drawing and rotor assembly drawing shall be included). The equipment variation summary drawing shall be included and may be furnished as an insert page subsequent to shipment of final manuals. Clearance drawing and overhaul report form shall be included. On fold outs prepared by reducing large engineering drawings, lettering smaller than 0.060 inch limit of MIL-M-15071 is permitted provided that the foldouts are legible.

3.30.5 Approval procedures.-

3.30.5.1 Conference on manual outline.- Prior to printing of preliminary manual, turbine manufacturer may request a conference at NAVSEC to review the general outline of the manual and of areas to be covered.

3.30.5.2 Preliminary manual.- The preliminary draft of the technical manual complete with figures and photographs shall be forwarded for approval by no later than 30 days

Downloaded from http://www.everyspec.com

after shipment of first unit. Distribution of the preliminary manual shall be made as follows:

3 copies to NAVSEC for approval
2 copies to the shipbuilder for information and comments (if any) to NAVSEC via cognizant supervisor.
2 copies for information to the Prospective Commanding Officer of each applicable ship; this distribution may be reduced for multi-ship procurements when it is known that delivery of final manuals will be at least 120 days prior to preliminary acceptance trials.

NAVSEC will within 60 days after receipt of manual, (taking into consideration any comments received from the shipbuilder) mark-up one copy of the preliminary technical manual and return it to the turbine manufacturer with comments and directions relating to preparation of final manual.

3.30.5.3 Final manual.- Responsibility for preparing the final manual, delivery requirements, quantity required and distribution shall be as specified (see 6.2.2(1)).

3.31 Technical data books.-

3.31.1 Data categories.- Technical data shall be categorized as shown in 3.31.1.1 through 3.31.1.3.

3.31.1.1 Category I data.- Category I data covers design details.

3.31.1.2 Category II data.- Category II data covers performance.

3.31.1.3 Category III data.- Category III data shall be safeguarded as proprietary data to protect the manufacturer's commercial interests. Each data sheet in this category shall contain caution. "FOR NAVSEC USE ONLY - DO NOT MICROFILM OR OTHERWISE REPRODUCE WITHOUT CONSENT OF (NAME OF MANUFACTURER)---".

3.31.2 Content of data books.- Data books shall contain table VII which was previously furnished as bid data and all data listed in column 7 of figure 14.

3.31.3 Data format and identification.- Data sheets may be typewritten or handwritten and reproduced by photographic or offset methods and shall be contained in paper binders. Cover of binder shall indicate ship application involved. Each sheet shall be dated. A listing of contents (with data listed in order required by figure 14) shall be included.

3.31.4 Submittal of data.- Data books shall be submitted for information as soon after award of contract as available, (but no later than 120 days) and shall be as complete as practicable. Thereafter, data sheets (or pages) shall be submitted as prepared or revised. Distribution shall be in accordance with table IV.

Table IV - Distribution of data books

Data category	NAVSEC (6145) (Direct mail)	Each applicable shipyard	Cognizant SUPSHIPS (for info)	NAVSEC Division Phila., Pa.
I	3	0	0	1
II	3	3	1	1
III	3*	0	0	1

* - Denotes use of registered mail.

3.31.5 List of technical data requirements.- Figure 14 is a composite list of technical data requirements for manuals, technical data books and shows interrelationship with ordering data and bid data.

Downloaded from http://www.everyspec.com

3.32 Reports.- A schedule for submission of the items listed below shall be prepared by the turbine manufacturer and shall be forwarded to the following within 90 days after award of contract:

NAVSEC	-3 copies
Each shipyard concerned	-3 copies
Each supervisor involved	-3 copies

The schedule shall list each item, indicate expected date for submission, and contain a column to be filled in when the item has been completed. Schedule shall be revised as necessary with final submittal to be used as a check on completion of the items involved. Items to be included, as applicable, are as follows:

(a) Drawings listed by title and drawing number if available - (see 3.28.4)
(b) Blade stress data - (see 3.15.2)
(c) Technical data books - (see 3.31)
(d) Manual (preliminary) - (see 3.30.5.2)
(e) Microfilm - (see 3.29)
(f) Vibration test report - (see 4.5.11)
(g) Performance test agenda and report - (see 4.5.12)
(h) Blade vibration test agenda and report - (see 4.5.14)
(i) As-shipped clearances - (see 4.5.3)
(j) Shock stress summary - (see 3.13.3)

3.33 Equipment variations.- Equipment which does not conform to contractual requirements shall be handled in accordance with the provisions of the contract. Other variations, which result in conforming equipment but constitute deviations from the approved configuration, materials or processes, shall be handled in accordance with the procedures set forth hereinafter. Specific examples of these are as follows

(a) Manufacturing errors which necessitate special repair procedures or the use of non-standard repair parts.
(b) An improperly-applied process procedure or a substitute process which does not adversely affect the end use of the part or assembly involved.

3.33.1 Disposition.- Variations which affect installation, operation, performance, maintainability, stock repair parts (onboard and ashore), or interchangeability of parts that would be repaired or replaced during maintenance of the equipment require Government approval.

3.33.2 Conditions for acceptance of parts having variations.- Variations will be approved under the following conditions:

(a) The effect of the variation either as-is or with the part modified is technically acceptable to the Government.
(b) The nature of the part involved is such that replacement is not economically justified.
(c) Where parts involved are normally onboard repair parts, three of each such non-standard parts or sets of parts shall be furnished at contractor's expense, consisting of one of each as onboard repair parts and two of each as stock repair parts.
(d) Where parts involved are normally stock repair parts but not onboard repair parts, two of each such special parts or sets of parts shall be furnished at contractor's expense as stock repair parts.
(e) The repair parts furnished in accordance with (c) and (d) shall consist of the lowest echelon of the parts required to compensate for the variation. For example, the major parts in which the basic error is made need not necessarily be furnished, if a rotor bearing journal is machined undersize necessitating the installation of a non-standard bearing, spare non-standard bearings shall be furnished, but a spare non-standard rotor need not be furnished.
(f) Separate provisioning documentation for non-standard repair parts shall be submitted in accordance with MIL-P-15137. The component involved shall be identified by ship, unit, component serial number, and shown at "NO CHARGE" in the documentation.
(g) An equipment variation summary drawing (see 3.28.3.9) together with certification that resultant special parts have been furnished, shall be submitted for all variations permitted herein under each contract.

Downloaded from http://www.everyspec.com

(h) Where the variation results in additional cost to the government to accommodate a non-standard GFM item, such as additional shipyard costs for installation, the contractor shall reimburse the government for the total amount of such costs involved.
(i) The requirements of (c) and (d) apply only where the variation affects interchangeability.

3.33.3 Procedure for approval of variations.- The following procedure shall be used for approval of variations:

(a) Variations shall be referred to NAVSHIPS/NAVSEC as applicable, for approval via the local Government inspector within thirty days after occurrence. Submittals shall be in the same manner as established for obtaining drawing approval which, on shipbuilder furnished equipment, will require submittal via the shipbuilder and cognizant supervisor. Any work done on equipment with variations prior to obtaining government approval shall be at the contractor's risk.
(b) Each variation shall be accompanied by a letter report containing

(1) The contract number and item involved.
(2) A complete description (including sketch or drawing to scale) of the nature and extent of the variation, including details of the original part and as proposed to be furnished.
(3) The effect of the variation (as corrected) on the performance, endurance, stress levels, and parameters cited in 3.32 including

a. Detailed engineering basis for acceptance.
b. Certification of the part or parts as corrected.

(c) Copies of all correspondence involving repair parts shall be forwarded to Ships Parts Control Center, Mechanicsburg, Pa.,

3.33.4 Workmanship and quality control records.- Machining errors and equipment variations which are not covered in 3.33.1 (such as non-significant and non-critical deviations from drawing dimensions or tolerances for castings, forgings, weldments, connections, or machine-processed parts) do not require approval by either NAVSHIPS/NAVSEC or Government inspector, however, each such deviation shall be documented, and a copy shall be furnished to the local Government inspector. If the inspector considers that the deviation involves contractual requirements or meets criteria in 3.33.1 NAVSEC and the manufacturer shall be notified If NAVSEC agrees with the inspector, the deviation shall be treated in accordance with 3.33.2 and 3.33 3. When a repair restores a part to original drawing dimensions, but involves no change of materials and uses a previously-approved repair process, the local Government inspector shall approve such repair.

3.34 Design approval.- As indicated within this specification, NAVSEC approval is required for a number of general design details and for other specific areas applying to a particular design of turbine to be furnished for a given application. Approvals required and procedures for obtaining approval shall be as specified in 3.34.2 and 3 34 3.

3.34.1 Summary of approvals required.-

3.34.1.1 General design practices.-

(a) Method of protecting 12 chrome rotor journals (see 3.4.1.1).
(b) Substitute materials (see 3.4.2).
(c) Hydraulic gland seal regulator design (see 3.9.1).
(d) Method of locking removable button heads on nozzle control valves (see 3.11.7.5.2).
(e) Acceptance criteria for blade stresses (see 3.15.2).
(f) Details of bottoming studs (see 3.19.2.3).
(g) Means of locking nuts (see 3.19.3.5).
(h) Use of pre-punched shrouding (see 3.24.9.4).
(i) Use of shims in blade installation (see 3.24.10.2).
(j) Method of installing seal strips (see 3.24.12.4).
(k) Exceptions to spare part interchangeability (see 3.27.2)
(l) Repair procedures (see 3.33)
(m) Welding procedures (see 3.17.1).

Downloaded from http://www.everyspec.com

(n) Instrumentation system for blade tests (See 4.5.14).
(o) Procedure for making up steam joint (see 3.20.4.4).

3.34.1.2 NAVSEC approvals required for each design.-

(a) Exceptions to specifications (see 3.3.9).
(b) Use of ductile iron (see 3.4).
(c) Use of power assist and design (see 3.10.2).
(d) Desuperheater design for singling-up (see 3.10.9).
(e) Moisture separator design (see 3.11.5).
(f) Design of cooling sprays for windmilling operation (see 3.12.7.2).
(g) Restrictions imposed for 2 and 3 shafts locked on carriers (see 3.12.7.4).
(h) Blade vibration stress data (see 3.15.2).
(i) Use of shrunk-on wheels (see 3.23.1).
(j) Drawings specified by 3.28.4.
(k) Preliminary technical manual (see 3.30.5.2).
(l) Blade vibration test agenda (see 4.5.14).
(m) Equipment variations (see 3.33).
(n) Requirements for stellite shields on blades (see 3.24.6).

3.34.2 Approval procedures.-

3.34.2.1 General design practices.- Approval of the items listed in 3.34.1.1 are required once and do not require re-approval under each contract. Accordingly, the turbine manufacturer may prepare a booklet of "design practices" and obtain across-the-board approval for these items.

3.34.2.2 Specific turbine designs.- Design approval conferences shall be held to review the overall design. It is intended that drawing approvals be handled concurrently at the conferences to minimize delays and repeated exchange of letters.

3.34.3 Design release conferences.- As soon as practicable after award of contract, the turbine manufacturer shall request a conference at NAVSEC (request to be forwarded via shipbuilder and cognizant supervisor if applicable) for the purpose of obtaining approval of basic design and ordering of material. Areas to be covered at the conference include but are not necessarily limited to the following, however, partial coverage of these items will be considered if necessary to grant timely approval of long lead time components.

(a) Interchangeability of design or parts thereof to previously furnished designs.
(b) Materials of principal parts (minimum of items listed in figure 2) including identification of approved substitute materials proposed.
(c) Basic turbine design features.
(d) Predicted performance.
(e) Arrangement.
(f) Weights.
(g) Specification clarifications if applicable.
(h) Control system.
(i) Need for stellite shields on blades.

3.34.3.1 Data to be furnished prior to conference.- At least 2 weeks prior to the conference, the turbine manufacturer shall forward a proposed agenda with background information regarding items to be discussed. Preliminary drawings (such as the outline and arrangement drawing and assembly drawings), material lists, technical data, and other documentation as necessary to permit review by NAVSEC prior to the conference shall be included.

3.34.4 Design review conferences.- Other conferences shall be held as necessary to approve the final turbine design and to discuss progress or problems that have arisen. As in the case of the design release conference, request for conference shall be made at least 2 weeks prior to the desired date and shall include a proposed agenda with supporting information. It is also intended that NAVSEC comments on drawing submittals be discussed at these conferences.

Downloaded from http://www.everyspec.com

4. QUALITY ASSURANCE PROVISIONS

4.1 Responsibility for inspection.- Unless otherwise specified in the contract or purchase order, the supplier is responsible for the performance of all inspection requirements as specified herein. Except as otherwise specified in the contract or order, the supplier may use his own or any other facilities suitable for the performance of the inspection requirements specified herein, unless disapproved by the Government. The Government reserves the right to perform any of the inspections set forth in the specification where such inspections are deemed necessary to assure supplies and services conform to prescribed requirements.

4.2 Quality program requirements.- The supplier shall provide and maintain a quality program acceptable to the Government. The program shall be in accordance with MIL-Q-9858 and shall be described formally in a quality control manual in sufficient depth to assure that technical and quality requirements will be met. The manual shall be submitted to the Government for determination of acceptability. Such determination will not preclude the request of the Government for additions, refinements or changes when evidence indicates the need for such action. Once the manual has been accepted, any subsequent changes shall be submitted to the Government for review. The contractor shall implement, as a minimum, the program described in the quality control manual. Conformance with these requirements shall not be construed as relieving the supplier of final responsibility to furnish equipment meeting specification requirements. Unless otherwise approved by NAVSHIPS, the Product Inspection type A requirements which will be imposed are as follows:

(a) Overspeed test - (each unit) see 4.5.9 and 4.5.10).-

(1) Verify that contractor's test procedures and instrumentation are adhered to.
(2) Verify vibration data.

(b) Post-test examination (each unit) (see 4.5.2.4, 4.5.4, and 4.5.7).-

(1) Rotor assembly.

a. Verify that blades are properly installed; check conformance to drawing requirements on alignment, pitch and tightness.
b. Verify tenon peening for conformance to requirements; assure absence of cracks and overworked material.
c. Verify radial and end gaps of shrouds for conformance to drawing requirements.

(2) Examine all journals for scoring.
(3) Examine all bearings for damage.
(4) Verify proper assembly of seals and examine for condition.
(5) Examine each row of blades for shroud lift.
(6) Examine throughout for rubbing and damage to internal parts.
(7) Verify that all balance weights are staked in accordance with drawings.

(c) Radiography (each unit) (see 4.4.3).-

(1) Review Ea NDT (radiography) results and make referrals as required for approval to the contractually-designated Government representative.

4.3 Material examination.- Where substitute materials have been approved, examination requirements of the substitute specification shall apply. Examination of materials for parts not specified on figure 2 shall be to the company's specification or standard even though identification by government or technical society specification is required (see 3.28.2.7). The use of materials other than those called for on drawings is permitted on a case basis subject to review and acceptance by the local Government inspector. For parts listed on figure 2, alternate material must have been approved by NAVSEC, and in every case, the material to be used must be such that required factors of safety are met and where applicable, the essential variables of repair welding procedures for the material called for by the drawing remain applicable to the alternate material.

Downloaded from http://www.everyspec.com

4.4 Nondestructive testing - Nondestructive testing methods shall be in accordance with the methods of MIL-STD-271.

4.4.1 Hydrostatic test.- Hydrostatic tests shall be performed for the items shown on figure 15. Test pressure shall be determined as follows except that hydrostatic tests of expansion joints used in crossover pipes may be conducted at a minimum of 1.25 times the maximum operating pressure.

$$P_t = 1.5 \times P_o \times \frac{S_t}{S_o}$$

Where:

P_t = Hydrostatic test pressure (never less than 30 psig nor more than that necessary to produce the minimum yield of the material).

S_t = Allowable stress under test conditions based on ASME boiler code for material used (see section VIII of ASME Boiler and Pressure Vessel Code).

S_o = Allowable stress at operating temperature based on ASME boiler code for material used (see section VIII of ASME Boiler and Pressure Vessel Code).

P_o = Maximum operating pressure (setting of lowest steam generator safety-valve to be used for steam chests, excluding nozzle bowls).

4.4.2 Magnetic particle and dye-penetrant tests.- There shall be 100 percent magnetic particle or dye penetrant testing of all accessible areas for the items shown on figure 15. Acceptance standards shall be in accordance with NAVSHIPS 0900-003-8000 except that note 1 of table II does not apply.

4.4.3 Radiography.- Radiographic inspection shall be conducted for the items shown on figure 15. Extent of coverage shall be as follows:

(a) Casings and steam chests.-
(1) External pressure boundary walls above valve seats (nozzle control and by-pass).
(2) Steam inlet.
(3) Steam chest flange and cover (castings only).
(4) Front wall and first stage shell area (horizontal flange excluded) where inlet pressure to chest is 900 psi or greater.
(5) All fabrication welds in the above areas.

(b) Piping.- 100 percent coverage is required.

Acceptance standards shall be in accordance with table V for castings and NAVSHIPS 0900-003-9000 for welds except that incomplete fusion and penetration is not acceptable. Drawings showing extent of coverage and RT symbols shall be submitted for NAVSEC approval (a separate sketch or drawing properly referenced on the engineering drawings is also acceptable).

4.4.3.1 Radiographic standard shooting sketches.- Shooting sketches in accordance with MIL-STD-271 shall be provided to assist in interpretation of the applicable radiographs; however, approval of the sketches is not required.

4.4.4 Ultrasonic test.- Ultrasonic test shall be conducted for the items shown on figure 15. Specific standards of acceptance shall be established by the turbine manufacturer and shall be submitted for NAVSEC approval.

4.4.5 Exception for piping.- All piping which is furnished in sections which will be fitted and welded to form final assembly by the shipbuilder and which will be hydrostatically tested by the shipbuilder does not require hydrostatic tests by the turbine manufacturer. Drawings shall clearly indicate which piping is to be tested in the field.

Table V - RT inspection standards

THICK-NESS	SHRINKAGE ASTM STANDARD	SHRINKAGE TYPE	SHRINKAGE REFERENCE RADIOGRAPH	POROSITY ASTM STANDARD	POROSITY REFERENCE RADIOGRAPH	INCLUSIONS ASTM STANDARD	INCLUSIONS REFERENCE RADIOGRAPH	UNFUSED CHAPLETS
Less than 1 inch	E186	1 2 3	CA 2 CB 2 CC 2	E186	A2	E186	B2	None Acceptable
1 inch Up to 3 inches	E186	1 2 3	CA 3 CB 3 CC 3	E186	A3	E186	B3	None Acceptable
3 inches and over	E280	1 2 3	Ca 2 Cb 2 Cc 2	E280	A3	E280	B3	None Acceptable

NOTES.

Where ASTM E186 is specified, use the following:

(a) 1 to 2 MEV x-ray films for x-ray sources in this range and lower and for Iridium 192.

(b) Gamma Ray Films for Cobalt 60 sources (and Radium if any).

(c) 10 to 24 MEV x-ray films for x-ray sources in this range.

Where ASTM E280 is specified, use the following:

(a) 10 to 24 MEV x-ray films for x-ray sources in this range.

(b) Cobalt 60 films for other sources.

Downloaded from http://www.everyspec.com

Downloaded from http://www.everyspec.com

4.5 Other examinations and tests.-

4.5.1 Heat stability test.- Requirements of MIL-S-860 apply for rotors except that the maximum deviation (following the second cold reading) of rotors for submarine applications shall not exceed 0.0005 inch.

4.5.2 Blading.- Geometry checks of tenons, vane and roots shall be performed to ensure conformity to drawing requirements.

4.5.2.1 After assembly before shrouding.- After assembly of blading in rotor and before shrouding, blades shall be checked to ensure that they are installed to drawing requirements.

4.5.2.2 After shrouding.- End gaps between shrouded groups and radial gaps (clearance between shroud and blade measured normal to tenon axis) shall be checked for conformance to drawing requirements. Approval of the manufacturer's engineering department is required for either acceptance or re-peening of blading where radial gaps are in excess of 0.010 inch for cylindrical shrouds and 0.015 inch for conical (slant) shrouds. If clearances larger than these values are accepted, the maximum value for each stage so affected shall be recorded on the machinery variation summation drawing (see 3.28.3.9). The shroud shall bear against some portion of the vane of every blade being shrouded.

4.5.2.3 Acceptance test for tenon peening.- The turbine manufacturer shall prepare and submit for information a tenon peening procedure. The procedure shall include standards of acceptance including sectioned pieces showing acceptable and non-acceptable peening. Workmen who will do peening shall each be qualified to the procedure by demonstrating that they can produce a minimum of 5 test pieces representative of normal blade/tenon design in accordance with the standards of acceptance.

4.5.2.4 After shop overspeed test.- Blading shall be examined for indications of deformed tenons, shroud lift (see 4.5.2.2) and other damage.

4.5.3 As shipped clearances.- After completion of the overspeed test, complete clearance data shall be taken and recorded on the overhaul report form (see 3.28.3.3). Bearing crown thickness measurements and depth gage constants are not required to be included since they are stamped on the bearing shells and bearing cap respectively. One copy each shall be forwarded to the cognizant Supervisor and building yard (for the applicable ship).

4.5.4 Bearing and journals.- After completion of the overspeed test, bearings (journal and thrust), thrust collar, thrust shoes, oil deflectors and journals shall be examined for damage. Journals shall not be reworked for appearance only, when it is evident that performance is not affected. Minor scraping of bearings is acceptable. During load or overspeed tests, RTE readings shall be recorded for information and for confirmation of proper installation.

4.5.5 Onboard tools.- All special tools which involve critical fits for proper usage shall be demonstrated by actual use on the turbine for which they are intended unless acceptability can be verified by dimensional checks of the applicable parts. Where special tools involve a procedure not previously used, such procedure shall be demonstrated on the first unit of a given design by using the tools provided.

4.5.6 Threaded fasteners and dowels.- It shall be verified that steam joint bolting has been tightened to specified values in accordance with approved procedures. The use of helical screw thread inserts in accordance MS21208 to compensate for damage threads is acceptable.

4.5.7 Labyrinth packing.- After completion of the overspeed test, diaphragm and gland labyrinth packing rings shall be examined for damage. If damaged, they shall be either repointed or replaced as necessary. If examination of the packing rings during the manufacturing process reveals surface porosity or defects that are not detrimental to the service of the packing, such rings may be accepted on a case basis by the local Government Inspector.

4.5.8 Steam valve tightness test.- The turbine manufacturer shall demonstrate by contact dye checks that valves and seats have a continuous line contact within the seating area.

Downloaded from http://www.everyspec.com

4.5.9 Overspeed test.- Each turbine shall be subjected to an overspeed test to check the strength and rigidity of all parts of the completed assembly and adequacy of internal clearances. Test shall be conducted for a minimum of 15 minutes at a speed 20 percent greater than nominal design full power rpm (see 3.12.2). Lubricating oil used during the test shall have same viscosity as oil in accordance with MIL-L-17331.

4.5.10 Check of overspeed mechanisms.- Speed limiter and overspeed trip settings shall be checked at actuating speeds. Trip shall be checked 3 times and tripping speed shall be repeatable within plus or minus 2 percent.

4.5.11 Vibration test.- Vibration amplitudes at rotational frequency shall be recorded during the overspeed test at selected speeds up to the maximum rpm specified for full power (see 3.12.2). Speeds at which readings are to be taken shall include the rpm corresponding to specified endurance power, rpm at which running critical occurs and other rpms sufficient to obtain a descriptive curve of the vibration levels over the operating range. Maximum acceptable amplitudes, as measured on each bearing cap in the vertical direction, are shown on figure 5. If shaft motions are measured directly by probes on journal or other means, data shall be included in report of vibration results to be submitted to NAVSEC for information.

4.5.12 Performance test.- When specified (see 6.2.2(p)), the manufacturer shall conduct a performance test in accordance with NAVSEC approved agenda (typical agenda is shown on figure 16). Post maneuvering steam rates shall be used in determination of conformance to contract requirements.

4.5.13 Lifting gear.- Lifting gear for each propulsion unit shall be fitted and demonstrated by the turbine manufacturer before delivery to the ship. Inclining of machinery to obtain list or trim effects is not required.

4.5.14 Blade vibration test.- When specified (see 6.2.2(p)), a blade vibration test shall be conducted to determine frequencies and stresses of one selected stage. Stage to be tested shall be as approved by NAVSEC and will be chosen considering calculated stresses, type of vibration mode, size, and similarity to other stages or designs. Test shall be conducted using either the actual turbine or a special test vehicle. Test agenda and instrumentation used shall be as approved by NAVSEC.

4.5.15 Differential expansion.- During the sea trials (preliminary acceptance or builders trials) of the first of a given design, the turbine manufacturer shall make provision for and shall obtain data on the relative axial position of rotor to casing of one L.P. turbine.

4.6 Shipboard tests (by shipbuilder).-

4.6.1 Lifting gear.- Lifting and handling gear shall be fitted to the turbines in the first ship of a machinery class at each building yard. Unbolting the horizontal joint flange is not required for this demonstration.

4.6.2 Singled-up test.- Special piping, blank flanges, valves, desuperheaters, orifices and such other fittings that are required for H.P. and L.P. turbine emergency singled-up operation shall be assembled and bolted in place on each ship. The following operating test is required for the first ship of each turbine design.

(a) H.P. turbine (dockside).- L.P. turbine shall be disconnected from the reduction gear and H.P turbine operated for 1 hour at dockside at the highest practicable power.

(b) L.P. turbine (at-sea).- With H.P. turbine disconnected, the L.P turbine shall be operated at sea for 2 hours at the power corresponding to the normal full power torque developed by the L.P. turbine. Immediately after this operation, the turbine shall be crashed astern, operated at full astern for 30 minutes and then crash ahead to the previously established maximum power and operate at that power for 15 minutes.

4.6.3 Vibration analysis.- During at-sea trails, vertical vibration measurements shall be taken at each bearing cap. At approximately 5 knot intervals at 10 knots and above, readings shall be obtained at steady-state (15 minutes or more) ahead and a curve of vibration amplitude (at turbine rotational frequency) versus shaft rpm for each bearing cap shall be plotted and forwarded to NAVSEC (3 copies) and the ship for information. At least three sets of readings shall be taken at each rpm to ensure that steady state vibration levels have been reached.

Downloaded from http://www.everyspec.com

4.6.4 Performance trials.- The ability of the turbines to meet specified performance will be evaluated during at-sea trials of the ship and will normally include the following:

(a) 4 hours at full power ahead operation.
(b) A maximum of 1 hour at steady state astern speed or power whichever occurs first. For submarines and repeat designs, test will be 1/2 hour duration. Steady state astern may also be limited to the maximum rpm permitted by controllability of ship or rudder.
(c) Quick reversals from full power ahead to full astern and from full astern to full power ahead.
(d) Operation at partial loads including cruising power for sufficient time to check heat balance.
(e) Locked-shaft test.
(f) Trailing-shaft test.

5. PREPARATION FOR DELIVERY

5.1 Turbines, accessories, repair parts and tools.- Packaging, packing and marking shall be in accordance with MIL-P-17286 to the levels indicated below unless otherwise specified (see 6.2.2(q)). Tectyl 511M or equivalent shall be used to preserve the steam sides of the turbines. When shipped, a tag or stenciled note identifying the steam side preservative used shall be attached to the turbine or shipping crate.

(a) Turbines and accessories.- Packaged level A, packed level C.
(b) Repair parts.- Packaged level A, packed level C.
(c) Tools.- Packaged level C, packed level C

5.2 Preliminary technical manual.- Manuals shall be packaged and packed in accordance with Postal department or other carrier regulations.

5.3 Drawings.- Drawings shall be folded not to exceed 8-1/2 inches by 15 inches Packaging and packing shall be to Postal department or other carrier regulations.

5.4 Microfilm.- Aperture and tabulating cards shall be packaged in accordance with commercial practice and in a manner that will afford protection against physical damage during shipment. Cards shall be packed within a close-fitting regular slotted type fiberboard box. Closure shall be in accordance with Postal department or other carrier regulations.

5.5 Sub-contracted material, parts and components.- The packaging, packing and marking requirements of referenced specifications do not apply when material, parts or components will be used to produce the turbine assembly and lose their separate identity when turbines are shipped.

Downloaded from http://www.everyspec.com

6. NOTES

6.1 Intended use.- This equipment is intended for service in Naval ships where it is expected to withstand continuous use for long periods, without benefit of overhaul. The equipment is vital, failure can result in serious interruption of ship and fleet operating schedules.

6.2 Ordering data.-

6.2.1 Specific application.- Since this specification is general in scope, the details listed in 6.2.2 should be specified in the contract or order. (It is not necessary to delete inapplicable portions of the basic specification.)

6.2.2 Detail requirements.-

(a) Title, number and date of this specification.
(b) Type of propulsion unit required (see 1.2). Specify flow arrangement, valve sequencing (if restricted for type III, see 3.5.5.5) and type of moisture separator as applicable.
(c) Materials, if other than specified in 3.4 and required changes (if any) to List of Preferred Material.
(d) Arrangement of propulsion unit (provide applicable contract and guidance drawings) including:

(1) Number of shafts per ship.
(2) Detail arrangement of each propulsion unit if different from each other.
(3) Type of reduction gear.
(4) Type of coupling and clutch (if used).
(5) If turbines are to be resiliently mounted and, if so, state type of mount that will be used and the location and limiting temperatures of non-metallic flexible connections to be used in shipbuilder systems.
(6) Rake of each propulsion unit.
(7) Space and arrangement limitations.
(8) Associated systems as related to turbines.

(e) Type of condenser (fore-and-aft or athwartship) and method of supporting L.P. or single casing turbines (see 3.5.7.3). If condenser serves units other than propulsion turbines, so state and identify.
(f) Weight target or limitations (see 3.3.7).
(g) Shock requirements (see 3.13) including whether-or-not concurrent dynamics analysis is required.
(h) Extraction, induction or reheat points if any (see 3.3.8).
(i) Speed, power, inlet steam conditions, condenser back-pressure, extraction pressure and flow, and required steam rates shall be specified by completing table VI and notes thereto. Identify endurance power.

Downloaded from http://www.everyspec.com

(j) If applicable, specify pressures available for control oil (see 3.10.7.1).
(k) Specify onboard tools and repair parts with changes, (if any) to table V and Figure 11 (see 3.26 and 3.27 respectively).
(l) Specify the following for technical manuals:

(1) Responsibility of turbine manufacturer for final technical manual (see 3.30.5.3).
(2) Quantity of final technical manuals.
(3) Distribution.

(m) If known specify the number of copies of drawings and to whom submitted.
(n) Any other items to be furnished with turbines in addition to those listed in 3.2.2.1.
(o) Specify waivers, revisions and additional requirements including the following areas if applicable:

(1) Special control requirements (see 3.10).
(2) Provision for overspeed protection if other than in 3.10.7.
(3) Structureborne noise levels (see 3.14.1).
(4) Special reports in addition to those required in 3.32.
(5) Regulation for turbine-generator units (see 3.10.8).
(6) Any necessary information, such as intended use of ship that may be of significance to design.
(7) Pitch and roll time cycle (if required) (see table I).

(p) Specify whether or not the following tests are required and, if so, specify responsibilities, agenda, and so forth:

(1) Performance test by manufacturer (see 4.5.12).
(2) Blade vibration test (see 4.5.14).
(3) Shock tests (see 3.13.4).

(q) Specify levels for preparation for shipment if different than required by section 5.
(r) Specify engineering services required to be furnished (see 3.2.3).
(s) Specify any special considerations that will influence award if different than that specified in 6.4.

6.3 Information required with proposal or bid.-

6.3.1 Quantity of bids or proposals.- For NAVSHIPS and NAVSEC procurement five complete copies of bid shall be submitted, unless otherwise stated in ordering data.

6.3.2 Data table.- The bid or proposal shall include a completed data table. Data table shall be as shown in table VII herein. Where data is estimated, so state.

6.3.3 Drawings.- The bid or proposal shall include an outline drawing with dimensions and preliminary turbine longitudinal sectional assembly drawings with materials for principal parts. Drawings shall be to scale.

6.3.4 Other data and statements.- The bid or proposal shall include curves, tabulations, sketches, diagrams, statements and such other data as is indicated in column 5 of figure 14.

6.3.5 List of items to be furnished.- A list of items being furnished is not required if in accordance with the specifications; however, if such a list is included in the proposal or bid, it is mandatory that each item listed be identified with the applicable part of 3.2.2.1 and 6.2.2(n).

Table VI - Ordering data

Column	(1)	(2)	(3)	(4)	(5)	(6)	(7)	(8)
Ship speed (Knots)	Propeller shaft speed (prpm)	Propeller shaft power (SHP)	Steam at turbine inlet		Condenser back-pressure "Hg Abs	Steam rate (#/SH-Hr.) Non-Extr.	Extraction flow #/Hr Press. (Psig)	Remarks (if any)
			Press. (Psig)	Temp. (°F)				
10								
15								
20								
25								
30								
FP ahead								
FP astern								

Notes.
1. Astern torque and flow.- Specify the minimum astern torque at propeller rpm and corresponding maximum allowable steam flow (see 3.12.5.1).
2. Locked-shaft condition.- Specify estimated rpm for driving shaft(s) (see 3.12.7.4).
3. Exhaust pressure variation.- Specify expected variation in exhaust pressure (see 3.12.8.3).
4. Safety valve setting.- Specify lowest steam generator safety valve setting (see 4.4.1).

Downloaded from http://www.everyspec.com

Table VII - Bid data

Ship(s)	Mfgr	Contract NObs.____ PR Nr.____	Mfgr. Reqn. or Order Nr.	Turbine Type ____ Service Class ____	Cost/Shaft $____	LBS/SHP ____ LBS	Date

Unit		Nr of Valves			Stages			Critical Speeds (Turbine RPM)		Weight (lb)		Overall Dimensions		
Turb. or Elem.	Type	Noz.	By-pass	Extr.	Nr. Stgs	SF. DF	Type (Curtis, Rat., Reaction)	Rigid Brg	Running	Access. Total		Length (in)	Width (in)	Height (in)
CR. Turb.	IV													
H P. Turb.	II, IV													
H. P. Elem.	III													
I. P. Elem.	III													
HP-IP Turb.	III													
Single-Cas.	I													
L. P.	II-IV													
Ast. Elem.	All													
Moist. Sep.	II-IV													

Item \ Speed		10 Knots	15 Knots	20 Knots	25 Knots	30 Knots	F. P. Ahead	F. P. Astern
Propeller	RPM							
	SHP							
CR. Turb. 1/	RPM							
	SHP							
Single-Cas. Turb. 1/	RPM							
	SHP							
HP Turb. 1/	RPM							
	SHP							
HP-IP Turb. 1/	RPM							
	SHP							
LP Turb. 1/	RPM							
	SHP							
Ast. Element	RPM							
	SHP							
Inlet Steam	Press (psig)							
	Temp (°F)							
Condenser Flange	"Hg Abs							
	Enthalpy (H)							
Steam Rate 1/	LB/SHP-HR							
Steam Rate 2/	LB/SHP-HR							
Eff 3/	Engine							
Eff 4/	Mech.							

1/ Non-extraction 2/ Steam flow with specified extraction or induction

3/ Theor. SR/Expect. SR. 4/ $100 - \frac{\text{Mech Losses*}}{\text{SHP + Mech Losses}}$ * incl. gear, brg & windage

Bearings (Journal & Thrust) @ F. P.

Locat.	Unit	Type	Brg Size (inches)	Span (inches)	Load (PSI)	Rub. Speed Ft/sec.
Fwd						
Aft						
Thr						
Fwd						
Aft						
Thr						
Fwd						
Aft						
Thr						

PERFORMANCE CURVES AND DATA SHEETS

Mfgr Nr.	Category	Title

Downloaded from http://www.everyspec.com

Downloaded from http://www.everyspec.com

6.3.6 Repair parts interchangeability.- The bid or proposal shall contain a statement as to interchangeability of stock repair parts with other parts either Naval Service or on order.

6.3.7 Exceptions to proposal.- The turbine manufacturer may, for reasons set forth in 3.3.9 either submit a non-conforming bid with exceptions listed, or he may submit a conforming bid and an alternate bid with his exceptions and recommended substitutions contained in the alternate bid.

6.4 Basis of award.- Award will normally be based on the minimum cost for a bid or proposal which meets the specifications; however, special considerations such as performance, improved overall total cost (considering stock repair parts, reliability and previous tests that have been conducted) may be used when so specified (see 6.2.2(s)).

6.5 CHANGES FROM PREVIOUS ISSUE.- THE OUTSIDE MARGINS OF THIS DOCUMENT HAVE BEEN MARKED "#" TO INDICATE WHERE CHANGES (DELETIONS, ADDITIONS, ETC.) FROM THE PREVIOUS ISSUE HAVE BEEN MADE. THIS HAS BEEN DONE AS A CONVENIENCE ONLY AND THE GOVERNMENT ASSUMES NO LIABILITY WHATSOEVER FOR ANY INACCURACIES IN THESE NOTATIONS. BIDDERS AND CONTRACTORS ARE CAUTIONED TO EVALUATE THE REQUIREMENTS OF THIS DOCUMENT BASED ON THE ENTIRE CONTENT AS WRITTEN IRRESPECTIVE OF THE MARGINAL NOTATIONS AND RELATIONSHIP TO THE LAST PREVIOUS ISSUE.

Preparing activity:
Navy - SH
(Project 2825-N003)

Downloaded from http://www.everyspec.com

Item	Action	Frequency
1. Bearings, journal	(a) Check for wear using depth micrometer.	Quarterly
	(b) Disassemble for inspection and take crown-thickness measurement.	At each regular overhaul
2. Bearing oil seals	Inspect general condition and check clearance	When bearing is disassembled
3. Bearings, thrust	(a) Verify clearance.	Semi-annually
	(b) Disassemble, assure collar is secured properly; measure shoe thickness.	At each regular overhaul.
4. Gland packing (removable w/o lifting casing)	Remove; inspect rotor glands and check clearance.	At each regular overhaul.
5. Overspeed limiter and trip	(a) Check operation.	Minimum of quarterly
	(b) Confirm setting.	Annually
6. Turbine internals	Inspect casing and blading that can be sighted for corrosion, erosion, or failures by entering exhaust casing manhole or sighting through inspection openings. Visually examine exhaust casing tie webs and struts for cracked welds.	Anually
7. Turbine rotor	(a) Verify correct axial position by taking total float or other means (see manual)	At each overhaul
	(b) Inspect accessible balance weights of tightness.	At each regular overhaul
8. Valves, by pass, transfer, extraction and drain	Remove valve bonnet, inspect seat and disc to ensure that valve closes tightly. If practicable, tightness may be checked by pressure test.	At each regular overhaul
9. Valves, (nozzle control)	Disassemble for examination of disc, seat, and operating mechanisms.	At each regular overhaul
10. Valve control mechanisms	Ensure proper lubrication	Weekly

Figure 1 - Scheduled maintenance

Downloaded from http://www.everyspec.com

Part or service		Applicable documents	Material and properties	Temperature limit (°F.) (maximum)	Remarks
(a) Antifriction metal		QQ-T-390, grade 2 or 3	Babbitt (tin base)	280°F hot-spot metal temperature	---
(b) Bearing pedestals and caps		QQ-S-691 all classes	Carbon steel and alloy boiler plate	--	See note 1
		MIL-S-15083 Grade B, CW or 70-36	Carbon steel (casting)	--	See note 1
		MIL-S-22698	Carbon steel plate	--	See note 1
		MIL-S-24113	Carbon Manganese plate	--	See note 1
(c) Bearings thrust	(1) Shoes	QQ-S-631 or QQ-S-634	C1015-C1025 carbon steel (bar)		
		QQ-S-635 (SAE 1020)	Carbon steel (plate)		
		QQ-S-691, class A, B C	Carbon steel (boiler plate)		
		MIL-S-890, class B	Carbon steel (bar and forging)		180 degree bend test not required
	(2) Leveling plates	QQ-S-635 (SAE 1020)	Carbon steel plate		
		QQ-S-624	Carbon steel (bar)		
		MIL-S-890, alloy No. 2	Alloy steel forging		Magnetic particle inspection required
	(3) Collar	MIL-S-24093, class A, types I and II	Alloy steel (forging)		Heat treat to 300 BHN

#Figure 2 - Materials

Downloaded from http://www.everyspec.com

Part or service	Applicable documents	Material and properties	Temperature limit (°F) (maximum)	Remarks
(d) Blades and locking pieces	MIL-S-861 class 403 or 410 condition HT (machined) (forged or rolled)	12Cr corrosion-resisting steel (bar and forging)	900	
	MIL-S-861 class 422, condition HT (machined, forged or rolled)	12 Cr corrosion-resisting steel (bar and forging)	1000	
(e) Bolts, studs and nuts (and other screw-thread fasteners) For casing steam joints, valve chest cover, hold down bolts, nozzle blocks and other highly stressed (> 2/3 yield) Structural applications	MIL-S-1222, type I, symbol B7 and type II, symbol H	CR-Mo alloy steel (bar)	775	Magnetic particle Test is not required
		Carbon steel		
	QQ-S-763, class 416 condition T	12 Cr corrosion-resisting steel (bar and forging)	950	
	MIL-S-1222, type I, symbol B16 and type II, symbol 4	Cr-Mo V-alloy steel (bar) Alloy steel (forged or bar)	950	
	MIL-S-861, class 422, condition HT	12 Cr corrosion-resisting steel (bar)	1000	
(f) Casings and steam chests	QQ-S-691, class A, B or C	Carbon steel (boiler plate)	750	See note 2
	MIL-S-15083, grade B or CW	Carbon steel (casting)	750	See note 2
	MIL-S-22698	Carbon steel plate structural	750	See note 2
	MIL-S-870	Carbon-Mo alloy steel (casting)	875	See note 2
	MIL-S-24113	Carbon-Manganese (plate)	750	
	MIL-S-15464, class 1	1-1/4 Cr-1 2 Mo alloy steel (casting)	950	
	MIL-S-15464, class 2	2-1/4 Cr-1 Mo alloy steel (casting)	1050	
	MIL-S-16993 class 2	12 Cr alloy steel (casting)	950	
	QQ-S-766 class 410	12 Cr alloy steel (plate)	900	

Figure 2 - Materials (cont'd)

Downloaded from http://www.everyspec.com

Part or service	Applicable documents	Material and properties	Temperature limit (°F) (maximum)	Remarks
(g) Diaphragms and nozzle blocks (Excluding partitions and shroud rings)	QQ-S-631 condition A	Carbon steel (bar)	750	.35 Max carbon
	QQ-S-691, classes A, B, C	Carbon steel (boiler plate)	750	
	QQ-S-691 classes D and E	Carbon moly and manganese moly	875	
	QQ-S-763, class 405 or 410	12 Cr-Al corrosion resisting steel (bars and forging)	950	
	MIL-S-16993 class 2	12 Cr alloy steel (casting)	950	
	MIL-S-18410 class A	1-1/4 Cr-1/2 Mo alloy steel (bar, billet forging)	950	
	MIL-S-18410, class b	2-1/4 Cr-1 Mo alloy steel (bar, billet, forging)	1050	
(h) Diaphragm and nozzle block partitions and shroud bands	QQ-S-763 class 403 or 410, condition T or class 405	12 Cr corrosion-resisting steel (bar and forging)	950	
	QQ-S-766, class 410	12 Cr-corrosion-resisting steel (plate, sheet and strip)	950	
	MIL-S-861, class 403 or 410 condition HT, or class 405	12 Cr-corrosion-resisting steel (bar and forging)	950	
	MIL-S-861, class 422, condition HT	12 Cr-corrosion-resisting steel (bar and forging)	1000	
	QQ-S-763, class 403, 410 or 416	12 Cr-A, corrosion-resisting steel (bar and forging)	950	Reamed nozzle blocks

Figure 2 - Materials (cont'd)

Downloaded from http://www.everyspec.com

Part or service	Applicable documents	Material and properties	Temperature limit (°F) (maximum)	Remarks
(i) Packing, labyrinth (gland or diaphragm) and stationary seal strips	QQ-S-763, class 410, class 416, (maximum hardness 200 BHN) condition A	12 Cr cossosion-resisting steel (bar and forging)	Use only for 850-950	Seal Strips only
	MIL-C-15345 alloy No. 7	Leaded-nickel-brass, 6 Pb 13 Ni-65 Cu (casting)	850	Sand castings are permitted
	MIL-I-24137, class C	22 percent Ni ductile iron	1000	Centrifugally cast only
(j) Packing springs (flat and coil)	ASTM A434, Ni-Cr-Fe alloy	0.08 carbon (max.) 1.00-1.05 Mo 1.00-2.00 Mn 1.75-2.25 Ti 0.40-1.00 Silicon 0.10-0.5 Vanadium 0.030 (max.) Sulfur 0.35 (max.) Al 0.040 (max) P 0.001-0.01 Boron 13.5-16.0 Cr 24.0-27.0 Ni balance iron	1000	
	JAN-W-562, Inconel-X, spring temper	74 Ni-15 Cr-7 FE, 1 Cb (wire)	1050	
	MIL-N-7786, (Inconel X)	74 Ni-15 Cr-7 FE, 1 Cb alloy (sheet and strip)	1050	
(k) Pins (for notch block and blocking blades)	MIL-S-1222, type I, symbol B16	Cr-Mo-V alloy steel (bar)	1000	
(l) Rotors	MIL-S-860, grade B	Ni-Mo-V steel (forging)	750	
	MIL-S-860 grade E	Ni-Cr-Mo-V alloy steel (forging)	750	
	MIL-S-860, grade G	12 chrome forgings	750	
	MIL-S-860, grade F	Cr-Mo-V alloy steel (forging)	1050	
(m) Shrouding for blading	MIL-S-861, class 403, condition HT	12 Cr-corrosion-resisting steel (strip and bar)	900	180 degree bend test required
	MIL-S-861, class 410, condition AN or HT	12 Cr-corrosion resisting steel (strip and bar)	900	
	MIL-S-861, class 422, condition HT	12 Cr-corrosion-resisting steel (strip and bar)	1000	

Figure 2 - Materials (cont'd)

Downloaded from http://www.everyspec.com

Part or service		Applicable documents	Material and properties	Temperature limit (°F) (maximum)	Remarks
(n) Supports, flexible (for casing)		QQ-S-691, all classes	Carbon steel and alloy grades	To suit service	See note 1
		MIL-S-24113	Carbon manganese steel plate	To suit service	See note 1
		MIL-S-16216	HY-80	To suit service	
(o) Valves control	(1) Disc (poppets and seats)	MIL-S-18410, class a	1-1/4 Cr-1/2 Mo (bar and forging)	950	
		QQ-S-763, class 405 or 410, condition A or T	12 Cr-corrosion-resisting steel (bar and forging)	950	
		MIL-S-18410, class b	2-1/4 Cr-1 Mo (bar and forging)	1050	
	(2) Lift rods and valve stems	QQ-S-763, class 410 or 416, with or without nitriding, condition T	12 Cr-corrosion-resisting steel (bar and forging)	950	
		MIL-S-861, class 422, condition HT	12 Cr-corrosion-resisting steel (bar and forging)	1000	
		MIL-S-23966, class A or B	Alloy steel for nitriding	950 and 850 respectively	VDPH 800 (minimum)
	(3) Bushings	MIL-S-23966, class A or B	Alloy steel for nitriding	950 and 850 respectively	VDPH 800 (minimum)
		QQ-S-763, class 440 with or without nitriding, condition A, B or C	17 Cr-corrosion-resisting steel (bar and forging)	1000	
	(4) Seating surface	MIL-R-17131, type MIL-RCoCr-A	Rod, welding	1050	
Part B - Materials of associated parts					
(p) Expansion joint (cross-over pipe)		MIL-E-17813	As required by referenced specifications	As applicable	
(q) Gland seal regulators		Pneumatic MIL-V-18030			
(r) Piping Main steam		MIL-STD-438			Submarines
		MIL-STD-777			Surface Ships
(s) Steam strainer		MIL-S-21427			For TG sets

#Figure 2 - Materials (cont'd)

Notes to figure 2:

1. Nil-ductility transition temperature shall not exceed +10°F as determined by the method described in ASTM E208. This requirement does not apply to plate thickness less than 5/8 inch or greater than 4 inches. Subject to NAVSEC approval, the use of impact tests may be substituted where there is sufficient statistical data to show correlation between nil ductility properties and impact values.

2. Requirement of Note 1 applies to side support beams of single casing or low pressure turbine which support the condenser (hung-condenser arrangement) and support beams or girders when furnished with the high pressure turbines.

Downloaded from http://www.everyspec.com

Sensing point	Turbine or element for which required	Gages			Thermometers location
		Dial size (inches)	Type gage	Location	
Steam chest	Cruising, single casing, H.P. and HP-IP turbines	8-1/2	Pressure	Main gageboard	(None-use main steam line or strainer temperature)
First stage shell	Single casing and HP turbines and both elements of HP-IP turbines	8-1/2	Compound	Main gage-board	Remote at main gageboard
Exhaust shell	HP and cruising turbines both ends of HP-IP turbines	4-1/2	Compound	Main gage-board	Local on exhaust casing or crossover pipe
	LP turbine (one end of double flow)	(None-use condenser pressure)			Local on inspection cover
LP turbine inlet	LP turbine of single-shaft ship	4-1/2	Compound	Discharge of single-up valve	Local at discharge of desuperheater is used
Shell of last stage in by-pass belt	As applicable	4-1/2	Compound	Main gage-board	None
Each point of extraction	As applicable (See note 1)	4-1/2	Compound	Main gage-board	Local on casing or in piping
Astern inlet bowl	Astern elements (one end of double flow)	8-1/2	Compound	Main gage-board	None

Notes to figure 3:

1. Instrumentation not required for extraction in crossover pipe, used exhaust of adjacent turbine.
2. For saturated cycles, thermometers are not required for steam chest and extraction and induction points; other thermometers are required to permit determination of windage heating.
3. For submarines and nuclear ships, additional instruments may be required for warm-up and local control panels.
4. Each shell, extraction and astern bowl pressure gage will be of standard scale-range having a maximum scale reading of 1-2/3 times the normal operating pressure.
5. For pressure gage connections, the shipbuilder will tee off from existing drain connections wherever possible.

Figure 3 - Pressure and temperature sensing locations (steam)

Downloaded from http://www.everyspec.com

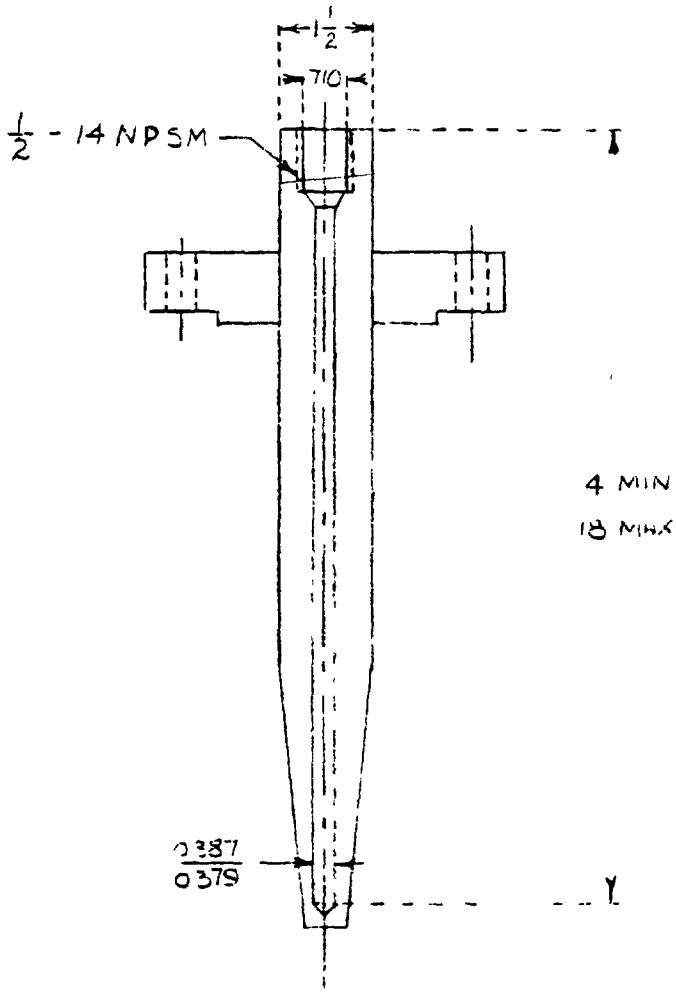

Notes to figure 4:

1. Flange may be integral or welded to well

2. Tolerances: Fractions ± 1/64 Decimals ± 0.010

3. Material: CRES for saturated application, manufacturer's option for superheated application

Figure 4 - Thermometer well.

Downloaded from http://www.everyspec.com

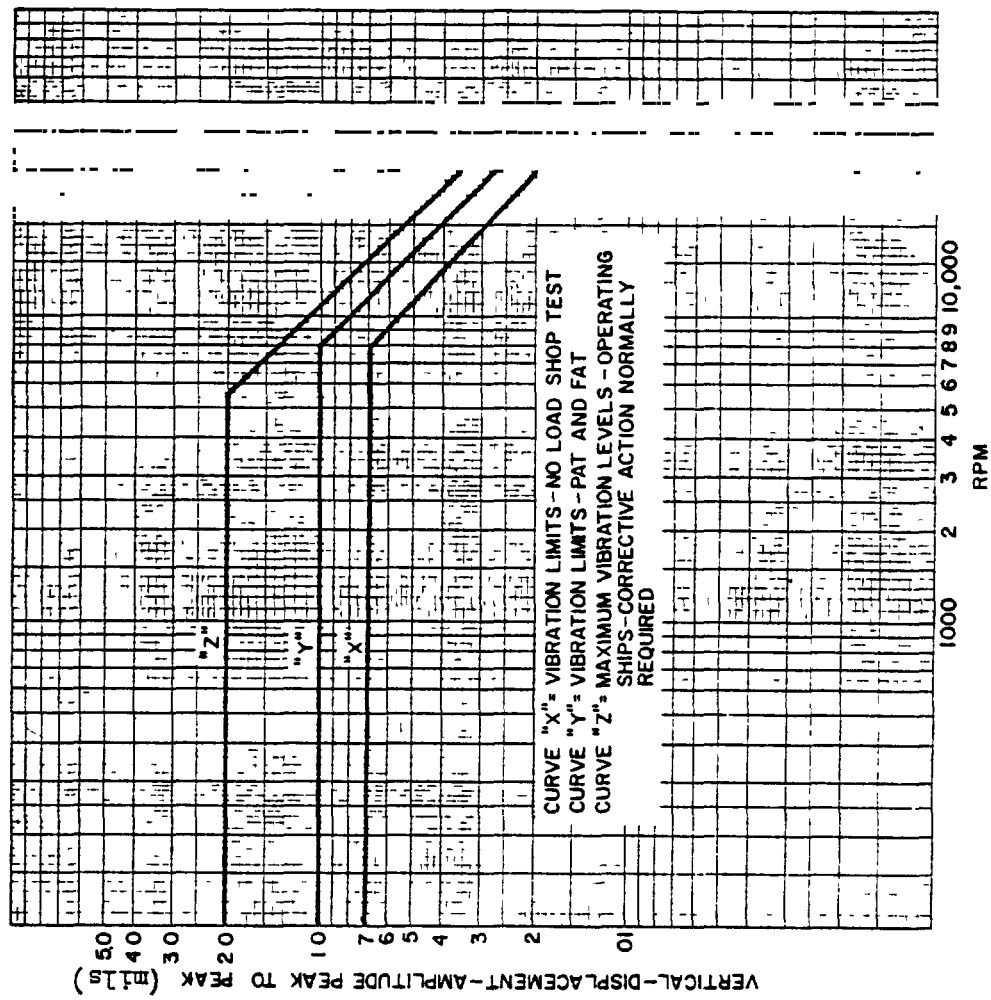

#Figure 5 - Propulsion turbine vibration limits - bearing cap

Downloaded from http://www.everyspec.com

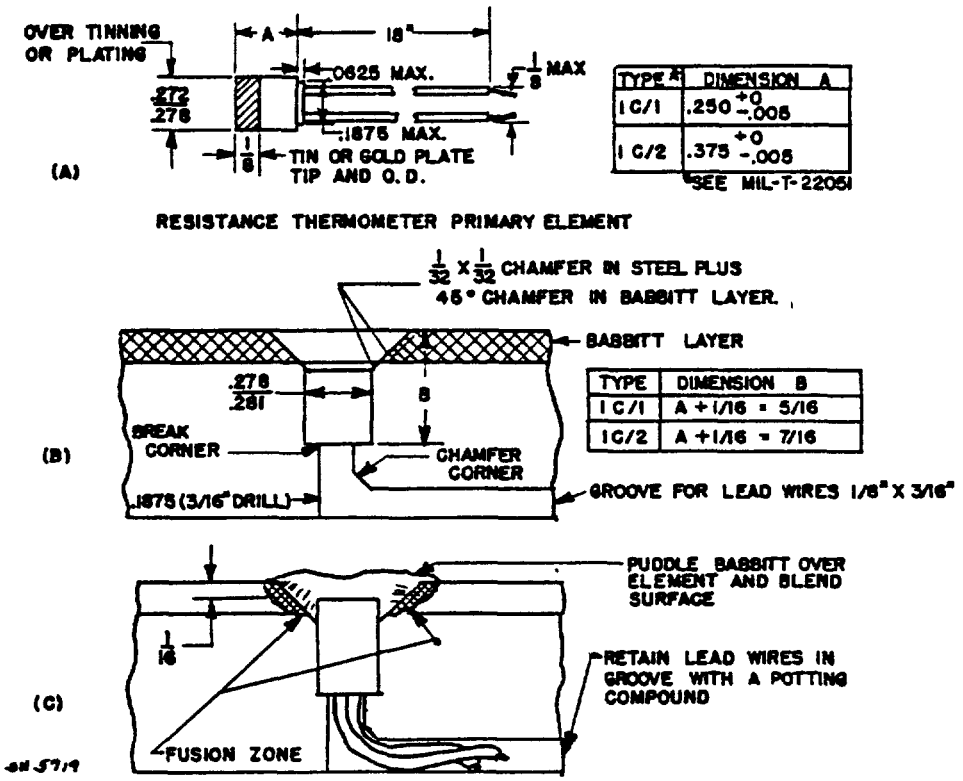

Figure 6 - Typical RTE installation in a bearing

Downloaded from http://www.everyspec.com

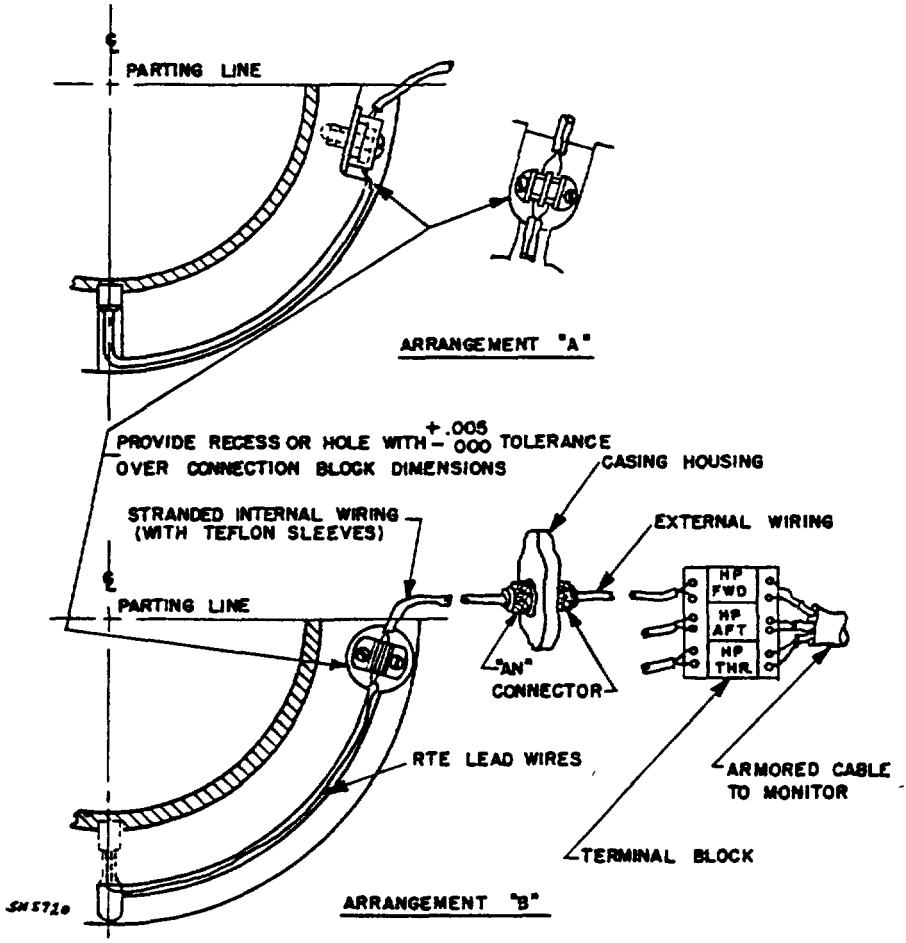

Figure 7 - Suggested RTE installation arrangements in journal bearings

Downloaded from http://www.everyspec.com

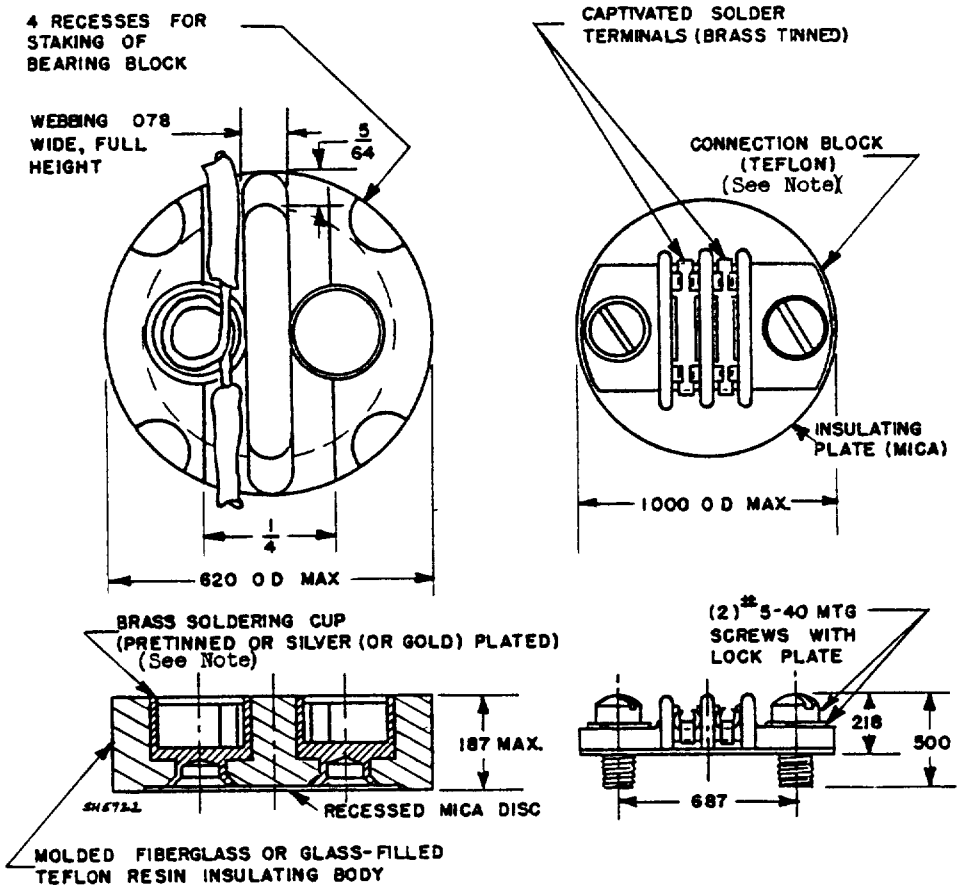

Note to figure 8:

1. Mechanical disconnects of an approved design are preferred to the soldered connections shown.

#Figure 8 - RTE connection blocks

Downloaded from http://www.everyspec.com

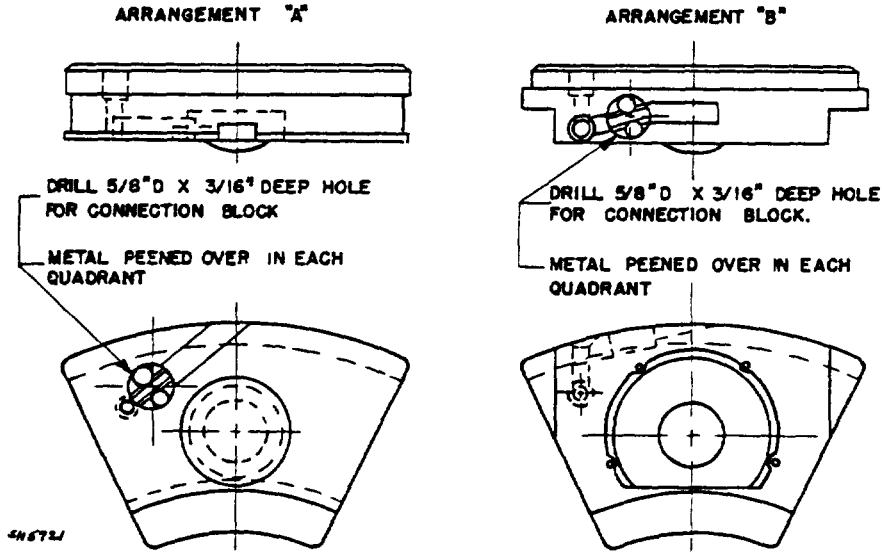

Notes to figure 9 (Arrangement "A"):

1. RTE inserted from babbitted face of shoe (figure 6(c)).
2. Connection block inserted from back of shoe with circumference tangent to RTE lead-wire hole.
3. Back of shoe grooved (Figure 6(b) between connection block and edge of shoe at pivot line.

Notes to figure 9 (Arrangement "B"):

1. RTE inserted from babbitted face of shoe (figure 6(c)).
2. Connection block inserted radially into edge of shoe.
3. RTE lead wires shall be run to connection block through a drilled passageway or grooves on back or edge (or combination of same).

#4. Radial edge of shoe grooved between connection block and edge of shoe at pivot line.

#Figure 9 - Suggested RTE installation in thrust bearing

Downloaded from http://www.everyspec.com

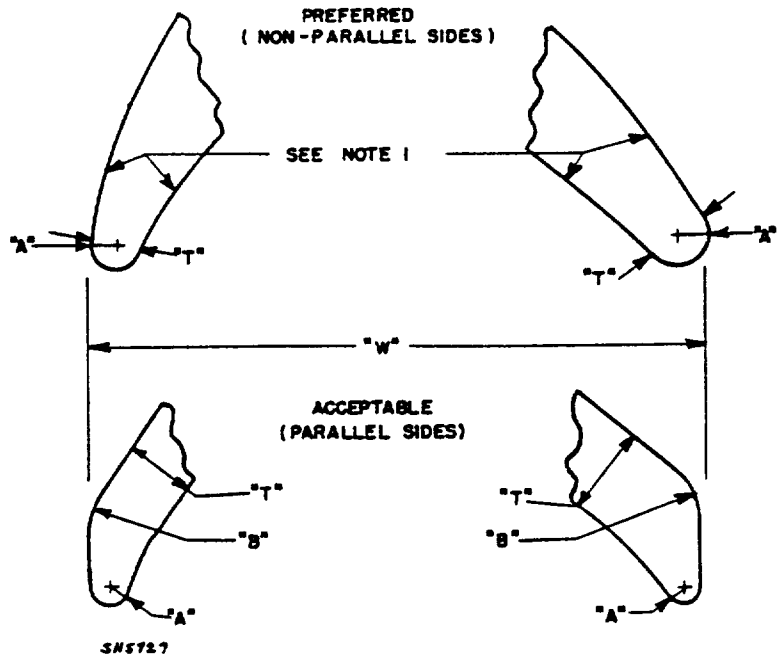

#

Vane width "W"	Min. value of "T"	Min. value of "A"	Radius "B"
Less than 1	0.010	0.005	See note 2
Above 1	.020	.010	

Notes to figure 10:

1. Concave and convex surfaces of diaphragm and nozzle partition shall not be parallel at any point.
2. Radius "B" is not specified quantitatively, but this area shall be polished smooth. A definite break between planes will not be acceptable.

#Figure 10 - Vane metal section (blading and partitions).

Downloaded from http://www.everyspec.com

Item	Part(s) "complete sets" sufficient for one propulsion unit	Quantities of repair parts required based on number of propulsion units per ship (Port and starboard assumed identical)				Factor code (NAVSEC use only)
		1	2	3	4	
1	Bearings, sleeve (see note)	1	1	2	2	E
2	Gaskets (spiral wound)	1	1	2	2	E
3	Gland packing (including springs, spring retainers and pins) - lifting not required to replace	1	1	2	2	E
4	Gland seal regulator wearing and operating parts	1	1	2	2	E
5	Oil deflectors	1	1	2	2	E
6	Oil sight flow glasses	1	1	1	1	K
7	Overspeed mechanism bellows, springs and wearing parts	1	1	2	2	E
8	Rotor position indicator springs and wearing parts	1	1	1	1	K
9	Sentinel valve springs	1	1	1	1	K
10	Steam strainer pressure seal ring and gasket	1	1	2	2	E
11	Thrust bearing shoes, spacers, shims and oil seals	1	1	2	2	E
12	Valve operating gear wearing parts (pins, bushings, couplings, seals, springs, etc.) lift rod bushings and stems are not included	1	1	2	2	E

Note to figure 11:

1. Where bearings are different for port and starboard, a "complete set" of repair parts shall consist of all the bearings necessary to replace all bearings on either propulsion unit.

Figure 11 - Repair parts

Downloaded from http://www.everyspec.com

#

Number of shaft's worth required
(For quantity to furnish, multiply quantity shown in columns 2 to 6 by number required per shaft)

Number of shafts using them	Blading material (see note 1)	Labyrinth packing, lifting not required to replace (see notes 2 and 3)	Labyrinth packing and seal strips, lifting required to replace (see notes 2 and 3)	Nozzle blocks (see note 4)	Nozzle diaphragms (see note 5) and intermediate segments (see note 6)
1	1	1	1	1	1
2	1	1	1	1	1
3	2	1	1	1	1
4, 5	2	1	2	1	1
6	2	2	2	1	1
7	2	2	2	1	1
8, 9	3	2	3	1	1
10-12	3	3	3	1	1
13	3	3	3	2	2
14-15	4	3	4	2	2
16-19	4	4	4	2	2
20	4	4	5	2	2
21-24	5	5	5	2	2
25-29	5	6	6	2	2
30	5	6	7	2	2
31-36	6	7	7	2	2
37	6	7	7	3	3
38-47	6	8	8	3	3
48	6	8	8	3	3
49-50	6	9	9	3	3
51-100	7	10	10	3	3
101-200	8	11	11	4	4
201-400	9	12	12	4	4
Above 400	10	13	13	4	4

Notes to figure 12:

1. Each stock-numbered item of blading consists of 105 percent of all materials necessary to replace one row of rotating or stationary blading. Included, as applicable, are blades, shroud bands, calking, seal strips (if inserted in blade or shroud) locking pieces, screws, pins and any other necessary parts.
2. Each stock-numbered item of packing consists of one complete replacement metallic labyrinth packing ring for use in gland, dummy or diaphragm. Included, as applicable, are a ring, spring(s), retaining ring(s), screws, pins and retaining plates
3. A stock-numbered set of seal strips consists 105 percent of all renewable caulked-in seal strips and lock strips in way of rotating and stationary blading, diaphragms, and nozzle blocks for a complete turbine
4. Each stock-numbered nozzle block consists of all material necessary to effect replacement. Included, as applicable, are the nozzle block (all segments for admission arc), bolts, caulking, and seal strips (if inserted in nozzle block)
5. Each stock-numbered nozzle diaphragm consists of all material necessary to effect replacement. Included, as applicable, are the nozzle diaphragm, seal strips (if inserted in diaphragm), keys, crushing pins, and any other parts other than diaphragm packing
6. Each stock-numbered intermediate segment consists of all material necessary to effect replacement Included, as applicable, are the segment, bolts, seal strips and caulking Blading shall also be included, except when replaceable without damage to segment. Blading so furnished shall not be included with blading material required in column 2.

Figure 12 - Shore based repair parts

Downloaded from http://www.everyspec.com

ITEM	Action to be covered	Validation required
1. ASTERN VALVE	Procedures to inspect valve discs and seats, replace gaskets and springs.	Yes
2. BEARINGS, JOURNAL AND OIL DEFLECTOR	a. Provide maximum allowable clearance.	No
	b. Procedure for installing spherically seated bearings.	Yes
	c. Method of taking depth gage readings including statement that new constants shall be established when bearings are replaced.	No
	d. Method of taking crown thickness measurements.	No
	e. Procedure for replacing an RTE.	No
	f. Procedure for inspecting or replacing bearings. (Including checking clearance)	Yes
	g. Include guidance on checking oil deflectors for blockage of drain passages.	No
3. BEARINGS, THRUST	a. Provide maximum allowable clearances.	No
	b. Procedure for taking thrust clearance.	Yes
	c. Procedure for installing thrust locking device.	Yes
	d. Procedure for inspecting or replacing thrust shoes.	Yes
	e. Procedure for taking total float where applicable.	Yes
4. CLEARANCES	a. Provide guidance on limiting clearance.	No
	b. Procedure for checking axial position of rotor.	Yes
5. CONTROL VALVES	Procedure for inspecting valve discs and seats including setting instructions.	Yes (Assembly procedure only)
6. CONTROL MECHANISMS	a. Procedure for adjustment.	Yes
	b. Procedure for disassembly and reassembly of recommended repair parts	Yes

Figure 13 - Operators maintenance

Downloaded from http://www.everyspec.com

# ITEM	Action to be covered	Validation required
7. GLAND SEAL REGULATORS	a. Procedure for adjustments	No
	b. Procedure for replacing springs and other recommended repair parts	Yes
8. GLAND PACKING (REMOVABLE WITHOUT LIFTING CASING)	a. Provide maximum clearances and guidance as to expected wear patterns	No
	b. Procedure for removing and replacing rings.	Yes
9. OVERSPEED MECHANISMS	a. Procedure for checking set points (include pressure curve for oil impeller).	Yes
	b. Procedure for adjusting set points	Yes
	c. Procedure for replacing springs and other recommended repair parts.	Yes
10. ROTOR POSITION INDICATOR	a. Method of checking for correct setting.	Yes
	b. Procedure for resetting and calibration.	Yes
	c. Procedure for replacing spring.	No
11. SENTINEL VALVES	a. Procedure for manually checking operation without removal from turbine.	No
	b. Procedure for removal and re-installation of spring.	No
12. LUBRICATION	a. Chart showing areas to be lubricated and frequency.	Yes (Comparison)
13. STEAM STRAINERS	a. Procedure for inspecting and cleaning the basket.	No
14. STUB SHAFTS WITH INTEGRAL THRUST COLLAR	a. Removal and installation	No

Figure 13 - Operators maintenance (cont'd)

Data category	Item number	Data description	Ordering data	To be furnished by manufacturer in: Bid or proposal	Manual book	Tech data book	Remarks
(1)	(2)	(3)	(4)	(5)	(6)	(7)	(8)
I	1	Nozzle block (ahead and astern)					
		(a) Number of groups	-	-	-	X	
		(b) Number of nozzles per group	-	-	-	X	
		(c) Throat area per group	-	-	-	X	
		(d) Active arc	-	-	-	X	
	2.	Diaphragms (by stage)					
		(a) Nozzle height	-	-	-	X	
		(b) Nozzle throat area	-	-	-	X	
		(c) Active arc	-	-	-	X	
		(d) Number of nozzles	-	-	-	X	
	3.	Blading (by stage)					
		(a) Blades per row indicating number of gaps	-	-	-	X	
		(b) Mean diameter	-	-	-	X	
		(c) Blade height (excluding root and tenon)	-	-	-	X	
II	1.	Material tabulation	X	X	-	X	Principal parts
	2.	Size and space	X	X	X	-	Outline drawing
	3.	(a) Weight target (total)	X	-	-	-	
		(b) Weight estimate (component) (specific weight)	-	X	-	X	
		(c) Final weights (total and of principal parts)	-	-	X	-	May be shown on drawings
	4.	Extraction and induction pressure and flow data for each point	X	X	X	X	

Figure 14 - List of technical data requirements.

Downloaded from http://www.everyspec.com

Data category	Item number	Data description	Ordering data	To be furnished by manufacturer in: Bid or proposal	Tech manual	Tech data book	Remarks
(1)	(2)	(3)	(4)	(5)	(6)	(7)	(8)
II	5.	Curves for correcting operating (trial) conditions to design conditions	-	-	-	X	See figure 17
	6.	Nomograph, relating expected variations in SHP, PRPM, pressure, temperature, vacuum	-	-	X	-	
	7.	Rotor criticals (rigid bearing and running)	-	-	X	X	
	8.	Tabulation of the following design data for specified ahead and astern steady state conditions.	-	-	X	X	
	(a)	Propeller rpm					
	(b)	SHP/propeller shaft					
	(c)	(Throttle flow (lb./hr))					
	(d)	Inlet steam conditions (pressure and temperature)					
	(e)	Steam rate (lb/SHP-hr)					
	(f)	Horsepower and rpm for each turbine					
	(g)	Stage pressures and temperatures at measured points					
	(h)	Exhaust vacuum, temperature moisture content and enthalpy					
	9.	Tabulation of following data for each bearing.	-	-	-	X	
		(a) Size (diameter and active length)					
		(b) Projected area (in^2) (inside drain grooves)					
		(c) Load (psi) on projected area					
		(d) Oil required (gpm and press) at F.P.					
		(e) Surface speed (rpm) at F.P.					
		(f) Diametral clearance (minimum and maximum)					
		(g) Location and size of orifices					

Figure 14 - List of technical data requirements (cont'd)

Downloaded from http://www.everyspec.com

Data category	Item number	Data description	Ordering data	To be furnished by manufacturer in: Bid or proposal	Tech manual	Tech data book	Remarks
(1)	(2)	(3)	(4)	(5)	(6)	(7)	(8)
II	10.	Operational limitations for principle parameters for which instrumented (pressure, temperature, prpm and so forth) include curves of stage pressures (where measured) VS RPM - (design and limiting values)	-	-	X	-	
	11.	Curves, on a base of SHP over entire operating range ahead, showing					
		(a) Turbine extraction and nonextraction steam rates (including all losses and all gland sealing steam) and flow indicating, valve points and assumed gear efficiencies at design points	-	-	-	X	Include Willans line
		(b) Maximum vacuum the turbines can usefully (and safely) employ	-	-	X	-	
		(c) Gland sealing steam and leakoff quantities (design condition)	-	-	-	X	
		(d) Stage pressures where measured (see figure 4)	-	-	-	X	
		(e) SHP output at each turbine coupling	-	-	-	X	Horsepower values to be based on bull gear output
	12.	Curves, on a base of p.r.p.m. between rated astern and rated ahead conditions showing the following torques during quick reversal from astern to ahead, and vice versa					Indicate flow and bowl pressure for astern torque curve and flow for ahead torque curve
		(a) Available torque at each turbine coupling	-	-	-	X	
		(b) Available torque at bull gear coupling of reduction gear	-	-	-	X	
	13.	Values for the following at specified rated astern conditions					
		(a) Estimated maximum temperature in ahead stage(s) (give location)	-	-	-	X	
		(b) Steam flow and astern torque at zero or specified r.p.m.	X	-	-	X	

Figure 14 - List if technical data requirements (cont'd.)

Downloaded from http://www.everyspec.com

Data category	Item number	Data description	Ordering data	To be furnished by manufacturer in: Bid or proposal	Tech manual	Tech data book	Remarks
(1)	(2)	(3)	(4)	(5)	(6)	(7)	(8)
II	14.	Curves, on the base of P R.P.M. over entire operating range ahead showing:					
		(a) Rate of lube oil circulation required by the turbines and an estimate of the required pressure at the bearing side inlet connections	-	-	-	X	
		(b) Rate of heat removal required from the turbine lubricating oil	-	-	-	X	
	15.	Torsional vibration analysis, curves and data (including WR^2, inertia, stiffness, speeds, etc.) for propulsion turbine-generators only	-	-	-	X	
	16.	Curves, on a base of handwheel and lead screw turns of.					
		(a) Valve lift	-	-	X	X	
		(b) Estimated or actual turbine lead-screw torque	-	-	-	X	
	17.	Mollier charts (FP and endurance power)	-	-	-	X	Show actual state lines
III	1.	Curve of turbine efficiency versus turbine horsepower	-	-	-	X	
	2.	Curves of blade and rotor material rupture strength and creep (0.1 percent) strength versus temperature for 1,000, 10,000, 40,000, 60,000 and 100,000 hours	-	-	-	-	Include with material comparison sheets

Figure 14 - List of technical data requirements (cont'd.)

Downloaded from http://www.everyspec.com

Data category	Item number	Data description	Ordering data	To be furnished by manufacturer in			Remarks
				Bid or proposal	Tech manual	Tech data book	
(1)	(2)	(3)	(4)	(5)	(6)	(7)	(8)
III	3.	Blade and rotor tabulation (by stages) including:	-	-	-	X	
		(a) Stage temperature (metal)					
		(b) Material strength at temperature					
		(c) Minimum factor of safety					
		(d) Maximum or limiting value and direction of stress in rotor section (groove, disc, wheelneck, etc) and blading (tenon, vane, tang, hook, neck, shank, etc)					
		(e) General notes stating: (1) Stresses are direct centrifugal unless otherwise indicated					
		(2) Limiting or maximum stress and safety factors indicated are for rated F.P. ahead and highest prpm, unless otherwise stated					
		(3) Ratio of allowable sheer stress to tensile stress					
	4.	Tabulation (by stages) of the following (0 to 130 percent full power rpm)	-	-	-	X	Number of nozzles per diaphragm, number of blades per shrouded group and number of shrouded groups shall be indicated.
		(a) Frequency evaluation of tangential, axial and torsional modes		-			
		(b) Maximum vibration stress and location (tenon, vane, etc.)					
		(c) Steam bending stress					
		(d) Rpm(s) at which resonance occurs					

Figure 14 - List of technical data requirements (cont'd.)

Downloaded from http://www.everyspec.com

Downloaded from http://www.everyspec.com

PART OR SERVICE	MT/PT	RT	HT	UT	VISUAL
1. Bearing pedestals and cap	X-3	-	-	-	-
2. Thrust bearing collar	X-2	-	-	-	-
3. Blades and locking pieces	X-VA	-	-	-	-
4. Ahead casings and steam chests:					
(a) Below 400 psi	X-3	-	X	-	-
(b) 400 to 900 psi	X-2	X	X	-	-
(c) Above 900 psi	X-1	X	X	-	-
5. Astern casings and nozzle chamber					
(a) Below 400 psi	X-3	-	X	-	-
(b) 400 to 900 psi	X-2	-	X	-	-
(c) Above 900 psi	X-1	-	X	-	-
6. Inner shells and nozzle chambers	X-2	-	-	-	-
7. Diaphragms	X-3	-	-	-	-
8. Nozzle partitions	-	-	-	-	X
9. Packing and packing springs	-	-	-	-	X
10. Packing casings	X-3	-	-	-	-
11. Pins (notch block and locking pieces)	X-1	-	-	-	-
12. Rotors	X-VA	-	-	X-VA	-
13. Shrouding	-	-	-	-	X
14. Fabrication welds in control mechanisms and operating gear	X-3	-	-	-	-
15. Supports, flexible	X-2	-	-	-	-
16. Support girders for HP and LP turbines (Fabrications, welds and castings)	X-2	-	-	-	-
17. Control valves					
(a) Poppets and seats, life rods, valve stems, bushings and lift bars	-	-	-	-	X
(b) Seating surface of valve and seat	X-1	-	-	-	-
18. Expansion Joints (cross-over)	X-3	-	X	-	-
19. Gland seal regulator body (hydraulic type)	X-3	-	X	-	-
20. Pipe: (Steam)					
(a) Below 300 psi	-	-	X	-	-
(b) Above 300 psi	-	-	X	X-VA	-

Figure 15 - Nondestructive testing requirements.

Downloaded from http://www.everyspec.com

PART OR SERVICE	MT/PT	RT	HT	UT	VISUAL
21. Piping welds (Steam)					
(a) Below 300 psi	X-2	-	X	-	-
(b) 300 psi and above	X-1	-	X	-	-
(c) 300 psi and above (4 inches i.p.s and larger)	X-1	X-1	X	-	-
22. Piping and piping welds (Oil)	-	-	X	-	-
23. Weld inlay (for erosion resistance)	-	-	-	-	X

NOTE. 1 Inspections required in figure 15 do not eliminate requirements of applicable material specifications.

MT - Magnetic particle test
PT - Dye penetrant test
RT - Radiographic test
HT - Hydrostatic test
UT - Ultrasonic test

X - Indicates test required
X - Followed by number indicates acceptance level
X - Followed by VA indicates vender levels as approved by NAVSEC

Figure 15 - Nondestructive testing requirements (cont'd.)

Downloaded from http://www.everyspec.com

1. Performance. - Determine steam rate at each valve point, specified endurance power, full power and at ± 5 percent of endurance power. Rerun full power and endurance points after maneuvering and other tests.

2. Maneuvering:
   (a) Determine minimum warm-up time (corresponding to dockside conditions) which will permit unlimited operation of the unit at any power, including F. P. ahead and full astern.
   (b) Conduct crash reversals from ahead full power steady state conditions to full astern steady state and back to full power steady state. (Steady state conditions defined as stabilized temperature less than 5°F change in the turbine.)
   (c) Conduct 24 hour maneuvering test accelerating and decelerating ahead and astern at various power levels.

3. Astern Operation:
   (a) Determine steam rate at astern steady state condition.
   (b) Determine maximum torque capability under specified crash astern conditions.
   (c) Operate astern at specified steady state astern condition until temperatures stabilize in ahead elements.
   (d) Demonstrate 5 minute operation at maximum astern rpm.

4. Vibration. - Determine vibration levels at each brg. cap. (3 directions) during steady state conditions at performance check points.

5. Trailing shaft. - Determine maximum speed at which turbine can be trailed with varying degree of vacuum and at atmospheric condition.

6. Single-turbine operation. - Demonstrate operation of the turbines under singled-up condition. Determine limiting parameters of speed and pressure.

7. Bearings. - Measure temperatures by RTE's in journal and thrust bearings during all tests. Investigate minimum acceptable oil pressures for satisfactory operation. Measure quantity of oil to each bearing inlet. Determine effects of varying inlet oil temperature at 90°, 110°, 120° and 130°F.

8. Vacuum variations. - Determine limiting conditions under less than design vacuum.

Figure 16 - Typical agenda --propulsion turbine tests

Downloaded from http://www.everyspec.com

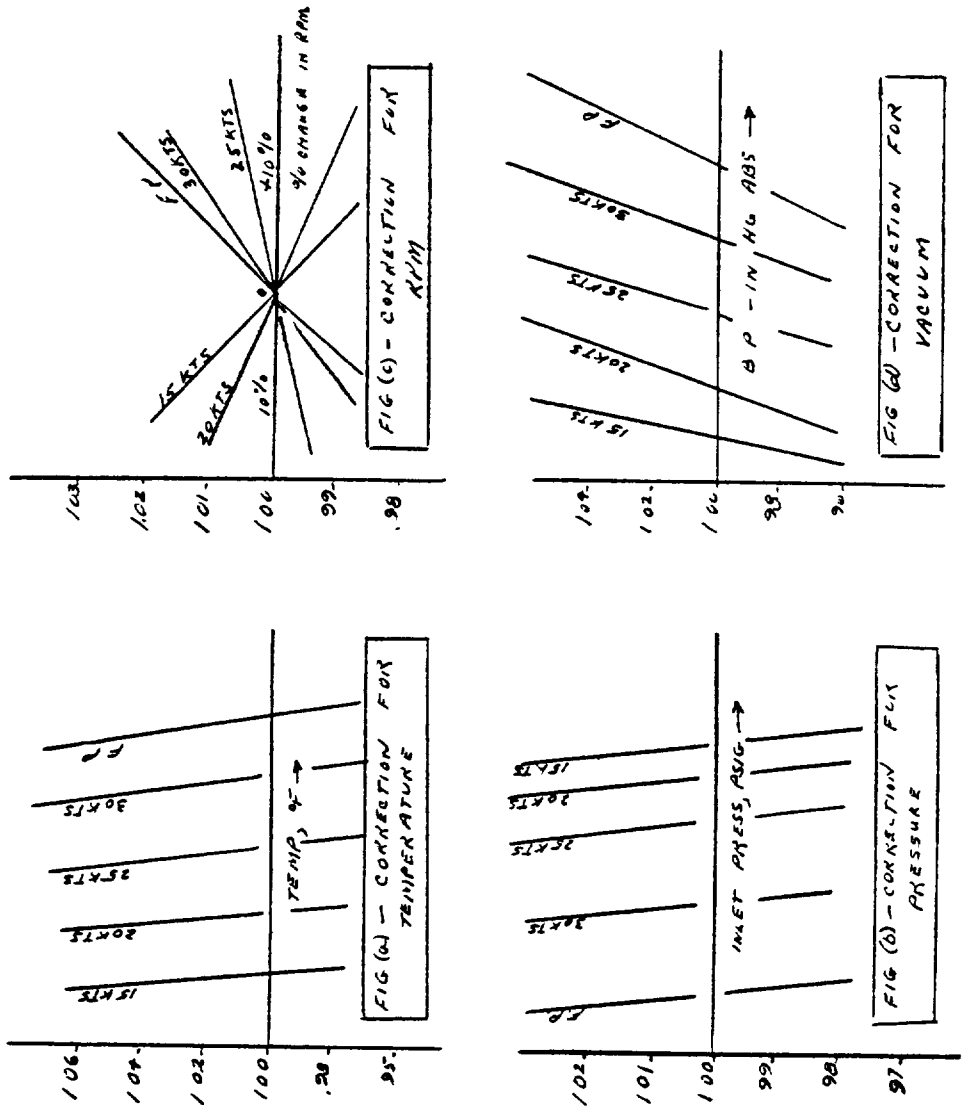

Figure 17 - Correction factors at constant valve settings (non-extraction operation)

Downloaded from http://www.everyspec.com

INDEX

	Paragraph number	Page
Accessibility	3.3.3	6
Agenda for performance test	4.5.12 and figure 16	54 and 86
Ahead operation	3.12.1 and 3.12.2	16
Airborne noise	3.14.8	21
Aperture cards (microfilm)	3.29	42
Applicable documents	2.	1-3
Approval procedures:		
Design	3.34	48
Drawings	3.28.4.2	41
Non-specified materials	3.4.2.2	8
Substitute materials	3.4.2.1	7
Technical manual	3.30.5	45
Variations	3.33.3	48
Arrangement	3.5	8
Assembly drawing	3.28.3.2	39
As-shipped clearances	4.5.3	53
Astern element	3.5.6	9
Astern operation	3.12.5	16
Astern valve	3.10.3.1	12
Back pressure	3.12.8.3	18
Babbitting	3.22.2.11.2	29
Balance weights	3.14.4.3	20
Balancing:	3.14	20
Shop	3.14.2	20
Infield	3.14.4	20
Bar lift (control valves)	3.11.7.5.1	16
Bearing housings	3.20.5	25
Bearing (journal and thrust)	3.22	28
Bearing orifices	3.8.4	11
Bearing temperature limits	3.8.8, 3.8.9 and 3.8.10	11
Bearings (Ball and Roller)	3.10.6.2	13
Bid data	6.3	57
Blade throw-out protection	3.20.18	28
Blade vibration test	4.5.14	54
Blading	3.24	33
Body-bound bolts	3.19.3.4	23
Bolt heaters	3.19.3.9	25
Bolting (requirements)	3.19	22
Bolting for exhaust flange	3.20.9.3	26
Bolting for foundations	3.5.7.6	10
Bolting stress	3.15.3	21
Boroscopic inspection (rotors)	3.23.10	33
Brazing	3.17	22
By-pass turbine:		
External by-pass	3.5.5.3	9
Internal by-pass	3.5.5.4	9
Calking	3.25.6.1	35
Cap screws	3.19.3.7	24
Casing lifting	3.20.10	26
Casings	3.20	25
Cast iron	3.4	6
Chest, stream	3.20.2	25
Chocks	3.5.7.5	10
Class of threads	3.19.2	23
Clearance drawings	3.28.3.3	39
Clearance report	4.5.3	53
Clearances	3.16	22
Compounds for making-up steam joints	3.20.4.4	25
Condenser supports	3.5.7.3	10
Conferences (design)	3.34.3 and 3.34.4	49

Downloaded from http://www.everyspec.com

INDEX, Cont'd

	Paragraph number	Page
Control oil	3.10.7.1	13
Control system	3.10	12
Control system design details	3.10.6	13
Control system strength	3.15.1	21
Control valves (ahead)	3.11.7	15
Correction planes for infield balancing	3.14.4.1	20
Cost	3.3.4	6
Coupling flange	3.5.4 and 3.23.4	9 and 32
Critical speeds	3.23.8	33
Cross-over pipe	3.11.3	15
Crown thickness measurements	3.22.2.14	30
Cruising power (definition)	3.1.9	4
Crush pins (diaphragms)	3.25.1 and 3.27.2	35 and 36
Data, bid	6.3.2	57
Data, technical	3.31	46
Definitions	3.1	4
Deflectors		
Oil	3.22.6	32
Steam	3.20.15	27
Depth micrometer	3.22.2.12	29
Design		
Approval	3.34	48
Release conference	3.34.3	49
Review conferences	3.34.4	49
Detail requirements	6.2	56
Diaphragm removal	3.20.10.2	26
Diaphragms	3.25	35
Differential expansion	4.5.15	54
Dowels	3.19.5	25
Drainage	3.20.13	27
Drawing approval	3.28.4	41
Drawing categories	3.28.1.1	37
Drawing	3.28	37
Assembly	3.28.3.2	39
Clearance	3.28.3.3	39
Gland seal	3.28.3.4	40
Instrumentation	3.28.3.7	41
Lifting arrangement	3.28.3.10	41
List	3.28.3.8	41
Lube oil	3.28.3.5	40
Machinery variation	3.28.3.9	41
Outline	3.28.3.1	38
Valve control	3.28.3.6	41
Ductile iron	3.4	6
Dummy packing	3.21	28
Dynamic analysis (shock)	3.13.5	20
Electric drive (control system)	3.10.8	14
Electrodes	3.17.4	22
Endurance power (definition)	3.1.9	4
Engineering services	3.2.3	5
Equipment required	3.2	4
Equipment variations	3.33	47
Erosion shields (blades)	3.24.6	33
Exceptions		
To proposal	6.3.7	60
To specifications	3.3.9	6
Exhaust flange	3.20.9	26
Expansion joints (cross-over pipe)	3.11.3	15
Extraction	3.3.8	6

Downloaded from http://www.everyspec.com

INDEX, cont'd

	Paragraph number	Page
Fitted (body-bound) fastenings	3.19.3.4	34
Flanged connections (piping)	3.11.2.2	15
Foundation bolting	3.5.7.6	10
Foundation and supports	3.5.7	9
Full power (ahead)	3.12.1	16
Full power (astern)	3.12.5.2	16
Gages (pressure)	3.7.1	10
Gaskets	3.11.1	14
Gears, reduction	3.5.3	8
Girders (support)	3.5.7.1	9
Gland packing	3.21	28
Gland seal and vent systems	3.9	11
Gland seal regulators	3.9.1	12
Gland seal vent and drain diagram	3.28.3.4	40
Government inspector (definition)	3.1.10	4
Grease fittings	3.8.11	11
Handwheel		
Ahead	3.10.5	13
Single	3.10.4	12
Heat rejection (oil)	3.28.3.5.5	41
Heat shields	3.20.16	27
Heat stability test (rotor)	4.5.1	53
Helical inserts	4.5.6	53
Horizontal joint	3.20.4	25
Hot spot temperature	3.7.3	10
Hull fouling	3.12.3	16
Hydrostatic tests	4.4.1	51
Identification plates	3.20.19	28
Induction	3.3.8	6
Infield balancing requirements	3.14.4	20
Inspection:		
Non-destructive	4.4	51
Openings	3.20.12	27
Inspector (definition)	3.1.10	4
Instrumentation	3.7	10
Instrumentation drawing	3.28.3.7	41
Insulation	3.6	10
Interchangeability:		
Repair parts	3.27.2	36
Turbines	3.3.2	6
Intermediate segments	3.24.11	34
Internal bolting	3.19.3.6	24
Inventory control point	3.27.1.1	36
Items furnished:		
By shipbuilder	3.2.2.2	5
By turbine manufacturer	3.2.2.1	4
Jacking bolts for casing	3.20.10.1	26
Joint		
Horizontal	3.20.4	25
Vertical	3.20.6	26
Joint design (welding)	3.17.3	22
Journal:		
Bearings	3.22.2	28
Roundness	3.23.6	32
Labyrinth packing	3.21	28
Lagging	3.6	10

Downloaded from http://www.everyspec.com

INDEX, cont'd

	Paragraph number	Page
Life	3.3.5	6
Lifting gear	3.20.11	26
List of preferred materials	3.4.2.1.1	8
List, of ship	3.12.9	18
Locked shaft operation	3.12.7.4	17
Locking devices (bolting)	3.19.3.5	24
Longitudinal vibration	3.14.6	21
Lube oil flow diagram	3.28.3.5	40
Lube oil temperature limits	3.8.8 and 3.8.9	11
Lubrication system	3.8	11
Machining variations	3.33	47
Magnetic particle tests	4.4.2	51
Maintenance	Figure 1	61
Maneuvering	3.12.6	16
Manuals technical	3.30	42
Margin (power)	3.3.6	6
Markings of parts	3.18	22
Match marks (rotor to casing)	3.23.9	33
Material.		
Comparison sheets	3.4.2.1.2	8
Identification on drawings	3.28.2.7	38
Inspections	4.3	50
Substitutions	3.4.2	7
Materials	3.4 and figure 2	6 and 62
Microfilm	3.29	42
Moisture separation (internal)	3.20.13	27
Moisture separator	3.11.5	15
Nameplates	3.20.19	28
Nil-ductility requirements	Figure 2, notes 1 and 2	62
Nodular iron	3.4	6
Non-destructive tests (NDT)	4.4 and figure 15	51 and 84
Noise (Airborne)	3.14.8	21
Nozzle:		
Blocks	3.25	35
Bowl pressure taps	3.7.6	11
Control valves	3.10.6.1 and 3.11.7	13 and 15
Nuclear steam applications	3.4.1.1	7
Oil deflectors	3.22.6	32
Oil systems (lubrication)	3.8	11
Onboard repair parts	3.27	36
Onboard tools	3.26	35
Operating conditions	3.12	16
Ordering data	6.2	56
Orifices for bearings	3.8.4	11
Outline drawing	3.28.3.1	38
Overhaul report form	3.28.3.3	39
Over-ride feature	3.10.7.5	14
Overspeed.		
Limiter	3.10.7.2	13
Protection	3.10.7	13
System shop test	4.5.10	54
Test of rotors	4.5.9	54
Trip	3.10.7.3	14
Packing:		
Gland, dummy, diaphragm	3.21	28
Journals	3.23.7	32
Peening qualification	4.5.2.3	53
Performance test	4.5.12	54

Downloaded from http://www.everyspec.com

INDEX, cont'd

	Paragraph number	Page
Pins and dowels	3.19.5	25
Piping	3.11	14
Piping reactions	3.11.2.1	15
PIT A inspections	4.2	50
Pitch (of ship)	3.12.9	18
Post heat treatment	3.17.5	22
Power assist (control system)	3.10.2	12
Power:		
Ahead	3.12.1	16
Astern	3.12.5.2	16
Preparation for delivery	5.	55
Preservation	5.1	55
Pressure measurements (steam and oil)	3.7.1, 3.7.2	10
Pressure variations:		
Exhaust	3.12.8.3	18
Inlet	3.12.8.1	17
Propulsion unit (definition)	3.1.8	4
Provisioning list	3.27.4	37
Pumping grooves	3.20.4.5	33
Qualification of welding procedures	3.17.1	22
Qualification of welders	3.17.2	22
Quality assurance provisions	4.	50
Quality control system	4.2	50
Radiography	4.4.3	51
Rake (of ship)	3.5	8
Reactions, piping	3.11.2.1	15
Reheat	3.3.8	6
Reliability	3.3.1	5
Repair of variations	3.33	47
Repair parts	3.27	36
Repair welding	3.17.6	22
Reports	3.32	47
Resonances	3.14.7	21
Roll of ship	3.12.9	48
Rotation	3.5.1	8
Rotor bores	3.23.10	33
Rotor position indicator	3.7.4	10
Rotor spare	3.27.3	36
Rotors	3.23	32
RTE installation	3.22.4	31
RTE temperature limits	3.8.10	11
Seal strips	3.24.12	34
Sealing compound	3.20.4.4	25
Sentinel valves	3.11.6	15
Series parallel turbine	3.5.5.5	9
Shaft identification	3.5.2	8
Shock	3.13	19
Shock stress report	3.13.3	20
Shock test	3.13.4	20
Shooting sketch	4.4.3.1	51
Shrouding	3.24.9	33
Sight flow (bearings)	3.8.7	11
Single casing turbine	3.5.5.1	9
Singling-up:		
Control	3.10.9	14
Operation	3.12.7.1	17
Spare parts	3.27	36
Spare rotor	3.27.3	36
Special tools	3.26	35
Speed limiter	3.10.7.2	13
Stamping of parts	3.18	22
Standardization	3.3.2	6
Stay rods	3.20.17	27

Downloaded from http://www.everyspec.com

INDEX, cont'd

	Paragraph Number	Page
Steam:		
Chest	3.20.2	25
Conditions	3.10.8	14
Deflectors	3.20.15	27
Rates	3.12.4	16
Shields	3.20.14	27
Stellite shields (blades)	3.24.6	33
Stopping capability	3.12.5.1	16
Straight-through turbine	3.5.5.2	9
Strainer, steam	3.11.4	15
Stress criteria and limits	3.15	21
Stud removal	3.19.3.10	25
Studs	3.19.3.7	24
Substitute materials	3.4.2	7
Supports	3.5.7	9
Surface finish:		
Blades	3.24.5	33
Journal bearing babbitt	3.22.2.11.3	29
Nozzle partitions	3.25.2	35
Packing rings	3.21.6	28
Rotors	3.23.5	32
Steam joints	3.20.4.2	25
Thrust bearing parts	3.22.3.7	31
Tap Bolts	3.19.3.7	24
Technical data books	3.31	46
Technical data list	Figure 14	79
Technical manuals	3.30	42
Technical manual approval	3.30.5	45
Temperature:		
Limits (bearings)	3.8.8, 3.8.9 and 3.8.10	11
Measurements	3.7.1 and 3.7.2	10
Variations (steam)	3.12.8.2	17
Template:		
Condenser flange	3.20.9.2.1	26
Coupling flange	3.5.4	9
Tenons (blades)	3.24 8	33
Test connections (casing)	3.20.8	26
Tests	4.5	53
Thermometer wells.		
Oil	3.7.2	10
Steam	3.7.1	10
Thermometers	3.7.1 and 3.7.2	10
Thread engagement	3.19.3.2	23
Threaded fasteners	3.19	22
Throttle valve	3.10.8.1	14
Thrust.		
Bearing	3.22.3	30
Collar	3.22.3.5	30
Shoes	3.22.3.6	31
Torque:		
Ahead handwheel	3.10.5.2	13
Locked shaft	3.12.7.4	17
Stopping	3.12.5.1	16
Torsional vibration	3.14.5	21
Trail shaft operation	3.12.7.3	17
Trials, ship	4.6.4	55
Trim (of ship)	3.12.9	18
Trip (overspeed)	3.10.7.3	14
Types of turbines	1.2 and 3.5.5	1 and 9
Ultrasonic inspection	4.4.4	51

Downloaded from http://www.everyspec.com

INDEX, cont'd

	Paragraph number	Page
Vaccum	3.12.8	17
Valve tightness tests	4.5.8	53
Valve seats	3.11.7.2	15
Valves:		
Ahead control	3.10.6.1 and 3.11.7	13 and 15
Astern	3.10.3.2	12
Sentinel	3.11.6	15
Transfer	3.11.7.1	15
Trip throttle	3.10.8.1 and 3.11.7.1	14 and 15
Variations:		
Equipment	3.33	47
Exhaust pressure	3.12.8.3	18
Inlet pressure	3.12.8.1	17
Inlet temperature	3.12.8.2	17
Machining	3.33	47
Vertical joints	3.20.6	26
Vibration boss (bearing cap)	3.22.2.10	29
Vibration requirements	3.14 and figure 5	20 and 69
Vibration test:		
Sea trials	4.6.3	54
Shop	4.5.11	54
Weight	3.3.7	6
Welding	3.17	22
Welding drawings	3.28.2.8	38
Windmilling operation	3.12.7.2	17
Workmanship	3.33.4	48

Downloaded from http://www.everyspec.com

FOLD

POSTAGE AND FEES PAID

U.S.MAIL

OFFICIAL BUSINESS
PENALTY FOR PRIVATE USE $300

Commander
Naval Ship Engineering Center (Code 6124)
Center Building
Prince George's Center
Hysttsville, MD 20782

FOLD

Downloaded from http://www.everyspec.com

STANDARDIZATION DOCUMENT IMPROVEMENT PROPOSAL

OMB Approval
No. 22-R255

INSTRUCTIONS: The purpose of this form is to solicit beneficial comments which will help achieve procurement of suitable products at reasonable cost and minimum delay, or will otherwise enhance use of the document. DoD contractors, government activities, or manufacturers/vendors who are prospective suppliers of the product are invited to submit comments to the government. Fold on lines on reverse side, staple in corner, and send to preparing activity Comments submitted on this form do not constitute or imply authorization to waive any portion of the referenced document(s) or to amend contractual requirements. Attach any pertinent data which may be of use in improving this document. If there are additional papers, attach to form and place both in an envelope addressed to preparing activity.

DOCUMENT IDENTIFIER AND TITLE

NAME OF ORGANIZATION AND ADDRESS

CONTRACT NUMBER

MATERIAL PROCURED UNDER A

☐ DIRECT GOVERNMENT CONTRACT ☐ SUBCONTRACT

1. HAS ANY PART OF THE DOCUMENT CREATED PROBLEMS OR REQUIRED INTERPRETATION IN PROCUREMENT USE?
   A GIVE PARAGRAPH NUMBER AND WORDING

   B RECOMMENDATIONS FOR CORRECTING THE DEFICIENCIES

2. COMMENTS ON ANY DOCUMENT REQUIREMENT CONSIDERED TOO RIGID

3. IS THE DOCUMENT RESTRICTIVE?

   ☐ YES ☐ NO *(If "Yes", in what way?)*

4. REMARKS

SUBMITTED BY *(Printed or typed name and address - Optional)*

TELEPHONE NO

DATE

DD FORM 1 JAN 72 1426

REPLACES EDITION OF 1 JAN 66 WHICH MAY BE USED

S/N 0102-014-1802