MILITARY SPECIFICATION

SEATS, HELICOPTER CABIN, CRASHWORTHY, GENERAL SPECIFICATION FOR

This specification is approved for use by the Naval Air Systems Command, Department of the Navy, and is available for use by all Departments and Agencies of the Department of Defense.

1. SCOPE

1.1 Scope. This specification established the design requirements for two types, three classes and four sizes of lightweight, folding, crashworthy seats for use by troops/passengers in helicopters.

1.2 Classification. Seats shall be of the following types, classes and sizes, as specified (see 6.2.1):

Type I - Passenger
Type II - Troop

Class A - Forward-facing
Class B - Aft-facing
class c - Side-facing

Size 1 - One-man seat
Size 2 - Two-man seat
Size 3 - Three-man seat
Size 4 - Four-man seat

2. APPLICABLE DOCUMENTS

2.1 Government documents.

2.1.1 Specifications, standards, and handbooks. Unless otherwise specified, the following specifications, standards, and handbooks of the issue listed in that issue of the Department of Defense Index of Specifications and Standards (DoDISS) specified in the solicitation form a part of this specification to the extent specified herein.

Beneficial comments (recommendations, additions, deletions) and any pertinent data which may be of use in improving this document should be addressed to: Engineering Specifications and Standards Department (Code 93), Naval Air Engineering Center, Lakehurst, NJ 08733, by using the self-addressed Standardization Document Improvement Proposal (DD Form 1426) appearing at the end of this document or by letter.

SPECIFICATIONS

FEDERAL

V-T-295	Thread, Nylon.
QQ-C-320	Chromium Plating (Electrodeposit).
QQ-P-416	Plating, Cadmium (Electrodeposited).
QQ-Z-325	Zinc Coating, Electrodeposited, Requirements for.
TT-E-489	Enamel, Alkyd, Gloss (for Exterior and Interior Surfaces).
TT-P-1757	Primer Coating, Zinc Chromate, Low Moisture Sensitivity.
PPP-B-601	Boxes, Wood, Cleated-Plywood,
PPP-B-621	Box, Wood, Nailed and Lock-Corner.
PPP-B-636	Boxes, Shipping, Fiberboard.

MILITARY

MIL-P-116	Preservation-Packaging, Methods of.
DoD-D-1000	Drawings, Engineering and Associated Lists.
MIL-M-3171	Magnesium Alloy, Processes for Pretreatment and Prevention of Corrosion on.
MIL-C-6021	Casting, Classification and Inspection of.
MIL-H-6088	Heat Treatment of Aluminum Alloys.
MIL-W-6873	Welding, Flash, Carbon and Alloy Steel.
MIL-H-6875	Heat Treatment of Steels (Aircraft Practice), Process for.
MIL-R-8236	Reel, Shoulder Harness, Inertia Lock.
MIL-I-8500	Interchangeability and Replaceability of Component Parts for Aircraft and Missiles.
MIL-W-8604	Welding of Aluminum Alloys: Process for.
MIL-A-8625	Anodic Coatings, for Aluminum and Aluminum Alloys.
MIL-W-25361	Webbing, Textile, Polyester, Low Elongation.
MIL-W-45205	Welding, Gas Metal-Arc and Gas Tungsten-Arc, Aluminum Alloys, Readily Weldable for Structures, Excluding Armor.
MIL-C-45662	Calibration System Requirement.

(See supplement 1 for applicable specification sheets.)

STANDARDS

FEDERAL

FED-STD-751	-	Stitches, Seams and Stitchings.

MILITARY

MIL-STD-22	-	Welded Joint Design.
MIL-STD-105	-	Sampling Procedures and Tables for Inspection by Attributes.
MIL-STD-129	-	Marking for Shipment and Storage.
MIL-STD-130	-	Identification Marking of Military Property.

MIL-STD-143	Standards and Specifications, Order of Precedence for the Selection of.
MIL-STD-785	Reliability Program for Systems and Equipment Development and Production.
MIL-STD-810	Environmental Test Methods.
MIL-STD-831	Test Reports, Preparation of.
MIL-STD-882	System Safety Program Requirements.
MIL-STD-889	Dissimilar Metals.
MIL-STD-1186	Cushioning, Anchoring, Bracing, Blocking, and Waterproofing, with Appropriate Test Methods.
MIL-STD-1261	Welding Procedures for Constructional Steels.

HANDBOOKS

MILITARY

MIL-HDBK-5 -	Metallic Materials and Elements for Aerospace Vehicle Structures.

2.1.2 Other Government documents, drawings, and publications The following other Government documents form a part of this specification to the extent specified herein.

CODE OF FEDERAL REGULATIONS

CFR Title 14, Chapter 1, Part 25, Section 853 -	Compartment Interiors.
CFR Title 49, Chapter 5, Part 572 -	Anthropomorphic Test Dummy.

(Application for copies should be addressed to the Superintendent of Documents, Government Printing Office, Washington, DC 20402.)

APPLIED TECHNOLOGY LABORATORY of the US ARMY RESEARCH and TECHNOLOGY LABORATORIES (AVRADCOM)

TR 79-22, Volumes A through E - Crash Survival Design Guide.

(Application for copies should be addressed to the Commander, Applied Technology Laboratory, Fort Eustis, VA 23604.)

US ARMY NATICK RESEARCH AND DEVELOPMENT LABORATORIES

TR 72-51 - The Body Size of Soldiers.

(Application for copies should be addressed to the Commander, US Army Natick Research and Development Laboratories, Natick, MA 01760.)

(Copies of specifications, standards, handbooks, drawings, and publications required by manufacturers in connection with specific acquisition functions should be obtained from the contracting activity or as directed by the contracting officer.

2.2 Other publications. The following document forms a part of this specification to the extent specified herein. The issues of the documents which ar indicated as DoD adopted shall be the issue listed in the current DoDISS and the supplement thereto, if applicable.

SOCIETY OF AUTOMOTIVE ENGINEERS, INC. (SAE)
(Aerospace Material Specifications)

1979 SAE Handbook, Part 2 - Recommended Practice.
Section J211b - Instrumentation for Impact Test.

(Application for copies should be addressed to the Society of Automotive Engineers, Inc., 400 Commonwealth Drive, Warrendale PA 15096.)

(Industry association specifications and standards are generally available for reference from libraries. They are also distributed among technical groups and using Federal agencies.)

2.3 Order of precedence. In the event of a conflict between the text of this specification and the references cited herein, the text of this specification shall take precedence.

3. REQUIREMENTS

3.1 Specification sheets. The individual item requirements shall be as specified herein and in accordance with the applicable specification sheets. In the event of any conflict between requirements of this specification and the specification sheet, the latter shall govern.

3.2 First article. When specified, a sample shall be sujected to first article inspection (see 4.4 and 6.3).

3.3 Design characteristics. In general, the "Crash Survival Design Guide". TR-79-22, volumes A through E, shall be used as a design guide for the seat systems furnished under this specification. The seat shall accommodate the specified type of occupant in the quantities identified for each respective size and orientation (see 1.2). The size I seat is the preferred configuration in order to avoid situations where the energy absorbers of a multi-unit seat are rendered ineffective due to less than full occupancy. To the maximum extent practical, seat classes (see 1.2) shall be interchangeable to enhance standardization. Seating should be aft-facing whenever operational requirements permit. Forward-facing is the next preference. Seating shall not be side-facing unless absolutely necessary for operational considerations. It is desirable that all seats face in the same direction so that the seat backs protect occupants from loose equipment which can become flying projectiles during crash impact. Fabric, netting or a headrest shall be provided for occupant head/neck whiplash protection. The seat system shall incorporate an anti-rebound device (snubber unit) designed to minimize any seat/occupant rebound which may result from the elasticity within the seat system and the resulting lack of structural rigidity due to the stroking process. In the event of a hard landing or rough handling of the seat system, some visual indication of energy absorber stroking, which may have resulted, shall be provided to alert maintenance personnel.

3.3.1 Seating surface. The seat bottom and back shall be designed for comfort and durability. Seat bottoms made of fabric shall be provided with means of tightening to compensate for sagging in use. Sufficient clearance between fabric backs and bottoms shall be provided to preclude body contact with structure when subjected to the specified loads (see 3.6). Fabric tensile strength characteristics shall be sufficient to preclude tearing or complete structural failure when dynamically loaded by the occupant inertial forces resulting from the dynamic test requirements of figure 3. To accommodate back and butt packs that troops may be wearing, the backs of type II seats shall be convertible without tools to provide the recess shown in figure 1. Maximum time to convert either way shall not exceed 10 seconds, and both back supports shall meet the strength requirements.

3.3.2 Crash resistance. The seat shall prevent the 5th through 95th-percentile occupants (see 6.4.1) from experiencing vertical decelerations in excess of human tolerance (see figure 2) during crash pulses of the severity shown in figure 3 and not experience structural failure. Energy shall be absorbed in the vertical axis by load-limiting devices. The energy-absorption stroke shall be the maximum attainable in the space between the seat bottom and the aircraft floor. In any case, not less than 14 inches of vertical stroking distance shall be provided when measured at the occupants center of gravity. The seat and restraint shall minimize occupant submarining (see 6.4.5) and dynamic overshoot (see 6.4.6).

3.3.3 Seat attachment. Acceptable means of attaching seats to the cabin interior are listed below in order of desirability:

a. Suspended from the ceiling with attenuators, and wall stabilized.

b. Suspended from the ceiling with attenuators, and floor stabilized.

c. Ceiling and floor mounted (vertical energy attenuators above and below seat).

d. Wall mounted with attenuators.

e. Floor mounted with attenuators.

3.3.3.1 Attachment distortion. Seat attachments shall be capable of accommodating crash induced cabin distortion consisting of a four (4) inch vertical displacement and a 10° misalignment of any attachment as shown in figure 15 for the floor warpage condition. Figure 16 defines the requirements for the bulkhead attachment condition.

3.3.4 Seat folding and stowing. Seats shall be so designed that they may be quickly removed or folded and secured. Tools shall not be required

.3.3.4.1 Seat disconnect time. The time for sidconnecting each size 1 seat (one-man seat) by one man shall not exceed 20 seconds. The time for disconnecting multi-unit seats by one man shall not exceed 20 seconds multiplied by the seat size number.

3.3.4.2 Folding and stowage. Each seat shall be capable of being folded, stowed and secured or unstowed quickly and easily by one man in a period not to exceed 20 seconds multiplied by the seat size number.

3.3.5 Obstructions. Seat suspension or mounting shall not interfere with rapid ingress or egress. Braces, legs, cables, straps and other structures shall be designed to prevent snagging or tripping. Loops shall not be formed when the restraint system is in the unbuckled position.

3.3.6 Occupant restraint. The seats shall have an integral restraint system with lap belt and shoulder harness for each seating position. The restraint shall be comfortable, light in weight, and easy for the occupant to put on and remove. Reduction in support of the occupant shall not occur due to stroking of the energy absorbers or deformation of the seat.

3.3.6.1 Lap belt. The lap belt anchorage geometry shall be as shown on figure 4. The lap belt anchor fittings shall be attached to the stroking portion of the seat and shall be capable of displacing plus or minus 30 degrees vertically. These fittings shall also be capable of withstanding lateral loads when the webbing is pulling at an angle of plus or minus 60 degrees to the normal plane of the fitting. Lap belt retractors may be used in lieu of adjustors. In any event, lap belts shall be prevented from falling behind or below the seat. Flexible stand-ups shall be provided at the lap belt anchor points to project the lap belt upward and forward 5 inches for each reach. Retractors or adjustors shall not be located over hard points of the occupants skeletal structure. The force required to adjust the webbing length shall not exceed 15 pounds and it shall be possible for the seated occupant to easily adjust with either hand. If retractors are used, they shall not pull with more than 15 pounds force, and shall ratchet in increments not to exceed 0.5 inch.

3.3.6.2 Shoulder straps. Seats shall be provided with shoulder straps. Either the configuration shown in figure 5 or that shown in figure 6 shall be used. The figure 5 configuration is preferred. Shoulder harness anchorage geometry shall conform to figure 7. The anchorage or guide at the top of the seat shall not permit more than 0.5 inch lateral movement of the strap at this point. Distance between the inner edges of the shoulder straps at the seat back shall be within 3 to 5 inches. Flexible guides shall be provided on the seat back as shown on figure 7 to project the shoulder strap fittings up and forward of the seat back for easy reach.

3.3.6.3 Inertia reel. Unless otherwise specified, provision of inertia reel or reels shall be optional. Shoulder strap inertia reel or reels, when specified by mission requirements (such as, a gunner's seat installation), shall pull with not more than 3 pounds force and fully retract the shoulder strap or straps to shoulder height in the guides described above. The reel shall be of a type which remains locked after it locks up initially, and must be manually reset. It is preferred that the reel be designed to lock in an identical manner to the requirements stated in MIL-R-8236, except that the manual control handle shall not be required. After locking, relocking of the reel shall be accomplished by turning or pushing a simple reset device. The reel shall be located close to the shoulder strap guide point at the back of the seat to minimize strap elongation.

3.3.6.4 Restraint buckle. The restraint harness buckle shall be of the quick-release type and shall require intentional motion by the occupant to activate it. The buckle shall be capable of being operated with a gloved hand, as well as with one finger of either hand, while tension equal to the occupant's weight is supported by the harness. The force required to release it normally, as well as after crash loading, shall be not less than 5 pounds nor more than 10 pounds for the lift-lever configuration, nor less than 15 or more than 75 inch-pounds for the rotary buckle configuraiton. Lift latch models shall be equipped with a light-weight lanyard 4-1/2 to 5 inches long. The buckle's mechanism shall not release any of the restraint system components when subjected to the vibration and impact loads described in this specification. The buckle shall also be equipped with a pad attached to its backside to provide a soft interface that distributes loads to the occupant's torso. Lap belt and shoulder strap fittings shall be ejected simultaneously when the lever is lifted, even when there is no load on the restraint straps. The lap belt shall be capable of connection without connecting the shoulder straps. The release buckle shall be guarded to prevent jamming or causing inadvertent release of the mechanism by clothing or equipment worn by the seat occupant.

3.3.7 Headrest. The seat system shall contain an appropriate headrest assembly consisting of a padded structure or as a minimum, a fabric or netting configuration which shall be designed to provide protection of the occupant from potential head/neck whiplash injury.

3.4 Construction.

3.4.1 Critical members. All structural members shall be fabricated from as ductile a material as possible and preferably of materials whose elongation is in excess of 10 percent. In the interest of saving weight, critical tensile and bending members, which, because of other design considerations, cannot be allowed to appreciably deform plastically, may be designed of higher strength materials having elongations as low as 4 percent for very thin (less than 0.030 inch thick) sheet materials. In all cases, the system shall be designed to avoid brittle failure.

3.4.2 Dissimilar metals. Unless components are suitably protected against electrolytic corrosion, contact between dissimilar metals shall not be used where it is feasible to avoid it. Dissimilar metals are defined in MIL-STD-889.

3.4.3 Castings. Castings used in the seat shall conform to MIL-C-6021.

3.4.4 Heat treatment. Heat treatment of aluminum and steel parts shall conform to MIL-H-6088 and MIL-H-6875, respectively-

3.4.5 Structural connections. Safety factors shall be 5 percent and 10 percent for shear and tensile bolts, respectively. Bolts less than 0.25 inch in diameter shall not be used in tensile applications. Riveted joints shall be designed in accordance with MIL-HDBK-5. Welding shall be in accordance with MIL-W-6873, MIL-W-8604, MIL-W-45205, MIL-STD-22 and MIL-STD-1261.

3.4.6 Joining and fastening. Fittings and joints requiring disassembly for maintenance shall be bolted. All thread and stitching used for sering the seat back and seat bottom shall be in accordance with V-T-295 and FED-STD-751, type 301., respectively.

3.4.7 Standard parts. MS or AN standard parts shall be used wherever they are suitable for the purpose.

3.4.8 Restraint construction.

3,4.8.1 Stitch pattern and cord size. Stitch pattern and cord size shall sustain a minimum of 100 pounds per inch of stitch length, and shall apply with figure 8.

3.4.8.2 Wrap radius. The wrap radius shall be the radius of the fitting over which the strap is wrapped at the buckles and anchorages, as shown on figure 9. The strap wrap radius shall be not less than 0.062 inch.

3.4.8.3 Hardware-to-strap folds. Figure 10 illustrates a recommended method to reduce the weight and size of attachment fittings by folding the strap at an anchorage buckle fitting.

3.4.8.4 Surface roughness of fittings. Fittings in contact with the straps shall have a maximum surface roughness of RMS-32.

3.5 Weight. The complete seat of each size, including the restraint, shall not exceed the weights tabulated below:

Size of seat	Weight (lbs)
1	15
2	30
3	45
4	60

3.6 Structural strength and deformation. Longitudinal, lateral and upward seal structural strenght and deformation requirements are based on the 95th-percentile clothed occupant weight of 242 pounds (see 6.4.2) plus the weight of the seat and any equipment attached to or carried in the seat. Downward seat structural strength and deformation requirements are based on the effective weight of the 50th-percentile clothed occupant plus the weight of that portion of the seat which must stroke during vertical crash force attenuation. Table I lists the applicable weights and load factors. Seat deflections shall be controlled to limit occupant contact with surrounding structure.

3.6.1 Forward load. The seat shall have a static forward load deflection curve measured along the longitudinal (roll) axis of the aircraft which rises to the left and above the base area and extends into the acceptable seat failure area shown on figure 11.

3.6.2 Aftward load. The seat strength shall be sufficient to withstand a load factor of not less than 12.0 for aftward loads measured along the longitudinal (roll) axis of the aircraft.

3.6.3 Lateral load. The seat shall have a static lateral load deflection curve measured along the lateral (pitch) axis of the aircraft which rises to the left and above the base curve and extends into the acceptable seat failure area shown on figure 12.

3.6.4 Downward load. Human tolerance to vertical impact limits the allowable forces along the vertical axis of the aircraft and necessitates energy attenuation. The seat shall have a downward load-deflection curve measured along the vertical (yaw) axis which falls within the acceptable area on figure 13. After the seat has stroked through the available stroking distance, the seat bottom shall be supported on the floor. Type I seat attenuators shall be sized for a normally clothed individual, and type 11 seat attenuators shall be sized for a combat equipped soldier in accordance with table I.

3.6.5 Upward load. The seat shall have sufficient strength in an upward direction to withstand a load factor of not less than 8.0 parallel to the vertical axis.

3.6.6 Restraint design loads. Strength and elongation properties of the restraint shall conform to table II.

3.7 Materials. When specifications and standards are not specifically designated, selection of materials and processes shall be in accordance with MIL-STD-143. Materials that are nutrients for fungi shall not be used when it is feasible to avoid them; where used and not hermetically sealed, they shall be treated with fungicidal agent.

3.7.1 Flammability and toxicity. Materials which support a self-sustained combustion, and materials which, when burned or exposed to high temperatures give off toxic fumes, shall not be used. All seat fabrics and cushions must be flame resistant and produce the least amount of smoke and toxic gases possible. Interior materials in all military aircraft shall meet the flammability criteria specified in Code of Federal Air Regulation (FAR) part 25, section 853.

3.8 Reliability. Because of the emergency requirement of the seat system, prime importance shall be placed upon the attainment of a high overall degree of reliability. A reliability program shall be established in accordance with MIL-STD-785. As a part of the reliability analysis, the contractor shall conduct a failure mode effects and criticality analysis (FMECA) for each seat system component and subsystem which could, by failing, adversely affect the crash survival of the occupant. Documentation shall be provided as stipulated on the Contract Data Requirements List (CDRL), DD Form 1423 (see 6.2.2). Except for fabric parts, the minimum life of all seat components subjected to normal wear and tear shall be 5,000 hours of aircraft operation and 5,000 adjustments. Deterioration and wear of fabric parts shall be limited so as to meet minimum strength requirements after 5 years of use, and possess shelf life of not less than 30 years.

3.9 Maintainability. The seat shall require no scheduled maintenance other than the replacement of fabric components. The mean time to repair for both scheduled and unscheduled maintenance shall be less than 0.2 manhours.

3.9.1 Interchangeability and replaceability. Parts and assemblies of the seat shall be interchangeable or replaceable in accordance with MIL-I-8500.

3.9.2 Tools. Maintenance operations shall not require uncommon tools or special equipment.

3.10 Environmental resistance. The seat with restraint system shall be capable of operating and of meeting the structural requirements of 4.6.2 after exposure to the following conditions:

3.10.1 Temperature. The seat shall deliver the specified operational and crashworthiness performance when subjected to the 4.6.4.1 and 4.6.4.2 temperature tests.

3.10.2 Sunshine. All nonfabric materials shall show no evidence of any degrading effect when subjected to the 4.6.4.3 sunshine test.

3.10.3 Humidity. The seat shall withstand the humidity test specified in 4.6.4.4.

3.10.4 Fungus. If any material utilized in the construction of the seat is suspected to be a nutrient to fungi, the material shall show no deterioration when subjected to fungus tests in accordance with 4.6.4.5.

3.10.5 Salt fog. All materials used in the construction of the seat shall withstand the salt fog test of 4.6.4.6.

3.10.6 Dust. The seat shall be capable of satisfactory operation after exposure to the dust test-specified in 4.6.4.7.

3.10.7 Vibration. The seat shall be capable of satisfactory operation after being subjected to the vibration tests of 4.6.4.8. The occupied and unoccupied seat shall be free of resonance within the frequency range of the aircraft in which it will be used and no amplification shall occur.

3.10.8 Mud. The seat shall be capable of satisfactory operation after the 4.6.4,9 test.

3.11 Dimensions. Seats shall comply with the dimensions shown in figure 1. Unless otherwise specified, a tolerance of ± 1/16 inch will be allowed for seat overall dimensions. Restraint system webbing dimensions shall comply with table 11, figures 5 and 6. The seat package, when it is in the stowed position, shall be held to a minimum size, not to exceed a thickness of 6 inches.

3.12 Finish.

3.12.1 Surface roughness. All exterior surfaces of the seat and restraint shall be free from any sharp edges or corners; and any other projection sthat could scratch the hands or damage the clothing of the occupant.

3.12.2 Finishes. Aluminum alloy parts shall be anodized in accordance with MIL-A-8625, type 11. Magnesium alloy parts shall be treated in accordance with MIL-M-3171. Corrosive steel parts shall be either cadmium-plated in accordance with QQ-P-416; zinc-plated in accordance with QQ-Z-325; or chrome plated in accordance with QQ-C-320.

3.12.3 Paint. The paint finish shall consist of one coat of zinc-chromate primer conforming to TT-P-1757; followed by two coats of enamel conforming to TT-E-489.

3.12.4 Color. The seat and restraint system color shall be specified by the acquiring activity and shall be in accordance with the cabin color scheme specified for the aircraft in which the seat will be used.

3.13 Identification of product.

3.13.1 Seat identification. A nameplate, permanently and legibly filled in with the following information, shall be securely attached to a permanent portion of the seat in a position capable of being read after the seat is installed. Marking shall be in accordance with MIL-STD-130 in 1/8 inch letters and numerals.

Seat, Helicopter Cabin

Type (I or II, as applicable)

Class (A, B or C, as applicable)

Size (1, 2, 3 or 4, as applicable)

MIL-S-85510(AS)

National stock no.

Manufacturer and code

Contract or order no.

Serial number

US property

3.13.2 Restraint identification. Each individually replaceable strap shall have a permanent label attached. Each label shall contain the following information:

National stock number

Manufacturer and code

Part number

Date of manufacture

Retirement date

Serial number

3.13.3 Energy absordber identification. Each individually replaceable and/or exchangeable energy absorber (load limiter) mechanism shall have a pemanent label attached. Each label shall be marked in accordance with MIL-STD-130 and shall contain the following information:

Manufacturer’s name or trade mark

Manufacturer’s part no.

Manufacturer's serial no.

Contract or order no.

National stock no.

MIL-S-85510(AS)

3.13.4 Warning marking. The following warning shall be stenciled in 1/2 inch letters on the front of the seat back:

W A R N I N G
DO NOT STOW
EQUIPMENT
UNDER SEAT

3.14 System safety. Maximum effectiveness and conservation of military resources dictate a need for early identification, evaluation, and correction of system hazards. A system safety program shall be established by the contractor in accordance with MIL-STD-882 and implemented as directed by the acquiring activity. The goal of the program shall be to insure that the optimum degree of freedom from hazard is effectively designed into the seat system. Documentation in support of the system safety program shall be prepared by the contractor and made available to the acquiring activity in accordance with CDRL, DD Form 1423 (see 6.2.2). Data shall consist of a system safety program plan and a system safety hazard analysis report.

3.15 Workmanship. The seat, including all parts, shall be constructed and finished in a thoroughly workmanlike manner. Particular attentio shall be given to neatness and thoroughness of welding, riveting, machine-screw assemblies, painting, freedom of parts from burrs and sharp edges, unraveled edges of cloth and straightness of stitched seams.

3.16 Drawings. The contractor shall provide drawings in accordance with DOD-D-1000 as stipulated by the CDRL, DD Form 1423 (see 6.2.2).

3.17 Contractor's specifications. The contractor's specifications shall be available to the acquiring activity as stipulated by the CDRL, DD Form 1423 (see 6.2.2). In the event that changes in the specification are required after Government approval, the contractor shall prepare documentation in the form of a “Notice of Revision/Specification Change Notice" in accordance with CDRL, DD Form 1423 (see 6.2.2).

3.18 Configuration management. The crashworthy helicopter cabin seat system furnished in accordance with this specification shall be developed and produced under a system of configuration management. In accordance with the CDRL, DD Form 1423 (see 6.2.2), the contractor shall prepare and make available to the acquiring activity a configuration management plan which defines the contractor’s techniques of configuration management. In the event that engineering changes, deviations, and waivers are proposed after establishment of the configuration identification, the

contractor shall document such proposals arid requests in accordance with the CDRL, DD Form 1423 (see 6.2.2).

4. QUALITY ASSURANCE PROVISIONS

4.1 Responsibility for inspection. Unless otherwise specified in the contract or purchase order, the supplier is responsible for the performance of all inspection requirements as specified herein. Except as otherwise specified in the contract or order, the supplier may use his own or any other facilities suitable for the performance of the inspection requirements specified herein, unless disapproved by the Government. The Government reserves the right to perform any of the inspections set forth in the specification where such inspections are deemed necessary to assure that supplies and services conform to prescribed requirements.

4.1.1 Interim test plans and procedures. The interim test plans and procedures used for conducting first article testing and quality conformance testing shall be prepared by the contractor and made available to the acquiring activity in accordance with the CDRL, DD Form 1423 (see 6.2.2) for approval 60 days prior to the start of testing. The test details, such as fixture design, performance characteristics to be measured, failure criteria, sensor type and location, instrumentation description, test facility description etc., shall be part of the test procedures described in the respective test plans.

4.1.2 Interim test data and reports. All interim test data and test results/analysis shall be made available to the acquiring activity in accordance with the CTRL, DD Form 1423 (see 6.2.2). Test reports shall be prepared in accordance with MIL-STD-831. The data required by this specification and its subordinate specifications and standards has been requested in order to enable the Government acquiring activity to assess the conformance of the proposed crashworthy helicopter cabin seat system to the requirements of 3.3, 3.4, 3.5, 3.6, 3.7, 3.8, 399, 3.10, 3.11, 3.12, 4.4 (4.6) and 4.5 of this specification.

4.2 Inspection conditions. Unless otherwise specified, all inspections shall be performed under ambient environmental conditions.

4.3 Classification of inspections. The inspections specified herein are classified as follows:

a. First article inspection (see 4.4).

b. Quality conformance inspection (see 4.5).

* 4.4 First article inspection. The first article inspection shall consist of all the examinations and tests specified under 4.6. Four seats of each type, class and size are required for these examinations and tests as a minimum. The contractor shall be responsible for preparation of a detailed “first article inspection test plan” which shall be delivered to the acquiring activity for approval. In addition, a complete report of the test results shall be submitted to the acquiring activity. In the event of any failure during the first article inspection test phase, the contractor shall be responsible for any redesign, rework and retest of the seats. Complete retests shall not be required providing the contractor can show that the seat changes in no way effect the result of prior tests. Successful completion of these tests shall not relieve the contractor of the responsibility of correcting any subsequent discovered deficiency or discrepancy in the seat.

4.4.1 Test articles. The contractor shall take precautions to ensure that the test articles receive no special care and, accordingly, are representative of articles which will be produced by the established production techniques, processes and procedures.

4.4.2 Test article reuse. No seat system, subsystem, or components thereof, may be reused in testing without the prior concurrence of the Government acquiring activity. If the contractor has reason to believe that the test articles might be reused successfully, the components shall be identified to the acquiring activity with an explanation describing why the contractor considers reuse feasible. The contractor shall bear full responsibility for any failure resulting from reuse of components or subsystem.

4.5 Quality conformance inspection. Quality conformance examinations and tests shall consist of the following:

a. Visual examination.

b. Component sampling of energy absorbers.

4.5.1 Visual examination. Sampling shall be in accordance with MIL-STD-105, inspection level II for the critical defects listed in table 111, and inspection level I for the minor defects. The acceptable quality levels are 1.5 and 2.5 percent defective, respectively.

4,5.2 Component sampling of energy absorbers. Energy absorbers (load limiters) of each type used on the seat system in the quantities specified below shall be randomly selected and subjected to a static load-deflection test intended to verify functional force-deflection profile and to demonstrate compliance of the devices to the specified limit-load tolerance range of ± 10 percent of the design limit-load value.

a. Five (5) energy absorbers (load limiters) of each type from each lot of 200 or fraction thereof.

b. Ten (10) energy absorbers (load limiters) of each type from each lot of 500 or fraction thereof above 200.

c. Ten (10) energy absorbers (load limiters) of each type from each additional lot of 500 or fraction thereof above 500.

The rejection rate for each of the above sampling conditions (a, b, c) shall be zero failures. These units shall have been destructively tested and therefore, shall not be released for service use.

4.5.3 Accuracy of test apparatus. The accuracy of instruments and test equipment used to control or monitor the test parameters, whether located at a Government testing laboratory or at the contractor's plant, shall be verified (at least every 12 months, preferably once every 6 months, unless contractor procedures prepared to satisfy the requirements of MIL-C-45662 for calibration cycle of specific instruments specify otherwise) to the satisfaction of the acquiring activity. All instruments and test equipment used in conducting the tests specified herein shall:

a. Conform to laboratory standards whose calibration is traceable to the prime standards at the National Bureau of Standards.

b. Have an accuracy of at least one-third the tolerance for the variable to be measured. In the event of conflict between this accuracy and a requirement for accuracy in any one of the test methods of this specification, the latter shall govern.

c. Be appropriate for measuring the test parameters.

4.5.4 Data acquisition and reduction. Data acquisition and reduction shall comply with the 1979 SAE Handbook, part 2, section J211b entitled, "Instrumentation for Impact Test", for measurements of anthropomorphic dummy, body accelerations, and structures. The method recommended for use in establishing the acceptability of the pulse and to determine other parameters associated with the data, such as rise time, onset slope, and acceleration plateau duration is described in 6.4.8 of this specification.

4.5.5 Lot. An inspection lot shall consist of energy absorbers (load limiters) manufactured under essentially the same conditions and from essentially the same materials and components and offered for inspection at one time.

4.5.6 Rejected lots. If an inspection lot is rejected, the manufacturer may rework it to correct the defects or screen out the defective units and resubmit for reinspection. Resubmitted lots shall be inspected using tightened inspection and shall not thereafter be tendered for acceptance unless the former rejection or requirement of correction is disclosed. Such lots shall be separate from new lots and shall be clearly identified as reinspected lots.

4.6 Methods of examination and test.

4.6.1 Fit, function and design conformance examination. Representative seats of the required type(s), class(es) and size(s) shall be furnished and installed in the applicable aircraft. The seats shall then be inspectred for conformance to 3.3, 3.4, 3.5, 3.7, 3.9, 3.11, 3.12, 3.13 and 3.14. Occupants representing 5th and 95th-percentile passengers or troops as applicable with and without combat assault equipment shall be used to demonstrate satisfactory restraint system uses seat accommodations, and lack of encumbrances during ingress and egress. Occupants shall wear warm-weather, intermediate-weather, and cold-weather clothing for each of the demonstrations. For troops, medium rucksacks and butt packs with combat assault loads shall be demonstrated. Ingress, hookup and egress shall be timed for each combination of clothing, equipment and personnel percentile. Times for seat installation, disconnect, folding, and stowage shall also be measured. The contractor shall prepare and make available to the acquiring activity a test plan and test report in accordance with the CDRL, DD Form 1423 (see 6.2.2), which document the testing procedures and test results of the fit, function and design conformance examination.

4.6.2 Structural tests. Each seat of the required type, class and size shall be tested as a complete unit and shall be mounted in a suitable fixture by using the normal seat system to aircraft structure tie-downs. The fixture shall be representative of the aircraft's surrounding structure and spring rate to a degree which is economically feasible for test purposes; adverse effects of actual test fixture hardware shall be addressed within the specific test plan and report.

Additionally, for both the static and dynamic tests, attachments shall be distorted per 3.3.3.1 prior to load application. The seat shall then be subjected to, and satisfactorily withstand the loads specified in 4.6.2.1 and 4.6.2.2 while maintaining the aforementioned seat-to-aircraft attachment distortion. The supplier may substitute the additional dynamic test series described in figure 18 for the static tests (number 2, 4, 5 and 6) described in table I with prior approval of the Government, However, under no circumstances are test numbers 1 and 3 of table I to be omitted from the first article inspection series.

4.6.2.1 Static tests. The occupant restraint shall be tested with rest of the seat during the static tests specified in table I. In addition, the lap belt and shoulder harness shall be statically tested separately to determine compliance with table 11, thereby insuring that all components possess the required elongation and strength margin. The static test loads shall be applied through a body block which is contoured as shown in figure 14. The body block shall include representations of the neck, the shoulders, and the upper legs. (Articulation of the upper legs has been found to be necessary in order to relieve interference problems resulting from the application of the required loads through a rigid structure to a stroking seat system.) The loads shall be applied while the load-deformation performance of the seat is recorded. Lateral and longitudinal deflections shall be measured from the seat pan (see figures 11 and 12). Vertical deflections shall be measured from the occupant center of gravity. Total static test load to be applied, for all directions, shall be determined by multiplying the required design load factor specified in table I by the sum of the effective occupant and seat weights. The contractor shall prepare and make available to the acquiring activity appropriate test plans and test reports in accordance with the requirements of 4.1.1 arid 4.1.2 and the CDRL, DD Form 1423 (see 6.2.2).

4.6.2.2 Dynamic tests. Dynamic first article tests of the seat shall be conducted to the conditions specified in figure 3 and the seat shall evidence no loss of structural integrity. The seat shall retain the dummy occupant within the confines of the safety harness and shall evidence no loss of structural integrity. Any failure of a restraint system component or of a primary load-carrying member of the seat shall be unacceptable. A primary load-carrying structural member is defined as a nonredundant member that if failed would allow uncontrolled motion of the seat and produce injurious secondary impact hazard to develop.

The energy absorption mechanism shall limit the acceleration measured on the seat pan or in the dummy to a value which stays within the acceptable pulse duration of figure 2.

A 50th-percentile anthropomorphic dummy complying with the Code of Federal Regulations, Title 49, Part 572, specification for dummies, should be used to simulate the seat-system occupant for test 1. A 95th-percentile anthropomorphic dummy simulating as closely as possible the features of the 50th-percentile dummy described above should be used to simulate the seat-system occupant for test 2. Refer to table IV for the appropriate occupant weight parameters representing the 95th and 50th-percentile occupants, respectively.

The contractor shall prepare and make available to the acquiring activity a dynamic test plan and test report in accordance with the requirements of 4.1.1 and 4.1.2 and the CDRL, DD Form 1423 (see 6.2.2).

4.6.3 Reliability tests. Components subjected to motion, such as fold hinges, belt buckles, and webbing adjustors shall be subjected to cycling tests (5000 cycles minimum) to demonstrate conformance to 3.8. The contractor shall document test procedures and test results of the reliability testing phase in the first article inspection test plan described in 4,4 and as specified in the CDRL, DD Form 1423 (see 6.2.2).

4.6.4 Environmental tests. At least one seat shall be subjected to each of the following environmental tests in the order listed. Upon completion of enviromental tests, the seat shall be examined for operational capability and subjected to and pass test I of figure 3. One additional energy absorber of each type used on the seat shall be environmentally tested and subsequently stroked to verify functional force-deflection profiles.

The contractor shall document test procedures and test results of the enviromental test phase in the first article test plan and report described in 4.4 and as specified in the CDRL, DD Form 1423 (see 6.2.2).

4.6.4.1 High temperature. High temperature tests shall be conducted in accordance with method 501, procedure I and II of M1L-STD-810.

4.6.4.2 Low temperature. Low temperature tests shall be conducted in accordance with method 502 of MIL-STD-810. The test temperature shall be -65°F.

4.6.4.3 Sunshine. Sunshine tests shall be conducted in accordance with procedure I, method 505 of MIL-STD-810.

4.6.4.4 Humidity. Humidity tests shall be conducted in accordance with method 507, procedure I of MIL-STD-810.

4.6.4.5 Fungus. If any material utilized in the construction of the seat system is suspected to be a nutrient to fungi, the material shall be tested in accordance with method 508 of MIL-STD-810.

4.6.4.6 Salt fog. Salt fog tests shall be conducted in accordance with method 509 of MIL-STD-810.

4.6.4.7 Dust. The seat system shall be subjected to the dust test specified in MIL-STD-810.

4.6.4.8 Vibration. Vibration tests shall be conducted in accordance with method 514, procedure I (parts 1, 2 and 3) of MIL-STD-810.

4.6.4.9 Mud. All exposed surfaces shall be coated with mud and the seat must operate before and after it has dried.

4.6.5 Restraint system tests. The restraint system shall be subjected to the following tests to show compliance with table II prior to being installed in a seat system for testing. At the conclusion of each test, the buckle shall be activated to ensure that permanent deformation did not occur preventing release of harness. The contractor shall document test procedures and test results of the restraint system testing phase in accordance with the requirements of 4.1.1 and 4.1.2 and the CDRL, DD Form 1423 (see 6.2.2).

4.6.5.1 Webbing tests. All webbing shall be tested in accordance with MIL-W-25361 to show compliance with table II.

4.6.5.2 Hardware tests. All restraint system hardware shall be tested as follows:

a. Buckle release tests. The shoulder straps and lap belts shall be connected to the buckle around a static body block in the correct position for normal use. The body block shall be loaded such that each tensile load condition specified below exists in each respective component.

Component	Condition A Load	Condition B Load
Lap belt	100 ± 10 pounds	1 pound
Shoulder harness	100 ± 10 pounds	1 pound

The buckle shall then be opened and the force required to activate the release mechanism shall be measured. This sequence shall be repeated 50 times for each condition. For the rotary buckle, the rotation necessary to release the straps shall be 30 to 45 degrees from the starting position. The torque necessary to operate the release mechanism for each condition shall be 15 to 75 inch-pounds and the force required for the lift latch type shall be between 5 to 10 pounds. The release arc for the lift latch shall be no greater than 90°.

b. Buckle fitting release test. Mount buckle on a fixture with all fittings fully engaged and no load (including that which might be applied by the weight of the webbing) applied to them. Manually actuate the buckle's release mechanism and visually inspect that all fittings were released from the buckle's late-hing mechanism. Then release the mechanism. The straps should be able to be pulled free from the buckle. This sequence shall be repeated 50 times.

c. Inertia reel test. If applicable, the inertia reel shall be tested in accordance with MIL-R-8236, if not a Qualified Products List (QPL) item. When specified by the acquiring activity to meet specific mission requirements, the inertia reel shall be tested in accordance with MIL-R-8236, if not a Qualified Products List (QPL) item.

d. Lap belt assembly test. The lap belt shall be tested as an assembly. The lap belt anchors (end fittings) shall be attached to fixtures (one fixed and one movable) and webbing lengths adjusted to fit a 95th-percentile occupant. The test shall be started from an initial preload of 100 pounds. The fixtures shall be separated at a rate of 2 in./min. The elongation and applied load shall be measured continuously or at intervals not to exceed 0.5 inch of elongatin. If load-

elongation readings are not continuous, a reading shall be taken specifically at the design load of 4,000 pounds. Loading shall continue to failure. Pointers shall be affixed to the webbing, as close as possible to the end fitting, and shall be monitored during the test. Structural failure of any component or elongation in excess of 10 percent at a load equal to or less than 4,000 pounds design load shall be unacceptable.

e. Shoulder harness assembly test. The shoulder harness assembly shall be tested with the inertia reel in a “locked” position and attached to a suitable fixture. The shoulder harness end fittings shall be “plugged” into the buckle and the buckle shall be attached to a movable fixture. The webbing lengths shall be adjusted to fit a 95th-percentile occupant. The test shall be started from an initial preload of 100 pounds The. fixtures shall be separated at a rate of 2 in./min. The elongation and applied load shall be measured continuously, or at intervals not to exceed 0.5 inch of elongation. If load-elongation readings are not continuous, a reading shall be taken specifically at the total design load of 4,000 pounds. Loading shall continue to failure. Load-elongation data shall be recorded for both total elongation, including elongation of webbing on the reel spool, and free webbing length exclusive of elongation of webbing on the reel. Pointers shall be affixed to the webbing, as close as possible to the reel spool and on the movable fixture, and shall be monitored during the test. Structural failure of any component or elongation in excess of 10 percent exclusive of elongation of webbing wrapped around the reel spool at a load equal to or less than the 4,000 pound design load shall be unacceptable. Elongation of the free length of harness shall be computed by subtracting the elongation measured within the reel from the total. In the event that an inertia reel is not specified as a component of the shoulder harness assembly, the test procedure shall be conducted with the appropriate seat back/shoulder harness attachment fittings replacing the inertia reel unit.

f. Adjuster tests. Each different adjuster in the harness Each different adjuster in the harness assembly shall be tested as follows:

(1) Adjustment load. With no load other than the adjustment reaction load, webbing shall be drawn through each adjuster at a rate of 20 ± 2 in./sec and the adjustment force measured. The adjustment force shall not exceed 30 pounds. This test shall be repeated 20 times.

(2) Abrasion test. With no load other than the adjustment reaction load, webbing shall be cycled through its adjuster 5,000 times. The webbing shall then be tested to demonstrate that it can still withstand the design load stated in table 11, and that no slippage of the webbing occurs at the adjuster due to abrasion. The test shall be conducted for each different webbing/adjuster combination.

g. Buckle tests. Cycle the buckle release with fitting insertions 5,000 times followed by test a and d above.

5. PACKAGING

5.1 Preservation and packaging. Preservation and packaging shall be level A or C, as specified (see 6.2.1).

5.1.1 Level A. Each seat shall be preserved and packaged in accordance with MIL P-116, method 111, in a weather-resistant container conforming to PPP-B-636.

5.1.2 Level C. Each seat shall be preserved and packaged in a manner that will afford adequate protection against corrosion, deterioration and physical damage during shipment from the supply source to the first receiving activity for immediate use. This level may conform to the supplier's commercial practice, provided the latter meets the requirements of this level.

5.2 Packing. Packing shall be level A, B or C, as specified (see 6.2.1).

5.2.1 Level A. Seats preserved and packaged as specified in 5.1.1 shall be packed in overseas-type shipping containers conforming to PPP-B-601 or PPP-B-621. A far as practicable, shipping containers shall be of uniform shape, size and minimum cube and tare consistent with the protection required, and contain identical quantities. The gross weight of each shipping container shall not exceed the weight limitation of the specification. Containers shall be closed and strapped in accordance with the above specifications and appendices thereto.

5.2.2 Level B. Seats preserved and packaged as specified in 5.1.1 shall not be overboxed for domestic shipments. The container, closed and strapped in accordance with the applicable appendix of the container specification, shall be the shipping container.

5.2.3 Level C. Seats shall be packed in a manner that will afford adequate protection at the lowest rate against damage during direct domestic shipment from the supply source to the first receiving activity and are destined for immediate use at that activity. This level shall conform to applicable carrier rules and regulations and may be the supplier's commercial practice, provided the latter meets the requirements of this level.

5.3 Physical protection. Cushioning, blocking and bracing shall be in accordance with MIL-STD-1186, except for domestic shipments. Waterproofing requirements for cushioning materials and containers shall be waived when preservation, packaging and packing designed for immediate use of the item, or when drop tests of MIL-P-116 are applicable.

5.4 Marking. Interior packages and exterior shipping containers shall be marked in accordance with MIL-STD-129.

6. NOTES

6.1 Intended use. The seats covered by this specification are intended for use by troops and passengers in helicopters, and to provide crash survival for most of these occupants in the majority of crashes.

6.2 Ordering data.

6.2.1 Acquisition requirements. Acquisition documents should specify the following:

a. Title, number and date of this specification,

b. Type, class and size of seat required (see 1.2).

c. Seat and restraint system color (see 3.12.4).

d. Component sampling tests of energy absorbers to be performed (see 4.5.2).

6.2.2 Data requirements. When this specification is used in an acquisition which incorporates a DD Form 1423, Contract Data Requirements List (CDRL), the data requirements identified below shall be developed as specified by an approved Data Item Description (DD Form 1664) and delivered in accordance with the approved CDRL incorporated into the contract. When the provisions of DAR 7-104.9 (n) (2) are invoked and the DD Form 1423 is not used, the data specified below shall be delivered by the contractor in accordance with the contract or purchase order requirements. Deliverable data required by this specification is cited in the following paragraphs.

Paragraph no.	Data requirements	Applicable DID no.
3.8	Failure modes effects and criticality analysis	DI-R-7085
3.14	System safety program plan	DI-H-7047
3.14	System safety hazard and analysis report	DI-H-7048
3.16	Drawings, engineering and associated lists	DI-E-7031
3.17	Specification, product specification	DI-E-ll04A
3.17	Notice of revision/specification change	DI-E-1126A
3.18	Configuration management plan	DI-E-2035
3.18	ECP'S and requests for deviations and waivers	DI-E-2037
4.4, 4.6	First article inspection procedure	DI-T-4901
4.4, 4.6	First article inspection report	DI-T-4902

4.1.1, 4.6.1, 4.6.2.1, 4.6.2.2, 4.6.3, 4.6.5	Test plan, systems, components	DI-T-1903
4.1.2, 4.6.1, 4.6.2.1, 4.6.2.2, 4.6.3, 4.6.5	Test report, systems, components	DI-T-1906

6.3 First article. When first article inspection is required, the item will be tested and should be a first article sample. First article inspection shall require a minimum of four seats of each type, class and size being purchased, representative of standard production items. The contracting officer should include specific instructions in acquisition documents regarding arrangements for examinations, test and approval of the first article.

6.4 Definitions. For the purpose of this specification, the following definitions apply.

6.4.1 Anthropometric data. US Army Natick Labs Report 72-51-CE shall be referred to as a source document for anthropometric data on troops/passengers.

6.4.2 Occupant weights and equipment. Unless otherwise specified, the occupant and equipment weights in table IV are applicable for design and test considerations.

6.4.3 Effective weight of occupant. The effective weight of a seated occupant in the vertical direction is the sum of the following quantities: 80 percent of the occupant's body weight, 80 percent of the weight of the occupant's clothing less boots, and 100 percent of the weight of any equipment carried totally on the occupant's body above the knee level.

6.4.4 G. The term G is the ratio of a particular acceleration to the acceleration due to gravitational attraction at sea level; therefore, 10G represents an acceleration of 321.7 feet/second/second.

6.4.5 Occupant submarining. In a crash with high vertical and longitudinal forces (measured along the seat longitudinal axis) present, the restrainted body will tend to sink down into the seat first and them almost simultaneously be forced forward. If the seat is provided with an improperly designed restraint or seat cushion, the inertia load of the hips and thighs will pull the lower torso under the lap belt during the crash sequence. This phenomenon is referred to as occupant submarining.

6.4.6 Dynamic overshoot. Dynamic overshoot exists when the seat occupant receives an amplification of the accelerative force applied to the seat. A loose or highly elastic restraint system, or a cushion with a high rebound potential which permits "bottoming out" on the seat pan, can facilitate dynamic overshoot.

6.4.7 Load factor. Load factor is the ratio of the design load or applied static test load to the combined weight of the seat, effective weight of the occupant and any equipment attached to the seat.

6.4.8 Graphic approximation technique. Based upon acceleration time plots from measurements or computations, rise time, plateau duration, and G values along in the vertical (z) axis at a specific time may be obtained using the following graphic approximation technique, as shown in figure 17.

a. Establish the calibration baseline, correcting for any gravity bias acceleration,

b. Establish the maximum (peak) acceleration magnitude.

c. Construct a reference line parallel to the calibration baseline at a magnitude equal to 10 percent of the peak acceleration. The intersection of this line with the acceleration time plot defines points 1 and 2.

d. Construct a second reference line parallel to the calibration baseline at a magnitude equal to 90 percent of the peak acceleration. The intersection of this line with the acceleration time plot defines points 3 and 4.

e. Construct the onset line defined by the straight line through points 1 and 3.

f. Construct the offset line defined by the straight line through points 2 and 4.

g. Construct a line parallel to the calibration baseline, through the peak acceleration. The time interval defined by the intersections of this line with the constructed onset and offset lines (points 5 and 6) is the plateau (Δt).

h, Locate the intersection of the constructed onset line with the calibration baseline (point 7). The time interval defined by points 7 and 5 is the rise time (T_R).

i. For a given plot of accelerations in the x and y axes, the specific G values are graphically obtained from the constructed onset and offset lines for the specific time at which the summation vector "of acceleration is the greatest.

6.4.9 Load limiter; energy absorber. These are interchangeable names of devices used to limit the load on a structure to a preselected value. These devices absorb energy by providing a resistive force applied over a deformation distance without significant elastic rebound.

6.4.10 Limit load. In a structure, limit load refers to the load the structure will carry before yielding. Similarly, in an energy-absorbing device, it represents the load at which the device deforms in performing its function.

Preparing activity:
Navy - AS

(Project no. 1680-N495

TABLE I. Seat design and static test requirements.

Test ref. no.	Loading direction with respect to fuselage floor	Load required	Percentile occupant used in load determination	Load/deformation requirements 1/, 2/
1	Upward	8 G minimum	95	No requirement
2	Downward 3/, 4/, 10/	14.5 $^{+1.0\ G}_{-0\ G}$	50	See figure 13
3	Aftward	12 G minimum	95	No requirement
4	Forward 10/	See figure 11	95	See figure 11
5	Combined: 10/			
	Forward 5/, 6/	See figure 11	95	See figure 11
	Downward 7/	14.5 $^{+2.0\ G}_{-1.0\ G}$	50	Same as test 2 8/
	Lateral 6/	9 G minimum	95	No requirements
6	Lateral 9/, 10/	See figure 12	95	See figure 12

The aircraft floor or bulkhead should be deformed as detailed in figures 15 and 16 simultaneously with, or prior to the conduct of all static tests and kept deformed throughout load application.

Plastic deformation is permissible; however, structural integrity must be maintained.

If more than one load-limiter setting is provided, a representative sample of settings spanning the range of loads should be tested.

Subsequent to the stroking of the vertical energy-absorbing device, cockpit seats should carry a static load of 25 G, based on the effective weight of the 95th-percentile clothed and equipped occupant per table III plus seat without loss of attachment to the basic structure except when the seat pan has stroked to and is supported by the floor.

In the event that no load-limiting device is used in the forward direction, a 20 G load for cabin seats and a 25 G load for cockpit seats may be used for this combined loading.

For seats employing vertical guides which could distort under combined loading and cause binding, the maximum forward and lateral loads should be reached prior to initiation of stroking. This sequence demonstrates whether the seat will stroke downward after transverse loads are applied.

If more than one load-limiter setting is provided, the highest load should be tested.

TABLE I. Seat design and static test requirements. - Continued

8/ Failure to meet the 14.5 G +2.0/-1.0 G static vertical load limit should not be cause for seat rejection if the seat vertical energy-absorbing system meets dynamic load requirements.

9/ The lateral loads should be applied in the most critical direction. In the case of symmetrical seats, the loading direction is optional.

10/ For optional test substitution see 4.6.2.

TABLE II. Restraint harness webbing load - elongation design and test requirements.

Use	Nominal strap width (in.)	Nominal thickness (in.)	Max elongation at design load (percent) 1/	Design load (lb)	Ultimate load (lb) 2/
Lap belt	2.00 to 3.00	0.055	10	4,000	6,000
Shoulder straps	2.00	0.055	10 3/	4,000	6,000 4/

1/ Total length of harness component tested shall be the same as its length as installed on the seat when adjusted for a 95th-percentile clothed occupant.

2/ This load shall be applied in straight tension.

3/ This applies only to shoulder harness exclusive of the webbing wound on the spool of the inertia reel.

4/ This represents the total load on two shoulder straps. A single diagonal shoulder strap should carry 6,000 pounds.

TABLE III. Classification of defects for visual examination of the seat.

Critical	Minor
1. Dimensions not within specified tolerances	201. Seat marking - missing insufficient, incorrect, illegible or not permanent
2. Material imperfections	202. Seat color not as specified
3. Surfaces - misaligned or containing cracks, nicks or other flaws	203. Defective exterior and interior markings on packaging
4. Any component missing, malformed, fractured or otherwise damaged	204. Nonconforming packaging materials
5. Incorrect assembling or improper positioning of components	205. Inadequate packaging workmanship
6. Any component loose or otherwise not securely retained	
7. Any functioning part that works with difficulty	
8. Faulty workmanship or other irregularities	

TABLE IV. Occupant weights. 1/

Item	95th percentile wt-lb	50th percentile wt-lb	5th percentile wt-lb
Troop weight	201.9	156.3	126.3
Clothing (less boots)	3.0	3.0	3.0
Boots	4.0	4.0	4.0
Equipment	33.3	33.3	33.3
Total weight	242.2	196.6	166.6
Vertical effective weight clothed	163.9	127.4	103.4
Vertical effective weight equipped	197.2	160.7	136.7

1/ Refer to US Army Natick Research and Development Laboratories Technical Report TR 72-51.

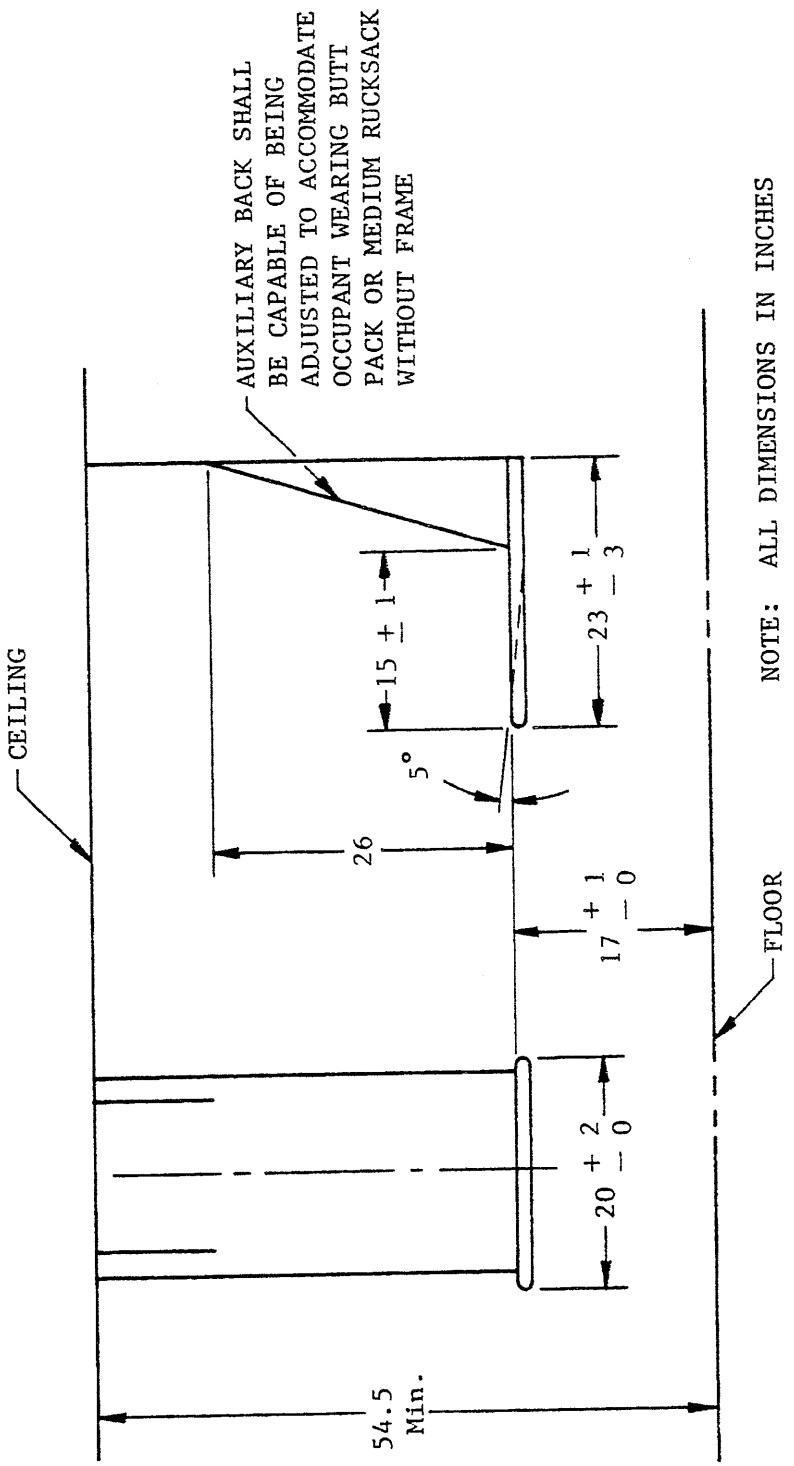

FIGURE 1. Seat dimensions.

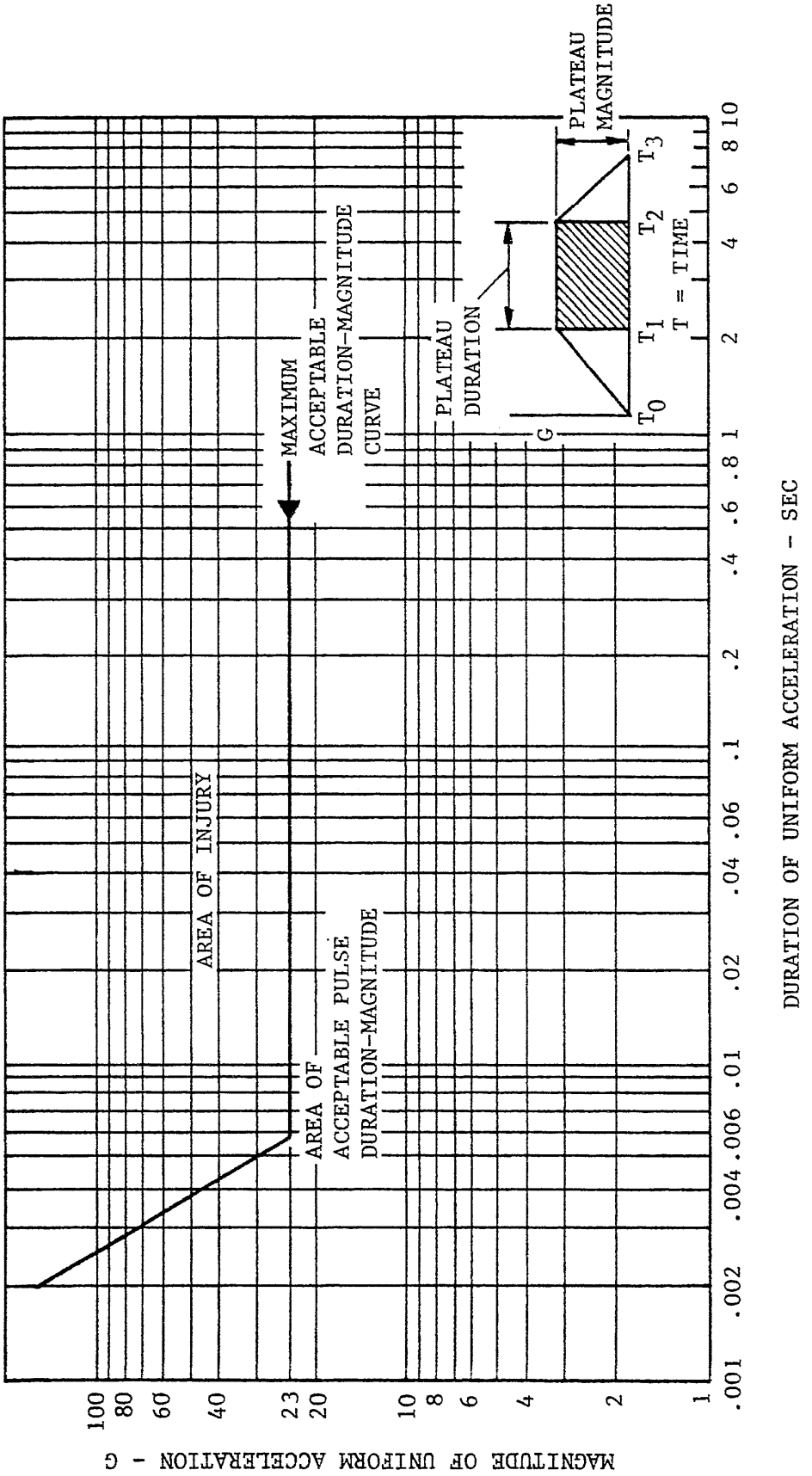

FIGURE 2. Maximum acceptable vertical pulse acceleration and duration values.

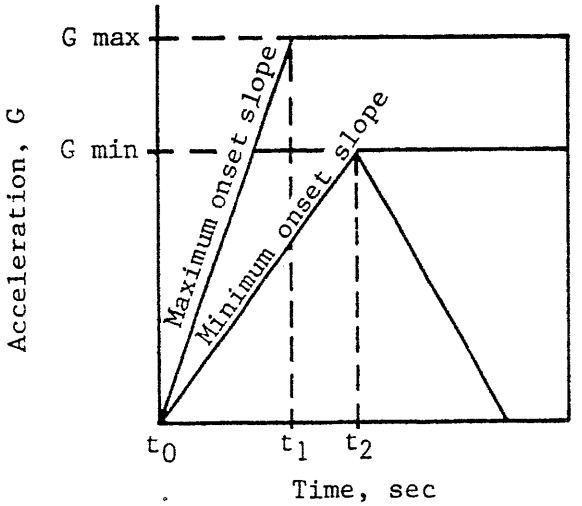

Test	Configuration 1/	Parameter	Cabin seats	
			Qualification	R&D
1	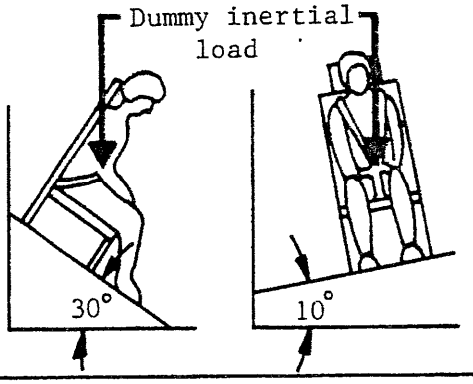	t_1 sec	0.059	0.034
		t_2 sec	0.087	0.087
		G min	32	32
		G max	37	37
		Δv min, ft/sec	50	50
2	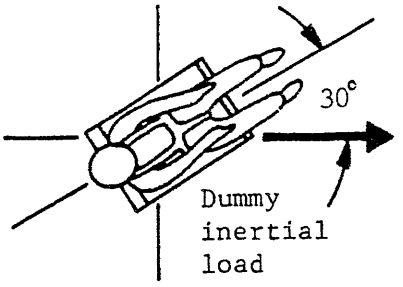	t_1 sec	0.081	0.046
		t_2 sec	0.127	0.127
		G min	22	22
		G max	27	27
		Δv min, ft/sec	50	50

1/ All tests should be performed with aircraft floor or bulkhead deformed as shown in figure 15 or 16, respectively. The combination of warping conditions should be that which represents the most critical case for seat performance.

FIGURE 3. Dynamic test requirements for qualification and for research/development testing.

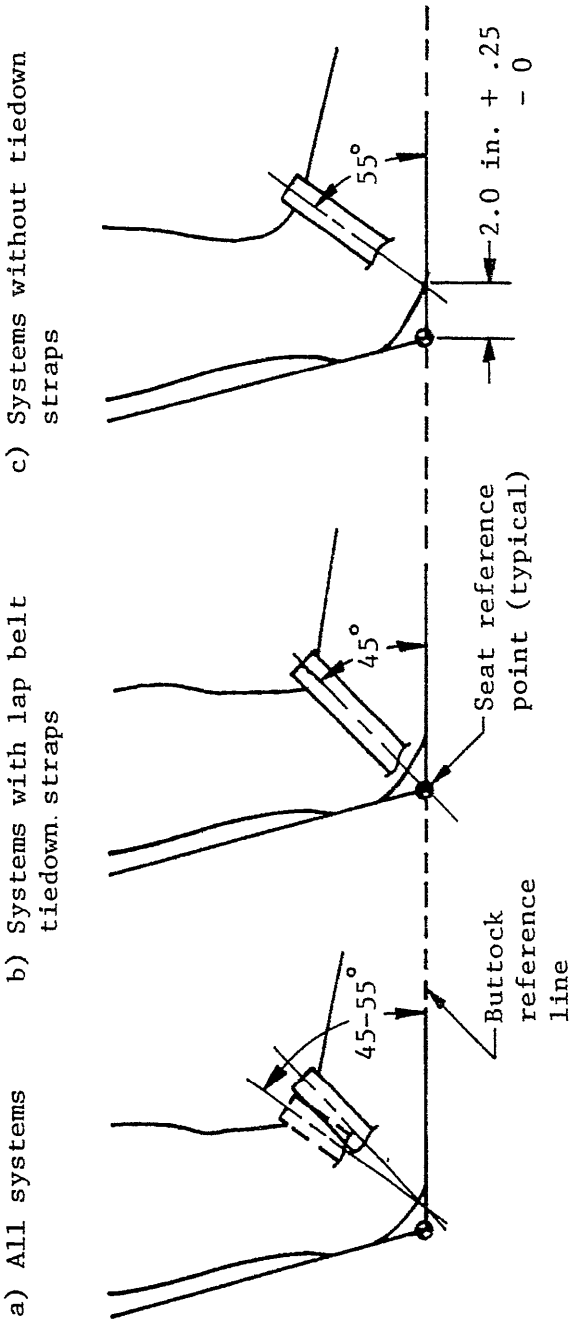

FIGURE 4. Lap belt anchorage geometry.

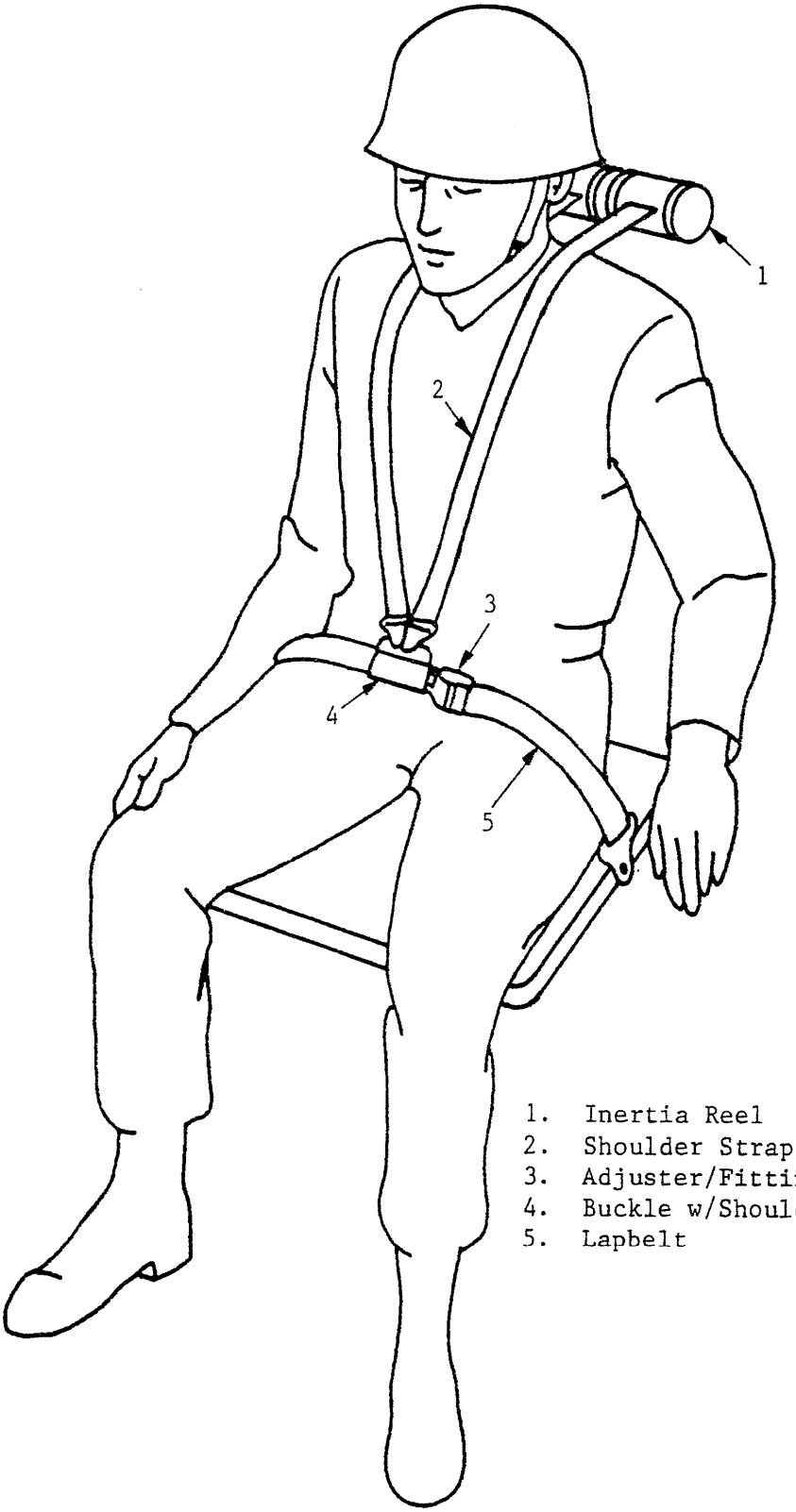

1. Inertia Reel
2. Shoulder Strap
3. Adjuster/Fitting
4. Buckle w/Shoulder Strap Connection
5. Lapbelt

FIGURE 5. Forward- and aft-facing seat restraint system configuration (class A or B).

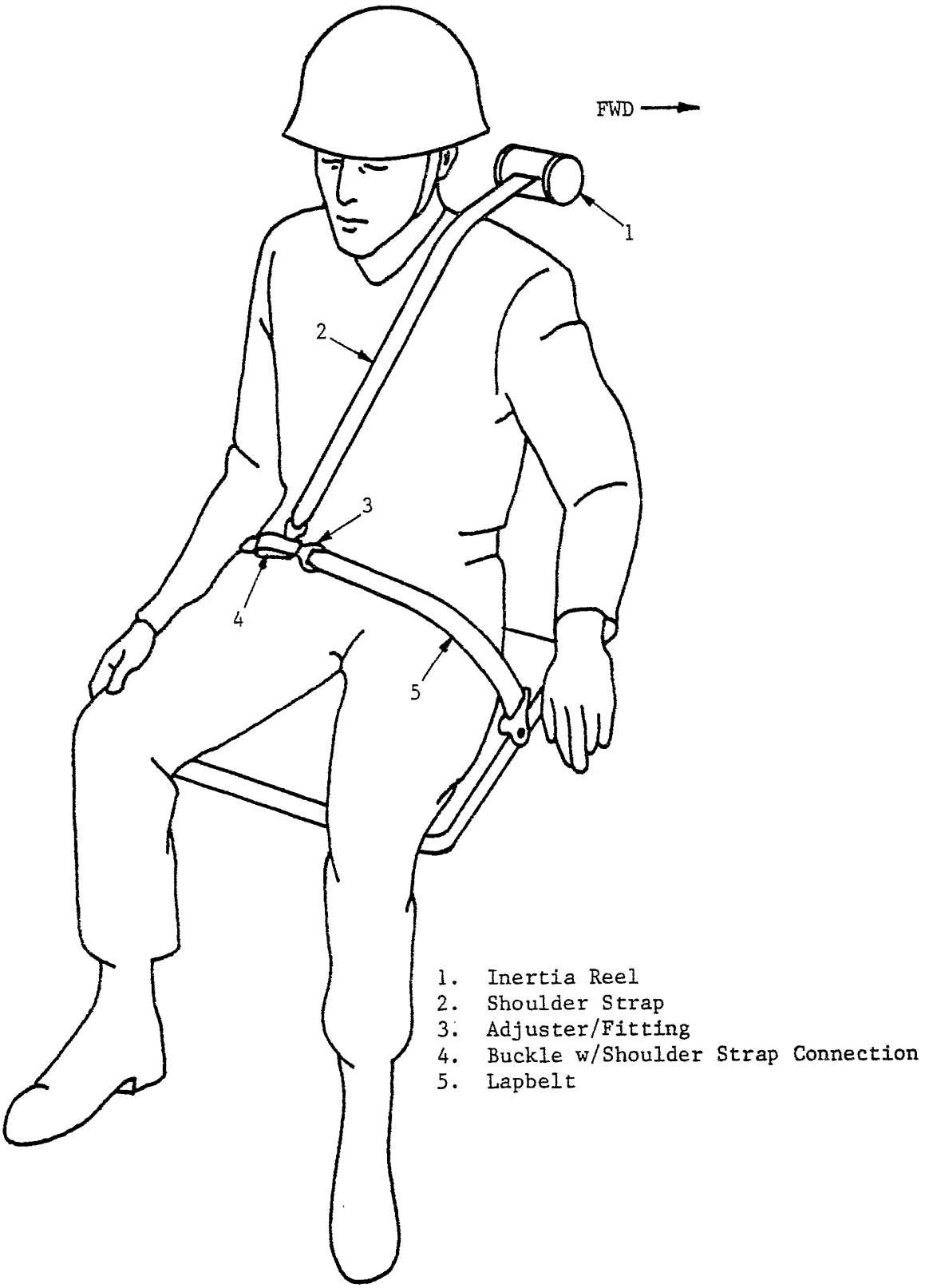

FIGURE 6. Side-facing seat restraint system configuration (class C).

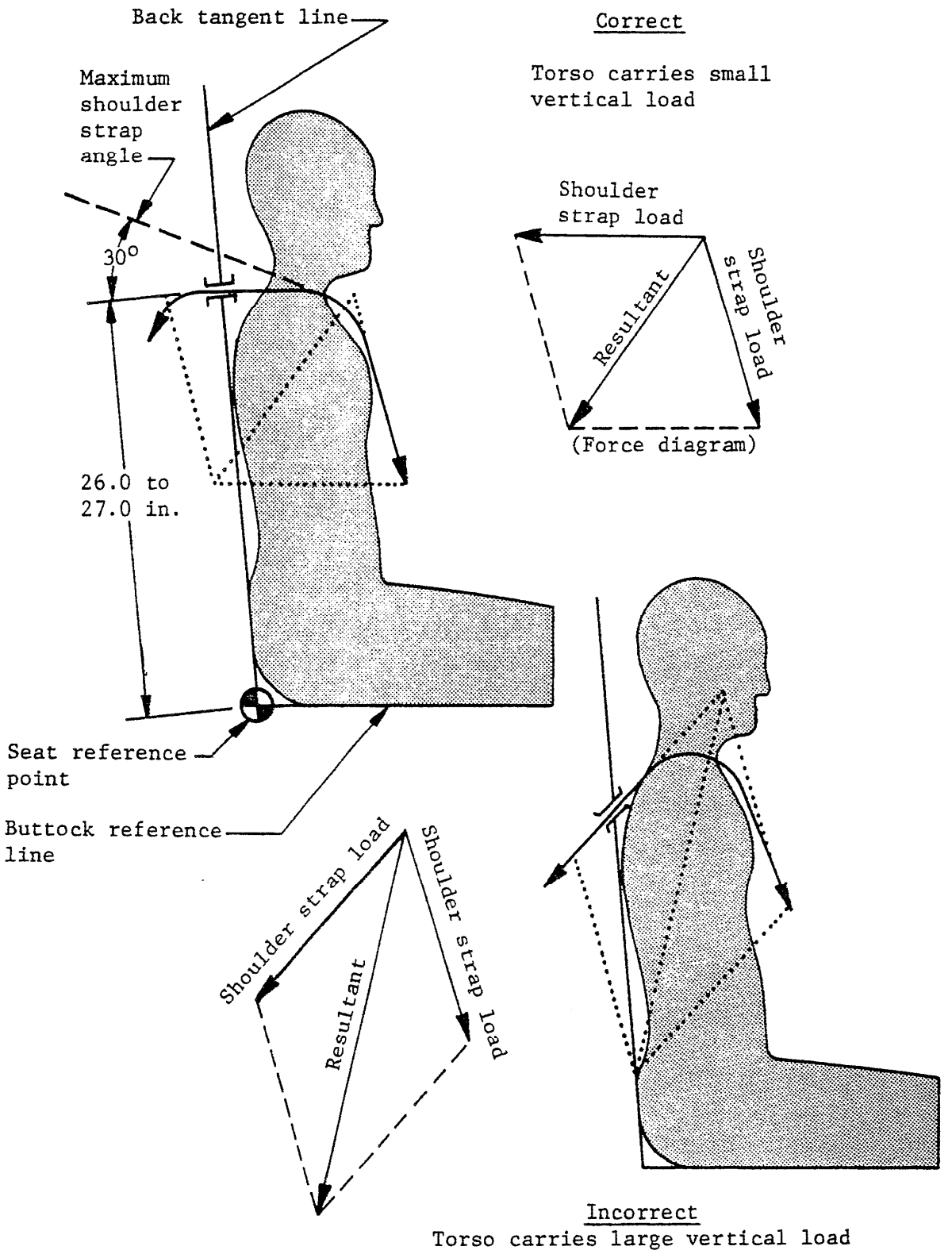

FIGURE 7. Shoulder harness anchorage geometry.

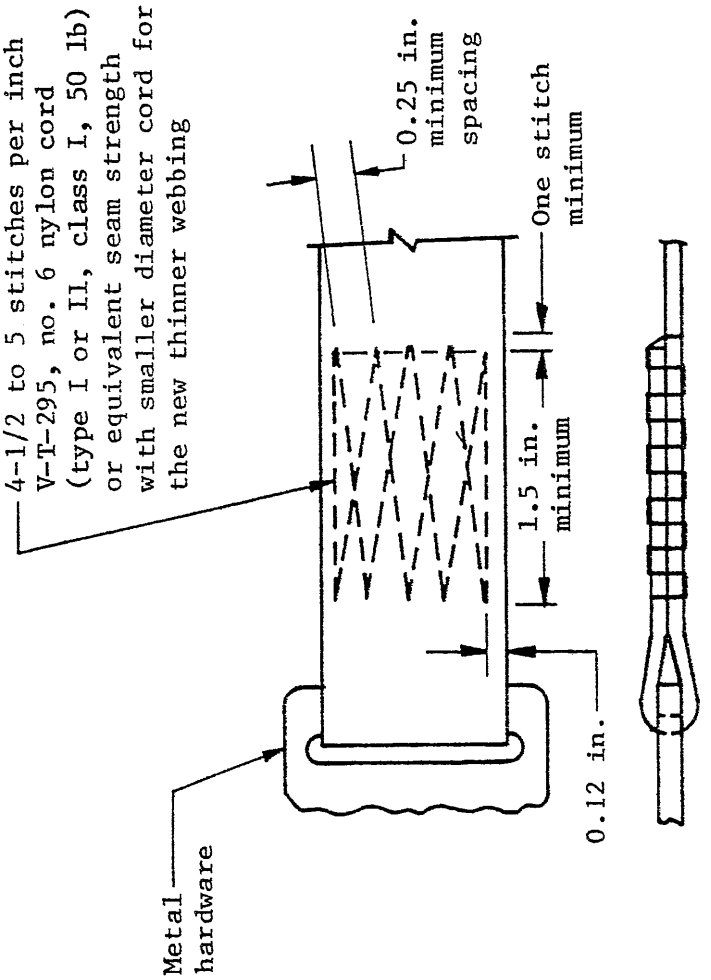

FIGURE 8. Stitch pattern and cord size.

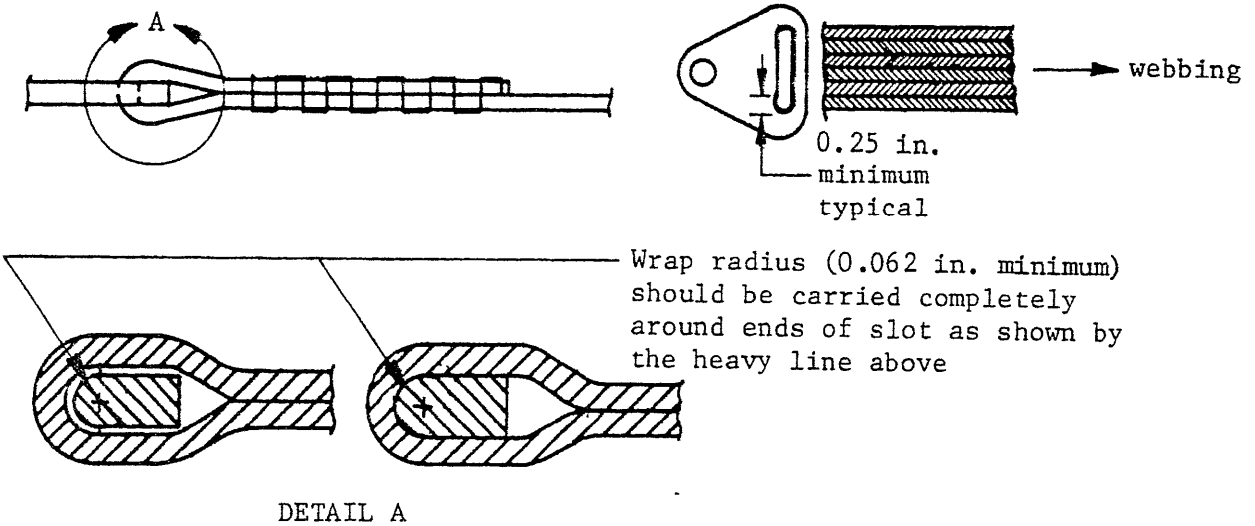

FIGURE 9. Wrap radius for webbing joints.

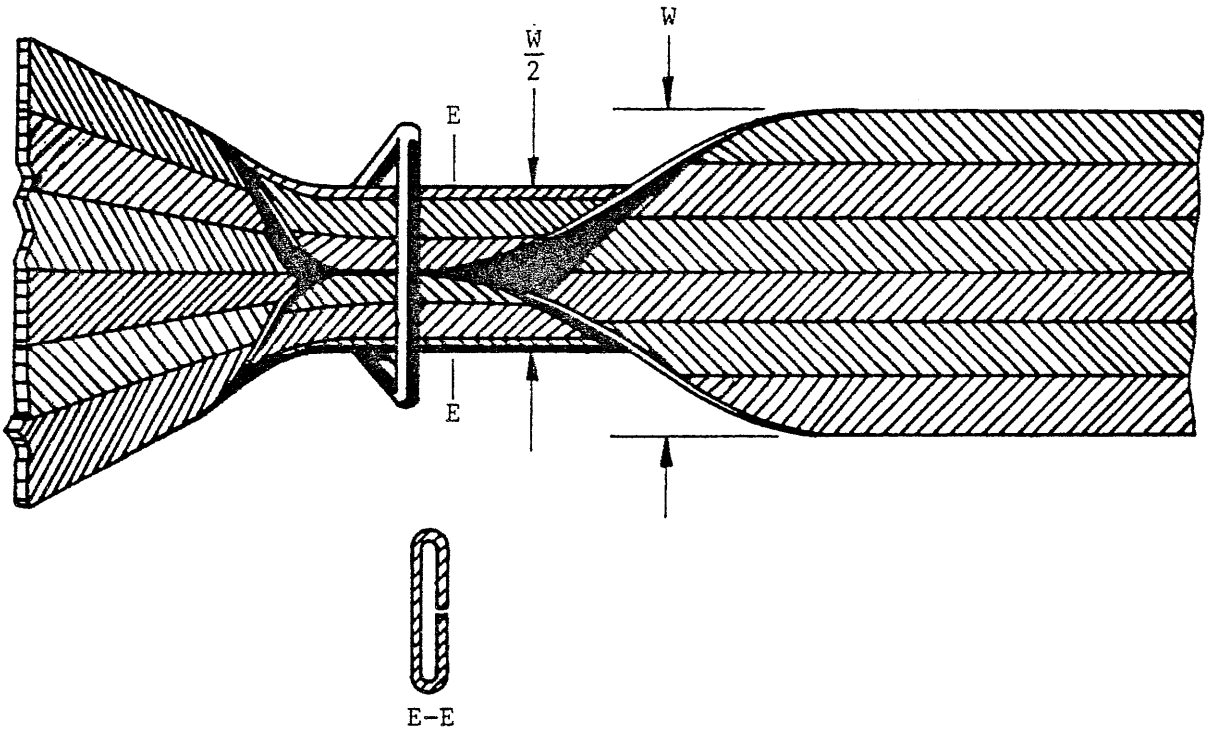

FIGURE 10. Webbing fold at metal hardware attachment.

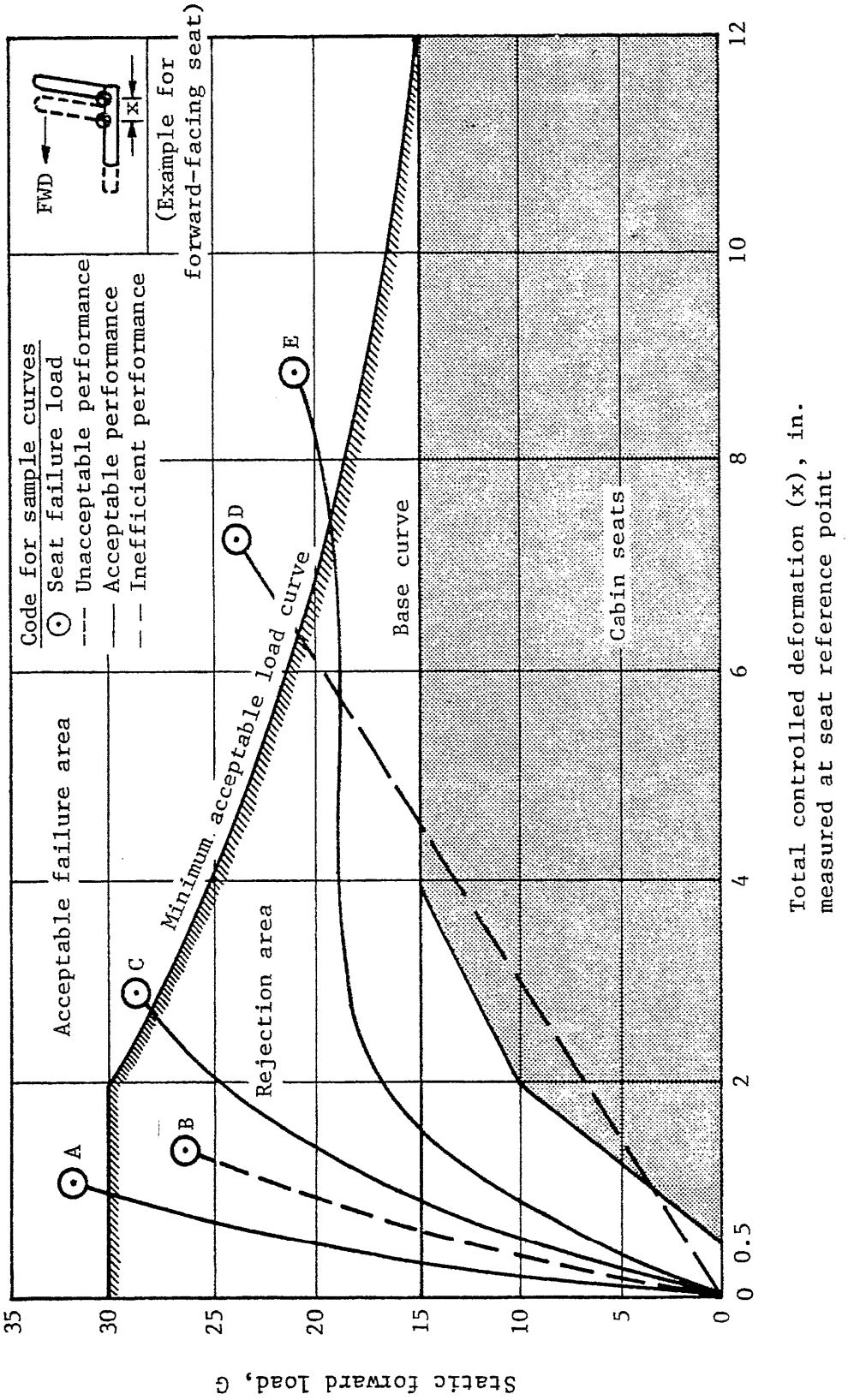

FIGURE 11. Seat forward load and deflection requirements for all types of aircraft (forward design pulse).

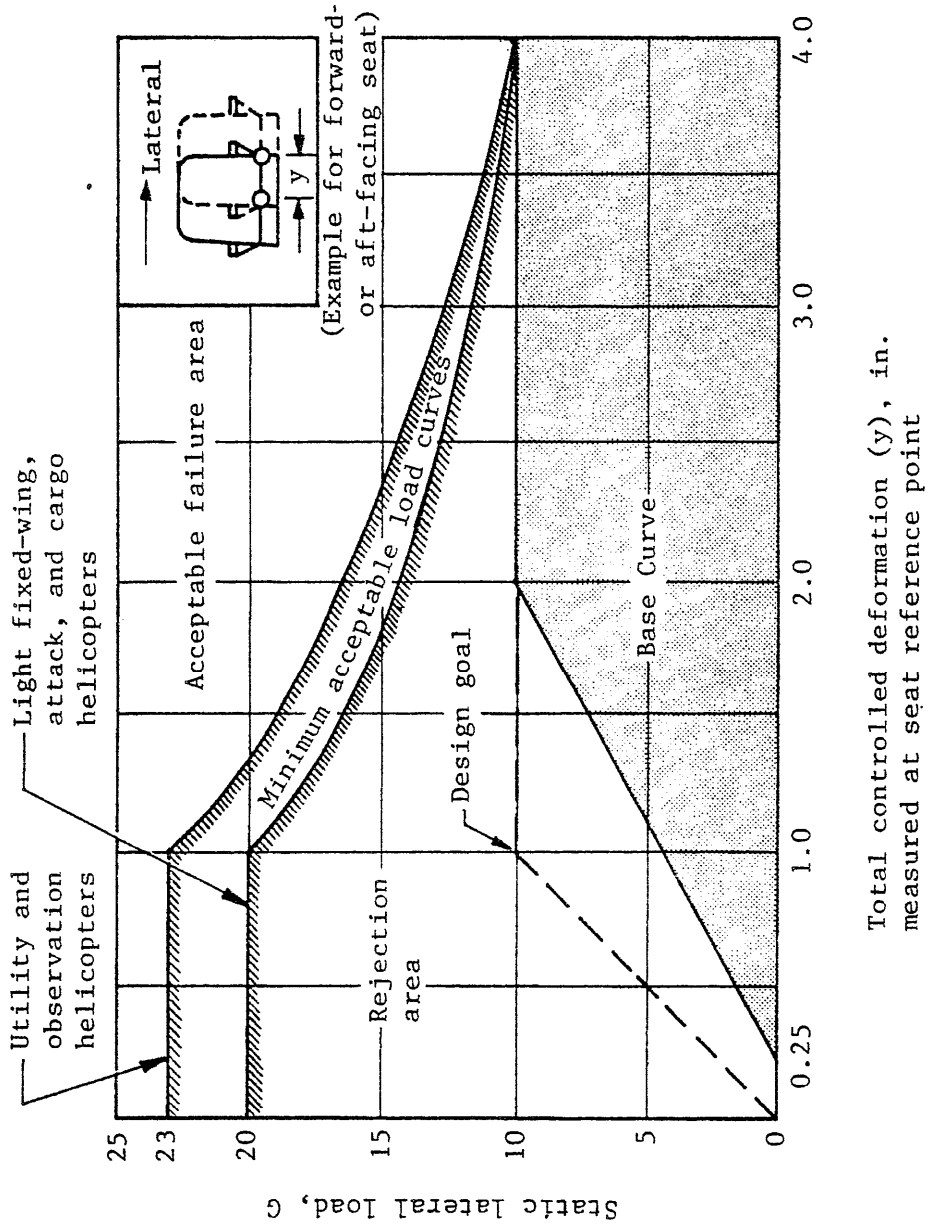

FIGURE 12. Lateral seat load and deformation requirements for all types of aircraft.

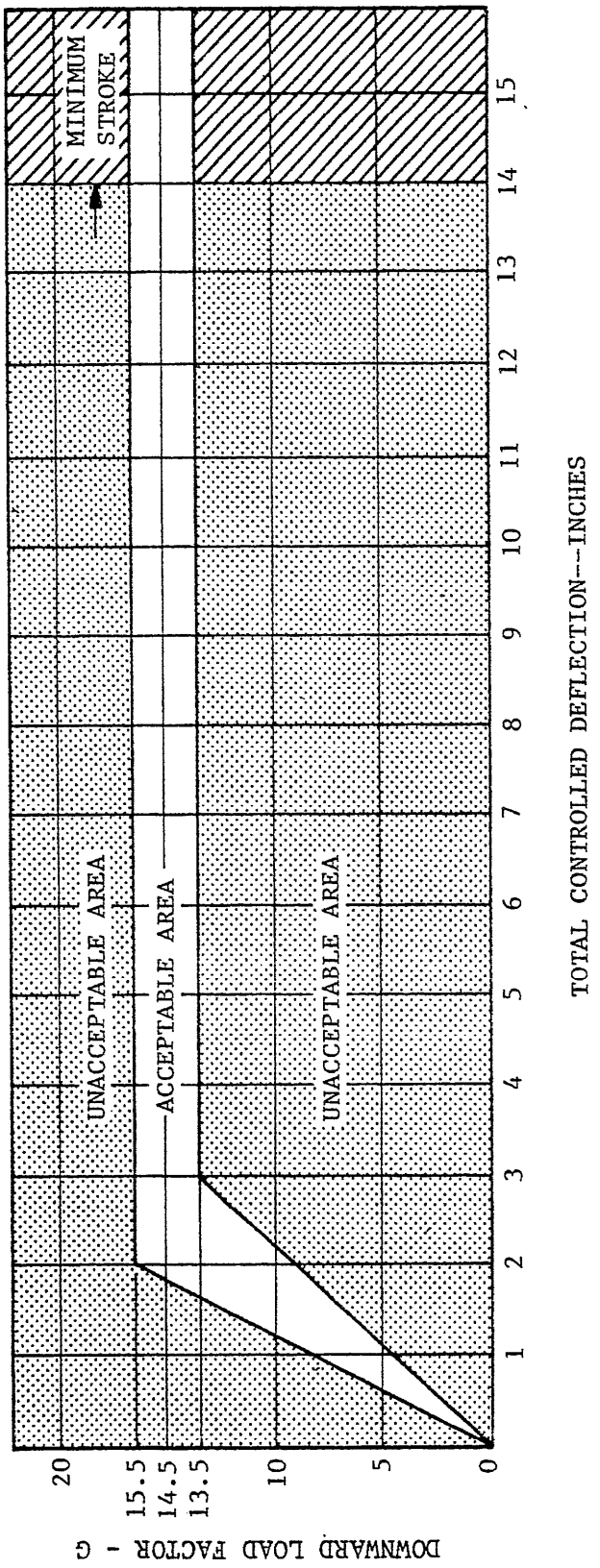

FIGURE 13. Seat downward load and deflection requirements.

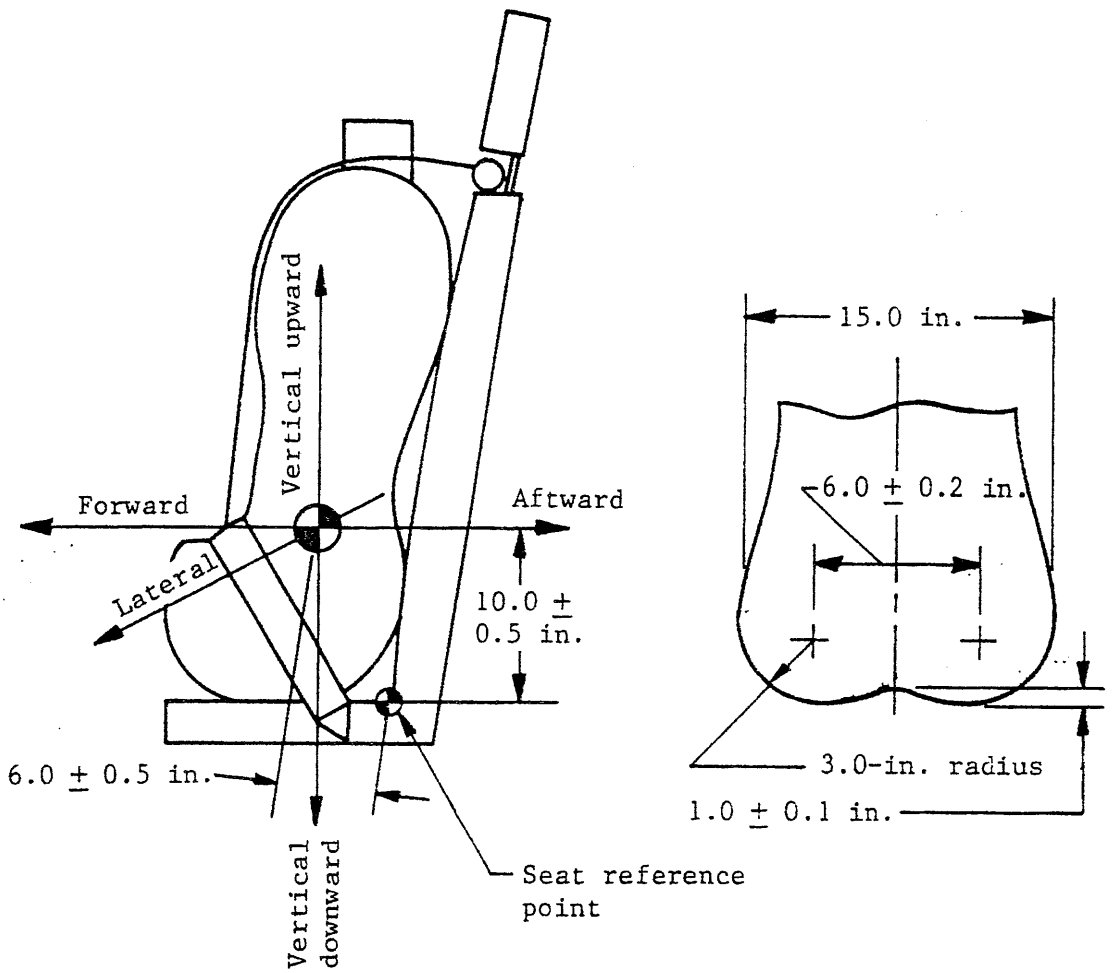

FIGURE 14. Static load application point and critical body block pelvis geometry.

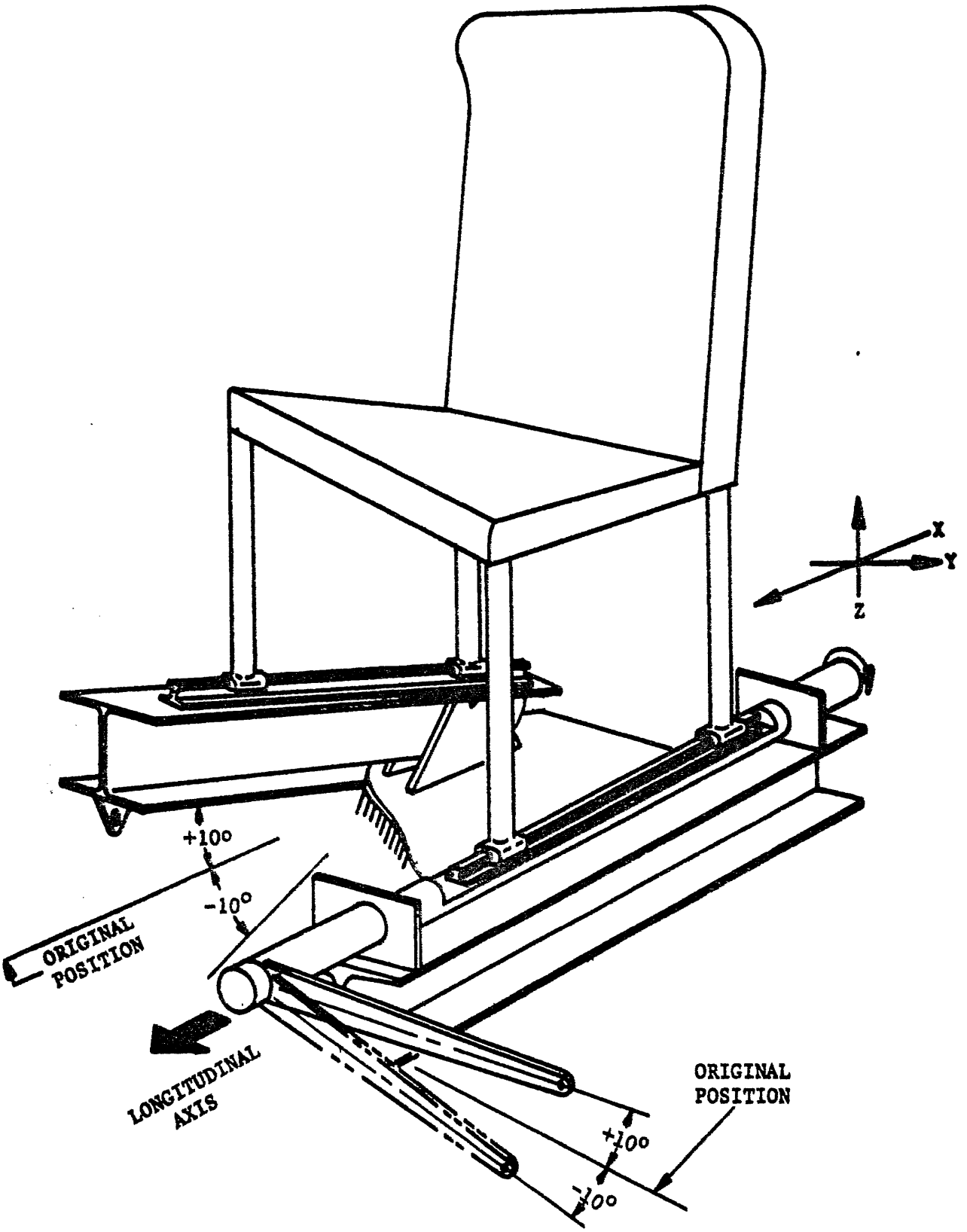

FIGURE 15. Diagram illustrating floor warpage requirement for static and dynamic testing of seat(s). (This diagram only illustrates floor warpage and is not intended to illustrate seat design).

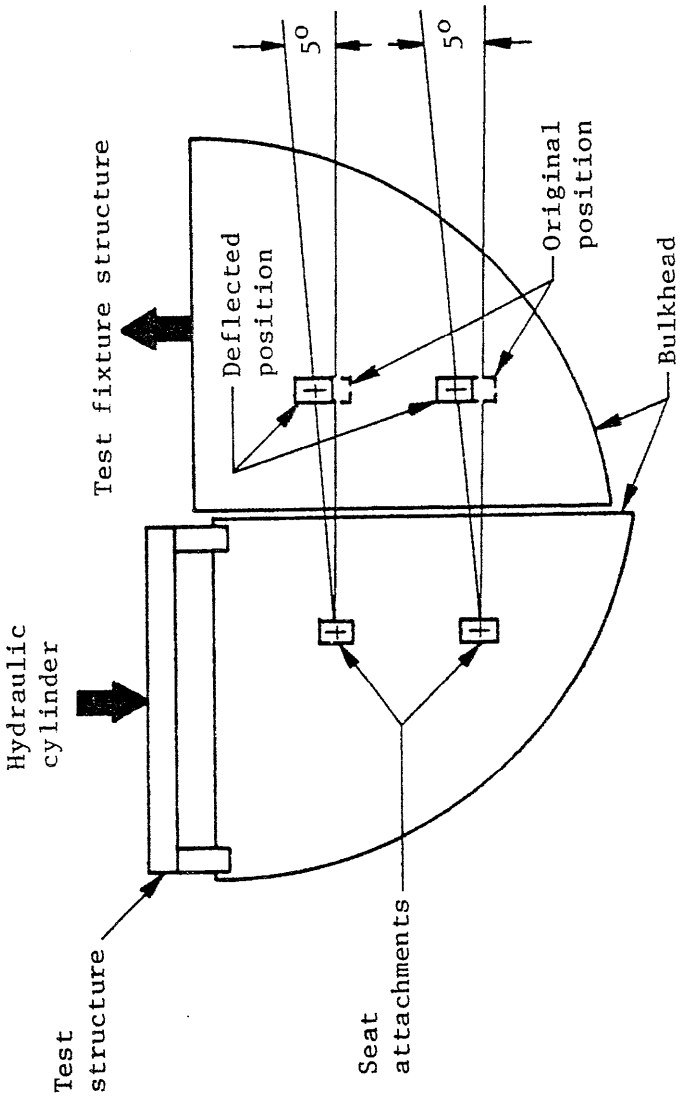

FIGURE 16. Suggested method of applying bulkhead warping for static testing of seats.

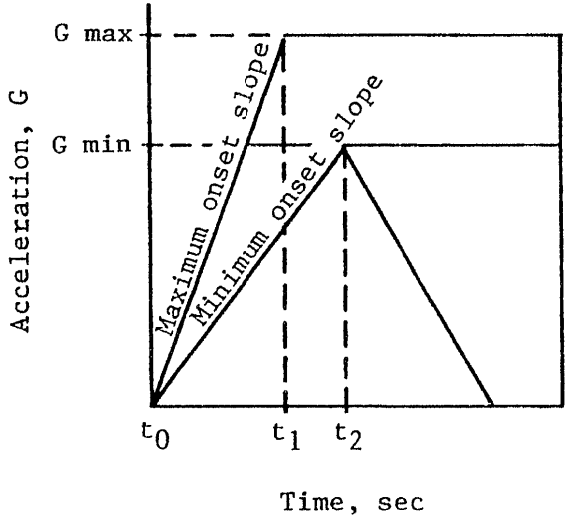

Test	Configuration 1/	Parameter	Cabin seats	
			Qualification	R&D
1	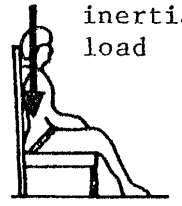 Dummy inertial load	t_1 sec	.050	.028
		t_2 sec	.074	.074
		G min	32	32
		G max	37	37
		Δv min, ft/sec	42	42
2a	Utility and observation helicopters 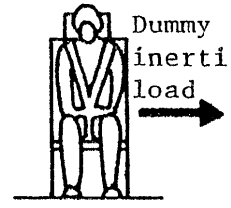 Dummy inertial load	t_1 sec	.062	.036
		t_2 sec	.104	.104
		G min	16	16
		G max	21	21
		Δv min, ft/sec	30	30
2b	Light fixed-wing, cargo and attack helicopters 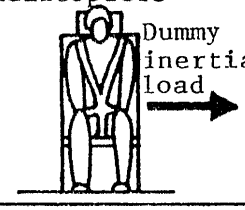 Dummy inertial load	t_1 sec	.057	.033
		t_2 sec	.100	.100
		G min	14	14
		G max	19	19
		Δv min, ft/sec	25	25
3	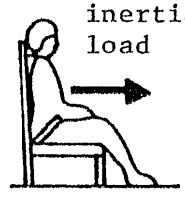 Dummy inertial load	t_1 sec	.081	.046
		t_2 sec	.127	.127
		G min	22	22
		G max	27	27
		Δv min, ft/sec	50	50

1/ All tests should be performed with aircraft floor or bulkhead deformed as shown in figure 15 or 16, respectively. The combination of warping conditions should be that which represents the most critical case for seat performance.

FIGURE 18. Requirements of additional dynamic tests if substituted for static tests.

STANDARDIZATION DOCUMENT IMPROVEMENT PROPOSAL

INSTRUCTIONS: This form is provided to solicit beneficial comments which may improve this document and enhance its use. DoD contractors, government activities, manufacturers, vendors, or other prospective users of the document are invited to submit comments to the government. Fold on lines on reverse side, staple in corner, and send to preparing activity. Attach any pertinent data which may be of use in improving this document. If there are additional papers, attach to form and place both in an envelope addressed to preparing activity. A response will be provided to the submitter, when name and address is provided, within 30 days indicating that the 1426 was received and when any appropriate action on it will be completed.

NOTE: This form shall not be used to submit requests for waivers, deviations or clarification of specification requirements on current contracts. Comments submitted on this form do not constitute or imply authorization to waive any portion of the referenced document(s) or to amend contractual requirements.

DOCUMENT IDENTIFIER *(Number)* AND TITLE

MIL-S-85510(AS) SEATS, HELICOPTER CABIN, CRASHWORTHY, GENERAL SPECIFICATION FOR

NAME OF ORGANIZATION AND ADDRESS OF SUBMITTER

☐ VENDOR ☐ USER ☐ MANUFACTURER

1. ☐ HAS ANY PART OF THE DOCUMENT CREATED PROBLEMS OR REQUIRED INTERPRETATION IN PROCUREMENT USE? ☐ IS ANY PART OF IT TOO RIGID, RESTRICTIVE, LOOSE OR AMBIGUOUS? PLEASE EXPLAIN BELOW.

A. GIVE PARAGRAPH NUMBER AND WORDING

B. RECOMMENDED WORDING CHANGE

C. REASON FOR RECOMMENDED CHANGE(S)

2. REMARKS

SUBMITTED BY *(Printed or typed name and address — Optional)*

TELEPHONE NO.

DATE

DD FORM 1426 1 OCT 76

EDITION OF 1 JAN 72 WILL BE USED UNTIL EXHAUSTED.

FOLD

DEPARTMENT OF THE NAVY

OFFICIAL BUSINESS
PENALTY FOR PRIVATE USE $300

NO POSTAGE NECESSARY IF MAILED IN THE UNITED STATES

BUSINESS REPLY MAIL

FIRST CLASS PERMIT NO. 12503 WASHINGTON D. C.

POSTAGE WILL BE PAID BY THE DEPARTMENT OF THE NAVY

Engineering Specifications and Standards Department (Code 93)
Naval Air Engineering Center
Lakehurst, NJ 08733

FOLD