Downloaded from http://www.everyspec.com

INCH-POUND

MIL-S-82793(OS)
29 December 1989
SUPERSEDING
WS 20620
25 October 1983
(See 6.5)

MILITARY SPECIFICATION

SEALANT, UF 3195

This specification is approved for use by the Naval Sea Systems Command, Department of the Navy and is available for use by all Departments and Agencies of the Department of Defense.

1. SCOPE

1.1 Scope. This specification covers the requirements for an asbestos float-filled, liquid epoxy resin sealant containing a polyamide curing agent and a thixotropic agent, referred to herein as the sealant.

2. APPLICABLE DOCUMENTS

2.1 Government documents.

2.1.1 Specifications, standards and handbooks. The following specifications, standards and handbooks form a part of this document to the extent specified herein. Unless otherwise specified, the issues of these documents are those listed in the issue of the Department of Defense Index of Specifications and Standards (DODISS) and supplement thereto, cited in the solicitation (see 6.2).

SPECIFICATIONS

MILITARY

MIL-T-81533 1,1,1-Trichloroethane (Methyl Chloroform) Inhibited, Vapor Degreasing

Beneficial comments (recommendations, additions, deletions) and any pertinent data which may be of use in improving this document should be addressed to: Commanding Officer, Naval Ordnance Station, Standardization Branch (3730), Indian Head, MD 20640-5000, by using the self-addressed Standardization Document Improvement Proposal (DD Form 1426) appearing at the end of this document or by letter.

AMSC N/A

FSC 8030

DISTRIBUTION STATEMENT A. Approved for public release; distribution is unlimited.

Downloaded from http://www.everyspec.com

MIL-C-82794 Curing Agent, Polyamide Liquid Resin

MIL-F-82795 Floats, Pulp, Asbestos

MIL-R-82804 Resin, Epoxy, Liquid

MIL-S-82858 Silicone Dioxide, Microfine

STANDARDS

FEDERAL

FED-STD-313 Material Safety Data, Transportation Data and Disposal Data for Hazardous Materials Furnished to Government Activities

MILITARY

MIL-STD-129 Marking for Shipment and Storage

(Unless otherwise indicated, copies of federal and military specifications, standards and handbooks are available from Military Specifications and Standards, Bldg. 4D, 700 Robbins Avenue, Philadelphia, PA 19111-5094.)

2.1.2 **Other Government documents, drawings, and publications.** The following other Government documents, drawings, and publications form a part of this document to the extent specified herein. Unless otherwise specified, the issues are those cited in the solicitation.

CODE OF FEDERAL REGULATIONS (CFR)

49 CFR 100-199 Transportation

(Application for copies of CFRs should be addressed to the Superintendent of Documents, U.S. Government Printing Office, Washington, D.C. 20402-0001.)

2.2 **Non-Government publications.** The following documents form a part of this document to the extent specified herein. Unless otherwise specified, the issues of the documents which are DOD adopted are those listed in the issue of the DODISS cited in the solicitation. Unless otherwise specified, the issues of documents not listed in the DODISS are the issues of the documents cited in the solicitation (see 6.2).

AMERICAN TRUCKING ASSOCIATION, INC.

National Motor Freight Classification

(Application for copies should be addressed to the American Trucking Association, Inc., Attn: Traffic Dept., 2200 Mill Road, Alexandria, VA 22314-4677.)

Downloaded from http://www.everyspec.com

NATIONAL RAILROAD FREIGHT COMMITTEE

Uniform Freight Classification (UFC) 6000

(Application for copies should be addressed to the National Railroad Freight Committee, 222 South Riverside Plaza, Suite 1106, Chicago, IL 60606-5945.)

(Non-Government standards and other publications are normally available from the organizations that prepare or distribute the documents. These documents also may be available in or through libraries or other informational services.)

2.3 **Order of precedence.** In the event of a conflict between the text of this document and the references cited herein, the text of this document takes precedence. Nothing in this document, however, supersedes applicable laws and regulations unless a specific exemption has been obtained.

3. **REQUIREMENTS**

3.1 **Composition.** The composition of the sealant shall be as specified in table I.

TABLE I. Composition.

Material	Parts by Weight Minimum	Maximum	Applicable Specification
Liquid epoxy resin	27.55	28.05	MIL-E-82804
Polyamide liquid resin curing agent	51.35	51.85	MIL-C-82794
Asbestos pulp floats	20.52	20.69	MIL-F-82795
Microfine silicon dioxide 1/	0.10	3.50	MIL-S-82858

1/ For raw material lot evaluation, use 1 percent (see 4.3).

3.2 **Manufacture.**

3.2.1 **Materials.** Materials used in the manufacture of the sealant shall pass the raw material lot evaluation test (see 4.3).

3.2.2 **Weighing.** The weighing of raw materials used in the manufacture of the sealant shall be in accordance with table II.

Downloaded from http://www.everyspec.com

TABLE II. Raw material weighing data.

Raw material net weights	Maximum deviation allowable
<1 pound 1/	0.1 gram
1 - 25 pounds	0.01 lb
>25 - 175 pounds	0.1 lb
>175 - 500 pounds	0.25 lb
>500 pounds	0.5 lb

1/ If less than a pound, weigh in grams.

3.2.3 **Mixing.** The material shall be mixed until the sealant is homogeneous.

3.3 **Tensile adhesion.** The sealant shall have a tensile adhesion strength, steel-to-steel, of 1000 psi or greater.

3.4 **Safety.**

3.4.1 **Toxic products and formulations.** The material shall have no adverse effect on the health of personnel when used for its intended purpose. Questions pertinent to this effect shall be referred by the contracting activity to the appropriate departmental medical service who will act as an advisor to the contracting agency (see 4.1.2).

3.4.2 **Material Safety Data Sheets (MSDS).** The contractor shall prepare and submit an MSDS in accordance with FED-STD-313 as specified in the contract (see 6.2).

3.5 **Workmanship.** Workmanship shall be such that the sealant is uniform in appearance and free from visible contamination.

4. QUALITY ASSURANCE PROVISIONS

4.1 **Responsibility for inspection.** Unless otherwise specified in the contract or purchase order, the contractor is responsible for the performance of all inspection requirements (examinations and tests) specified herein. Except as otherwise specified in the contract or purchase order, the contractor may use his own or any other facilities suitable for the performance of the inspection requirements specified herein, unless disapproved by the Government. The Government reserves the right to perform any of the inspections set forth in the specification where such inspections are deemed necessary to ensure supplies and services conform to prescribed requirements.

Downloaded from http://www.everyspec.com

4.1.1 **Responsibility for compliance.** All items shall meet all requirements of sections 3 and 5. The inspection set forth in this specification shall become a part of the contractor's overall inspection system or quality program. The absence of any inspection requirements in the specification shall not relieve the contractor of the responsibility of ensuring that all products or supplies submitted to the Government for acceptance comply with all requirements of the contract. Sampling inspection, as part of manufacturing operations, is an acceptable practice to ascertain conformance to requirements, however, this does not authorize submission of known defective material, either indicated or actual, nor does it commit the Government to accept defective material.

4.1.2 **Toxicological product formulations.** The contractor shall have the toxicological product formulations and associated information available for review by the contracting activity to evaluate the safety of the material for the proposed use.

4.2 **Classification of inspections.** Inspection and testing of the sealant shall be classified as follows:

a. Raw material lot evaluation (see 4.3).

b. Quality conformance inspection (see 4.4).

4.3 **Raw material lot evaluation.** Each constituent shall be set aside and assigned a lot number. Using the proper proportion of each constituent (see table I), an evaluation test batch shall be manufactured in accordance with 3.1 and 3.2. The evaluation test batch shall then be tested in accordance with 4.5.1. If the evaluation test batch successfully passes this test, the lots of raw materials shall be considered satisfactory and shall be so identified. Thereafter, until exhaustion of one of the lots, only those evaluated lots of raw materials shall be used for the manufacture of the material. Upon replacement of an exhausted evaluated lot of raw material, the entire evaluation process shall be repeated.

4.4 **Quality conformance inspection.** Quality conformance inspection for each batch of material shall consist of the following:

a. Verification that each raw material used meets the requirements of its referenced specification (see table I) and has passed raw material lot evaluation (see 4.3).

b. Verification that the weighing of raw materials is in accordance with tables I and II.

c. Verification that the mixing of material is in accordance with 3.2.3.

4.5 **Test methods.** The following test methods shall be used. Unless otherwise specified in the applicable test method, all weights, volumes,

Downloaded from http://www.everyspec.com

temperatures, and times shall be measured to the nearest specified unit or decimal.

NOTE: Reagent grade chemicals shall be used for chemical reactions in the conduct of all tests defined herein. Solvents and indicators may be commercial nonreagent grade materials.

4.5.1 Tensile adhesion test.

4.5.1.1 Apparatus.

a. Tensile tester, Instron, equipped with a load cell of the appropriate size.

b. Adhesion discs meeting the requirements of figure 1.

4.5.1.2 **Evaluation batch size.** Test batch size shall be 5.0 ± 0.1 pounds.

4.5.1.3 **Sampling.** Six samples shall be taken at random from different locations in the test batch container. These samples shall be used to prepare six tensile adhesion test specimens.

4.5.1.4 **Preparation of adhesion discs.** Adhesion discs shall be prepared as follows:

a. Place steel adhesion discs in vapor degreaser and spray with methyl chloroform conforming to MIL-T-81533. Leave discs in the degreaser for 5 to 10 minutes.

b. Remove the discs from the degreaser and check for stains. If stains appear, degrease for an additional 15 minutes.

c. Grit blast bonding surface of each disc with 100 to 200 mesh zirconium silicate or equivalent.

d. Solvent wipe discs using a lint-free cloth and methyl chloroform. Allow to dry 10 minutes minimum before use. If discs are not to be bonded within 2 hours, place in a plastic bag and seal, to prevent contamination, until ready for use. Do not touch bond surface with fingers during handling procedure.

e. If the elapsed time from solvent wiping until use is longer than 48 hours, or if bond surface has been touched with fingers, repeat the solvent wiping and drying operation prior to specimen preparation.

Downloaded from http://www.everyspec.com

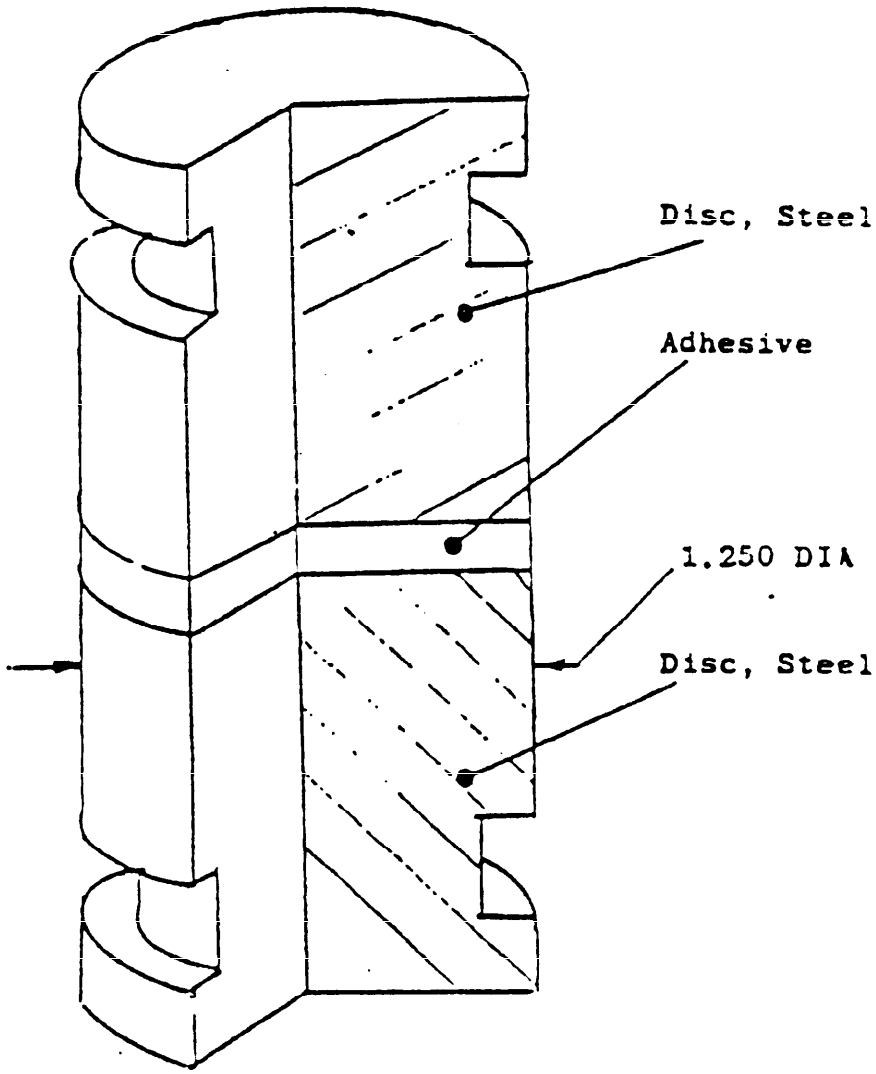

FIGURE 1. Tensile steel-to-steel specimen test assembly.

Downloaded from http://www.everyspec.com

4.5.1.5 **Preparation of test specimens.** Each test specimen shall be prepared as follows:

a. Apply sufficient adhesive mixed in accordance with 3.2.3 to completely cover the adhesion disc bonding surface. Ensure that the entire bonding surface is wetted.

b. Burst any air bubbles that may have formed by puncturing them with a sharp instrument.

c. Wet the bonding surface of a second adhesion disc with adhesive.

d. Place the bonding surfaces of the two adhesion discs in contact with a rotary motion and press down until all excess material has been forced out from between the two discs.

e. Remove any excess material which could affect test results.

f. Wrap the perimeter of the joint area of the specimens with shrink tape and wrap the assembled tensile adhesion specimens from end-to-end with shrink tape in a manner to ensure that the adhesion discs are properly seated and aligned during cure. One end of the shrink tape is attached to the disc surface using Scotch type cellophane tape (or equivalent). The other end is attached to itself usingthe same tape. After several wraps of the shrink tape, apply hot air from a heat gun to shrink the tape. (See figure 1 for a typical adhesion test specimen assembly.)

g. Identify test specimen as required for test traceability.

h. Cure specimen for a minimum of 5 hours at 170 $\pm$ 5°F.

i. Remove tape and allow specimen to cool.

4.5.1.6 **Testing of test specimens.** A total of five specimens shall be pulled to failure in accordance with the following:

a. Place each test specimen in an Instron Tensile Tester equipped with an appropriate load cell (or equivalent).

b. Apply a cross-head speed of 0.05 inch per minute (indicated) in tension at ambient temperature until failure of the specimen.

c. Pull a total of five specimens to failure. Determine the maximum force applied to each specimen and record.

NOTE: Since the bonded area is 1.23 square inches, multiply by 0.81 to record as pounds per square inch.

Downloaded from http://www.everyspec.com

d. Any values indicating rejection shall be reexamined. If a test specimen shows more than 10 percent voids, as visually determined, that value may be disregarded.

e. Record the reason for rejecting any test specimen.

f. Accept lots of raw material if a minimum of five test specimens comply with the tensile adhesion requirements of 3.3.

g. Record the adhesive strength of each specimen and the average to the nearest psi. Record the percent adhesive or cohesive failure.

4.6 **Inspection of packaging.** The sealant containers and container markings shall be visually examined to verify compliance with section 5.

5. **PACKAGING**

5.1 **Packaging.** Unless otherwise specified in the contract or order (see 6.2), packaging shall be level C as specified herein.

5.1.1 **Level C.** The sealant shall be packaged to afford adequate protection against loss, contamination, deterioration, and damage during shipment from the supply source to the first receiving activity. Containers in the same shipment shall be of the same size. The packaging shall conform to UFC 6000, National Motor Freight Classification, 49 CFR 171-178, or to other carrier rules and regulations as applicable to the mode of transportation.

5.2 **Marking.**

5.2.1 **Standard marking.** In addition to any special marking required by the contract or order (see 6.2), interior and exterior containers shall be marked in accordance with MIL-STD-129.

5.2.2 **Special marking.** In addition to the marking requirements of 5.2.1, each container marking shall include the following:

a. Title, number, and date of this specification.

b. Manufacturer's name and address.

c. Net weight of contents.

d. Storage conditions.

e. CAUTION: This sealant contains asbestos fibers. Avoid creating dust. Breathing asbestos dust may cause serious bodily harm.

Downloaded from http://www.everyspec.com

6. NOTES

(This section contains information of a general or explanatory nature that may be helpful, but is not mandatory.)

6.1 Intended use. The sealant is intended for use in the manufacture of the Standard Missile Mk 104 Dual Thrust Rocket Motor.

6.2 Acquisition requirements. Acquisition documents must specify the following:

a. Title, number and date of this specification.

b. Issue of DODISS to be cited in the solicitation, and if required, the specific issue of individual documents referenced (see 2.1.1 and 2.1.2).

c. Material Safety Data Sheet required (see 3.4.2 and 6.3).

d. Special marking, if other than as specified in 5.2.2.

6.3 Material Safety Data Sheets. MSDS requirements are applicable to this specification and should be specified in the contract as required by the Federal Acquisition Regulation (FAR) Part 23, subpart 23.3. Contracting officers will identify those activities requiring copies of completed Material Safety Data Sheets prepared in accordance with FED-STD-313. The pertinent Government mailing addresses for submission of data are listed in FED-STD-313.

6.4 Subject term (key word) listing.

Rocket Motor, Dual Thrust, Mk 104
Standard Missile

6.5 Supersedure information. MIL-S-82793 incorporates the following engineering change proposal (ECP) and specification change notice (SCN):

ECP	SCN
MTA023 (11/24/86)	SCN 1 (11/24/86)

Preparing Activity:
NAVY-OS
(Project 8030-N110)

Downloaded from http://www.everyspec.com

STANDARDIZATION DOCUMENT IMPROVEMENT PROPOSAL

INSTRUCTIONS

1. The preparing activity must complete blocks 1, 2, 3, and 8. In block 1, both the document number and revision letter should be given.
2. The submitter of this form must complete blocks 4, 5, 6, and 7.
3. The preparing activity must provide a reply within 30 days from receipt of the form.

NOTE: This form may not be used to request copies of documents, nor to request waivers, or clarification of requirements on current contracts. Comments submitted on this form do not constitute or imply authorization to waive any portion of the referenced document(s) or to amend contractual requirements.

I RECOMMEND A CHANGE:	1. DOCUMENT NUMBER MIL-S-82793	2. DOCUMENT DATE (YYMMDD) 29 December 1989

3. DOCUMENT TITLE
SEALANT, UF 3195

4. NATURE OF CHANGE (*Identify paragraph number and include proposed rewrite, if possible. Attach extra sheets as needed.*)

5. REASON FOR RECOMMENDATION

6. SUBMITTER

a. NAME (Last, First, Middle Initial)	b. ORGANIZATION	
c. ADDRESS (Include Zip Code)	d. TELEPHONE (Include Area Code) (1) Commercial (2) AUTOVON (If applicable)	7. DATE SUBMITTED (YYMMDD)

8. PREPARING ACTIVITY NAVAL ORDNANCE STATION (CODE 3730) INDIAN HEAD, MD 20640-5000

a. NAME	b. TELEPHONE (Include Area Code) (1) Commercial (2) AUTOVON
c. ADDRESS (Include Zip Code)	IF YOU DO NOT RECEIVE A REPLY WITHIN 45 DAYS, CONTACT: Defense Quality and Standardization Office 5203 Leesburg Pike, Suite 1403, Falls Church, VA 22041-3466 Telephone (703) 756-2340 AUTOVON 289-2340

Downloaded from http://www.everyspec.com