21 SEP 81
SUPERSEDING
MIL-S-6551 (USAF)
25 July 1952

MILITARY SPECIFICATION

SEAT, CREW, DOWNWARD EJECTION, AIRCRAFT

This specification is approved for use by the Department of the Air Force, and is available for use by all Departments and Agencies of the Department of Defense.

1. SCOPE

1.1 Scope. This specification establishes the requirements for two types of aircraft adjustable crew seats for downward ejection as follows:

Type H-1	Seat with diagonal adjustment for pilots, co-pilots, and other crew members who may require diagonal adjustment.
Type H-2	Seat with vertical adjustment only for navigators, bombardiers, radio operators, et cetera.

2. APPLICABLE DOCUMENTS

* 2.1 Issue of Documents. The following documents of the issue in effect on date of invitation for bids or request for proposal, form a part of this specification to the extent specified herein.

SPECIFICATIONS

Federal

QQ-P-416	Plating, Cadmium (Electrodeposited)
TT-L-20	Lacquer, Camouflage
PPP-B-601	Boxes, Wood, Cleated-Plywood

Beneficial comments (recommendations, additions, deletions) and any pertinent data which may be of use in improving this document should be addressed to: HQ AFLC CASO/LODS, Federal Center, Battle Creek MI 49016 by using the self-addressed Standardization Document Improvement Proposal (DD Form 1426) appearing at the end of this document or by letter.

Military

MIL-P-116	Preservation, Method of
DOD-D-1000	Drawings, Engineering & Associated Lists
MIL-M-3171	Magnesium Alloy, Processes for Pretreatment and Prevention of Corrosion on
MIL-E-5272	Environmental Testing, Aeronautical and Associated Equipment, General, Specification for
MIL-R-8236	Reel, Shoulder Harness, Inertia Lock
MIL-A-8625	Anodic Coatings, for Aluminum and Alloys
MIL-P-23377	Primer Coating, Epoxy Polyamide, Chemical and Solvent Resistant

STANDARDS

Federal

FED-STD-595	Colors

Military

MIL-STD-129	Marking of Shipments
MIL-STD-143	Specification and Standards: Order of Precedence for the Selection of
MIL-STD-831	Test Reports, Preparation of
MIL-STD-838	Lubrication of Military Equipment
MIL-STD-846	Escape System Testing, Ground Track and Flight Test
MIL-STD-1186	Cushioning, Anchoring, Bracing, Blocking, and Waterproofing with Appropriate Test Methods

Drawings:

Air Force

46D128	Reel Installation - Shoulder Harness Inertia Lock
50D3772	Harness - Shoulder Safety, Type G-3
51H3977	Belt, Safety, Aircraft, Lap, Type B-18
52F6624	Strap, Safety, Lap Belt, Tie down

Frankford Arsenal

BLX-32-4	Initiator, M-3, Aircraft Personnel Catapult, Installation Dimensions
BLX-74-12	Catapult, Aircraft Personnel, T9E3(M-4) Installation Dimensions

(Copies of specifications, standards, drawings and publications required by contractors in connection with specific procurement functions should be obtained from the procuring activity or as directed by the contracting officer.)

3. REQUIREMENTS

3.1 Materials. Materials and processes used in the seat shall be of a high quality, suitable for the purpose, and shall conform to applicable detail Government specifications. Specifications and standards for all materials, processes, parts and equipment which are not specifically designated herein and which are necessary for the execution of this specification shall be selected in accordance with MIL-STD-143.

3.1.1 Standard parts. AN standard parts and AN standard part numbers therefor shall be used wherever they are suitable for the purpose. Commercial utility parts such as screws, bolts, nuts, washers, cotter pins, fluid fittings, etc, may be used provided they are replaceable by AN standard parts without alteration, and provided the corresponding AN part numbers are referenced on the drawings and in the parts lists. In applications for which no suitable corresponding AN part is in effect on date of invitation for bids, commercial parts may be used provided they conform to all requirements of this specification.

3.1.2 Protective treatment. When materials are used in the construction of the seat that are subject to corrosion in salt air or other atmospheric conditions likely to occur during service usage, they shall be protected against such corrosion in a manner that will in no way prevent compliance with the performance requirements of this specification. The use of any protective coating that will crack, chip or scale with age or extremes of atmospheric conditions shall be avoided.

* 3.1.3 Reclaimed materials. The use of reclaimed materials shall be encouraged to the maximum extent possible.

3.2 Design. The crew ejection seat shall be designed to the general configuration of Figures 1, 2, 3, 4, 5, 6, and 7.

3.2.1 Seat adjustment.

3.2.1.1 Vertical and fore-and-aft adjustment. The type H-1 seat shall be provided with a combined vertical and fore-and-aft adjustment as shown in Figure 7. The seat shall be provided with either a loading mechanism or a positive action mechanism (such as a jack) for accomplishing the adjustment. If provided with a loading mechanism, the force on the seat produced by the mechanism shall not exceed 150 pounds when the seat is in the lowest position and shall not be less than 35 pounds when at the highest position. Rubber shock cords shall not be used for this purpose. Where a loading mechanism is used, adjustment should be provided in increments of from 1/2 to 3/4 inch.

3.2.1.2 Vertical adjustment. The type H-2 seat adjustment requirements shall be in accordance with paragraph 3.2.1.1 except that the seat shall be provided with a 4 inch vertical adjustment only. This adjustment may be along a line parallel to the ejection angle.

3.2.1.3 Locking mechanism. The lever for operating the seat adjustment shall be located on the right hand side of the seat as shown in Figure 1. The locking system shall be designed to lock the seat in the adjusted position and retain it under the full ejection load. The lever and locking system shall be designed in such a way that the lever cannot be moved into the locked position unless the seat is positively locked.

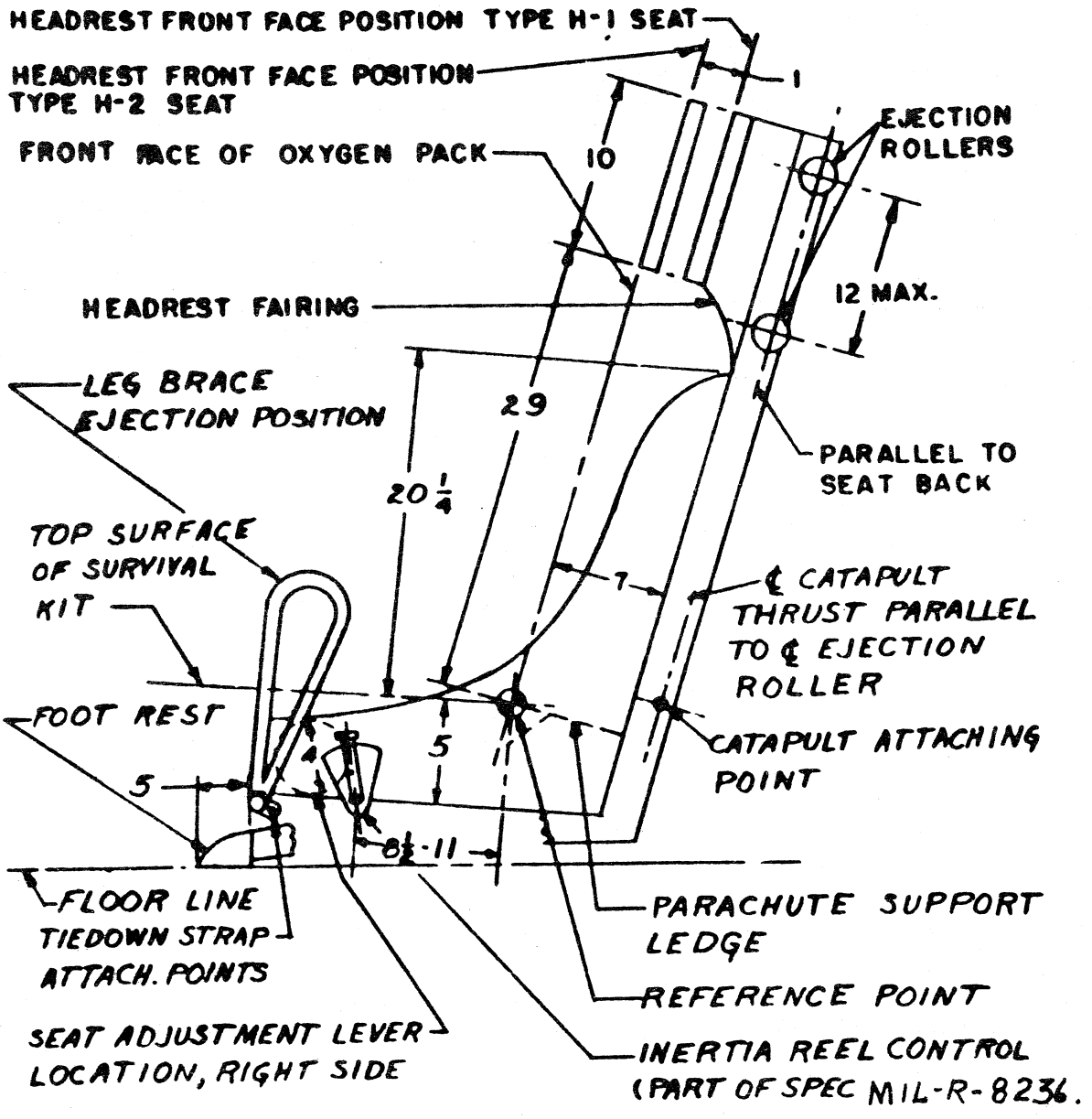

DIMENSIONS IN INCHES.
UNLESS OTHERWISE SPECIFIED,
TOLERANCES: FRACTION ± 1/8
DECIMALS ~
ANGLES ~

FIGURE 1

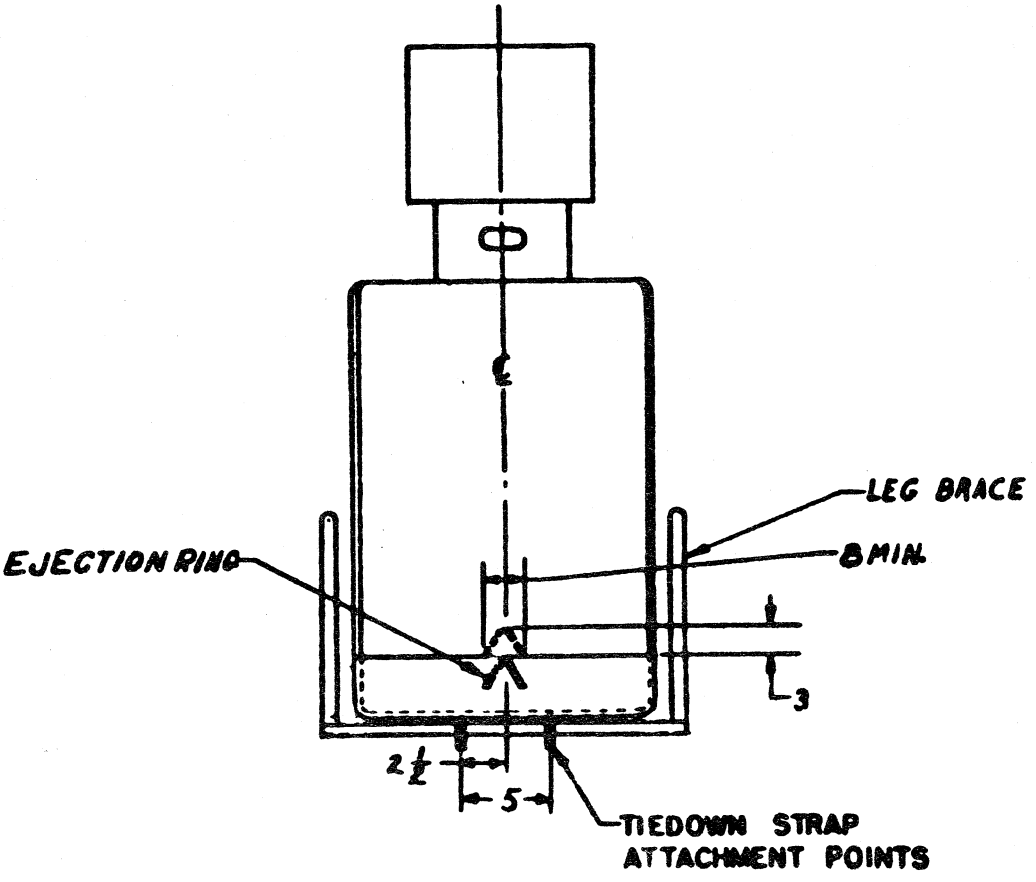

DIMENSIONS IN INCHES.
UNLESS OTHERWISE SPECIFIED,
TOLERANCES: FRACTIONS ± 1/8
DECIMALS —
ANGLES —

FRONT VIEW

FIGURE 2

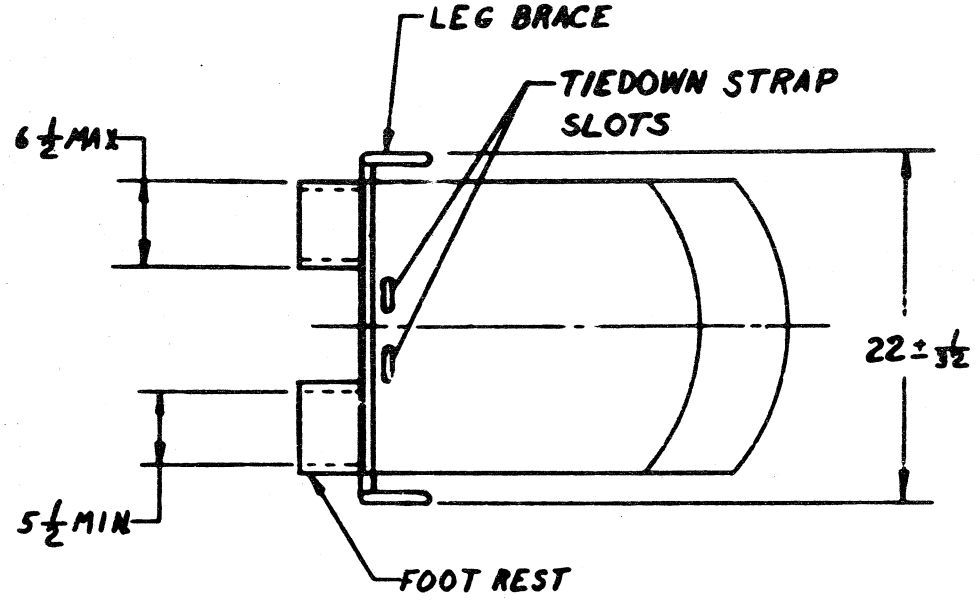

DIMENSIONS IN INCHES.
UNLESS OTHERWISE SPECIFIED,
TOLERANCES: FRACTIONS –
DECIMALS —
ANGLES –

BOTTOM VIEW

FIGURE 3

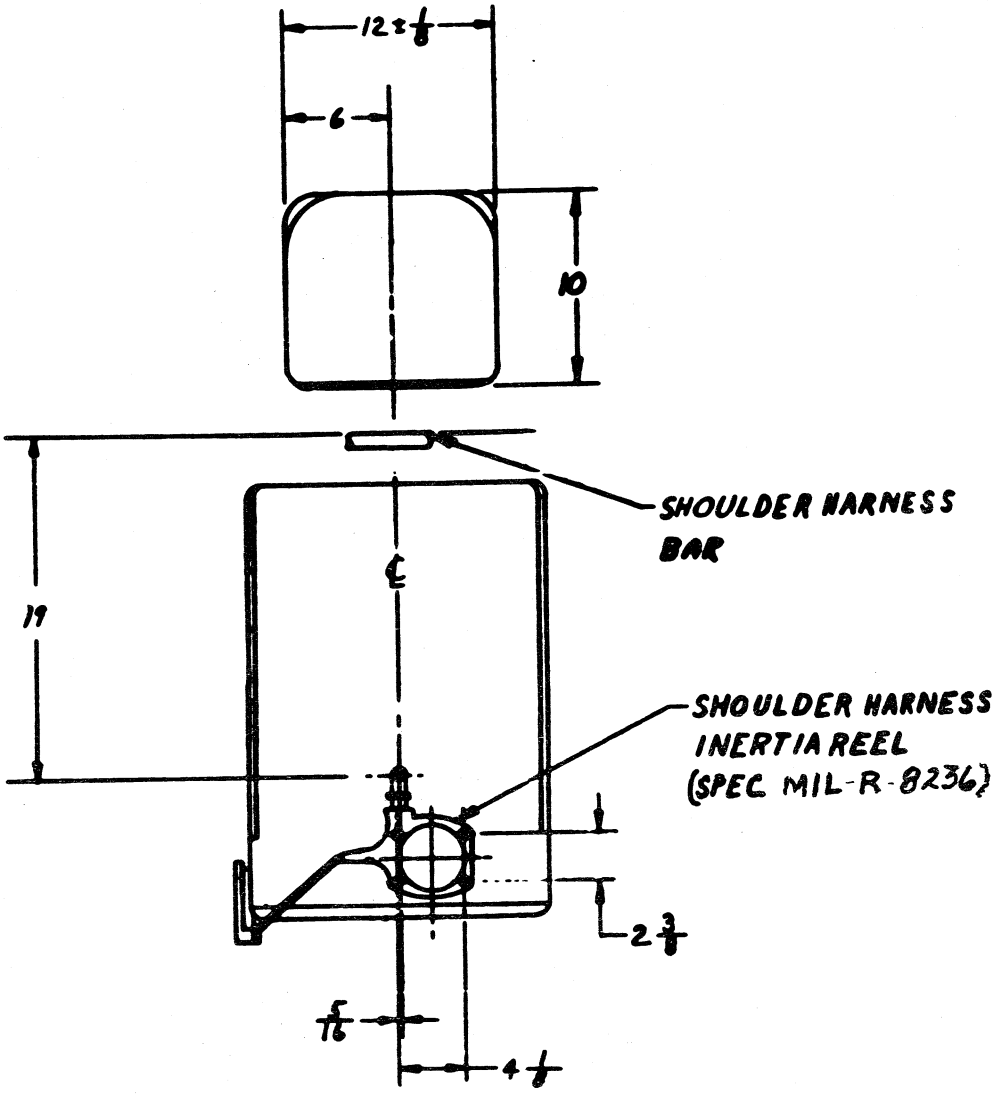

DIMENSIONS IN INCHES.
UNLESS OTHERWISE SPECIFIED,
TOLERANCES: FRACTIONS ± 1/32
DECIMALS —
ANGLES —

BACK VIEW

FIGURE 4

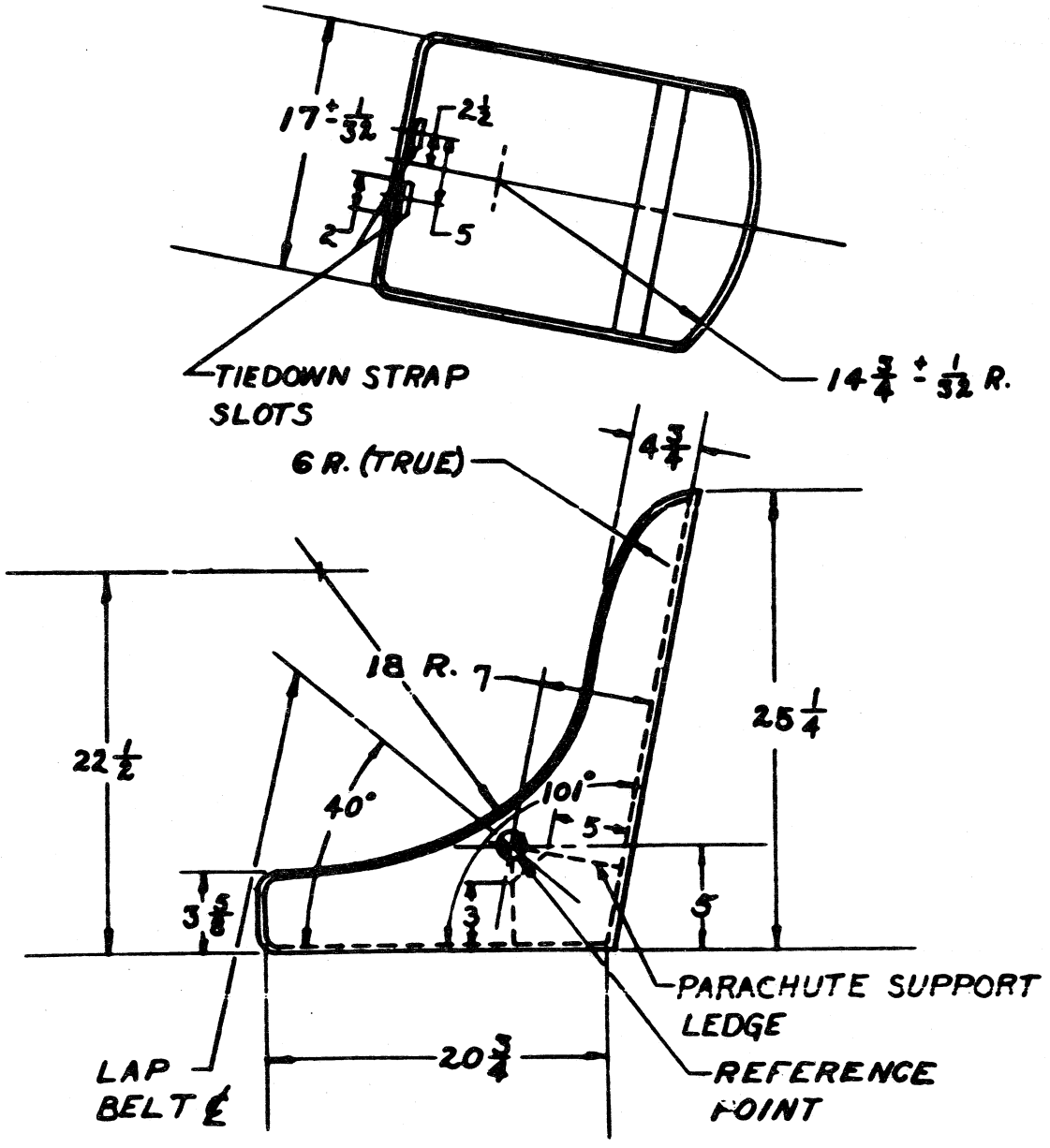

DIMENSIONS IN INCHES.
UNLESS OTHERWISE SPECIFIED,
TOLERANCES: FRACTIONS ± 1/8
DECIMALS ~
ANGLES ± 1/2°

SEAT BUCKET DETAIL
FIGURE 5

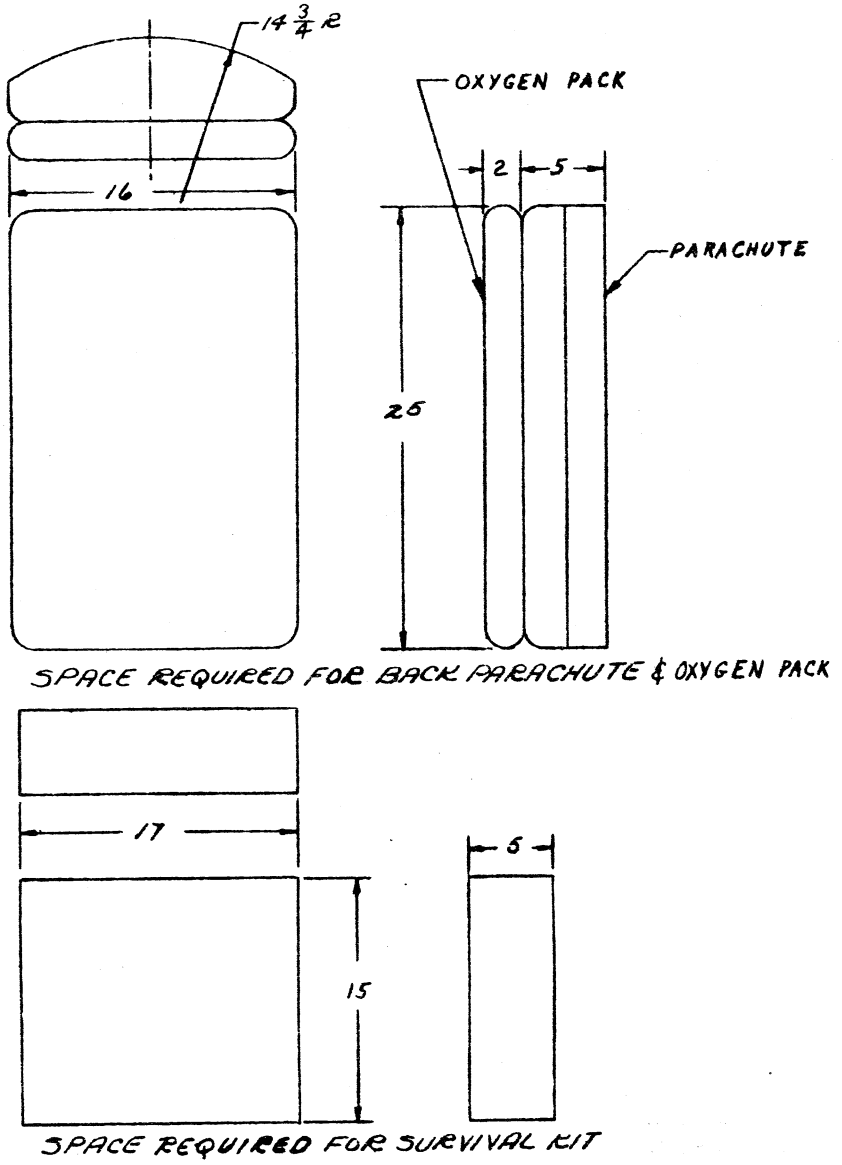

DIMENSIONS IN INCHES.
UNLESS OTHERWISE SPECIFIED,
TOLERANCES: FRACTION ± 1/8
DECIMALS
ANGLES

BACK PARACHUTE & OXYGEN PACK

FIGURE 6

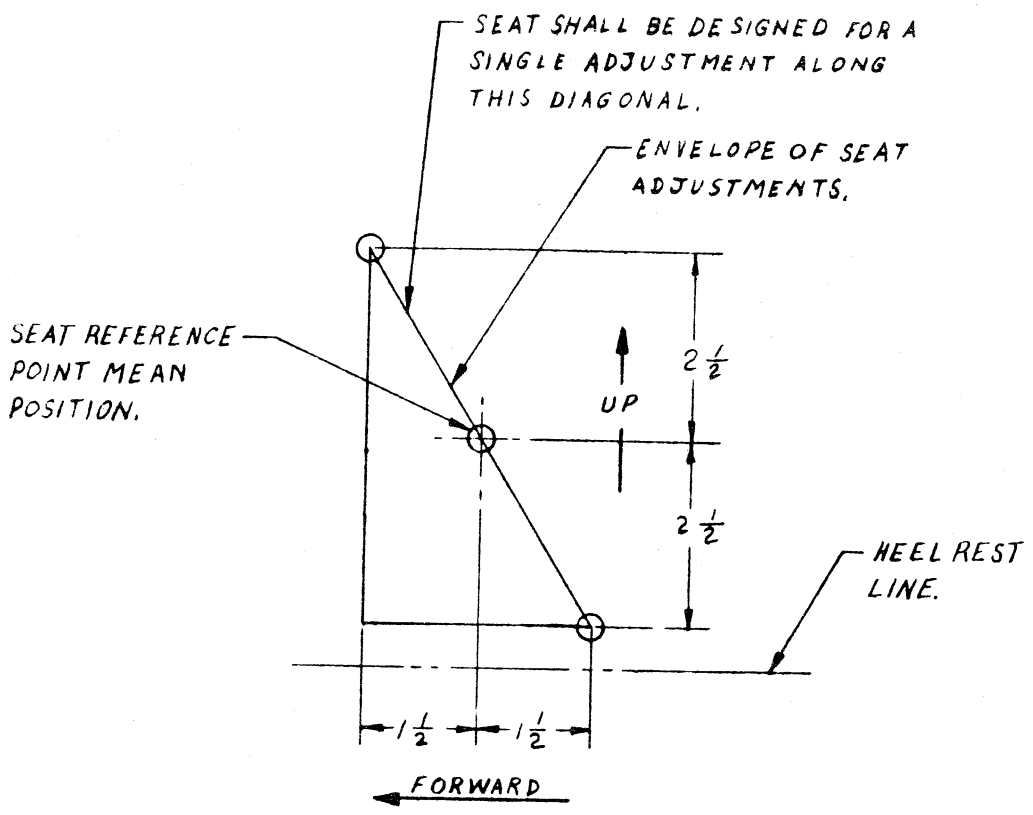

DIMENSIONS IN INCHES.
UNLESS OTHERWISE SPECIFIED,
TOLERANCES: FRACTIONS $\pm \frac{1}{32}$
DECIMALS —
ANGLES —

VERTICAL AND FORE AND AFT ADJUSTMENT

FIGURE 7

3.2.2 Ejection position. The seat may be ejected from any adjusted position. However, the seat shall be bottomed prior to ejection if adequate cockpit and/or hatch clearances are not obtainable for any adjusted position. If the seat is to be bottomed prior to ejection, the emergency control shall be interconnected with the seat adjustment control mechanism so as to cause the seat to automatically move to its lowest and most aft position for ejection. The force tending to move the seat to its lowest position shall have a vertical component equal to three (3) times the sum of the weight of the occupant and his equipment plus the weight of the movable portion of the seat. The time required to move the seat the full adjustment shall be not more than one second. The means provided shall not cause any undesirable jolt to be imposed on the occupant.

3.2.3 Parachute and oxygen pack. The seat back shall provide space for the back-type parachute and oxygen pack. The space requirement for this parachute and oxygen pack is specified in Figure 6.

3.2.3.1 Parachute support. A shelf or ledge shall be provided in the rear bottom portion of the seat located on a line through the reference point perpendicular to the seat back and so designed that no matter what the height adjustment of the seat, the full weight of the parachute as worn by the occupant will be borne by the ledge or shelf, and the harness of the parachute shall be slack at the shoulder of the wearer. This shelf, or ledge, shall not touch any portion of the body of the user nor interfere in any way with the comfort characteristics of the seat. The top forward edge shall be beveled as shown in Figure 5.

3.2.4 Survival kit. The seat bottom shall provide space for a survival kit. The space requirement for the survival kit is specified in Figure 6. The 17-inch dimension shall be placed transversely in the seat pan. It is intended that the survival kit be placed in the pan so that it extends from the front of the pan to the reference plane.

3.2.5 Disconnect. Provision shall be made for the attachment of an emergency disconnect fitting for personal leads on the left side of the seat. This disconnect will provide for the automatic separation of the crew members' personal leads upon ejection. The contractor shall fabricate the disconnect in accordance with applicable drawings and specifications to be provided by the Procuring Agency.

3.2.6 Safety belt. Provisions shall be made for use of the Type B-18 safety belt, conforming to drawing No 51H3977. The belt shall be attached with a 1/4 inch diameter bolt which shall be placed in double shear. The point of attachment to the seat shall be so located that when the belt is inclined upward and forward with the plane of the belt at an angle of 40° to the plane of the seat bottom, the center line of the belt shall pass through the reference point.

3.2.6.1 Tiedown strap. Provisions shall be made for the use of the tiedown strap conforming to Drawing No 52F6624.

3.2.7 Shoulder harness. Provisions shall be made for the use of the G-3 shoulder harness conforming to Drawing No 50D3772.

3.2.8 Shoulder harness reel. The seat shall incorporate the shoulder harness take-up inertia lock reel, conforming to Specification MIL-R-8236, installed in accordance with Drawing No 46D128 as shown in Figure 4. The reel shall be located on the stationary part of the seat, as is the shoulder harness support, when the seat bucket is adjustable with respect to the bucket support structure. In addition to the quadrant control shown on Drawing 46D128, the inertia lock reel shall be locked when the emergency control is operated.

3.2.9 Shoulder harness support structure.

3.2.9.1 Seat bucket adjustable with respect to bucket support structure. The shoulder harness support shall be a part of the stationary seat structure and shall be located 30 inches above the seat reference point when the seat is adjusted to the down or lowest position.

3.2.9.2 Seat bucket stationary with respect to bucket support structure. The shoulder harness support shall be located 27 inches above the seat reference point.

3.2.10 Upholstery. The seat shall be padded on the head rest. The permanent padding shall be of a high energy absorbing material approved by the Procuring Agency. Padding thickness shall be a minimum of 1/2 inch. The color shall be maroon red, color No 21136 of Federal Standard 595.

3.2.11 Head rest.

3.2.11.1 The front face of the head rest shall be parallel to a reference plane which passes through the front surface of the oxygen pack. The top of the head rest shall be located 39 inches from the seat reference point measured parallel to the seat back when the seat is in the bottom or lowest position. To avoid interference with the parachute, the underside of the head rest shall be faired in as shown in Figure 1.

3.2.11.2 Type H-1 seat. When the seat is bottomed prior to ejection, the front surface of the head rest shall be located one inch to the rear of the reference plane with the seat in the bottom position. If the seat is ejectable from any position, the front surface of the head rest shall be located one inch to the rear of the reference plane in all positions of adjustment.

3.2.11.3 Type H-2 seat. The front surface of the head rest shall be located in the reference plane.

3.2.12 Foot rests. Foot rests shall be provided at the front of the seat pan (see Figure 1). They shall be of the type which remain at the level of and are parallel to the floor as the seat is adjusted. The foot rests shall have retainers which shall be so designed that they will laterally restrain the occupant's feet and prevent them from moving upward during downward ejection, regardless of whether the occupant is wearing cold weather flying boots or standard shoes. The method of accomplishing this vertical restraint shall be such that the occupant's feet shall be automatically released after ejection. The foot rests shall not have any sharp edges.

3.2.13 Leg braces. Retractable leg braces shall be provided on the seat to laterally brace the legs on the outboard side during ejection. They shall be located substantially as shown on Figure 1 and shall be interconnected to move into position simultaneously. The leg braces may perform the functions of pre-ejection controls in that the motion of raising the leg braces may be utilized to perform such functions as releasing cabin or cockpit pressure, stowing the control column, etc. The leg braces shall be faired in to eliminate the possibility of fouling the crew members personal equipment and/or clothing upon separation from the seat after ejection.

3.2.14 Ejection or emergency controls. Ejection controls shall be incorporated in the leg braces at the sides of the seat and in an ejection ring to be located on the forward edge of the seat as shown in Figure 2. To ensure that the ejection ring will be within reach of the occupant when seated in the ejection position, the design shall be such that the upper gripping surface shall automatically extend upward three inches above the edge of the seat when the leg braces are moved into the locked position.

3.2.14.1 Sequence "A" - seat bottomed prior to ejection. The first movement of the leg braces shall cause the seat to move to the bottom position. When the seat has reached the bottom position, it shall then be possible to pull the leg braces into the locked position. This motion shall lock the shoulder harness take-up reel. Pulling the ejection ring shall perform the following operations: 1. Jettison the escape hatch. 2. Fire the catapult initiator which in turn fires the catapult. It shall not be possible to perform the second operation until the escape hatch has been jettisoned. This shall be accomplished by an interconnection between the hatch and the initiator safety pin which shall provide for the removal of the initiator safety pin when the hatch is jettisoned.

3.2.14.2 Sequence "B" - seat ejectable from any position. Movement of the leg braces into a locked position shall lock the shoulder harness take-up reel. Pulling the ejection ring shall perform the following operations: 1. Jettison the escape hatch. 2. Fire the catapult initiator which in turn fires the catapult. It shall not be possible to perform the second operation until the escape hatch has been jettisoned. This shall be accomplished by an interconnection between the hatch and the initiator safety pin which shall provide for the removal of the initiator safety pin when the hatch is jettisoned.

3.2.14.3 The ejection controls shall be so designed that it shall not be possible to pull the ejection ring unless the leg braces have first been moved into the locked position. Movement of the ejection ring to accomplish firing shall be kept to a minimum, not to exceed two inches, and shall be restrained from further movement after the initiator has been fired. A maximum of 40 pounds force applied to the ejection ring shall perform the operations noted in paragraph 3.2.14.1 or paragraph 3.2.14.2.

3.2.14.4 Catapult initiator. The purpose of the initiator is to reduce the complexity of the controls between the ejection ring and the catapult. Application of .75 inches of motion to the initiator firing pin is required to fire the initiator cartridge. Firing of the initiator supplies gas

pressure through a 1/4 inch hydraulic hose line, connected to the catapult, to fire the catapult cartridge. The initiator and hydraulic hose line are included in the catapult assembly. The length of the hydraulic hose line as furnished may be reduced to suit the seat installation but it shall not be less than four feet. The initiator shall be installed on the seat in a position as close to the ejection ring as possible.

3.2.15 Ejection rails. A set of ejection rails shall be furnished with the seat. The rails shall be of a cross section to accommodate the rollers or slide blocks and to support the loads imposed by the strength requirements of the seat. The ejection rails shall be made sufficiently rigid to prevent any deflection which would cause binding of the rollers or slide blocks or allow them to jump the rails. In the airplane it is intended that the rails will extend downward as far as possible to provide a maximum of seat guidance during ejection.

3.2.16 Drain holes. Drain holes shall be provided in the bottom of the seat and in the parachute shelf or ledge to drain the seat bottom and parachute shelf or ledge when the airplane is in the normal or ground attitude.

3.2.17 Ejection rollers. The center line of the ejection rollers or slide blocks shall be parallel to the seat back. In order to provide a maximum of guided travel of the seat in the rails, the rollers or slide blocks shall be mounted as high as practicable on the seat.

3.2.18 Attachment. The attachment of the catapult to the seat shall be made through a fitting on the seat frame (See Figure 1) which shall receive the block of the personnel catapult. Installation dimensions for the catapult are covered by Frankford Arsenal Drawing BLX-74-12, entitled "Catapult, Aircraft Personnel, T9E3(M-4) Installation Dimensions" and Drawing BLX-32-4, entitled, "Initiator, M-3 Aircraft Personnel Catapult, Installations Dimensions."

3.2.19 Safety wire. Safety or lock wire shall not be used to secure the ejection controls, leg braces, foot restraints, etc, in the locked or retracted position.

3.3 Construction.

3.3.1 Methods. Riveting or welding may be used for assembly of component parts fabricated of metals which are suitable for this type of construction. Fittings and joints which will require disassembly for installation or removal of the seat from the airplane or for disassembly of the component parts of the seat shall be bolted.

3.3.2 Projection. The inside surfaces of the seat shall be free from projections which could catch or damage by abrasion the parachute pack or the clothing of the crew member. The exterior surfaces of the seat shall be free from sharp edges or any projection which might scratch the hands or clothing of the crew member as he moves his arms about the sides of the seat to handle equipment within his reach to the rear and to the side. The seat design shall be free of all projections which might foul personal equipment or jeopardize operation of other seat components.

3.3.3 Strength requirement. The crew ejection seat shall have sufficient strength to carry the following loads:

3.3.3.1 Personnel catapult load. A load of 4300 pounds ultimate, 2850 pounds proof shall be applied upward parallel to the centerline of the rollers and through the combined center of gravity of the seat and pilot. The load shall be applied to the safety belt and the tiedown strap. (In determining the above combined center of gravity, the center of gravity of the pilot may be considered as being nine inches from the top of the survival kit and 11.5 inches from the forward face of the parachute). If the seat is required to be bottomed prior to ejection, the seat shall be adjusted to the down (ejection) position during this test. If the seat is ejected from any position, it shall be adjusted to the high forward position where diagonal adjustment is required.

3.3.3.2 Front edge. The seat shall withstand a load of 400 pounds ultimate, 270 pounds proof, applied to the top front edge of the seat bottom over a length extending 1-1/2 inches to each side of the center of the seat, with the seat bottom horizontal.

3.3.3.3 Ejection ring. The ejection ring and the connecting controls to the initiator firing pin shall withstand a load of 350 pounds ultimate.

3.3.3.4 Parachute support ledge. The parachute support ledge shall withstand a load of 400 pounds ultimate, 270 pounds proof, distributed over an area extending four inches to either side of the center of the seat and applied perpendicular to the upper surface of the support edge.

3.3.3.5 Leg braces. Each of the leg braces shall be capable of withstanding a side load of 500 pounds ultimate, 330 pounds proof, applied outward perpendicular to the leg brace and distributed over that portion of the leg brace that would be contacted by the leg of the crew member during ejection.

3.3.3.6 Foot retainer. A load of 275 pounds ultimate, 180 pounds proof, shall be applied upward and parallel to the center line of the rollers equally distributed over the contact surfaces of each foot retainer.

3.3.3.7 Head rest. A load of 500 pounds ultimate, 330 pounds proof, shall be applied aft in a direction parallel to the seat bottom equally distributed over an area of 2 inches square at the center of the head rest.

3.3.3.8 Crash loads.

3.3.3.8.1 Forward. A load of 5,760 pounds ultimate, 3,840 pounds proof, shall be applied to the lap belt mountings on the side of the seat in a direction inclined 40 degrees up from the bottom of the seat. A load of 2,400 pounds ultimate, 1,600 pounds proof, shall be applied to the tiedown strap, in an upward direction, perpendicular to the seat bottom (pan). A load of 3,600 pounds ultimate, 2,400 pounds proof, shall be applied to the shoulder harness take-up reel, in the unlocked extended position, in a forward direction parallel to the seat bottom over the shoulder harness support structure. These loads shall be applied simultaneously and the seat shall be adjusted to the mid-position during this test.

3.3.3.8.2 Sides. The load requirements shall be identical to those specified in paragraph 3.3.3.8.1 with the exception that the direction of application of the loads shall be 20 degrees to either side of the forward direction.

3.3.3.8.3 Downward. A load of 4,000 pounds ultimate, 2,665 pounds proof, shall be applied downward perpendicular to the seat bottom (pan) and through the center of gravity of the crew member. The load shall be distributed over the seat bottom. The seat shall be adjusted to the up position during the test.

3.3.3.8.4 Back. A load of 3,000 pounds ultimate, 2,000 pounds proof, shall be uniformly distributed over an area on the inside face of the seat back equal to that occupied by the parachute and applied perpendicular to the surface of the seat back. The maximum deflection of the seat back shall not exceed 5/8-inch while the seat supports the ultimate load. The seat shall be adjusted to the up position during this test.

3.4 Interchangeability. All parts having the same manufacturer's part number shall be directly and completely interchangeable with each other with respect to installation and performance. Changes in manufacturer's part numbers shall be governed by the drawing number requirements of Specification DOD-D-1000.

3.5 Dimensions. The outline dimensions of the seat shall be generally within the limiting dimensions specified in Figures 1, 2, 3, 4, 5, and 6. Unless otherwise specified, a tolerance of plus or minus 1/8-inch will be allowed on the dimensions.

3.6 Weight. The weight of the part of the crew ejection seat that is ejected shall not exceed the following:

Type H-1:	75 pounds
Type H-2:	60 pounds

3.7 Color. The seat color shall be lacquer in accordance with Specification No TT-L-20.

3.8 Finish. Aluminum alloy parts shall be anodically treated in accordance with MIL-A-8625, Type I and II as applicable and non-corrosion-resisting steel parts shall be cadmium plated in accordance with Specification QQ-P-416. Aluminum alloy 7079 shall not be used. The metal seat assembly shall be finished with one coat of primer conforming to Specification MIL-P-23377 and top-coated with two coats of lacquer conforming to Specification TT-L-20 (color 36231) except magnesium parts which shall receive two coats of primer and two coats of aluminumized lacquer. Magnesium alloy parts shall be treated in accordance with Specification MIL-M-3171 prior to coating with primer and lacquer.

3.9 Nameplate. A nameplate, permanently and legibly filled in with the following information, shall be securely attached to the inner right side of seat bucket in a location capable of being read after the seat is installed:

Seat, Crew, Downward Ejection, Aircraft
Type (Insert Applicable Type)
Specification No MIL-S-6551(USAF)
Mfr's Part No _____
Order No _____
Stock No _____
Mfr's Name or Trademark _____
US Property

3.9.1 Manufacturer's Part No. The manufacturer's part number marked in the space provided in the name plate shall be identical with the manufacturer's engineering production drawing number, including applicable dash numbers, if the drawing is tabulated and covers more than one part.

3.9.2 Order No. Where both the order number such as "F33657-78-C-7410-0003" and the contract number, such as "F33657-78-C-7410" are given on an order or contract, the number placed on the nameplate in the place designated "Order No" shall be the number corresponding to the Air Force order number, for example, "F33657-78-C-7410-0003."

3.9.3 Stock No. The stock number entered in the space provided on the nameplate shall be as specified by the Procuring Agency. The stock number shall include the name or standard abbreviation of the name of the service having jurisdiction of the equipment.

3.10 Workmanship. Workmanship and finish on all parts shall be in accordance with high grade manufacturing practice covering this class of equipment.

3.11 Cleaning. All parts shall be clean and free from dirt, sand, metal chips or foreign matter, while being assembled.

3.12 Lubrication. Lubrication used shall conform to the requirements of Specification MIL-STD-838. Lubrication shall function satisfactorily within the temperature range of minus 65 degrees and plus 160 degrees Fahrenheit.

* 4. QUALITY ASSURANCE PROVISIONS

4.1 Classification of tests. The inspection and testing of the seats shall be classified as follows:

a. Acceptance tests . . . . . See 4.2

b. Preproduction testing. . . . . See 4.5

4.2 Acceptance tests. Acceptance tests shall consist of:

a. Individual test

b. Sampling plan and tests

4.2.1 Individual tests. Each seat shall be subjected to the following tests as described under 4.4 "Test Methods" of this specification:

a. Examination of product

b. Functional tests

4.2.2 Sampling plan and tests. Sample seats shall be selected at random from each lot on the same material order, in the quantities specified below for compliance with 4.4.3.

a. Two seats from each lot of 400 or fraction thereof.

b. Three seats from each lot of 800 or fraction thereof, above 400.

c. One seat from each additional 800 or fraction thereof, above 800.

4.2.3 Rejection and retest. Failure of any seat to pass the acceptance tests shall be cause for rejection of the entire lot represented. If in the opinion of the inspector, such failure is attributable to faulty workmanship or other defects not likely to occur throughout the lot, the contractor may test three additional seats selected at random from the lot. Failure of any one of these additional seats shall be cause for the final rejection of the entire lot represented.

4.3 Test conditions. The test conditions are described under the individual tests to which they apply.

4.4 Test methods.

4.4.1 Examination of product. Each seat shall be carefully examined to determine conformance to this specification with respect to design, standard parts, finish, adjustments, dimensions, workmanship, material, weight, and marking. Special attention shall be given to the ejection control mechanism.

4.4.2 Functional tests. The seat shall be mounted in a suitable jig or fixture and the complete operation of the seat mechanism shall be checked up to the actuation of the cartridge devices. The force required to actuate the ejection control shall be in accordance with 3.2.14.3. The amount of travel obtained at the seat catapult initiator, when the ejection control is actuated, shall be as specified in 3.2.14.4.

4.4.3 Strength. Conformance to strength requirements shall be determined by testing the seat as specified in 3.3.3.1 through 3.3.3.8.4, except that proof loads shall be used instead of ultimate loads. No part of the seat shall show a permanent set as a result of these tests.

4.4.4 Structural tests. The sample seat shall be mounted on the ejection rails and retained in a test jig by the fitting which receives the catapult trunnion. The seat shall then be subjected to, and be required to withstand without failure, the ultimate loads specified in 3.3.3.1 through 3.3.3.4, inclusive. These loads shall be applied to the seat without cushions. The attitude of the seat during the test may be changed to facilitate testing if the direction of the loads, with respect to the seat, remains the same. The loads may be applied by means of hydraulic or pneumatic press, jacks, shot bags, or any other suitable method. The lap belt and shoulder harness mountings shall be loaded simultaneously to the ultimate loads specified in 3.3.3.8.1. The lap belt attachment shall be subjected to tests in which the loads are applied to a block or a frame fitted within the seat and held in place by the lap belt attached to the mountings. The block or frame shall be so formed as to cause the belt to pass inward toward the seat from the mountings to the block or frame at an angle to 20 degrees with respect to the plane of the mountings. The loads shall be applied to the shoulder harness take-up reel by means of a shoulder harness or a strap of equivalent dimensions to the shoulder harness attached to the take-up reel cable terminal. The strap or shoulder harness shall be carried up over the shoulder harness support, and the loads applied as indicated in 3.3.3.8.1.

4.4.5 Ejection test. One test sample seat shall be subjected to a ground firing test in accordance with Specification MIL-STD-846.

4.4.6 Environmental tests. One test sample shall be subjected, in the following order, to each of the following environmental tests:

4.4.6.1 High temperature test. High temperature tests shall be in accordance with procedure I of Specification MIL-E-5272. At the conclusion of the test period, and with the seat at the test temperature, the ejection controls, seat adjustment mechanism, and the shoulder harness take-up reel control shall function satisfactorily throughout their entire range of operation.

4.4.6.2 Humidity test. Humidity tests shall be in accordance with procedure I of Specification MIL-E-5272. Upon completion of 120 hours (5 cycles) with condensation remaining on the seat, the ejection controls, seat adjustment mechanism, and shoulder harness take-up reel control shall function satisfactorily throughout their entire range of operation. Upon completion of 360 hours the ejection controls, seat adjustment mechanism, and shoulder harness take-up reel control shall again be tested for satisfactory operation.

4.4.6.3 Low temperature test. The seat shall be soaked at a temperature of -67 degrees Fahrenheit (-55 degrees Centigrade) for a minimum of 24 hours. Upon completion of the test period, with the seat at -67 degrees Fahrenheit, the ejection controls, seat adjustment mechanism, and the shoulder harness take-up reel control shall function satisfactorily throughout their entire range of operation.

4.4.6.4 Altitude test. This test shall be applicable only to seats incorporating electrical devices. The altitude tests shall be in accordance with procedure III of Specification MIL-E-5272 for a test period of 15 minutes. The ambient test temperature shall be -67 degrees Fahrenheit. With the seat at the stipulated pressure and temperature, the ejection controls, seat adjustment mechanism, and the shoulder harness take-up reel control shall be tested for satisfactory operation.

4.4.6.5 Fungus test. If any material utilized in the construction of the seat is suspected to be nutrient to fungi, the material shall be treated to resist fungus growth and shall be tested in accordance with procedure I of Specification MIL-E-5272. The test period shall be 14 days. The material shall not evidence deterioration upon completion of this test.

4.4.6.6 Salt spray test. Salt spray tests shall be in accordance with procedure I of Specification MIL-E-5272. Upon completion of the test period, the ejection controls, seat adjustment mechanism, and the shoulder harness take-up reel control shall function satisfactorily throughout their entire range of operation.

4.4.6.7 Sand and dust test. Sand and dust tests shall be in accordance with procedure I of Specification MIL-E-5272. Upon completion of the test period, the ejection controls, seat adjustment mechanism, and the shoulder harness take-up reel control shall function satisfactorily throughout their entire range of operation.

4.5 Preproduction testing.

4.5.1 Preproduction test sample tested by the contractor. The contractor shall subject a sample seat to the preproduction test specified in 4.4.1 through 4.4.6.7, with the exception of the strength test, 4.4.3.

4.5.2 Preproduction test report. After the contractor completes the preproduction tests, he shall prepare a preproduction test report according to MIL-STD-831 and furnish three complete copies of the report to the procuring activity.

4.5.3 Preproduction test sample for the procuring activity. Along with the preproduction test report, the contractor shall submit a sample to the procuring activity who will use it.

a. For a review of the mechanical construction of the product.

b. To perform any tests, included in the specification, after reviewing the contractor's test report.

* 5. PACKAGING

5.1 Preservation packaging shall be Level A or C as specified (see 6.2).

5.1.1 Level A.

5.1.2 Unit packaging. Unless otherwise specified (see 6.2) each individual seat shall be packaged and preserved in accordance with MIL-P-116, method IA, without the addition of a contact preservative.

5.1.3 Level C. Seals shall be clean dry and individually packaged in manner that will afford adequate protection against corrosion, deterioration and physical damage during shipment from supply source to the first receiving activity.

5.2 Packing. Packing shall be level A, B or C as specified.

5.2.1 Level A. Seats preserved and packaged as specified in 5.1.1 shall be packed in a container conforming to PPP-B-601 overseas type. Skid shall be provided to facilitate machine handling. As far as practical, container shall be of uniform size and shape and of minimum tare and cube consistent with the protection required. Closure and strapping shall be in accordance with the appendix of the box specification.

5.2.2 Level B. Level B shall be the same as Level A except PPP-B-601 shall be domestic type. Skids shall be provided to facilitate machine handling.

5.2.3 Level C. The seats preserved and packaged as specified in 5.1 shall be packed in manner to insure carrier acceptance and safe delivery at destination. Containers shall be in accordance with either the Uniform Freight Classification Rules or regulations of other carrier as applicable to the mode of transportation.

5.3 Physical Protection. The seats shall be cushioned, anchored, blocked and braced in accordance with MIL-STD-1186. The freefall drop test, edgewise drop tests and commercial drop tests shall be in accordance with Appendix A of MIL-STD-1186. The tests are not required when Level C packing is specified.

5.4 Marking. In addition to any special marking required by the contract or order (see 6.2), interior package and exterior shipping containers shall be marked in accordance with MIL-STD-129.

6. NOTES

6.1 Use. These downward ejection seats are intended for use in aircraft by the pilot, co-pilot, and other crew members.

* 6.2 Ordering data. Invitations for bid, contracts and purchase orders should specify the following:

a. Title, number, and date of this specification.

b. Applicable levels of preservation and packaging, and packing.

* 6.2.1 Preproduction tests. It is expected that the contract or purchase order will specify that a minimum of three seats will be required as preproduction samples to be subjected to preproduction tests by the contractor to determine compliance with the requirements of this specification and that one seat will be required as a preproduction sample to be submitted to the procuring agency.

6.3 Changes from previous issue. The margins of this specification are marked with an asterisk to indicate where changes (additions, modifications, corrections, deletions) from the previous issue were made. This was done as a convenience only and the Government assumes no liability whatsoever for any inaccuracies in these notations. Bidders and contractors are cautioned to evaluate the requirements of this document based on the entire content irrespective of the marginal notations and relationship to the last previous issue.

Custodian:

Air Force - 99

Review activities:

Air Force - 11

Navy - AS

Preparing activity:

Air Force - 99

(Project 1680-F421)

STANDARDIZATION DOCUMENT IMPROVEMENT PROPOSAL

INSTRUCTIONS: This form is provided to solicit beneficial comments which may improve this document and enhance its use. DoD contractors, government activities, manufacturers, vendors, or other prospective users of the document are invited to submit comments to the government. Fold on lines on reverse side, staple in corner, and send to preparing activity. Attach any pertinent data which may be of use in improving this document. If there are additional papers, attach to form and place both in an envelope addressed to preparing activity. A response will be provided to the submitter, when name and address is provided, within 30 days indicating that the 1426 was received and when any appropriate action on it will be completed.

NOTE: This form shall not be used to submit requests for waivers, deviations or clarification of specification requirements on current contracts. Comments submitted on this form do not constitute or imply authorization to waive any portion of the referenced document(s) or to amend contractual requirements.

DOCUMENT IDENTIFIER *(Number)* AND TITLE

MIL-S-6551A

NAME OF ORGANIZATION AND ADDRESS OF SUBMITTER

☐ VENDOR ☐ USER ☐ MANUFACTURER

1. ☐ HAS ANY PART OF THE DOCUMENT CREATED PROBLEMS OR REQUIRED INTERPRETATION IN PROCUREMENT USE? ☐ IS ANY PART OF IT TOO RIGID, RESTRICTIVE, LOOSE OR AMBIGUOUS? PLEASE EXPLAIN BELOW.

A. GIVE PARAGRAPH NUMBER AND WORDING

B. RECOMMENDED WORDING CHANGE

C. REASON FOR RECOMMENDED CHANGE(S)

2. REMARKS

SUBMITTED BY *(Printed or typed name and address — Optional)*

TELEPHONE NO.

DATE

DD FORM 1 OCT 76 1426 PREVIOUS EDITION WILL BE USED.

FOLD

DEPARTMENT OF THE AIR FORCE

OFFICIAL BUSINESS
PENALTY FOR PRIVATE USE $300

NO POSTAGE
NECESSARY
IF MAILED
IN THE
UNITED STATES

BUSINESS REPLY MAIL

FIRST CLASS PERMIT NO. 73236 WASHINGTON D. C.

POSTAGE WILL BE PAID BY THE DEPARTMENT OF THE AIR FORCE

HQ AFLC CASO/LODS
Federal Center
Battle Creek, MI 49016

FOLD