Downloaded from http://www.everyspec.com

MIL-S-3905D
19 July 1983
SUPERSEDING
MIL-S-3905C
6 September 1972

MILITARY SPECIFICATION

SLING, PALLET

This specification is approved for use by all Departments and Agencies of the Department of Defense.

1. SCOPE

1.1 Scope. This specification covers wire-rope and steel pipe slings designed to lift loaded pallets.

1.2 Classification. Slings shall be the following types as specified (see 6.2):

Type I	- 2,500 pounds rated capacity.
Type II	- 4,000 pounds rated capacity.
Type III	- 7,500 pounds rated capacity.

2. APPLICABLE DOCUMENTS

2.1 Government documents.

2.1.1 Specifications and standards. Unless otherwise specified, the following specifications and standards of the issue listed in that issue of the Department of Defense Index of Specifications and Standards (DoDISS) specified in the solicitation form a part of this specification to the extent specified herein.

Beneficial comments (recommendations, additions, deletions) and any pertinent data which may be of use in improving this document should be addressed to: USA Mobility Equipment Research and Development Command, ATTN: DRDME-DS, Fort Belvoir, VA 22060 by using the self-addressed Standardization Document Improvement proposal (DD Form 1426) appearing at the end of this document or by letter.

FSC 3940

Downloaded from http://www.everyspec.com

SPECIFICATIONS

FEDERAL

FF-B-575	- Bolts, Hexagon and Square.
FF-C-450	- Clamps, Wire Rope.
FF-T-276	- Thimbles, Rope.
MM-L-736	- Lumber; Hardwood.
QQ-S-781	- Strapping, Steel, and Seals.
RR-C-271	- Chains and Attachments, Welded and Weldless.
RR-W-410	- Wire Rope and Strand.
PPP-B-601	- Boxes, Wood, Cleated-Plywood.
PPP-B-621	- Boxes, Wood, Nailed and Lock-Corner.

MILITARY

MIL-R-17343	- Rope, Nylon.
MIL-G-20241	- Gasket Material, Wood Felt, Impregnated, Adhesive, Pressure-Sensitive.
MIL-P-23377	- Primer Coatings: Epoxy-Polyamide, Chemical and Solvent Resistant.
MIL-F-52553	- Fittings, Wire Rope.
MIL-S-81733	- Sealing and Coating Compound, Corrosion Inhibitive.

STANDARDS

MILITARY

MIL-STD-105	- Sampling Procedures and Tables for Inspection by Attributes.
MIL-STD-129	- Marking for Shipment and Storage.
MIL-STD-130	- Identification Marking and US Military Property.
MIL-STD-889	- Dissimilar Metals.
MIL-STD-1188	- Commercial Packaging of Supplies and Equipment.
MS27183	- Washer, Flat-Round, Steel, Cadmium Plated, General Purpose (In./MM).
MS51967	- Nut, Plain, Hexagon-Carbon Steel, Cadmium Plated, UNC-2B (In./MM).

Downloaded from http://www.everyspec.com

(Copies of specifications and standards required by contractors in connection with specific acquisition functions should be obtained from the contracting activity or as directed by the contracting officer.)

2.2 Other publications. The following document(s) form a part of this specification to the extent specified herein. The issues of the documents which are indicated as DOD adopted shall be the issue listed in the current DODISS and the supplement thereto, if applicable.

AMERICAN NATIONAL STANDARDS INSTITUTE (ANSI)

ANSI/ASTM A 53	- Pipe, Steel, Black and Hot-Dipped, Zinc-Coated Welded and Seamless.
ANSI/ASTM B 633	- Electrodeposited Coatings of Zinc on Iron and Steel.

(Application for copies should be addressed to the American National Standards Institute, 1430 Broadway, New York, NY 10018.)

(Industry association specifications and standards are generally available for reference from libraries. They are also distributed among technical groups and using Federal agencies.)

2.1.3 Order of precedence. In the event of a conflict between the text of this specification and the references cited herein, the text of this specification shall take precedence.

3. REQUIREMENTS

3.1 Description. The slings shall conform to figure 1, 2 or 3, as applicable, and with the requirements specified herein applicable to the type specified.

3.2 First article. When specified (see 6.2), a sample shall be subjected to first article inspection (see 4.3 and 6.3).

3.3 Material. Material shall be as specified herein and as shown in figures 1, 2, 3 and 4. Materials not specified shall be selected by the contractor and shall be subject to all provisions of this specification (see 6.5).

3.3.1 Material deterioration and control. The slings shall be fabricated from compatible materials, inherently corrosion resistant or treated to provide protection against the various forms of corrosion and deterioration that may be encountered in any of the applicable storage and operating environment to which the item may be exposed.

Downloaded from http://www.everyspec.com

3.3.1.1 Dissimilar metals. Dissimilar metals, as defined in MIL-STD-889, shall be electrically insulated from one another to minimize or prevent galvanic corrosion. Insulation may be provided by an insulating barrier such as a coat of epoxy primer conforming to MIL-P-23377, or corrosion inhibiting sealant conforming to MIL-S-81733 or chromate tape conforming to MIL-G-20241. Protection against any galvanic corrosion could also be obtained by exclusion of the electrolyte if feasible.

3.3.1.2 Identification of materials and finishes. The contractor shall identify the specific material, material finish or treatment for use with components and sub-components, and shall make information available, upon request, to the contracting officer or designated representative.

3.3.1.3 Spreader bars. Wood for the spreader bars shall be straight grain hardwood, surfaced four sides (S4S). Wood shall be free from defects other than small surface checks (perceptible openings not more than 4 inches long) slight cross grain (slope of grain not more than 1 inch in a length of 15 inches), and pin knots (not exceeding 1/2 inch diameter). Wood shall be uniformly dried to a moisture content between 12 and 19 percent.

TABLE I. Components and strength requirements for slings types I, II, and III.

Type	Wire rope, dia. (inch)	Construction (IWRC)	Lifting bars (inches) (nominal)	Spreader bars (inches)	Lifting ring (inches)	Size of shackles (inch)	Proof load per leg (lbs)	Sling rated capacity* (lbs)	Net rqd.
I	1/2	6 x 19	1-1/2 x 58	3 x 3 x 58	1-1/8 x 6	3/4	1,250	2,500	yes
II	1/2	6 x 19	1-1/2 x 60	None	1-3/8 x 6	3/4	2,000	4,000	no
III	3/4	6 x 19	1-1/2 x 59	3 x 3 x 60-3/8	1-1/2 x 6	1	3,750	7,500	no

* Rated capacity is the maximum safe working load recommended based on a safety factor of five.

3.4 Construction.

3.4.1 Sling legs. Length of sling legs shall be as shown in figures 1, 2, and 3, as applicable.

Downloaded from http://www.everyspec.com

3.4.2 Net. Each net for type I sling shall consist of seven vertical and six horizontal nylon ropes spaced approximately 8 by 11 inches apart to provide approximately 12 inches of slack in the horizontal dimension. One strand of the horizontal rope shall be passed under one strand of the vertical rope and evenly relayed to form a firm interlocking intersection. This shall be repeated at each intersection. Each horizontal rope shall have a 2-inch-diameter eye splice at each end for looping over the sling legs. The bottom ends of the vertical ropes shall be fastened to the bottom horizontal rope. The vertical rope shall then be relayed, wound once around the bottom horizontal rope and spliced into its own part with not fewer than three full tucks. The top end of each vertical rope shall terminate in a 6-inch-diameter eye splice for looping over the spreader bars (see figure 1).

3.5 Dimensions. Dimensions and tolerances shall be as shown in figures 1, 2, and 3, and as specified herein. Where not specified, tolerances shall conform to commercial practice for this type of equipment.

3.6 Finish. All metal parts that are not zinc coated prior to assembly shall be zinc coated not less than 0.0003 inch. Zinc coating shall be in accordance with ANSI/ASTM B633, type II. Wire rope shall be uncoated (bright). Corrosion-resistant coating shall be done after fabrication.

3.7 Lifting capacities. Each leg of the sling shall withstand the applicable proof load specified in table I without elongation, deformation, rupture or failure of any component, or slippage of any swage sleeve.

3.8 Identification marking. The sling shall be identified in accordance with MIL-STD-130. Figures and letters shall be 1/4 inch high and die-stamped on the outer side of one lifting bar of each sling assembly. The following information shall be included:

Nomenclature	Sling, Pallet
Rated Capacity	_____lbs.
Manufacturer	
U.S.	_____

Downloaded from http://www.everyspec.com

3.9 Workmanship. Workmanship shall assure that components and assembly are free from defects resulting from improper manufacturing or assembly practices which could affect serviceability. Sharp wire rope ends shall not project from swaged sleeves. Metal surfaces shall be free from burrs and sharp edges. Nylon rope splices shall be neatly and tightly made.

4. QUALITY ASSURANCE PROVISIONS

4.1 Responsibility for inspection. Unless otherwise specified in the contract or purchase order, the contractor is responsible for the performance of all inspection requirements as specified herein. Except as otherwise specified in the contract or purchase order, the contractor may use his own or any other facilities suitable for the performance of the inspection requirements specified herein, unless disapproved by the Government. The Government reserves the right to perform any of the inspections set forth in the specification where such inspections are deemed necessary to assure supplies and services conform to prescribed requirements.

4.1.1 Component and material inspection. The contractor is responsible for insuring that components and materials used are manufactured, examined, and tested in accordance with referenced specifications and standards, as applicable.

4.2 Classification of inspections. The inspection requirements specified herein are classified as follows:

a. First article inspection (see 4.3).

b. Quality conformance inspection (see 4.4).

c. Inspection of packaging (see 4.6).

4.3 First article inspection.

4.3.1 Examination. The first article sling shall be examined as specified in 4.5.1. Presence of one or more defects shall be cause for rejection.

4.3.2 Tests. The first article sling shall be tested as specified in 4.5.2. Failure of the test shall be cause for rejection.

4.4 Quality conformance inspection.

4.4.1 Sampling. Sampling for examination and tests shall be in accordance with MIL-STD-105.

Downloaded from http://www.everyspec.com

4.4.2 Examination.

4.4.2.1 Individual. Each sling shall be examined for the critical defects specified in 4.5.1. Presence of one or more critical defects shall be cause for rejection.

4.4.2.2 Samples. Samples selected in accordance with 4.4.1 shall be examined as specified in 4.5.1 for specified major and minor defects. AQL shall be 2.5 percent defective for major defects and 6.5 percent defective for minor defects.

4.4.3 Tests. Samples selected in accordance with 4.4.1 shall be tested as specified in 4.5.2. AQL shall be 2.5 percent defective.

4.5 Inspection procedure.

4.5.1 Examination. The sling shall be examined as specified herein for the following defects:

Critical

1. Cracks and ruptures in swage sleeves.
2. Loose swage sleeves, loose wire rope strands.

Major

101. Materials not as specified.
102. Materials are not corrosion resistant or treated to be made corrosion resistant for the applicable storage and operating environment.
103. Dissimilar metals as defined in MIL-STD-889 are not effectively insulated from each other.
104. Contractor does not have documentation available for identification of material, material finishes or treatments.
105. Components missing or not as specified.
106. Sling construction not as specified.
107. Sling net not as specified.
108. Dimensions not as specified.
109. Finish not as specified.
110. Workmanship not as specified.

Minor

201. Identification marking missing, incorrect, or illegible.

Downloaded from http://www.everyspec.com

4.5.2 Test.

4.5.2.1 Proof load. Each leg of the sling shall be proof tested by having it hoist the proof load specified in table I. The leg of the sling thus loaded shall be raised and lowered five times, holding the load suspended each time for periods of 2 to 5 minutes for a total of 20 minutes. Nonconformance to 3.7 shall constitute failure of this test.

4.6 Inspection of packaging.

4.6.1 Quality conformance inspection of pack.

4.6.1.1 Unit of product. For purposes of inspection, a completed pack prepared for shipment shall be considered a unit of product.

4.6.1.2 Sampling. Sampling for examination shall be in accordance with MIL-STD-105.

4.6.1.3 Examination. Samples selected in accordance with 4.6.1.2 shall be examined for the following defects. AQL shall be 2.5 percent defective.

111. Slings not bundled and secured as specified for level A.
112. Boxes not as specified for level A or B.
113. Quantities packed together exceed limitations of the box for level A or B.
114. Strapping not as specified for level A.
115. Marking missing, illegible, incorrect, or incomplete for level A, B, or commercial.

5. PACKAGING

5.1 General requirements. Each sling shall be collapsed to form a compact bundle of minimum cube and the bundle secured with soft annealed wire.

5.2 Packing. Packing shall be level A, level B, or commercial as specified (see 6.2).

5.2.1 Level A. Slings of like description, secured as specified in 5.1, shall be packed together in a close-fitting box conforming to PPP-B-601, overseas type, style optional, or PPP-B-621, class 2, style optional, in quantities not to exceed the weight limitation of the box. The contents shall be blocked and braced within the box to prevent movement. Box closure and strapping shall be in accordance with the appendix to the applicable box specification. Strapping shall conform to QQ-S-781, class 1, type I or IV, size as applicable. Unless otherwise specified (see 6.2) strapping shall be finish B. When specified (see 6.2) strapping shall be finish A.

Downloaded from http://www.everyspec.com

5.2.2 Level B. Slings of like description, secured as specified in 5.1, shall be packed as specified in 5.2.1 except boxes shall be domestic type or class as applicable. Box closure and strapping shall be in accordance with the appendix to the applicable box specification.

5.2.3 Commercial. The slings, secured as specified in 5.1, shall be packed in accordance with MIL-STD-1188.

5.3 Marking (see 6.4).

5.3.1 Military. Marking for military levels of protection (level A or B) shall be in accordance with MIL-STD-129.

5.3.2 Commercial. Marking for commercial packaging shall be in accordance with MIL-STD-1188.

6. NOTES

6.1 Intended use. The sling is intended for lifting pallets loaded with cargo. The type I sling with net is to prevent shifting of small loads while being lifted (see figure 1).

6.2 Ordering data. Acquisition documents should specify the following:

a. Title, number, and date of this specification.

b. Type of sling required (see 1.2).

c. When a first article is required for inspection and approval and the number of units required (see 3.2).

d. Degree of packing required (see 5.2).

e. When other than finish B strapping is required (see 5.2.1).

6.3 First article. When a first article inspection is required, the item will be tested and should be a preproduction model. The first article should consist of one or more units. The contracting officer should include specific instructions in the acquisition documents regarding arrangements for examinations, test, and approval of the first article.

6.4 Preservation/packing level marking. For purpose of preservation/packing level marking, preservation shall be designated level A.

Downloaded from http://www.everyspec.com

6.5 Recycled material. It is encouraged that recycled material be used, when practical, as long as it meets the requirements of this specification (see 3.3).

Custodians:
Army - ME
Navy - SH
Air Force - 99

Review activities:
Army - AV, MT
Navy - SA
Air Force - 84
DLA - IS

User activity:
Navy - MC

Preparing activity:
Army - ME

Project 3940-0168

Downloaded from http://www.everyspec.com

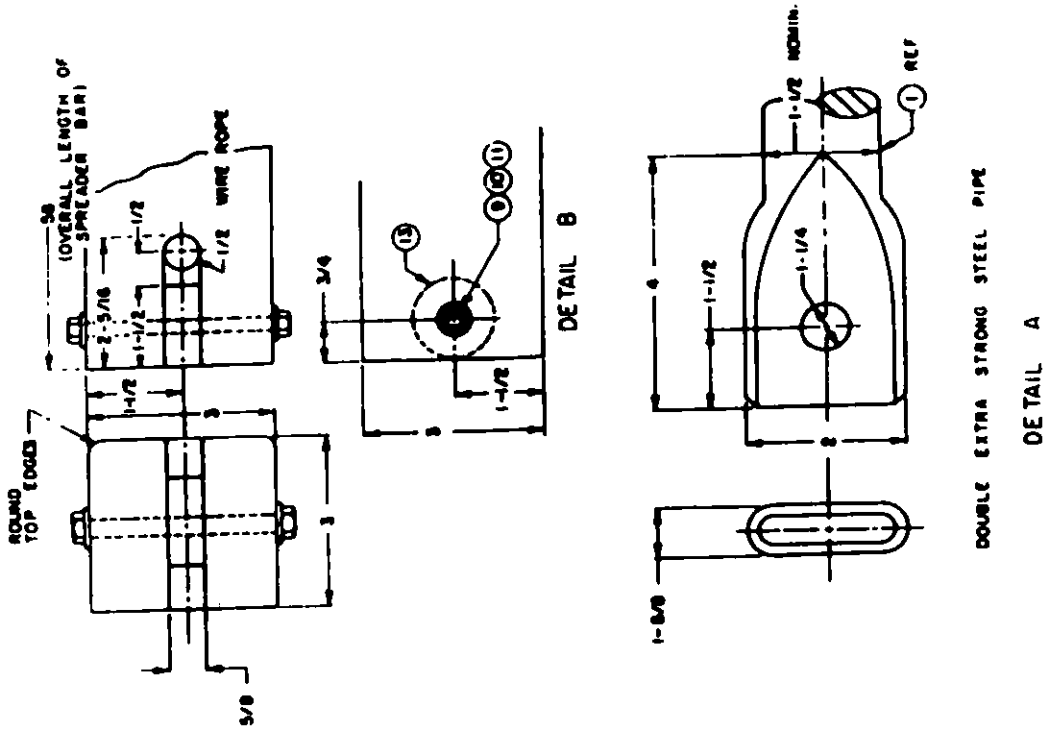

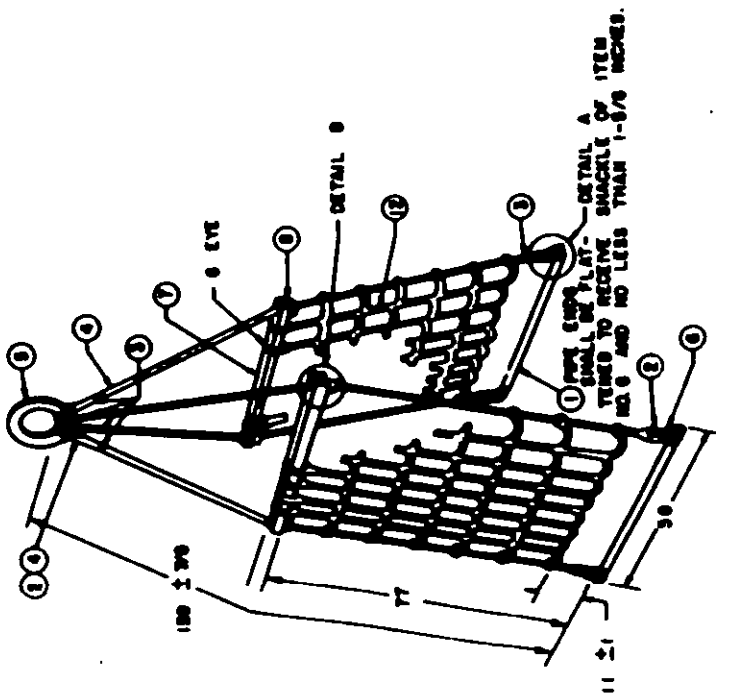

NOTE:
ALL DIMENSIONS ARE IN INCHES.

FIGURE I, Details of type I sling with net.

X-1572C

Downloaded from http://www.everyspec.com

X-1573C

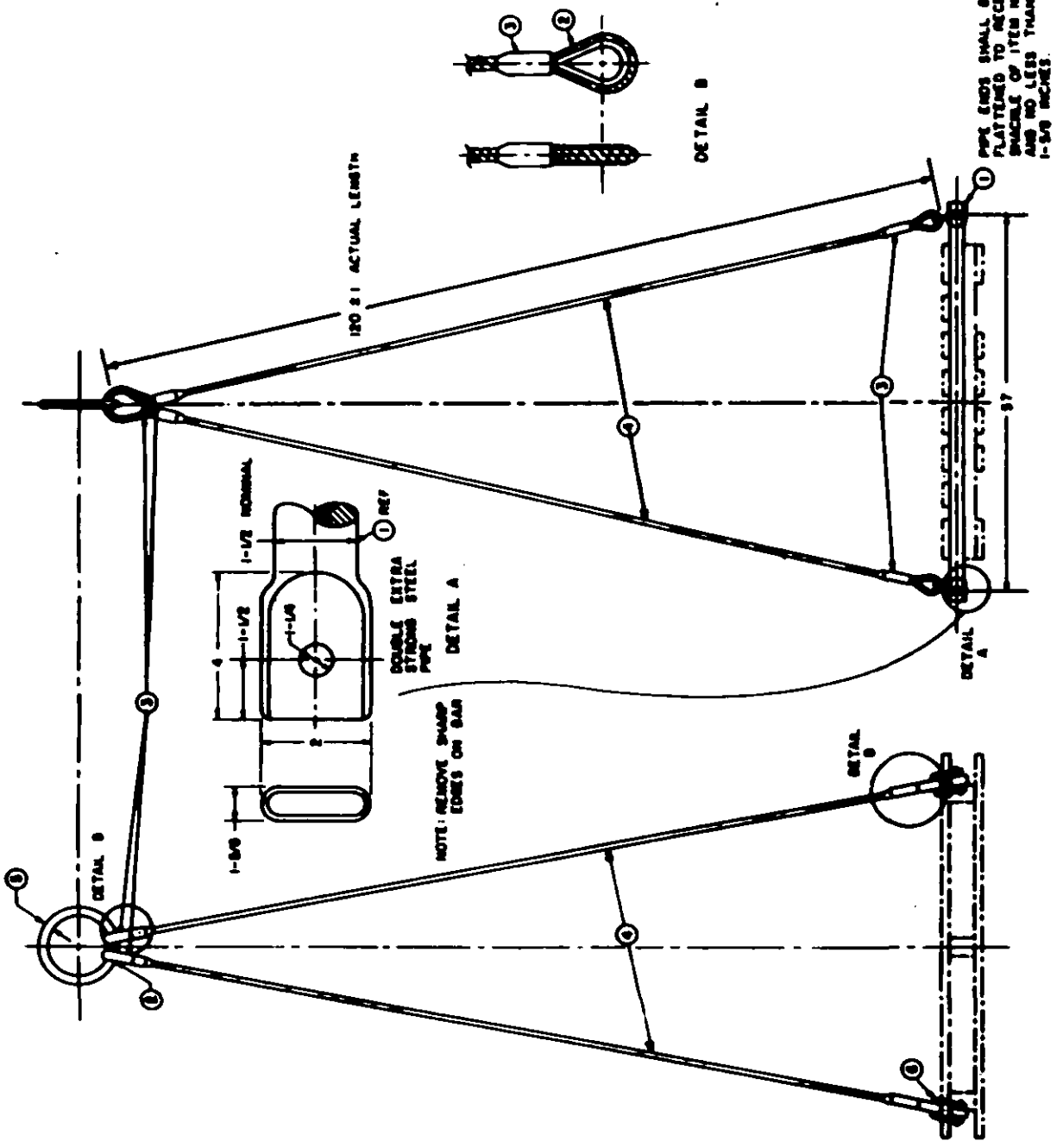

NOTE:
ALL DIMENSIONS ARE IN INCHES.

FIGURE 2. Assembly details of type II sling.

Downloaded from http://www.everyspec.com

X-1574C

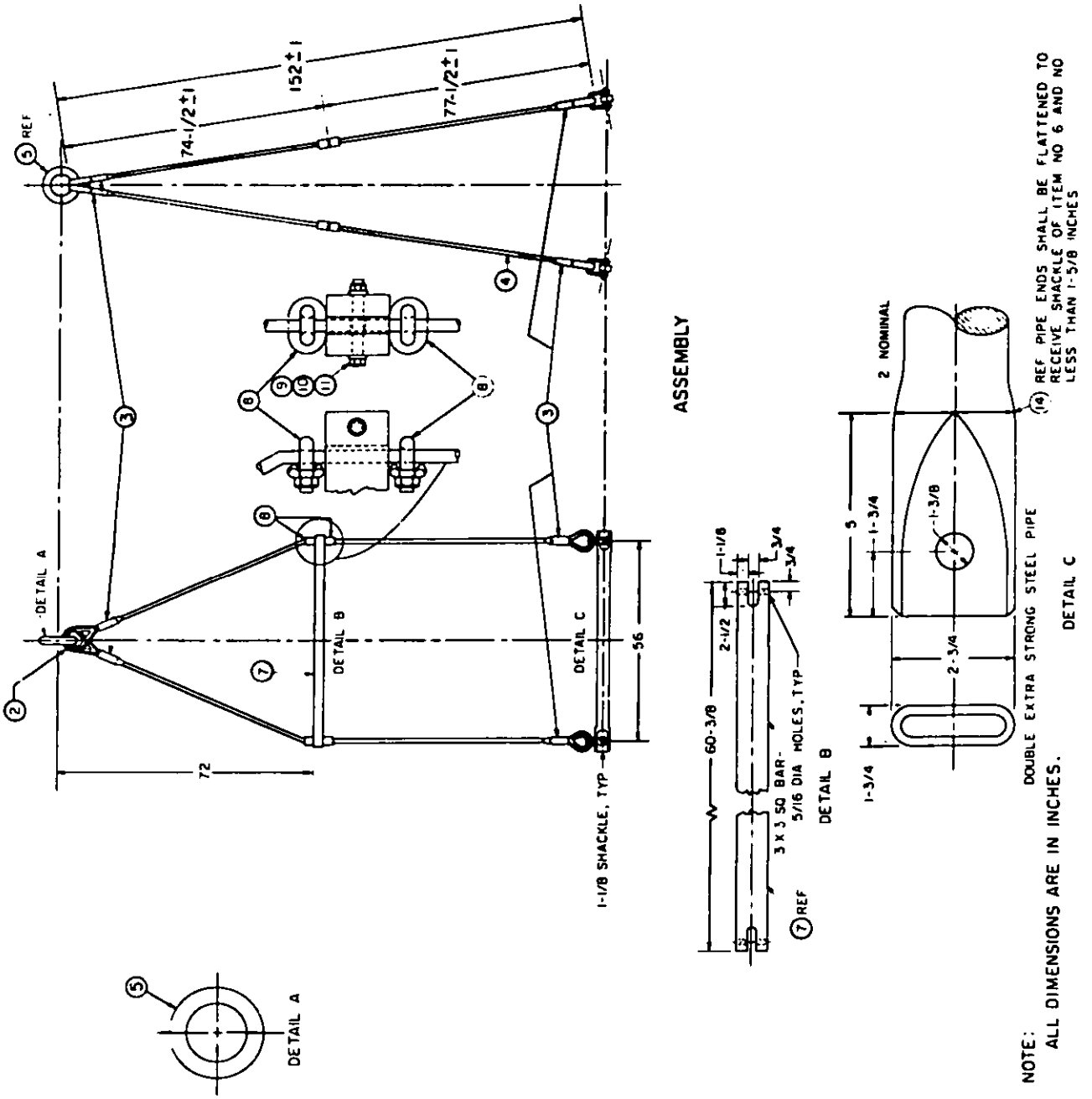

FIGURE 3. Details of type III sling with spreader bars and lifting bars.

ITEM NO.	Fig. 1	Fig. 2	Fig. 3	DESCRIPTION	SPECIFICATION
	Quantity required				
1	2	2	0	Lifting bars - pipe 1-1/2 inch diam., type S, grade A weight class XXS: or type F, weight class XXS	ASTM-A53
2	8	8	8	Thimbles, type III	FF-T-276
3	8	8	8	Swaged sleeves, type I	MIL-F-52553
4	4	4	4	Wire rope, type, I, class 2, 6 x 19, improved plow steel, uncoated (IWRC)	RR-W-410
5	1	1	1	Lifting rings (See table I for size) type VI	RR-C-271
6	4	4	0	Shackles - 1 inch size D - screw pin - type IV - CL. 1	RR-C-271
7	2	0	2	Spreader - wood - 3 x 3 inch x S4S, type II	MM-L-736
8	4	0	8	Wire rope clamp - sgl. grp., type I, CL. 2	FF-C-450
9	4	0	4	Bolts - hex hd. 3-1/2 x 1/4 inch diam. CS - CD - pld., UNC-2A, type 2	FF-B-575
10	4	0	4	Hex nuts - plain - CS - CD - pld. 1/4 inch - UNC-2B	MS-51967
11	4	0	4	Washers - flat - CS - CD - pld. - I.D. 0.281	MS-27183
12	2	0	0	Rope net - nylon - 3/4 inch crcmf.	MIL-R-17343
13	4	0	4	Spacer, aluminum rd. rod, 9/16 x 1-1/2 inch diam.	Commercial
14	0	0	2	Lifting bars - pipe 2 inch diam., type S, grade A, weight class XXS, or type F, weight class XXS	ASTM-A53
15	0	0	4	Shackles - 1-1/8 inch size D - screw pin - type IV - CL. 1	RR-C-271

FIGURE 4. List of materials.

X-2112B

Downloaded from http://www.everyspec.com

Downloaded from http://www.everyspec.com

STANDARDIZATION DOCUMENT IMPROVEMENT PROPOSAL

(See Instructions – Reverse Side)

1. DOCUMENT NUMBER	2. DOCUMENT TITLE
MIL-S-3905D	Sling, Pallet

3a. NAME OF SUBMITTING ORGANIZATION	4. TYPE OF ORGANIZATION *(Mark one)*
	☐ VENDOR
	☐ USER
b. ADDRESS *(Street, City, State, ZIP Code)*	☐ MANUFACTURER
	☐ OTHER *(Specify)*: _____

3. PROBLEM AREAS

a. Paragraph Number and Wording:

b. Recommended Wording:

c. Reason/Rationale for Recommendation:

6. REMARKS

7a. NAME OF SUBMITTER *(Last, First, MI)* – Optional	b. WORK TELEPHONE NUMBER *(Include Area Code)* – Optional
c. MAILING ADDRESS *(Street, City, State, ZIP Code)* – Optional	8. DATE OF SUBMISSION *(YYMMDD)*

DD FORM 82 MAR 1426

PREVIOUS EDITION IS OBSOLETE.

(TO DETACH THIS FORM, CUT ALONG THIS LINE.)