MIL-S-38533A
14 January 1995
SUPERSEDING
MIL-S-38533
4 January 1982

MILITARY SPECIFICATION

SOCKETS, CHIP CARRIER, CERAMIC

GENERAL SPECIFICATION FOR

This specification is approved for use by all Departments and Agencies of the Department of Defense

1. SCOPE

1.1 Scope. This specification covers ceramic chip carrier plug-in sockets for use on panel boards, printed circuit boards, and microelectronic components (see 6.1). For Air Force acquisitions, chip carrier plug-in sockets shall be utilized only in ground benign environments (see 6.4.2)

1.2 Classification. Sockets covered by this specification shall be of the following series, as specified (see 3.1).

1.2.1 Series designator.

Series 1 - Leadless chip carriers.
Series 2 - Leaded chip carriers.

1.2.2 Termination types.

Class 1 - Printed circuit feed thru.
Class 2 - Printed circuit surface mount.

2. APPLICABLE DOCUMENTS

2.1 Government documents

2.1.1 Specifications, standards, and handbooks. Unless otherwise specified, the following specifications, standards, and handbooks of the issue listed in that issue of the Department of Defense Index of Specifications and Standards (DoDISS) specified in the solicitation form a part of this specification to the extent specified herein.

SPECIFICATIONS

FEDERAL

L-P-395	-	Plastic Molding and Extrusion Material Nylon, Glass Fiber Reinforced
QQ-B-750	-	Bronze, Phosphor, Bar, Plate, Rod, Sheet Strip, Flat Wire, and Structural and Special Shaped Sections
QQ-C-530	-	Copper-beryllium Alloy Bar, Rod and Wire (Copper Alloy Numbers 172 and 173).
QQ-C-533	-	Copper-beryllium Alloy Strip (Copper Alloy Numbers 170 and 172)
QQ-N-290	-	Nickel Plating (Electrodeposited)
QQ-W-470A	-	Wire, Music
QQ-Z-363(-3)	-	Zinc, Die Casting
QQ-C-320	-	Chromium Plating (Electrodeposited)

Beneficial comments (recommendations, additions, deletions) and any pertinent data which may be of use in improving this document should be addressed to: Rome Air Development Center (RBE-2), Griffiss AFB, NY 13441, by using the self-addressed Standardization Document Improvement Proposal (DD Form 1426) appearing at the end of this document or by letter

MILITARY

MIL-M-14	-	Molding Plastics and Molded Plastic Parts, Thermosetting.
MIL-P-19468	-	Plastic Rods, Polytetrafluoroethylene, Molded and Extruded.
MIL-M-24519	-	Molding Plastic, Polyester, Thermoplastic.
MIL-S-38533/1	-	Sockets, Chip Carrier, For Use With Chip Carrier, JEDEC, .050 Center, Leadless Types A, B, and D
MIL-G-45204	-	Gold Plating, Electrodeposited
MIL-C-55330	-	Connectors, Preparation for Delivery of.
MIL-T-12879	-	Chromate Treatment, Zinc.
MIL-P-81724	-	Plating, Tin Lead (Electrodeposited)

STANDARDS

MILITARY

MIL-STD-105	-	Sampling Procedures and Tables for Inspection by Attributes.
MIL-STD-202	-	Test Methods for Electronic and Electrical Component Parts.
MIL-STD-810	-	Environmental Test Methods.
MIL-STD-1235	-	Marking of Electrical and Electronic Parts
MIL-STD-1344	-	Test Methods for Electrical Connectors.
MIL-STD-45662	-	Calibration Systems Requirements.

(Copies of specifications, standards, handbooks, drawings, and publications required by manufacturers in connection with specific acquisition functions should be obtained from the contracting activity or as directed by the contracting officer).

2.2 Other publications. The following document forms a part of this specification to the extent specified herein. Unless otherwise indicated, the issue in effect on date of invitation for bids or request for proposal shall apply.

Copper Division Association, Inc. - Copper Alloy No CA725.

(Application for copies should be addressed to the Copper Division Association, Inc., 405 Lexington Avenue, New York, N.Y. 10017).

American Society for Testing and Materials - G21.

2.3 Order of precedence. In the event of a conflict between the text of this specification and the references cited herein, the text of this specification shall take precedence.

3. REQUIREMENTS

3.1 Specification sheets. The individual item requirements shall be as specified herein and in accordance with the applicable specification sheet. In the event of any conflict between requirements of this specification and the specification sheets, the latter shall govern (see 6.1).

3.2 Qualification. Sockets furnished under this specification shall be products which are qualified for listing on the applicable qualified products list at the time set for opening of bids (see 4.5 and 6.3).

3.3 Materials. Materials shall be as specified herein. However, when a definite material is not specified, a material shall be used which will enable the sockets to meet the performance requirements of this specification. Acceptance or approval of any constituent material shall not be construed as a guaranty of the acceptance of the finished product.

3.3.1 Body. Unless otherwise specified (see 3.1), the body shall be a diallyl phthalate in accordance with MIL-M-14, type SDG-F, any glass filled nonflammable thermoplastic material per MIL-M-24519, or polytetrafloroethylene per MIL-P-19468.

3.3.2 Socket contacts (including termination). Unless otherwise specified (see 3.1), the socket contacts, including termination, shall be beryllium copper per QQ-C-530, phosphor bronze per QQ-B-750, copper nickel alloy per CA725, or nickel-silver per CA770, and shall meet the applicable requirements herein and as specified (see 3.1).

3.3.2.1 Contact finish. All contact finishes shall have an underplate of nickel in accordance with QQ-N-290, class 2, .00003 to .00015 inch thick.

NOTE When contacts have been provided in strip form, the absence of plating in the area where the contact was removed from the strip is acceptable provided it is in a nonfunctional area and any corrosion formed as a result of salt spray testing does not creep into the contact mating area.

3.3.2.1.1 Overall finish. All parts of the contact shall be plated in accordance with MIL-G-45204, type II, grade C, class 1.

3.3.2.1.2 Localized finish.

3.3.2.1.2.1 Contact engagement area. The contact engagement area shall be gold in accordance with MIL-G-45204, type II, grade C, class 1.

3.3.2.1.2.2 Solder tail. The solder tail shall be tin-lead in accordance with MIL-P-81728, 50 to 70 percent tin, .0001 inch thick minimum.

3.3.2.1.2.3 Nonfunctional areas. Any portion of the contact other than the contact engagement or termination area shall be in accordance with 3.3.2.1, 3.3.2.1.2.1, or 3.3.2.1.2.2.

3.4 Design and construction (see figure 4). The sockets shall be of the design, construction, and physical dimensions specified (see 3.1) and shall include socket body and retention feature.

3.4.1 Terminations. The form factor and dimensions of the terminals shall be as specified (see 3.1).

3.4.2 Contact identification. Contact identification shall be as specified (see 3.1).

3.4.3 Body design. The body shall be designed and constructed with proper sections and radii so that it will not crack, chip, or break in assembly or in normal service. Depressions, when used to achieve longer creepage paths, shall not cause structural weakness.

3.4.3.1 Retention feature. The retention feature shall provide the force necessary to assure and maintain suitable chip carrier contact engagement without causing damage to the contacts or the chip carrier and shall be assembled without the use of tools.

3.4.4 Polarization. A polarization feature (mechanical or visual) shall be incorporated in each socket to assist correct insertion of chip carrier and assure proper mounting of socket to the board.

3.4.5 Mounting. The sockets shall be mounted as specified (see 3.1).

3.4.6 Mounting standoffs. The socket bodies intended to be soldered to a printed circuit board shall be provided with mounting bosses so that a minimum of 0.012 inch clearance is maintained between the mounting board and the socket body at each terminal location.

3.5 Performance.

3.5.1 Normal force. When tested in accordance with 4.7.2, the normal force shall be 50 grams minimum.

3.5.2 Contact retention. When tested in accordance with 4.7.3, there shall be no unseating or loosening of the contacts.

3.5.3 Insulation resistance. When tested in accordance with 4.7.4, the initial insulation resistance shall be not less than 5,000 megohms.

3.5.4 Dielectric withstanding voltage. When tested in accordance with 4.7.5, there shall be no evidence of breakdown of insulation or flashover.

3.5.5 Capacitance. When tested in accordance with 4.7.6, the capacitance shall not exceed two picofarads.

3.5.6 Terminal strength (bend test). When tested in accordance with 4.7.7, there shall be no evidence of cracking of the terminal or displacement from the socket.

3.5.7 Vibration. When tested in accordance with 4.7.8, there shall be no physical or mechanical damage to the socket body or contacts. During vibration, there shall be no interruption in continuity greater than 1 microsecond of the test circuit which incorporates mated contacts. After the test, the mounting hardware retention feature shall show no signs of loosening, fracture, or other deterioration, and the sockets shall meet the low-signal level contact resistance requirement of 3.5.12.

3.5.8 Shock (specified pulse). When tested in accordance with 4.7.9, there shall be no physical damage to the socket and the retention feature shall not have loosened or been displaced. During the test, there shall be no interruption in continuity greater than 1 microsecond of the test circuit which incorporates mated contacts.

3.5.9 Durability. When tested in accordance with 4.7.10, sockets shall show no evidence of cracking or breaking. The low-signal level contact resistance requirement of 3.5.12 shall not be exceeded.

3.5.10 Temperature cycling. When a socket with a dummy plug-in fixture is tested in accordance with 4.7.11, there shall be no evidence of cracking or crazing of the body or other physical damage to the socket. The chip carrier and the retention feature shall be capable of mating and unmating with the socket body without damage to any of the components.

3.5.11 Moisture resistance. When tested in accordance with 4.7.12, insulation resistance shall be not less than 300 megohms.

3.5.12 Low-signal level contact resistance. When tested in accordance with 4.7.13, there shall be no evidence of electrical discontinuity and the contact resistance shall not exceed 20 milliohms. After corrosive atmospheric and durability tests, the contact resistance shall not exceed the initial value by more than 10 milliohms.

3.5.13 Corrosive atmosphere. When tested in accordance with 4.7.14, the low-signal level contact resistance requirement of 3.5.12 shall not be exceeded.

3.5.14 Solderability. Terminations shall withstand the test specified in 4.7.15.

3.5.15 Resistance to soldering heat. The sockets shall withstand the test specified in 4.7.16.

3.5.16 Fungus. All material shall be listed in MIL-STD-454, requirement 4, group I, or the material shall be tested as specified in 4.7.17. There shall be no visible growth of fungus after testing.

3.5.17 Retention cover. When the retention cover is tested in accordance with 4.7.14, there shall not be sufficient corrosion to interfere with its mating or unmating to the socket body (with chip carrier) or to cause exposure of the base metal.

3.5.18 Solder wicking. When the sockets are tested as specified by 4.7.18, there shall be no solder entry up the terminal to the point of entering the socket insulator.

3.6 Marking. The sockets shall be marked in accordance with method I of MIL-STD-1285, and shall include the military part number (see 3.1), the manufacturer's name or code symbol, and date code.

3.7 Workmanship. Unless otherwise specified (see 3.1), sockets shall be processed in such a manner as to be uniform in quality and shall be free from burrs, crazing, cracks, voids, pimples, chips, blisters, pin holes, sharp cutting edges, and other defects that will adversely affect life, serviceability, or appearance.

4. QUALITY ASSURANCE PROVISIONS

4.1 Responsibility for inspection. Unless otherwise specified in the acquisition document, the contractor is responsible for the performance of all inspection requirements as specified herein. Except as otherwise specified in the acquisition document, the contractor may use his own or any other facilities suitable for the performance of the inspection requirements specified herein, unless disapproved by the Government. The Government reserves the right to perform any of the inspections set forth in the specification where such inspections are deemed necessary to assure that supplies and services conform to prescribed requirements.

4.1.1 Test equipment and inspection facilities. Test and measuring equipment and inspection facilities of sufficient accuracy, quality, and quantity to permit performance of the required inspection shall be established and maintained by the contractor. The establishment and maintenance of a calibration system to control the accuracy of the measuring and test equipment shall be in accordance with MIL-STD-45662.

4.2 Classification of inspections. The inspections specified herein are classified as follows

a. Materials inspection (see 4.3)
b. Qualification inspection (see 4.5).
c. Quality conformance inspection (see 4.6).

4.3 Materials inspection. Materials inspection shall consist of certification supported by verifying data that the materials, as specified herein and on the specification sheet (see 3.1), used in fabricating the sockets, are in accordance with the applicable referenced specifications or requirements prior to such fabrication.

4.4 Inspection conditions. Unless otherwise specified herein, all inspections shall be performed in accordance with the test conditions specified in the "GENERAL REQUIREMENTS" of MIL-STD-1344.

4.5 Qualification inspection. Qualification inspection shall be performed at a laboratory acceptable to the Government (see 6.3) on sample units produced with equipment and procedures normally used in production.

4.5.1 Sample size.

4.5.1.1 Single submission. Ten sockets shall be subjected to qualification inspection.

4.5.1.2 Group submission. To qualify sockets, ten samples shall be selected from the specification sheet listing the largest number of contacts and shall qualify sockets listed on other specification sheets having the same design, construction, and materials. Two samples of each part number having a lesser number of contacts shall be submitted to the test requirements of group I and the low-signal level contact resistance and the test gage normal force of group II of table I.

TABLE I. Qualification inspection.

Inspection	Requirement paragraph	Method paragraph
Group I (10 sample units)		
Visual and mechanical inspection 2/	3.1, 3.3, 3.4, 3.6 and 3.7	4.7.1
Contact retention 1/	3.5.2	4.7.3
Insulation resistance (all sockets)	3.5.3	4.7.4
Dielectric withstanding voltage (all sockets)	3.5.4	4.7.5
Capacitance 1/ 2/	3.5.5	4.7.6
Group II (2 sample units) 4/		
Low-signal level contact resistance 1/	3.5.12	4.7.13
Normal force 1/	3.5.1	4.7.2
Vibration 3/	3.5.7	4.7.8
Shock 3/	3.5.8	4.7.9
Low-signal level contact resistance 1/	3.5.12	4.7.13
Normal force 1/	3.5.1	4.7.2
Insulating resistance (all sockets)	3.5.3	4.7.4
Visual inspection (all sockets)	3.6	
Group III (2 sample units) 4/		
Low-signal level contact resistance 1/	3.5.12	4.7.13
Temperature cycling (all sockets)	3.5.10	4.7.11
Low-signal level contact resistance 1/	3.5.12	4.7.13
Normal force 1/	3.5.1	4.7.2
Moisture resistance (all sockets)	3.5.11	4.7.12
Low-signal level contact resistance 1/	3.5.12	4.7.13
Insulation resistance (all sockets)	3.5.3	4.7.4
Dielectric withstanding voltage (all sockets)	3.5.4	4.7.5
Visual inspection (all sockets)	3.6	
Group IV (2 sample units) 5/		
Low-signal level contact resistance 1/	3.5.12	4.7.13
Durability (all sockets)	3.5.9	4.7.10
Low-signal level contact resistance 1/	3.5.12	4.7.13
Corrosive atmosphere (all sockets)	3.5.13	4.7.14
Low-signal level contact resistance 1/	3.5.12	4.7.13
Retention cover (all sockets)	3.5.17	4.7.14
Visual inspection (all sockets)	3.6	
Group V (2 sample units)		
Terminal strength (bend test) 1/	3.5.6	4.7.7
Solderability 1/	3.5.14	4.7.15
Visual inspection (all sockets)	3.6	
Group VI (2 sample units) 4/		
Resistance to solder heat (all sockets)	3.5.15	4.7.16
Normal force 1	3.5.1	4.7.2
Dielectric withstanding voltage (all sockets)	3.5.4	4.7.5
Visual inspection (all sockets)	3.6	

1/ A minimum of 10 percent of the contacts but not less than 2 contacts per quadrant shall be tested.
2/ Three samples only.
3/ All contacts except those wired for low-signal level contact resistance.
4/ Sockets shall be mounted on a printed wire board.
5/ Mounting of sockets to printed wire board is optional.

4.5.2 Inspection routine The sample shall be subjected to the inspections specified in table I in the order shown. All sample units shall be subjected to the inspections of group I. The sample shall be divided into five groups of two units each and subjected to the inspections for their particular group.

4.5.3 Failures. One or more failures shall be cause for refusal to grant qualification approval.

4.5.4 Retention of qualification To retain qualification, the contractor shall forward to the qualifying activity at 12-month intervals a summary of groups A and B. At 36-month intervals, a group C report shall be submitted. The qualifying activity shall establish the initial reporting date. The report shall consist of

a. A summary of the results of the tests performed for inspection of product for delivery, groups A and B, indicating as a minimum the number of lots that have passed and the number that have failed. The results of tests of all reworked lots shall be identified and accounted for.

b. The results of tests performed for periodic inspection, group C, including the number and mode of failures. The test report shall include results of all periodic inspection tests performed and completed during the 36-month period. If the test results indicate nonconformance with specification requirements, and corrective action acceptable to the qualifying activity has not been taken, action may be taken to remove the failing product from the qualified products list. When a group C report is submitted the group A and group B summary is not required.

Failure to submit either report within 60 days after the end of each 36-month period may result in loss of qualification for the product. In addition to the periodic submission of inspection data, the contractor shall immediately notify the qualifying activity at any time during the 36-month period that the inspection data indicates failure of the qualified product to meet the requirements of this specification (see 4.6.2.1).

In the event that no production occurred during the reporting period, a report shall be submitted certifying that the company still has the capabilities and facilities necessary to produce the item. If during two consecutive reporting periods there has been no production, the manufacturer may be required, at the discretion of the qualifying activity, to submit a representative product of each part number to testing in accordance with the qualification inspection requirements

4.6 Quality conformance inspection.

4.6.1 Inspection of product for delivery. Inspection of product for delivery shall consist of group A inspection.

4.6.1.1 Inspection lot. An inspection lot shall consist of all sockets of the same configuration (other than number of pins), produced under essentially the same conditions, and offered for inspection at one time.

4.6.1.2 Group A inspection. Group A inspection shall consist of the inspections specified in table II, in the order shown.

4.6.1.2.1 Sampling plan. Statistical sampling and inspection shall be in accordance with MIL-STD-105, level S-4. The acceptable quality level (AQL), shall be as specified in table II. Major and minor defects shall be as defined in MIL-STD-105.

4.6.1.2.2 Rejected lots. If an inspection lot is rejected, the contractor may rework it to correct the defects, or screen out the defective units, and resubmit for reinspection. Resubmitted lots shall be inspected using tightened inspection. Such lots shall be separate from new lots, and shall be clearly identified as reinspected lots

TABLE II. Group A inspection.

Inspection	Requirement paragraph	Test method paragraph	AQL (percent defective)	
			Major	Minor
Visual and mechanical inspection	3.1, 3.3, 3.4 3.6 and 3.7	4 7.1	1.0	2.5

4.6.2 Group B inspection. Group B inspection shall consist of the inspections specified in table III, in the order shown. Group B inspection shall be made on sample units which have been subjected to and have passed the group A inspection.

TABLE III. Group B inspection

Inspection	Requirement paragraph	Method paragraph
Normal force 1/	3.5.1	4.7.2
Solderability 1/	3.5.14	4.7.15

1/ A minimum of 10 percent of the contacts but not less than 2 contacts per quadrant shall be tested.

4.6.2.1 Periodic inspection. Periodic inspection shall consist of group C inspection. Except where the results of this inspection show noncompliance with the, applicable requirements (4.6.2.1.4), delivery of products which have passed group A and group B inspections shall not be delayed pending the results of these periodic inspections.

4.6.2.1.1 Sampling plan. Ten sample sockets from those covered by a single specification sheet (see 3.1) shall be selected at random from items produced every 36 months (see 4.5.2).

4.6.2.1.2 Failures. If any sample units fail to pass group B insoection, the entire sample shall be considered to have failed.

4.6.2.1.3 Disposition of sample units. Sample units which have been subjected to group B inspection shall not be delivered on the contract.

4.6.2.1.4 Noncompliance. If a sample fails to pass group C inspection, the manufacturer shall notify the qualifying activity and the cognizant inspection activity of such failure and take corrective action on the materials or processes, or both, as warranted, and on all units of product which can be corrected and which were manufactured under essentially the same materials and processes, and which are considered subject to the same failure. Acceptance and shipment of the product shall be discontinued until corrective action that is acceptable to the qualifying activity has been taken. After the corrective action has been taken, group B inspection shall be repeated on additional sample units (all inspections, or the inspection which the original sample failed, at the option of the qualifying activity). Group A inspection may be reinstituted, however, final acceptance and shipment shall be withheld until the group B inspection has shown that the corrective action was successful. In the event of failure after reinspection, information concerning the failure shall be furnished to the cognizant inspection activity and the qualifying activity.

4.6.3 Packaging inspection. The sampling and inspection of the preservation-packaging, packing, and container marking shall be in accordance witn the requirements of MIL-C-55330.

4.7 Methods of inspection.

4.7.1 Visual and mechanical inspection. The sockets shall be examined to verify at the dimensions, materials, design, construction, marking, and workmanship are in accordance with the applicable requirements (see 3.1, 3.3, 3.4, 3.6, and 3.7).

4.7.2 Normal force (see 3.5.1). The following procedure shall be used to determine the contact deflection for measuring normal force.

a. An unloaded socket shall be placed on the reference plane (see figure 1A) and the distance to the top of the unloaded contact shall be measured.

b. The socket shall be loaded with a chip carrier of minimum thickness and the latching mechanism engaged (see figure 1B). The distance from the reference plane to the loaded contact (dimension C) shall be determined by subtracting the chip carrier dimension from dimension B.

c. The amount of the contact deflection is determined by subtracting C from A.

4.7.2.1 Measurement. The normal force shall be the amount of force required to deflect the contact the distance determined in 4.7.2 (see figure 1C).

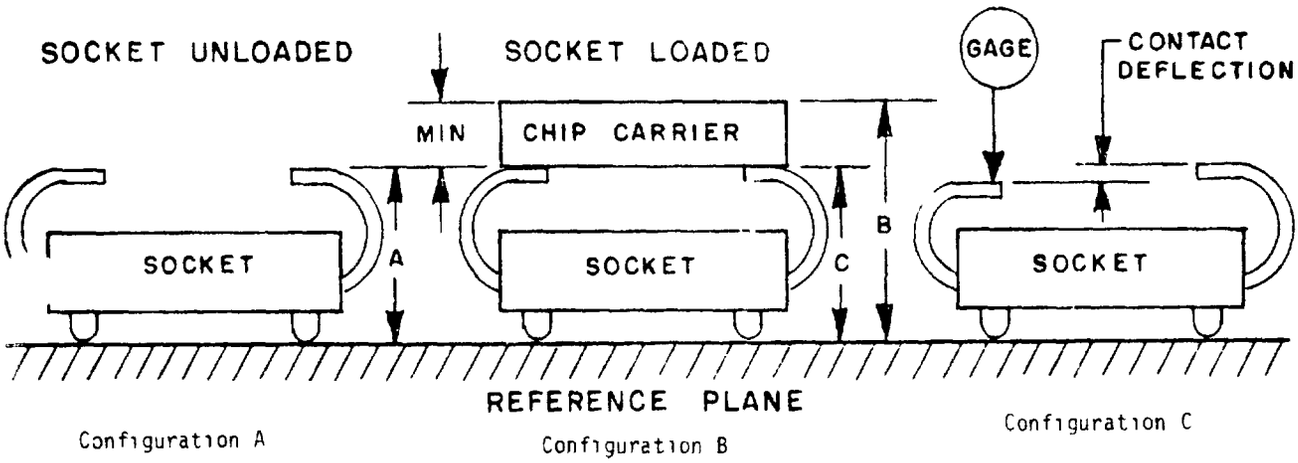

FIGURE 1. Chip carrier sockets.

4.7.3 Contact retention (see 3.5.2). A one-half pound axial load shall be applied by pushing against the termination end of the contact. A minimum of 10 percent of the contacts but not less than 2 contacts per quadrant shall be tested.

4.7.4 Insulation resistance (see 3.5.3). Unmated sockets shall be tested in accordance with method 3003 of MIL-STD-1344. Insulation resistance shall be measured at 100 volts.

4.7.5 Dielectric withstanding voltage (see 3.5.4). Sockets shall be tested in accordance with method 3001 of MIL-STD-1344. The following details and exceptions shall apply

a. Socket shall be unloaded.

b. Magnitude of test voltage 600 volts.

c. Nature of potential AC (rms).

d. Points of application of test voltage Between adjacent pins and between metal components and nearest pin

4.7.6 Capacitance (see 3.5.5). The socket shall be tested in accordance with method 305 of MIL-STD-202. The following details shall apply

a. Test frequency: 1 kilohertz.

b. Polarization Not applicable.

c. Unmounted

d. Capacitance shall be measured between adjacent pins.

e. Number of readings: See footnote 1/ of table I.

4.7.7 Terminal strength (bend test) (see 3.5.6). The terminals shall be tested in accordance with method 211 of MIL-STD-202, test B They shall be tested one complete cycle and bent 30 degrees.

4.7.8 Vibration (see 3.5.7) The sockets shall be tested in accordance with method 2005 of MIL-STD-1344. The following details shall apply

a. Test condition III.

b. Preparation Mated with a dummy ceramic chip carrier. See figure 3 for further detail.

c. At the conclusion of this test, the low-signal level contact resistance shall be measured in accordance with 4.7.13 All contacts used for measuring low-signal level contact resistance shall be excluded from the series circuit used for monitoring contact interruption

d. The socket shall be mounted to a printed-wiring board.

4.7.9 Shock (specified pulse) (see 3.5.8) The socket shall be tested in accordance with method 2004 of MIL-STD-1344. The following details shall apply

a. Mounting method and accessories Mounted by soldering to test circuit board with dummy ceramic chip carrier installed which shall series contacts.

b. Acceleration requirements Test condition G.

c. Number of blows One blow in both directions along each of three mutually perpendicular axes for a total of six shocks Monitor circuit for open of greater than one microsecond

d. Preparation Mated with a dummy ceramic chip carrier. See figure 4 for test setup.

e. Exclusion All contacts used for measuring low-signal level contact resistance shall be excluded from the series circuit of 4.7.9a above used for monitoring circuit interruption.

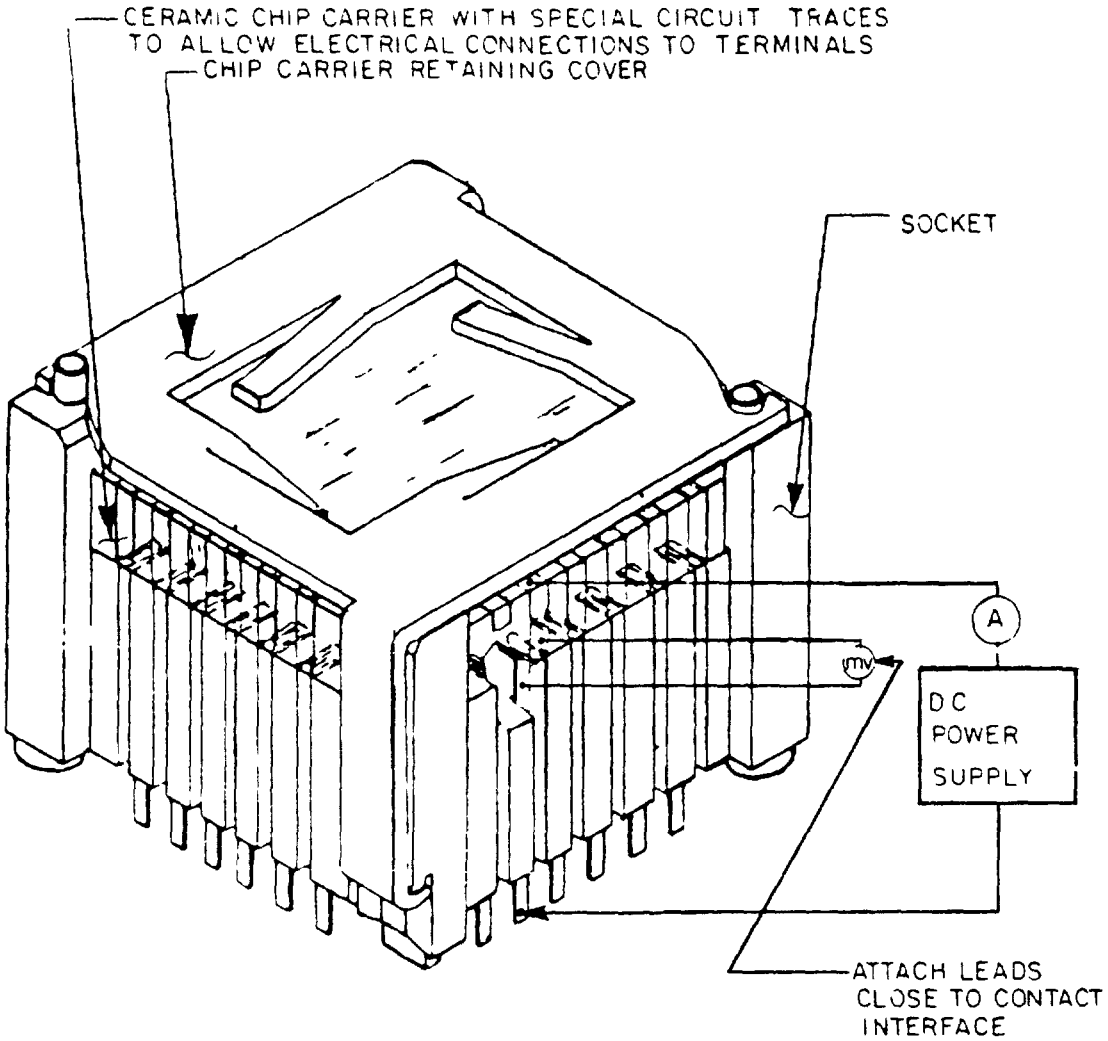

NOTES:

1. The measured resistance in this example includes a portion of both the terminal and test socket leads as well as the voltmeter test leads. These resistances are to be subtracted from the total resistance to obtain the contact resistance.
2. A shorting wire may be soldered between leads in lieu of use of a special shorting plug.

FIGURE 2 Typical low-signal level contact resistance test setup

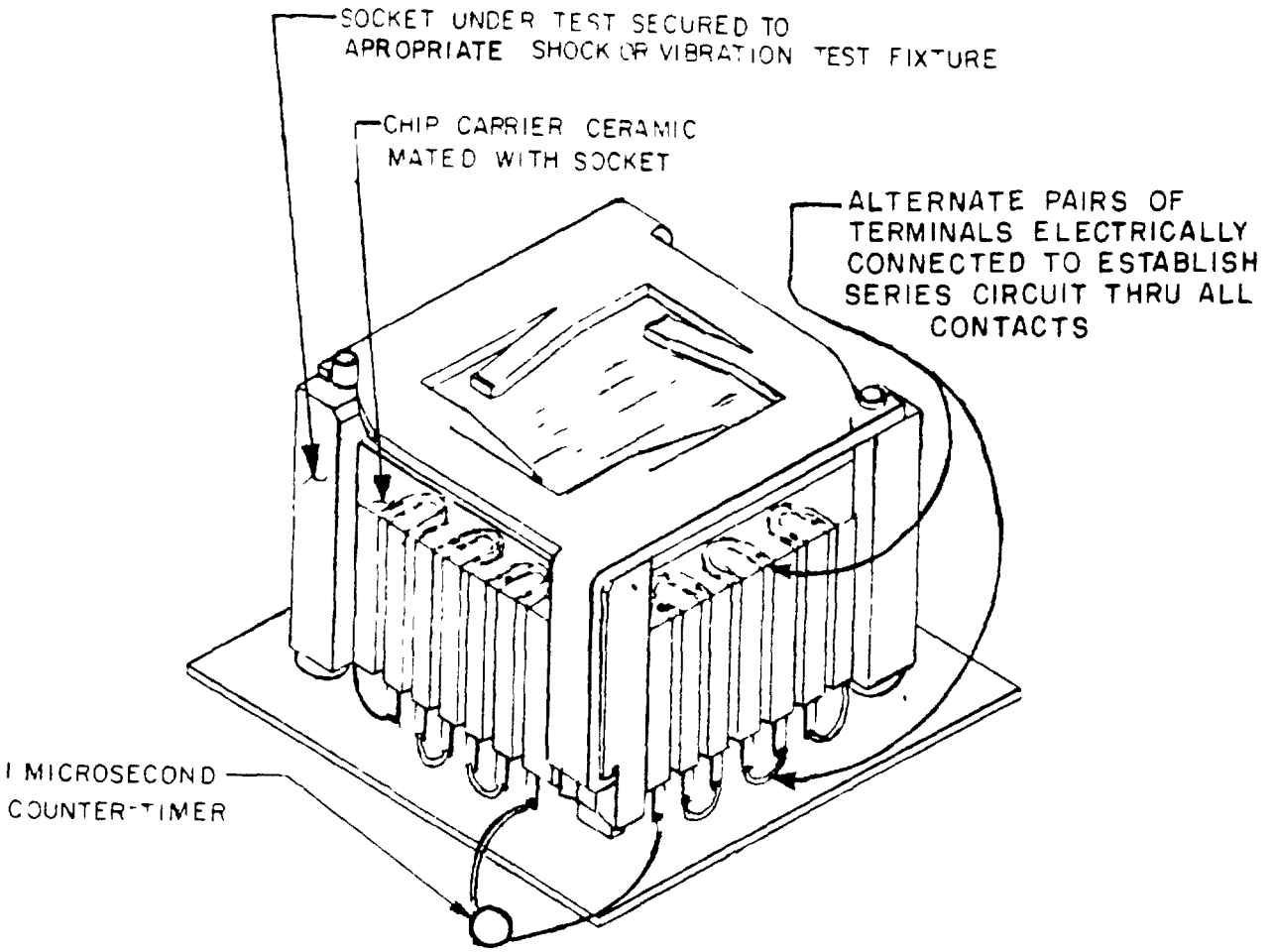

FIGURE 3. Vibration and mechanical shock test setup.

4.7.10 Durability (see 3.5.9). Each unit shall be subjected to 50 mating and unmating cycles using a steel gauge made to the maximum thickness chip carrier with 8 microinches maximum finish on the mating surface

4.7.11 Temperature cycling (see 3.5 10). The sockets shall be tested in accordance with method 1003 of MIL-STD-1344. The socket shall be tested using a dummy ceramic chip carrier and the retention feature The following details shall apply

a. Test condition A, except high temperature shall be 120°C.

b. Test measurement The sockets shall be capable of mating at the temperature extremes (forces shall be unmonitored) during the fifth cycle, without damage to the retention feature, ceramic chip carrier, or socket body.

4 7.12 Moisture resistance (see 3 5 11) The sockets shall be tested in accordance with method 1002 of MIL-STD-1344 type II Unmounted sockets shall be connected as specified in 4.7.5. Insulation resistance shall be measured in accordance with 4 7 4 upon completion of step 5 of final cycle.

4.7.13 Low-signal level contact resistance (see 3.5.12). The low-signal level contact resistance test procedure shall be in accordance with method 3002 of MIL-STD-1344. The following details shall apply.

a. Environmental conditioning not required.

b. A minimum of eight contacts (two per quadrant) shall be measured, using a ceramic chip carrier with terminations matching the contacts to be measured.

4.7.14 Corrosive atmosphere (see 3.5.13). Mated sockets (retention feature, dummy, ceramic chip carrier socket body) shall be exposed to a concentrated sulphur atmosphere. The following details shall apply:

a. Sockets which have been preconditioned by being subjected to two unmonitored insertions of the mating force test gauge (see figure 2) shall be mated with a dummy plug-in fixture and then exposed to a 10-25 ppm solution of ammonimum polysulfide at a relative humidity of 60 percent or higher at room temperature four hours in an enclosed chamber.

b. At the conclusion of the sulphur atmosphere exposure, the low-signal level contact resistance of the undisturbed mated socket shall be measured in accordance with 4.7.15.

4.7.15 Solderability (see 3.5.14). A minimum of 20 percent of the terminals shall be subjected to method 208 of MIL-STD-202. Sockets shall be immersed to the bottom of the standoff.

4.7.16 Resistance to soldering heat (see 3.5.15). The sockets shall be tested in accordance with method 210 of MIL-STD-202, test condition B. The sockets shall be mounted on a glass epoxy wiring board.

4.7.17 Fungus (see 3.5.16). Material shall be tested in accordance with ASTM 621. There shall be no evidence of fungus growth on the external surfaces. Before and after the test, capacitance shall meet the requirement of 3.5.17.

4.7.18 Solder wicking (see 3.5.18). The sockets shall be tested in accordance with method 2019 of MIL-STD-1344.

5. PACKAGING

5.1 Packaging requirements. The requirements for packaging shall be in accordance with MIL-C-55330.

6. NOTES

6.1 Intended use. The sockets covered by this specification are intended for use on a printed circuit board and terminals may be soldered to the printed circuit board unless otherwise noted in the specification sheets (see 3.1). Only sockets and integrated circuits with similar contact finish shall be mated.

6.2 Ordering data. Acquisition documents should specify the following

a. Title, number, and date of this specification.

b. Title, number, and date of the applicable specification sheet, and the complete part number (see 3.1).

6.3 Qualification. With respect to products requiring qualification, awards will be made only for products which are, at the time set for opening of bids, qualified for inclusion in the applicable qualified products list, whether or not such products have actually been so listed by that date. The attention of the contractors is called to this requirement, and manufacturers are urged to arrange to have products that they propose to offer to the Federal Government tested for qualification in order that they may be eligible to be awarded contracts or orders for the products covered by this specification. The activity responsible for the qualified products list is Rome Air Development Center (RBE-2), Griffiss AFB, NY 13441 however, information pertaining to qualification of products may be obtained from the Defense Electronics Supply Center (DESC-E), Engineering Standardization Directorate, Dayton, OH 45444.

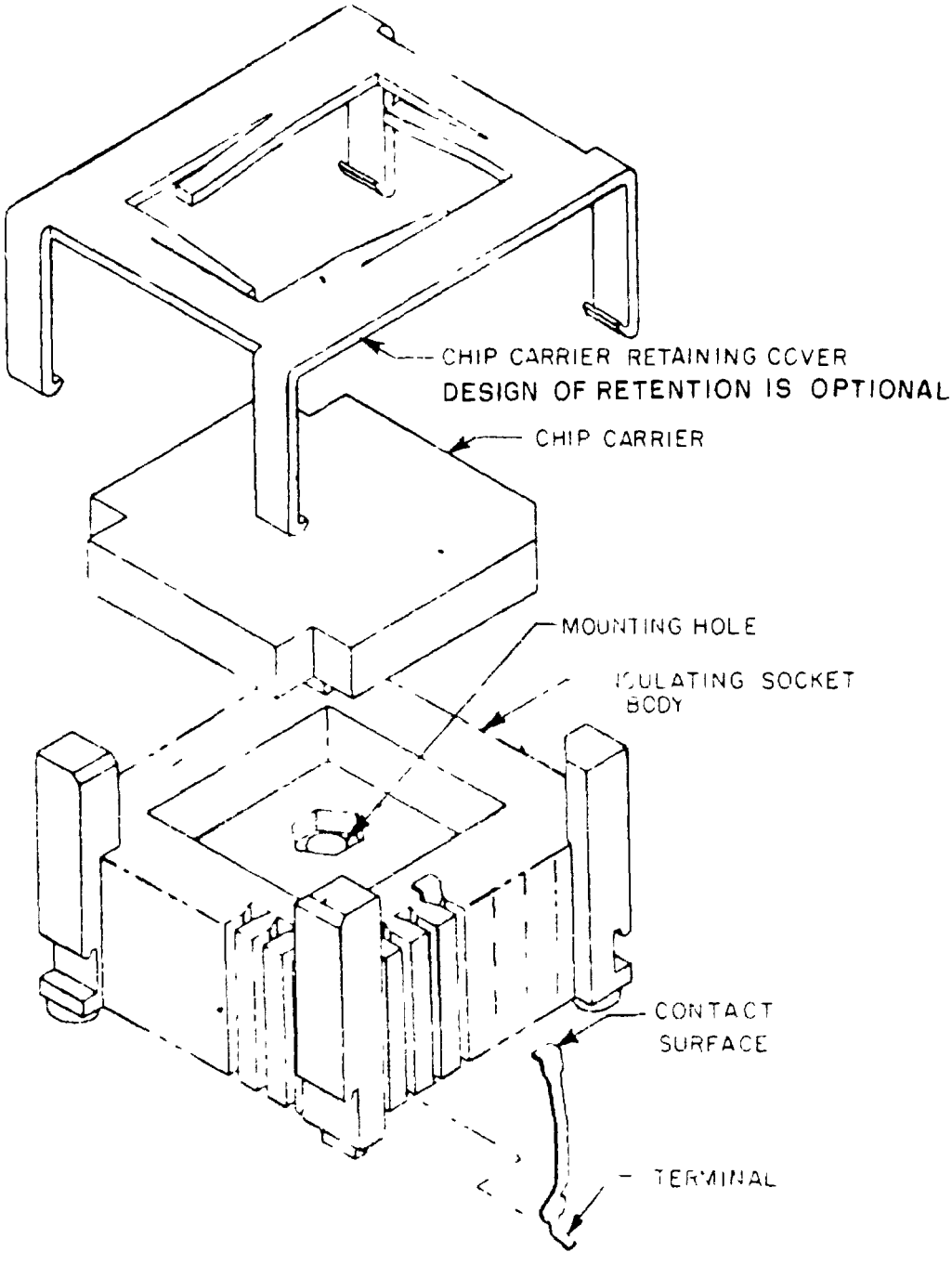

FIGURE 4 General configuration (surface mount, leadless chip carrier).

6.4 Definitions.

6.4.1 Corrosive atmosphere. The corrosive atmosphere test is intended to reveal imperfections in the plated contacting surfaces such as pores, scratches, or incomplete plating coverage. It will also reveal defects such as low contact pressure. However, it is not intended to correlate directly with long term atmospheric contamination.

6.4.2 Ground benign environment. A ground benign environment is a nonmobile environment readily accessible to maintance (i.e. laboratory instruments, test equipment, medical electronic equipment, business, and scientific computer complexes).

Custodians
Army - CR
Navy - EC
Air Force - 17

Review activities
Army - AR, MI
Navy - AS
Air Force - 11, 85, 99
DLA - ES

User activities.
Army - AT, AV, ME
Navy - AS, MC, SH
Air Force - 19

Agent
DLA - ES

Preparing activity
Air Force - 17

(Project 5935-3421)

INSTRUCTIONS In a continuing effort to make our standardization documents better, the DoD provides this form for use in submitting comments and suggestions for improvements All users of military standardization documents are invited to provide suggestions This form may be detached, folded along the lines indicated, taped along the loose edge *(DO NOT STAPLE)* and mailed In block 5, be as specific as possible about particular problem areas such as wording which required interpretation, was too rigid, restrictive, loose, ambiguous, or was incompatible, and give proposed wording changes which would alleviate the problems Enter in block 6 any remarks not related to a specific paragraph of the document If block 7 is filled out an acknowledgement will be mailed to you within 30 days to let you know that your comments were received and are being considered

NOTE This form may not be used to request copies of documents nor to request waivers, deviations, or clarification of specification requirements on current contracts Comments submitted on this form do not constitute or imply authorization to waive any portion of the referenced document(s) or to amend contractual requirements

(Fold along this line)

DEPARTMENT OF THE AIR FORCE

Rome Air Development Center
Griffiss AFB, NY 13441

OFFICIAL BUSINESS
PENALTY FOR PRIVATE USE $300

NO POSTAGE NECESSARY IF MAILED IN THE UNITED STATES

BUSINESS REPLY MAIL
FIRST CLASS PERMIT NO 12216 WASHINGTON D C

POSTAGE WILL BE PAID BY THE DEPARTMENT OF THE AIR FORCE

(TO DETACH THIS FORM CUT ALONG THIS LINE)

STANDARDIZATION DOCUMENT IMPROVEMENT PROPOSAL

(See Instructions - Reverse Side)

1 DOCUMENT NUMBER	2 DOCUMENT TITLE
MIL-S-38533A	Sockets, Chip Carrier, Ceramic General Specification For

3a NAME OF SUBMITTING ORGANIZATION	4 TYPE OF ORGANIZATION *(Mark one)*
	☐ VENDOR
b ADDRESS *(Street City State ZIP Code)*	☐ USER
	☐ MANUFACTURER
	☐ OTHER *(Specify)* _____

5 PROBLEM AREAS

a Paragraph Number and Wording

b Recommended Wording

c Reason Rationale for Recommendation

6 REMARKS

7a NAME OF SUBMITTER *(Last First MI)* – Optional	b WORK TELEPHONE NUMBER *(Include Area Code)* – Optional
c MAILING ADDRESS *(Street, City State ZIP Code)* – Optional	8 DATE OF SUBMISSION *(YYMMDD)*

DD FORM 82 MAR 1426 PREVIOUS EDITION IS OBSOLETE