|INCH POUND|
MIL-S-29594(AS)
17 July 1992

MILITARY SPECIFICATION

SPECTACLES, AVIATOR'S, SEVEN WAVELENGTH LASER EYE PROTECTIVE

This specification is approved for use by the Naval Air Systems Command, Department of the Navy, and is available for use by all Departments and Agencies of the Department of Defense.

1. SCOPE

1.1 Scope. This specification covers the requirements for one type of aviator's spectacles, with carrying case, designated EDU-6/P, which provide protection against seven fixed laser wavelengths and have prescription capability (see 6.2d and 6.21). It shall be compatible with the Chemical Biological Radiological (CBR) Protective Assembly. It may be used by all fixed and rotary wing aircrew.

2. APPLICABLE DOCUMENTS

2.1 Government documents.

2.1.1 Specifications, standards and handbooks. The following specifications, standards and handbooks form a part of this specification to the extent specified herein. Unless otherwise specified, the issues of these documents are those listed in the issue of the Department of Defense Index of Specifications and Standards (DODISS) and supplement thereto, cited in the solicitation (see 6.2c).

SPECIFICATIONS

FEDERAL

PPP-B-636 - Boxes, Shipping, Fiberboard

Beneficial comments (recommendations, additions, deletions) and any pertinent data which may be of use in improving this document should be addressed to: Commanding Officer, Naval Air Warfare Center Aircraft Division Lakehurst, Systems Requirements Department Code SR3, Lakehurst, NJ 08733-5100 by using the self-addressed Standardization Document Improvement Proposal (DD Form 1426) appearing at the end of this document or by letter.

AMSC N/A FSC 8465

MILITARY

MIL-C-83409	-	Coatings, Visor, Polycarbonate, Flying Helmet
MIL-E-12397	-	Eraser, Rubber-pumice (For Testing Coated Optical Elements).

STANDARDS

FEDERAL

FED-STD-595	-	Colors

MILITARY

DOD-STD-100	-	Engineering Drawing Practices
MIL-STD-105	-	Sampling Procedures and Tables for Inspection by Attributes
MIL-STD-129	-	Marking for Shipment and Storage.
MIL-STD-130	-	Identification Marking of U.S. Military Property
MIL-STD-662	-	Ballistic Test For Armor
MIL-STD-810	-	Environmental Test Methods and Engineering Guides

(Unless otherwise indicated, copies of federal and military specifications, standards and handbooks are available from the Standardization Documents Order Desk, Building 4D, 700 Robbins Avenue, Philadelphia, PA 19111-5094).

2.1.2 Other Government documents, drawings, and publications. The following other Government documents, drawings and publications form a part of this specification to the extent specified herein. Unless otherwise specified, the issues are those cited in the solicitation.

DRAWINGS

U.S. ARMY ARMAMENT RESEARCH, DEVELOPMENT and ENVIRONMENTAL CENTER

7680606	-	Tester, Abrasion, Optical Coating.

U.S. POSTAL SERVICE

Laws and Regulations

(Application for copies should be addressed to the Superintendent of Documents, Government Printing Officer, Washington, DC, 20402.)

MANUALS

NAVAL AIR SYSTEMS COMMAND

NAVAIR 13-1-6.7 - Aviation Crew Systems - Aircrew Personal Protective Equipment

(Application for copies should be as directed by the contracting activity or as directed by the contracting officer.)

2.2 Non-Government publications. The following documents form a part of this specification to the extent specified herein. Unless otherwise specified, the issues of the documents which are indicated as DoD adopted are those listed in the issue of the DoDISS cited in the solicitation. Unless otherwise specified, issues of documents not listed in the DoDISS are the issues of the documents cited in the solicitation (6.2c).

AMERICAN SOCIETY FOR TESTING AND MATERIALS (ASTM)

ASTM D1003 - Standard Test Methods for Haze and Luminous Transmittance of Plastics

ASTM D1044 - Standard Test Method for Resistance of Transparent Plastics to Surface Abrasion.

ASTM D3935-87 - Standard Specification for Polycarbonate (PC) Unfilled and Reinforced Material

(Application for copies should be addressed to the American Society for Testing and Materials, 1916 Race Street, Philadelphia, PA 19103-1137)

NATIONAL MOTOR FREIGHT TRAFFIC ASSOCIATION, INC., AGENT

National Motor Freight Classification

(Application for copies should be addressed to the Uniform Classification Committee, Room 1106, 222 South Riverside Plaza, Chicago, IL 60606.)

(Non-Government standards and other publications are normally available from the organizations that prepare or distribute the documents. These documents also may be available in or through libraries or other informational services.)

2.3 Order of precedence. In the event of a conflict between the text of this document and the references cited herein, (except for related associated detail specifications, specification sheets, or military standards) the text of this document shall take precedence. Nothing in this document, however, supersedes applicable laws and regulations unless a specific exemption has been obtained.

3. REQUIREMENTS

3.1 Qualification. Spectacles furnished under this specification shall be products which are authorized by the qualifying activity for listing on the applicable qualified products list at the time of contract award (see 4.3.2 and 6.4). In addition, the retention of the qualification for the spectacles on the applicable qualified products list shall be dependent on periodic verification of continued compliance with the requirements of this specification (see 4.3 and 4.3.2).

3.2 First article. When specified, (see 6.2f) samples shall be subjected to first article inspection (see 6.5) in accordance with 4.4.

3.3 Materials. Materials shall conform to applicable procurement documents, specifications and drawings and as specified herein. Materials which are not covered by these documents or are not specifically described herein, shall be of the best quality, of the lightest practical weight and suitable for the purpose intended.

3.3.1 Lens material. The plastic material used for the spectacle lenses shall be in accordance with ASTM D3935-87.

3.4 Design and construction. The design and construction of the spectacles and carrying case shall be in accordance with applicable procurement documents, specifications and drawings, and as specified herein. The spectacles shall afford protection for aircrew against seven fixed laser wavelengths over the entire surface of the lenses. It shall be possible for a prescription to be incorporated into the lens and the contractor shall be responsible for producing the prescription lenses. Incorporation of a prescription shall not compromise any of the performance requirements in this specification. The front and back surfaces of the lenses shall have a scratch resistant coating in accordance with MIL-C-83409. The lenses shall be compatible with cockpit phosphors and lighting. The lenses shall be installed into five frame sizes of the AR-S spectacle frame model 9013 (see 6.6), or equivalent, as follows:

P/N - 50 X 24 X 85
P/N - 50 X 24 X 90
P/N - 50 X 24 X 95
P/N - 50 X 24 X 100
P/N - 50 X 24 X 105

3.5 Interchangeability. All parts having the same manufacturer's part number shall be functionally and dimensionally interchangeable. This statement does not apply to the lenses and the temple piece which contains the identifying information. They shall not be replaced as this would negate the control of the item. The drawing number requirements of DOD-STD-100 shall govern changes in the manufacturer's part numbers.

3.6 Performance.

3.6.1 Visual examination. When visually examined as specified in 4.8.1 the spectacles shall conform to the requirements of this specification. Table IV, Classification of Defects for Visual and Dimensional Examination, shall be used to classify and enumerate the defects.

3.6.2 Matching. Right and left optical centers when tested as specified in 4.8.2. shall match in location and in sign, prism and power to the requirements of 3.6.3.1, 3.6.3.2 and 3.6.4. Prescription lenses shall be as prescribed.

3.6.3 Prismatic Deviations.

3.6.3.1 Vertical prismatic deviation. Prismatic power when measured at the optical center for the right eye and the optical center for the left eye as specified in 4.8.3.1, shall not: a. Differ by more than .00 diopters for prism

of opposite base (i.e., base up - base down = .00), b. Differ by more than .125 diopters for prism of the same base (i.e. base up - base up = .125, or base down - base down = .125), or c. Exceed a total of .20 prism diopters for prism of the same base (i.e., base up + base up = .20, or base down + base down = .20).

3.6.3.2 Horizontal prismatic deviation. The algebraic sum of horizontally oriented prism when measured at the optical center for the right eye and the optical center for the left eye as specified in 4.8.3.2 shall not: a. Exceed .20 diopters for prism of opposite base (i.e., base out + base in = .20), b. Exceed .20 diopters for base out prism (i.e., base out + base out = .20), or c. Exceed .125 diopters for base in prism (i.e., base in + base in = .125). The overall difference in prism between right and left optical centers irrespective of base shall not exceed .125 diopters.

3.6.4 Spherical and cylindrical power. The spherical and cylindrical power, when measured as specified in 4.8.4 shall not exceed plus or minus 0.125 diopters or differ in sign at the optical center of the left and right lenses (i.e. positive power at the optical center of one lens and negative power at the optical center of the other lens).

3.6.5 Critical vision area distortion. The distortion within the critical vision area when examined as specified in 4.8.5 shall be within the acceptable limits shown in Figure 1.

3.6.6 Lens fit. There shall be no evidence of visible space between the lens and frame when inspected as specified in 4.8.6.

3.6.7 Curvature. The dioptric value of the outside surface of the plano lenses shall be +6, ± 1/4 diopters when the dioptric value is calculated on the basis of an index of refraction of 1.530 when tested as specified in 4.8.7 The comparable value of prescription lenses shall be as prescribed.

3.6.8 Transmittance requirements.

3.6.8.1 Optical density. The spectacles shall protect the human eye against seven fixed wavelengths of laser radiation when tested as specified in 4.8.8.1. The spectacles shall have the required optical density for the specified threat wavelengths (see 6.2d) regardless of the radiation angle of incidence.

3.6.8.2 Luminous transmittance. When tested as specified in 4.8.8.2 the photopic transmittance shall be 11.0 percent (%) or greater and the scotopic transmittance shall be 2.0 % or greater. At the optical center for the right eye and at the optical center for the left eye of the same spectacles, these transmittances (i.e. left photopic vs. right photopic and left scotopic vs. right scotopic) shall not differ by more than 10 % of the higher of the two values.

EXAMPLE OF PASSING SAMPLE:
Right eye photopic = 11.2 %
Left eye photopic = 11.5 %

11.5 x .10 = 1.15
11.5 - 11.2 = 0.3 (within the allowable difference of 1.15)

EXAMPLE OF FAILING SAMPLE:
Right eye photopic = 11.4 %
Left eye photopic = 12.9 %

12.9 x .10 = 1.29
12.9 - 11.4 = 1.5 (outside the allowable difference of 1.29)

3.6.8.3 Erythemal ultraviolet transmittance. The erythemal ultraviolet transmittance of the spectacles, when computed as specified in 4.8.8.3 shall not exceed 0.2 percent.

3.6.8.4 Haze. The haze value of the spectacles shall not exceed 2.0 percent when determined as specified in 4.8.8.4.

3.6.8.5 Abrasion resistance. After being subjected to the abrasion test specified in 4.8.8.5, haze shall not exceed 6 % and transmittance shall not decrease by more than 4 percentage points. For example, an initial value of 20 percent transmittance shall not decrease to less than 16 %.

3.6.9 Radiation induced damage resistance. When tested as specified in 4.8.9, transitory or permanent radiation-induced changes in the density or transmittance of the spectacles shall not occur at levels typical of levels to which aircrew may be exposed during operation. This shall include sunlight (4.8.9.1) and laser radiation (4.8.9.2).

3.6.10 Adhesion of coating. The coating, when tested as specified in 4.8.10 shall not be removed, dislodged, or affected in any way. Removal or loosening of the coating shall be cause for rejection.

3.6.11 Ballistic resistance. When tested as specified in 4.8.11, there shall be no penetration, spall or cracks in the spectacle lenses.

3.6.12 Carrying case. A carrying case shall be provided with each pair of spectacles. The case shall have a snap closure and shall approximately match color number 30450 (black) of FED-STD-595.

3.6.12.1 Crush resistance of carrying case. The carrying case shall have a case insert designed to prevent damage to the spectacles. The carrying case when tested as specified in 4.8.12 shall be capable of withstanding the test without damage to the spectacles within the case.

3.6.12.2 Case covering. The case covering shall be flexible with a snap closure. The inside of the case shall have a smooth surface.

3.6.13 Identification of product. Each pair of spectacles shall be identified in accordance with MIL-STD-130. The identification shall be on the inside of the right temple piece. It shall indicate 7 wavelength laser eye protection and the lot and serial numbers of each particular pair of spectacles. Each pair of spectacles shall be identified and controlled from the time of final assembly until disposal. The identification shall not cause the spectacles to be classified.

3.6.14 Caution notice. The following notice shall be printed on white paper in accordance with MIL-STD-130 and placed in the carrying case with each pair of spectacles.

CAUTION NOTICE: These spectacles are a hazard/threat countermeasure device. They are designed to protect your eyes from the harmful effects of exposure to seven discrete laser wavelengths. You can obtain the classified wavelength and optical density information from: Commanding Officer, Naval Air Warfare Center Aircraft Division Warminster, ATTN: Vision Laboratory (6023), Warminster, PA 18974-5000 .

In order to provide the desired protection, the spectacles must be cared for properly. To clean remove dust and dirt with a lint free soft cloth, soft paper tissues or cotton balls. Clean with a mild detergent and water and blow dry or dry by using the soft cloth or tissues. Deep scratches may reduce the protection. This may be checked by running a fingernail over the scratch. If the finger-nail catches the scratch, the spectacles should not be worn and should be disposed of. EACH PAIR OF SPECTACLES IS A CONTROLLED ITEM AND SHOULD BE DISPOSED OF IN ACCORDANCE WITH NAVAIR MANUAL 13-1-6.7.

These spectacles shall be worn only during daylight hours. They do not transmit enough light to be worn during the low light levels of dawn, dusk or at night.

These spectacles are not intended as a replacement for sunglasses. Do not use these spectacles with magnifying optics (binoculars, telescopes, etc.).

DO NOT USE FOR PROTECTION AGAINST LASERS OTHER THAN THE INTENDED SEVEN WAVELENGTHS!

3.6.15 Workmanship. All spectacles shall be constructed to produce an item free from all defects which would affect proper functioning in service. The spectacles shall conform to the quality and grade of product established by this specification. The occurrence of defects shall not exceed the acceptance criteria established in Table III.

4. QUALITY ASSURANCE PROVISIONS

4.1 Responsibility for inspection. Unless otherwise specified in the contract or purchase order, the contractor is responsible for the performance of all inspection requirements (examinations and tests) as specified herein. Except as otherwise specified in the contract or purchase order, the contractor may use his own or any other facilities suitable for the performance of the inspection requirements specified herein, unless disapproved by the Government. The Government reserves the right to perform any of the inspections set forth in this specification where such inspections are deemed necessary to ensure supplies and services conform to prescribed requirements.

4.1.1 Responsibility for compliance. All items shall meet all requirements of sections 3 and 5. The inspection set forth in this specification shall become a part of the contractor's overall inspection system or quality program. The absence of any inspection requirements in the specification shall not relieve the contractor of the responsibility of ensuring that all products or supplies submitted to the Government for acceptance comply with all requirements of the contract. Sampling inspection, as part of manufacturing operations, is an acceptable practice to ascertain conformance to requirements, however, this does not authorize submission of known defective material, either indicated or actual, nor does it commit the Government to accept defective material.

4.2 Classification of inspection. The inspections specified herein are classified as follows:

a. Qualification inspection (see 4.3)
b. First article inspection (see 4.4)
c. Quality conformance inspection (see 4.5)
d. Quality conformance verification inspection (see 4.6)

4.3 Qualification inspection. Qualification inspection shall consist of the examinations and tests specified in Table I.

4.3.1 Qualification samples. Qualification samples shall consist of nine spectacles with carrying case of the type [designator no. to go here when known] for which qualification testing has been authorized. One of these samples shall demonstrate the manufacturers capability of incorporating a prescription in the lens (see 6.21). Samples shall be forwarded to the test facility designated in the letter of authorization to submit samples (see 6.4). The samples shall be plainly identified by securely attached durable tags marked with the following information:

Samples submitted by (name) (date) for qualification inspection in accordance with the requirements of MIL-S-29594(AS) under authorization (reference authorizing letter) and qualification test number assigned (see 6.4).

4.3.2 Retention of Qualified Products Listing (QPL). The retention of qualification listings shall consist of verification every two years to determine compliance of the listed item with the requirements of this specification. Verification shall be by manufacturer's certification unless otherwise specified by the activity responsible for the QPL.

4.4 First article inspection. First article inspection shall consist of all the examinations and tests specified in Table II.

4.4.1 First article samples. Unless otherwise specified, as soon as practical after award of the contract or order, the manufacturer shall submit eight pairs of spectacles (see 6.2h). The samples shall be representative of the construction, workmanship, components, and materials to be used during production. When a manufacturer is in continuous production of these units from contract to contract, submission of further first article samples on the new contract may be waived at the discretion of the acquiring activity (6.2f). Approval of the first article inspection sample or waiving of the first article inspection does not preclude the requirements for performing the quality conformance inspection. The first article inspection samples shall be furnished to the Government as directed by the contracting officer (6.2h).

4.4.1.1 First article information. Upon completion of the first article inspection program, recommendations and comments pertinent to the program will be forwarded by the Government activity responsible for the first article inspection (6.2h) to the Contracting Officer. One approved pair of spectacles shall be returned to the manufacturer for use in monitoring production. The remaining samples will be consumed or destroyed in the first article inspection and shall not be considered as part of the quantity to be delivered under contract.

4.4.1.2 Certification of compliance. When specified (6.2i), components and materials of the spectacles may be accepted on the basis of the contractor's certification of compliance with the requirements of this specification. The certification shall be accompanied with test, inspection or other verifiable data. The Government reserves the right to verify the validity of the certification.

4.5 Quality conformance inspection. Quality conformance inspection shall consist of the examinations and tests specified in Table III. The sampling and inspection levels shall conform to MIL-STD-105.

4.5.1 Sampling.

4.5.1.1 Inspection lot.

4.5.1.1.1 Spectacles. A spectacle inspection lot size shall be expressed in units of one pair of spectacles of the same type (part number) made under the same conditions and from the same materials and components. The sample unit shall be one pair of spectacles.

4.5.1.1.2 Packaging. A packaging inspection lot size shall be expressed in units of one fully prepared shipping container containing spectacles fully prepared for delivery, made from the same materials and components. The sample unit shall be one shipping container, containing spectacles fully prepared for delivery with the exception it need not be sealed.

4.5.1.2 Sampling for tests and examinations of spectacles. The sample size, acceptance criteria, tests, and examinations required for the spectacles shall be as specified in Table III.

4.6 Quality conformance verification inspection at an inspection facility. Upon completion of the tests and examinations in 4.5.1.2, a random sample shall be selected from each lot in accordance with MIL-STD-105, Inspection Level S-3. The sample size shall be based only on the applicable sample size code letter corresponding to the Inspection Level S-3. Each pair of spectacles selected as a sample unit shall be identified as assigned (see 3.5), and shall be forwarded to the Government laboratory specified in the acquisition document (see 6.2.h), for the following tests and examinations (listed sequence mandatory):

REQUIREMENTS AND EXAMINATIONS

Visual and dimensional examination	3.6.1 and 4.8.1.1 & 4.8.1.2
Optical density	3.6.8.1 and 4.8.8.1
Luminous transmittance	3.6.8.2 and 4.8.8.2
Erythemal ultraviolet transmittance	3.6.8.3 and 4.8.8.3
Haze	3.6.8.4 and 4.8.8.4

The number of sample units selected from the lot shall be furnished to the Government laboratory. Sample units form a rejected lot shall not be resubmitted for tests and examinations without the approval of the contracting officer. Upon completion of the testing, the sample units will be returned to the contractor at the contractor's expense. The Government activity responsible for conducting the inspection program (see 6.2h) shall report the results of the tests and examinations to the designated inspection and acceptance office specified in the

acquisition document. Final acceptance shall be based upon successful completion of the inspection program by the cognizant Gorvernment quality assurance representative/specialist; applying the applicable acceptance criteria specified in Table III.

4.7. Test conditions.

4.7.1 Cleanliness. Before and after subjecting the spectacles to any test, the lenses shall be thoroughly and carefully cleaned to remove dirt, oil, fingermarks, etc., to assure that the following tests are performed on clean lenses.

4.8 Inspection methods.

4.8.1 Visual examination.

4.8.1.1 Spectacles. Every pair of spectacles shall be visually examined to determine conformance to the requirements of this specification. The classification of defects in Table IV shall be used to classify the defect found.

4.8.1.2 Dimensions check. Every pair of spectacles shall be dimensionally checked to conform with the requirements of 3.6.1.

4.8.1.3 Packaging. Each of the fully prepared shipping containers, containing spectacles, selected as a sample unit from the lot, shall be examined to determine that the packaging, packing and markings conform to Section 5 and Table V of this specification.

4.8.2 Matching. Matching of the right and left spectacle lenses within the frame, for location of the visual center, sign, prism and power shall be determined with a telescope, vertometer, lensometer, projection lantern or any other suitable instrument. The instrument shall include a target which can be brought into sharp focus, as observed through an eyepiece or projected on a screen and an aperture not over 1 centimeter in diameter fixed at a definite position along the axis of the optical system. The design of the system shall be such that refractive power in the principle meridian of the lens placed across the test aperture can be determined to within .06 diopter. The spectacles shall pass the matching requirements specified in 3.6.2. Prescription lenses shall meet the required prescription.

4.8.3 Prismatic deviation. Testing spectacles for sign, prism and power shall be determined at the visual center with a suitable instrument as described in 4.8.2. The spectacles shall pass the requirements specified in 3.6.3.

4.8.3.1 Vertical prismatic deviation. The spectacles shall be tested for vertical prismatic deviation using the test method described in 4.8.2. Base up prism shall be designated positive (+) and base down prism shall be designated negative (-). The vertical prismatic deviation shall be calculated by determining the algebraic sum and difference between the amount of prism of the right lens and of the left lens and shall pass the requirements specified in 3.6.3.1.

4.8.3.2 Horizontal prismatic deviation. The spectacles shall be tested for horizontal prismatic deviation using the test method described in 4.8.2. Base out prismatic deviation shall be designated positive (+) and base in prismatic deviation shall be designated negative (-). The horizontal prismatic deviation

shall be calculated by determining the algebraic sum and difference between the amount of prism at the visual center of the right lens and the amount of prism at the visual center of the left lens and shall pass the requirements specified in 3.6.3.2.

4.8.4 Spherical and cylindrical power. The spectacles shall be tested for spherical and cylindrical power using the method described in 4.8.2. and shall pass the requirements specified in 3.6.4.

4.8.5 Critical vision area distortion. With the spectacles inserted into the apparatus described in Figure 2 and its surface normal to the line of sight, examine for distortion. The degree of off-parallelism will constitute the amount of distortion and this distortion pattern shall be compared with Figure 1. The spectacles shall meet the requirements specified in 3.6.5.

4.8.6 Lens fit. The contact area between the frame and lens of the spectacles shall be inspected with a strong, neutral, non-glaring light behind the spectacles. Any visible light between the frame and lens indicates a space exists between the frame and lens. The spectacles shall pass the requirements specified in 3.6.6.

4.8.7 Curvature. The outside curvature of the spectacle lens shall be measured by a Geneva lens measure or equivalent. Three measurements shall be made on each lens to the nearest 0.125 diopter. The lens outside curvature shall pass the requirements specified in 3.6.7.

4.8.8 Transmittance requirements.

4.8.8.1 Optical density. The optical densities shall be measured at the specified threat wavelengths. The measurements shall be made with a spectrophotometer, a photometer or lasers of the appropriate wavelengths (the preferred method) or any equivalent method. The densities shall pass the requirements specified in 3.6.8.1.

4.8.8.2 Luminous transmittance. The photopic and scotopic luminous transmittance of the spectacles shall be computed as shown in Table VI or equivalent method. The spectacles shall pass the requirements specified in 3.6.8.2.

4.8.8.3 Erythemal ultraviolet transmittance. The erythemal ultraviolet transmittance of the spectacles shall be computed by averaging the transmittances at wavelengths of 290, 300, 310 and 320 nm. The spectacles shall pass the requirements specified in 3.6.8.3.

4.8.8.4 Haze. The haze shall be determined in accordance with Procedure A of ASTM D1003. The spectacles shall pass the requirements specified in 3.6.8.4.

4.8.8.5 Abrasion resistance. The luminous transmittance and haze shall be determined before and after the abrasion test as specified in Procedure A of ASTM D1003 or equivalent method (4.8.8.2 and 4.8.8.4). The surface abrasion test shall be performed as specified in ASTM D1044 or by an equivalent method. An equivalent method of abrading the surface shall utilize a specially standardized eraser and mount as illustrated in Figure 3. The eraser shall be held approximately normal to the surface and rubbed across the surface of the coated lens from one point to another, over the same path, for 20 complete cycles with a force of 2.0 to 2.5

pounds continuously applied. Wherever possible, rubs of about 1 inch length are preferred. After the rubbing has been completed, the lens shall be thoroughly cleaned to remove dirt, film, fingermarks and grease marks using a mild detergent and water followed by drying with a soft cloth or lens tissue. The lens shall pass the requirements as specified in 3.6.8.5.

4.8.9 Radiation induced damage resistance. These tests shall consist of a solar radiation test (4.8.9.1) to determine the effects of exposure to sunlight and laser saturation tests (4.8.9.2) to determine the effects of laser exposures at the wavelengths at which the protection is required.

4.8.9.1 Solar radiation. The spectacles shall be placed into the Kratos Model SS 2500 Solar Simulator test chamber or the equivalent. The sequence of exposure shall consist of 8 hours of irradiation followed by 16 hours of storage in a dark storage chamber. This sequence shall be repeated 6 times for total exposure time of 48 hours. Following the solar radiation test, the spectacles shall pass all the requirements as specified in 3.6.9.

4.8.9.2 Laser saturation. The spectacle lenses shall be spectrally scanned with a scanning spectrophotometer before and after the laser saturation tests and the results recorded. The lenses shall be exposed to laser energies at the protective wavelengths starting at an intensity below which any bleaching and/or damage will occur. The intensity shall be increased until reversible saturation (temporary bleaching) and/or damage to the lenses occurs. The results shall be stated in terms of wavelength and energy density at which bleaching and/or damage occur.

4.8.10 Adhesion of coating. The specimens shall be subjected to humidity tests as specified in MIL-STD-810, method 507 Procedure 1, for 120 hours (five cycles). Immediately upon removal from the humidity chamber, the samples shall be dried with a cotton cloth and then subjected to the adhesion test. A test tape, with an adhesion rating of 40 ounces per inch of width, shall be firmly applied to the front surface of the lens. The area covered shall be 2 square inches. The tape is then removed using a snapping motion applied 90 degrees to the specimen. Two trials at separate locations shall be made using this method. The following 3M tapes are acceptable: 670 (preferred), 202, 218 and 232. The tested areas shall be closely examined. The spectacles shall pass the requirements as specified in 3.6.10.

4.8.11 Ballistic resistance. The ballistic test shall be conducted in accordance with MIL-STD-662 and using a caliber .22 T37 fragment simulating projectile. The spectacle lens shall be rigidly mounted with the area to be impacted normal to the line of fire. An aluminum foil witness sheet, 0.002 inch thick, shall be mounted two inches behind the area of impact. One valid impact shall be made on each lens at optical center. An impact shall be considered valid only if it meets any of the following:

a. The impact velocity of the projectile is between 550 feet per second and 560 feet per second.

b. The impact velocity of the projectile is less than 550 feet per second and the impacted lens fails to meet the requirements in 3.6.11.

c. The impact velocity of the projectile is more than 560 feet per second and the impacted lens meets the requirements in 3.6.11

The lens containing the valid impact and the witness sheet shall be examined for conformance to the requirements in 3.6.11. Any penetration on the witness sheet shall be considered evidence of spall.

4.8.12 Crush resistance of carrying case. The carrying case with the spectacles inside, in the closed position, shall be placed on a flat surface. A force of 13.3 kilograms shall then be applied over a circular area of 160 square millimeters on the face of the closed case over the center of each lens. The carrying case shall pass the requirements specified in 3.6.12.1.

4.8.13 Identification of product. The inside right temple shall be inspected for the information required in 3.6.13.

5. PACKAGING

5.1 Preservation. Preservation shall be level A or C as specified (6.2j).

5.1.1 Level A. The dimensions of each paperboard box shall be appropriate to provide a snug fit for the spectacles in the carrying case.

5.1.2 Level C. Spectacles and case shall be packaged to afford adequate protection against physical damage during shipment from the supply source to the first receiving activity. The package and quantity per package shall be the same as that normally used by the contractor for retail distribution.

5.1.3 Caution notice. The Caution Notice (see 3.6.14) shall be placed in the carrying case with each pair of spectacles.

5.2 Packing. Packing shall be level A, B or C as specified (6.2j).

5.2.1 Level A. The spectacles, packaged in the containers as specified in 5.1.1, shall be packed in fiberboard containers conforming to PPP-B-636, type CF, weather resistant class, variety SW, grade V3c. Closure and strapping of the containers shall be in accordance with the container specification.

5.2.2 Level B. Spectacles, packaged as specified in 5.1, shall be packed in fiberboard containers conforming to PPP-B-636, type CF, domestic class, variety SW, grade V3c. Closure and strapping of the containers shall be in accordance with the container specification. The gross weight of the packed shipping container shall not exceed the weight limitation of the container specification.

5.2.3 Level C. The spectacles, which require packing for acceptance by the carrier, (5.1) shall be packed within exterior type shipping containers in a manner that will insure safe transportation at the lowest rate to the point of delivery. The shipment shall conform to the minimum requirements of the rules and regulations applicable to the mode of transportation selected.

5.3 Marking. In addition to any special marking required by the contract or order, interior packages and shipping containers shall be marked in accordance with MIL-STD-129 and shall include the date of manufacture (month and year). Bar coding shall be applied in accordance with Appendix H.

6. NOTES

(This section contains information of a general or explanatory nature that may be helpful, but is not mandatory).

6.1 Intended use. The spectacles are for use by aircrew members for eye protection against exposure to seven discrete laser wavelengths.

6.2 Acquisition requirements. Acquisition documents must specify the following:

a. Title, number and date of this specification, including any amendments.

b. Government part number and quantity desired.

c. Issue of DODISS cited in the solicitation, and if required, the specific issue of individual documents referenced (2.2).

d. Instructions for requesting classified information. (The applicable wavelengths and the required densities to be supplied only upon submission of a request from the manufacturer which is accompanied by a secret clearance.

e. Applicable drawings, including revisions.

f. Whether first article inspection is waived (4.4.1).

g. The number of first article samples required (4.4.1).

h. Name and address of first article inspection laboratory (see 4.4.1), name of the Government activity responsible for conducting the first article inspection program (see 4.4.1.1) and the quality conformance verification program (see 4.6).

i. Whether certification of compliance is required (4.4.1.2).

j. Applicable levels of preservation, packaging, and packing (5.); including marking requirements (5.3).

k. Items of data required (6.3).

l. Instructions for requesting prescription to be demonstrated in qualification sample (4.3.1).

6.3 Consideration of data requirements. The following data requirements should be considered when this specification is applied on a contract. The applicable Data Item Descriptions (DID's) should be reviewed in conjunction with the specific acquisition to ensure that only essential data are requested/provided and that the DID's are tailored to reflect the requirements of the specific acquisition. To ensure correct contractual application of the data requirements, a Contract Data Requirements List (DD Form 1423) must be prepared to obtain the data, except where DOD FAR Supplement 27.475-1 exempts the requirement for a DD Form 1423.

Reference Paragraph	DID Number	DID Title	Suggested Tailoring
4.4.1.2	DI-NDTI-80809A	Test/Inspection	Para 10.2.7.1

The above DID was cleared as of the date of this specification. The current issue of DOD 5010.12-L, Acquisition Management Systems and Data Requirements Control List (AMSDL), must be researched to ensure that only current, cleared DID's are cited on the DD Form 1423.

6.4 Qualification. With respect to products requiring qualification, awards will be made only for products which are, at the time of award, qualified for inclusion on the applicable Qualified Products List (QPL-29594) whether or not such products have actually been so listed by that date. The attention of the contractors is called to these requirements, and manufacturers are urged to arrange to have the products that they propose to offer to the Federal Government tested for qualification in order that they may be eligible to be awarded contracts or purchase orders for the products covered by this specification. The activity responsible for the Qualified Products List is the Commander, Naval Air Systems Command, Department of the Navy, Washington, DC 20361; however, authorization for qualification of products shall be obtained from the Commanding Offier Naval Air Warfare Center Aircraft Division, Warminster, PA 18974-5000, Attention: Code 6031.

6.5 First article. When first article inspection is required, the contracting officer should provide specific guidance to offerors whether the item(s) should be a first article sample, a first production item, or a standard production item from the contractor's current inventory and the number of items to be tested as specified in 4.4.1. The contracting officer should include specific instructions in acquisition documents regarding arrangements for examinations, approval of first article test results and disposition of first articles. Invitations for bids should provide that the Government reserves the right to waive the requirement for samples for first article inspection to those bidders offering a product which has been previously acquired or tested by the Government, and that bidders offering such products, who wish to rely on such production or test, must furnish evidence with the bid that prior Government approval is presently appropriate for the pending contract.

6.6 Source for AR-S frames. The frames described in 3.4 are available from:

Birch Designs Ltd
Manor Royal
Crawley, West Sussex, England
RH102XQ

6.7 Subject term (key word) listing.

Eye protection
Laser eye protection (LEP)
Laser radiation
Optical
Optical density

Preparing Activity
NAVY-AS
(Project No. 8465-N117)

TABLE I Qualification inspection.

Inspection	Requirement	Test Method
Visual examination	3.6.1	4.8.1
Matching	3.6.2	4.8.2
Prismatic deviation	3.6.3	4.8.3
Vertical prismatic deviation	3.6.3.1	4.8.3.1
Horizontal prismatic deviation	3.6.3.2	4.8.3.2
Spherical & cylindrical power	3.6.4	4.8.4
Lens defects	3.6.5	4.8.5
Lens fit	3.6.6	4.8.6
Curvature	3.6.7	4.8.7
Optical density	3.6.8.1	4.8.8.1
Luminous transmittance	3.6.8.2	4.8.8.2
Erythemal ultraviolet transmittance	3.6.8.3	4.8.8.3
Haze	3.6.8.4	4.8.8.4
Abrasion resistance	3.6.8.5	4.8.8.5
Radiation induced damage resistance	3.6.9	4.8.9
Solar radiation	3.6.9	4.8.9.1
Laser saturation	3.6.9	4.8.9.2
Adhesion of coating	3.6.10	4.8.10
Ballistic resistance	3.6.11	4.8.11
Crush resistance of carrying case	3.6.12.1	4.8.12
Identification of product	3.6.13	4.8.13
Caution notice	3.6.14	5.1.3

TABLE II First article inspection

Inspection	Requirement	Test Method
Visual examination	3.6.1	4.8.1
Matching	3.6.2	4.8.2
Prismatic deviation	3.6.3	4.8.3
Vertical prismatic deviation	3.6.3.1	4.8.3.1
Horizontal prismatic deviation	3.6.3.2	4.8.3.2
Spherical & cylindrical power	3.6.4	4.8.4
Lens defects	3.6.5	4.8.5
Lens fit	3.6.6	4.8.6
Curvature	3.6.7	4.8.7
Optical density	3.6.8.1	4.8.8.1
Luminous transmittance	3.6.8.2	4.8.8.2
Erythemal ultraviolet transmittance	3.6.8.3	4.8.8.3
Haze	3.6.8.4	4.8.8.4
Identification of product	3.6.13	4.8.13
Caution notice	3.6.14	5.1.3

TABLE III Quality conformance inspection.

Inspection	Method	Sampling Size	Acceptance Criteria
Visual examination (see classification of defects)	4.8.1	a. Every spectacle for critical defects.	Reject all units with any defects
		b. Inspection Level II 1/ for minor defects.	Acceptance nmbr. zero (no defects)
Dimensions	4.8.1.2	Inspection Level S-2 1/	Acceptance number zero (no defects)
Packaging	4.8.1.3	Inspection Level S-2 1/	Acceptance number zero (no defects)
Matching	4.8.2	Every pair of spectacles	Reject units with critical defects
Vertical prismatic deviation	4.8.3.1	Every pair of spectacles	Reject units with critical defects
Horizontal prismatic deviation	4.8.3.2	Every pair of spectacles	Reject units with critical defects
Sphere & cylinder	4.8.4	Every pair of spectacles	Reject units with critical defects
Lens defects	4.8.5	Every pair of spectacles	Reject units with critical defects
Lens fit	4.8.6	Every pair of spectacles	Reject units with critical defects
Curvature	4.8.7	Every pair of spectacles	Reject units with critical defects
Optical density	4.8.8.1	Every pair of spectacles	Reject units with critical defects
Luminous transmittance	4.8.8.2	Every pair of spectacles	Reject units with critical defects
Erythemal ultraviolet transmittance	4.8.8.3	Every pair of spectacles	Reject units with critical defects
Haze	4.8.8.4	Every pair of spectacles	Reject units with critical defects

1/ The sample size shall be based only on the applicable sample size code letter corresponding to the specified inspection level of MIL-STD-105.

TABLE IV. Classification of defects for visual and dimensional examination of the spectacles with case. 1/

Item	Defect	Critical	Minor
Frame	Burr or sharp edge that may cause injury	X	
	Cosmetic imperfection such as scratch that does not affect performance		X
Lens	Material imperfection - embedded foreign matter, striae, waviness, cloudiness, bubbles, stain or discoloration not readily removed with water that adversely affects the protection levels and/or visual properties.	X	
	Imperfections described above that do not adversely affect the level of protection and/or the visual properties.		X
	Crack, hole, pit, scratch, chip or break	X	
	Identification marking and or lot number missing, misspelled, illegible and or incorrect	X	
Construction & workmanship	Improper fit of lens with frame	X	
	Component missing or damaged	X	
	Any component not of the best quality, not of the proper size or lightest practical weight or suitable for the intended purpose	X	
Carrying case	Case missing	X	
	Case insert missing	X	
	Color not as specified		X
Caution Notice	Missing - not included in carrying case	X	
	Not worded as stated in this specification paragraph 3.6.14	X	

1/ Defect shall be classified as major when seriously affecting serviceability or appearance; otherwise, it is to be classified as a minor defect.

NOTE: Any defect determined to be minor based on the Table III classifications shall be subject to the Military Standard cited in the contract regarding disposition or acceptance of non-conforming materials.

TABLE V. List of defects for packaging.

Item	Defect
Contents	Unit package contains more than one one pair of spectacles with case
Exterior and interior marking	Missing, incomplete, incorrect, illegible; marking of improper size, location sequence or method of application; exterior and interior marking different.
Packaging and packing material	Inadequate application of the components material such as incomplete closure of pack, intermediate package, case liners, container flaps, loose strappings, etc; bulging or distortion of containers.
Weight or content	Number per container is more or less than required; gross or net weight exceeds the requirements.

Table VI. Calculating photopic and scotopic transmittance.

Wavelength	Vλ	Vλ′	T	VλxT	Vλ′xT
380	.0000	.00059	**.0000**	.0000	.0000
385	.0001	.00111	**.0000**	.0000	.0000
390	.0001	.00221	**.0000**	.0000	.0000
395	.0002	.00453	**.0000**	.0000	.0000
400	.0004	.00929	**.0000**	.0000	.0000
405	.0006	.01850	**.0000**	.0000	.0000
410	.0012	.03484	**.0000**	.0000	.0000
415	.0022	.06040	**.0000**	.0000	.0000
420	.0040	.09660	**.0000**	.0000	.0000
425	.0073	.14360	**.0000**	.0000	.0000
430	.0116	.19980	**.0000**	.0000	.0000
435	.0168	.26250	**.0000**	.0000	.0000
440	.0230	.32810	**.0000**	.0000	.0000
445	.0298	.39310	**.0000**	.0000	.0000
450	.0380	.45500	**.0000**	.0000	.0000
455	.0480	.51290	**.0000**	.0000	.0000
460	.0600	.56720	**.0000**	.0000	.0000
465	.0739	.62050	**.0000**	.0000	.0000
470	.0910	.67560	**.0000**	.0000	.0000
475	.1126	.73370	**.0000**	.0000	.0000
480	.1390	.79300	**.0000**	.0000	.0000
485	.1693	.85090	**.0001**	.0000	.0001
490	.2080	.90430	**.0000**	.0000	.0000
495	.2586	.94910	**.0000**	.0000	.0000
500	.3230	.98170	**.0000**	.0000	.0000
505	.4073	.99840	**.0000**	.0000	.0000
510	.5030	.99660	**.0000**	.0000	.0000
515	.6082	.97500	**.0000**	.0000	.0000
520	.7100	.93520	**.0000**	.0000	.0000
525	.7932	.87960	**.0000**	.0000	.0000
530	.8620	.81100	**.0000**	.0000	.0000
535	.9149	.73320	**.0004**	.0004	.0003
540	.9540	.64970	**.0037**	.0035	.0024
545	.9803	.56440	**.0221**	.0217	.0125
550	.9950	.48080	**.0710**	.0706	.0341
555	1.0002	.40150	**.1437**	.1437	.0577
560	.9950	.32880	**.2129**	.2118	.0700
565	.9786	.26390	**.2608**	.2552	.0688
570	.9520	.20760	**.2889**	.2750	.0600
575	.9154	.16020	**.3014**	.2759	.0483
580	.8700	.12120	**.3016**	.2624	.0366
585	.8163	.08990	**.2915**	.2380	.0262
590	.7570	.06550	**.2763**	.2092	.0181
595	.6949	.04690	**.2596**	.1804	.0122
600	.6310	.03325	**.2384**	.1504	.0079
605	.5668	.02312	**.2118**	.1200	.0049
610	.5030	.01593	**.1775**	.0893	.0028
615	.4412	.01088	**.1394**	.0615	.0015
620	.3810	.00737	**.1055**	.0402	.0008

Table VI. Calculating photopic and scotopic transmittance.

Wavelength	Vλ	Vλ´	T	VλxT	Vλ´xT
625	.3210	.00497	**.0822**	.0264	.0004
630	.2650	.00334	**.0677**	.0179	.0002
635	.2170	.00224	**.0577**	.0125	.0001
640	.1750	.00150	**.0492**	.0086	.0001
645	.1382	.00101	**.0416**	.0057	.0000
650	.1070	.00068	**.0347**	.0037	.0000
655	.0816	.00046	**.0278**	.0023	.0000
660	.0610	.00031	**.0207**	.0013	.0000
665	.0446	.00021	**.0141**	.0006	.0000
670	.0320	.00015	**.0083**	.0003	.0000
675	.0232	.00010	**.0039**	.0001	.0000
680	.0170	.00007	**.0015**	.0000	.0000
685	.0119	.00005	**.0005**	.0000	.0000
690	.0082	.00004	**.0002**	.0000	.0000
695	.0057	.00003	**.0001**	.0000	.0000
700	.0041	.00002	**.0000**	.0000	.0000
705	.0029	.00001	**.0000**	.0000	.0000
710	.0021	.00000	**.0000**	.0000	.0000
715	.0015	.00000	**.0000**	.0000	.0000
720	.0010	.00000	**.0000**	.0000	.0000
725	.0007	.00000	**.0000**	.0000	.0000
730	.0005	.00000	**.0000**	.0000	.0000
735	.0004	.00000	**.0000**	.0000	.0000
740	.0003	.00000	**.0000**	.0000	.0000
745	.0002	.00000	**.0000**	.0000	.0000
750	.0001	.00000	**.0001**	.0000	.0000
755	.0001	.00000	**.0000**	.0000	.0000
760	.0001	.00000	**.0001**	.0000	.0000
Totals:	21.3714	19.4142		2.6886	.4659

NOTE: The numbers in bold type shall be replaced by measurements made on the device under test.

The example is for a multiple-wavelength laser protection.

Symbols Vλ = Photopic relative luminosity (CIE 1924 standard)
Vλ´= Scotopic relative luminosity (CIE 1924 standard)
T = Transmittance of device under test (bold type)
T_p = Percent photopic transmittance
T_s = Percent scotopic transmittance

Example: 1) Multiply Vλ by T at each wavelength.
2) Multiply Vλ´ by T at each wavelength.
3) Obtain separate totals for the numbers in VλxT, Vλ , Vλ´xT and Vλ´ columns.
4) Sum of VλxT divided by sum of Vλ is the photopic transmittance. Multiply this by 100 to get percent: T_p = 2.69/21.3 x 100 = 12.6%
5) Sum of Vλ´xT divided by Vλ´ is the scotopic transmittance. Multiply this 100 to get percent: T_s = .466/19.41 x 100 = 2.4.%

ACCEPTABLE

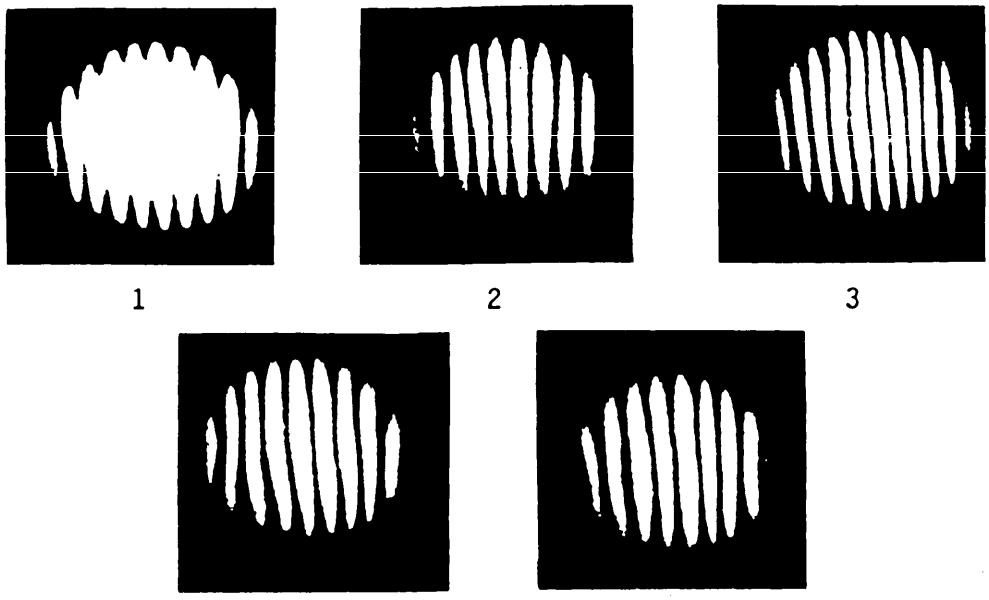

UNACCEPTABLE

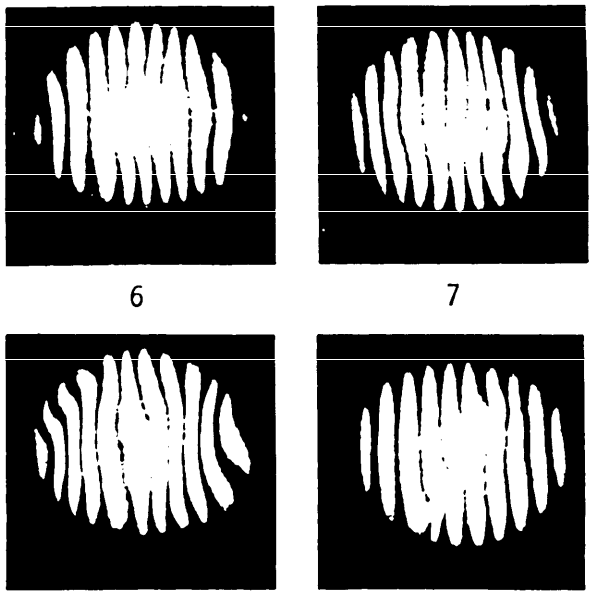

FIGURE 1. Spectacles distortion standards.

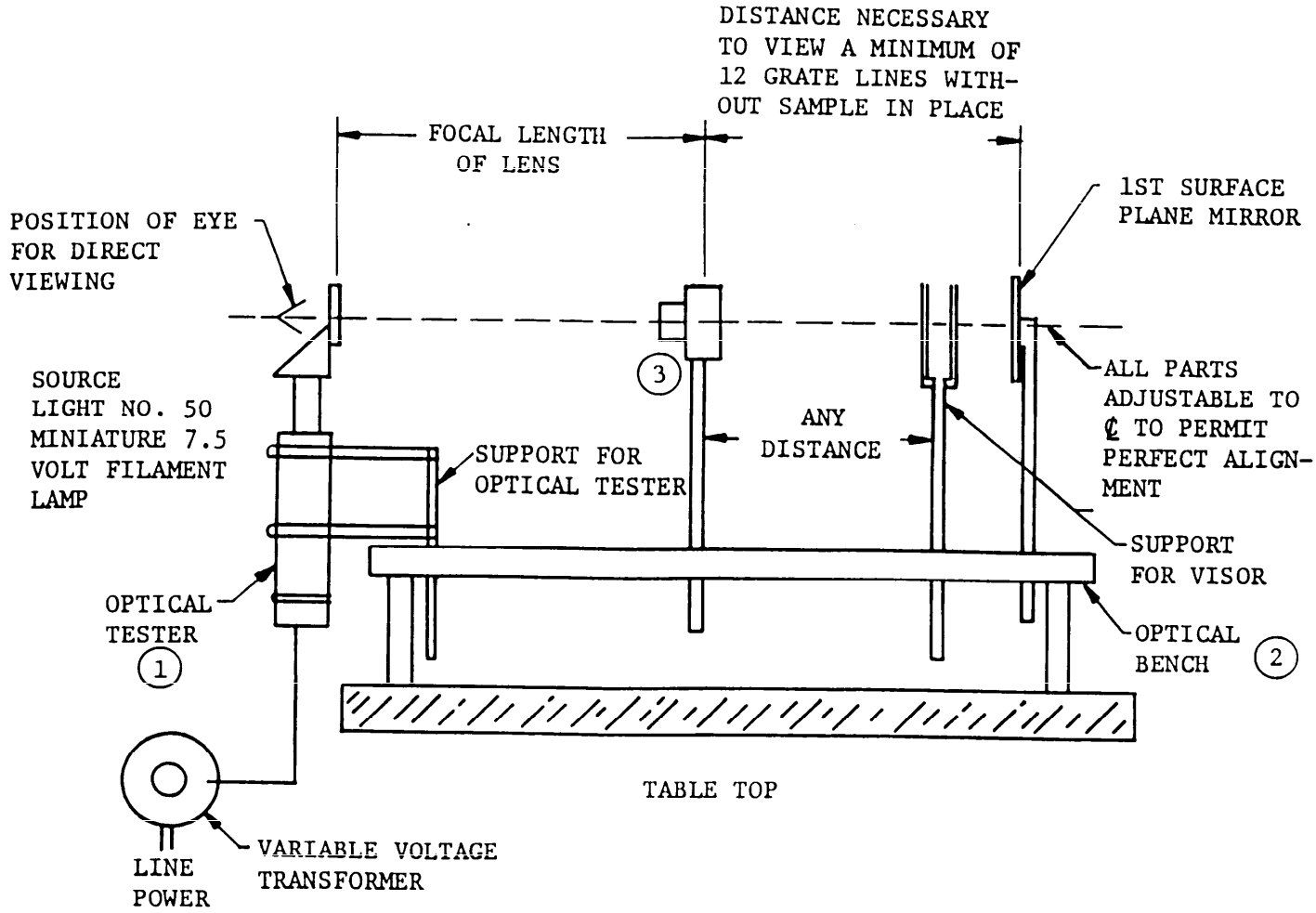

1. MODEL "B" OPTICAL TESTER WITH A 60-LINE GRATING, WITH MODEL "O" OPTICAL BENCH ADAPTER OR EQUIVALENT. (OBTAINABLE FROM ANN ARBOR OPTICAL CO., P.O. BOX 2056, ANN ARBOR, MICHIGAN).

2. OPTICAL BENCH OBTAINABLE FROM CENTRAL SCIENTIFIC CO., OR ITS EQUIVALENT OBTAINABLE FROM ANY EQUIPMENT SUPPLIER.

3. TELEPHOTO CAMERA LENS - A SCHNEIDER TELE-ARTON 1:5.5/240 mm, NORMAL COLOR COATED, BARREL ONLY OR EQUIVALENT.

FIGURE 2. Distortion tester (New London-Ann Arbor).

Commanding Officer
Naval Air Warfare Center Aircraft Division Lakehurst
Systems Requirements Department (Code SR3)
Lakehurst, NJ 08733-5100

The formulation for devil's food cake mix shall be as follows:

STANDARDIZATION DOCUMENT IMPROVEMENT PROPOSAL

INSTRUCTIONS

1. The preparing activity must complete blocks 1, 2, 3, and 8. In block 1, both the document number and revision letter should be given.
2. The submitter of this form must complete blocks 4, 5, 6, and 7.
3. The preparing activity must provide a reply within 30 days from receipt of the form.

NOTE: This form may not be used to request copies of documents, nor to request waivers, or clarification of requirements on current contracts. Comments submitted on this form do not constitute or imply authorization to waive any portion of the referenced document(s) or to amend contractual requirements.

I RECOMMEND A CHANGE:	1. DOCUMENT NUMBER MIL-S-29594 (AS)	2. DOCUMENT DATE (YYMMDD) 92/07/17

3. DOCUMENT TITLE
SPECTACLES, AVIATOR'S, SEVEN WAVELENGTH LASER EYE PROTECTIVE

4. NATURE OF CHANGE (Identify paragraph number and include proposed rewrite, if possible. Attach extra sheets as needed.)

5. REASON FOR RECOMMENDATION

6. SUBMITTER

a. NAME (Last, First, Middle Initial)	b. ORGANIZATION	
c. ADDRESS (Include Zip Code)	d. TELEPHONE (Include Area Code) (1) Commercial (2) AUTOVON (If applicable)	7. DATE SUBMITTED (YYMMDD)

8. PREPARING ACTIVITY

a. NAME	b. TELEPHONE (Include Area Code)	
COMMANDING OFFICER, NAVAL AIR WARFARE CENTER AIRCRAFT DIVISION LAKEHURST SYSTEMS REQUIREMENTS DEPARTMENT	(1) Commercial (908) 323-7488	(2) AUTOVON 624-7488
c. ADDRESS (Include Zip Code) CODE SR3 LAKEHURST, NJ 08733-5100	IF YOU DO NOT RECEIVE A REPLY WITHIN 45 DAYS, CONTACT: Defense Quality and Standardization Office 5203 Leesburg Pike, Suite 1403, Falls Church, VA 22041-3466 Telephone (703) 756-2340 AUTOVON 289-2340	