Downloaded from http://www.everyspec.com

MIL-S-24149/1D(SH)
10 June 1988
SUPERSEDING
MIL-S-24149/1C
1 June 1981

MILITARY SPECIFICATION SHEET

STUD, WELDING, AND ARC SHIELDS (FERRULES); TYPE I, CLASS 1,2,3, AND TYPE II, CLASS 1,4,5,5A,6, CARBON STEEL, FOR DIRECT ENERGY ARC WELDING

This specification is approved for use within the Naval Sea Systems Command, Department of the Navy, and is available for use by all Departments and Agencies of the Department of Defense.

The requirements for acquiring the studs and arc shields (ferrules) described herein shall consist of this specification and the latest issue of MIL-S-24149 (SH).

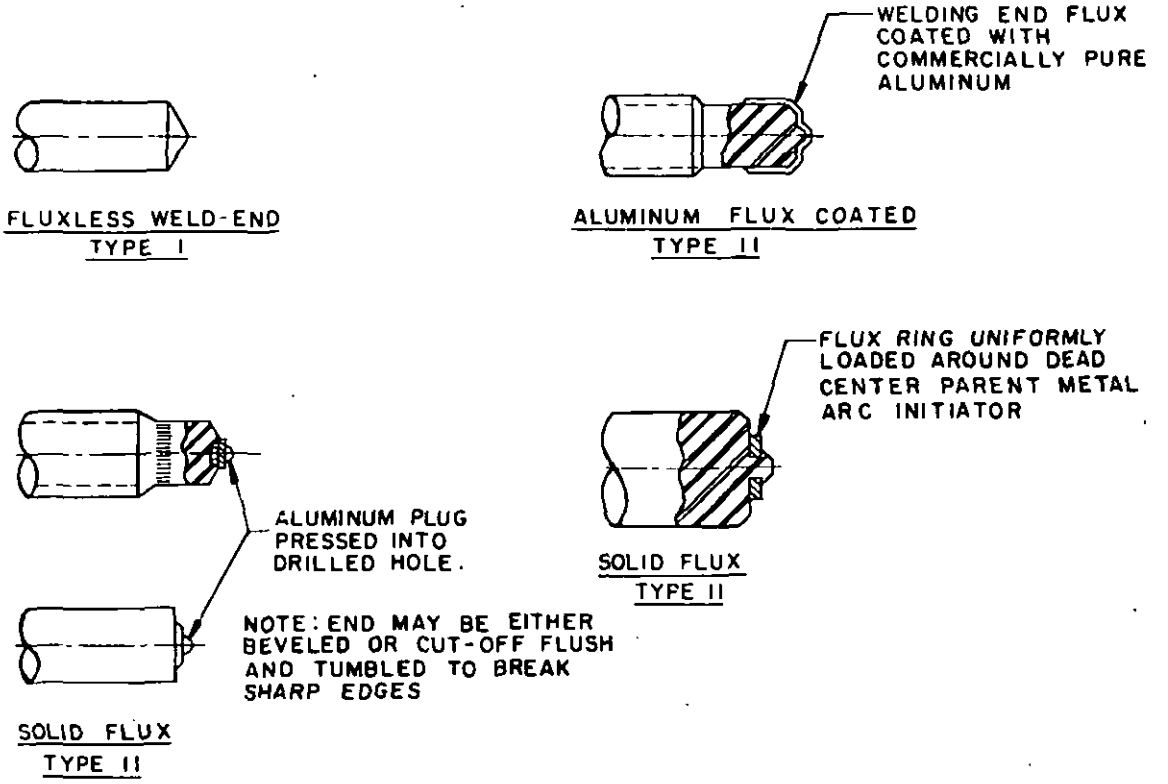

NOTE:

1. See requirement 5.

SH 13231824

FIGURE 1. OPTIONAL WELD-END DETAILS, TYPES I AND II STUDS.

DISTRIBUTION STATEMENT A: Approved for public release; distribution is unlimited.

Downloaded from http://www.everyspec.com

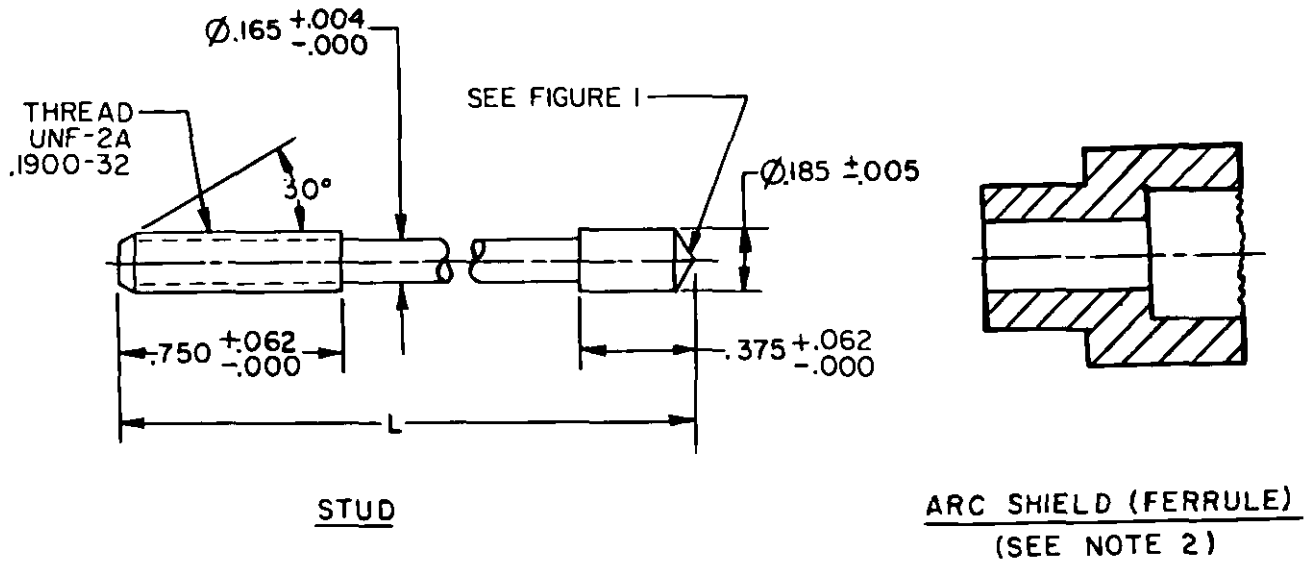

FIGURE 2. TYPE I, CLASS 1, HEADED STUD. SH 13231825

TABLE I. LENGTH PART NUMBERS.

L ±.031	M24149/1 DASH NO.
1.250	1
1.375	2
1.500	3
1.625	4
1.750	5
1.875	6
2.000	7
2.250	8
2.500	9
3.000	10
3.500	11

NOTES:

1. Length "L" shown is the overall length of the stud before welding. The stud will be approximately 1/8 to 3/16 inch shorter after welding.
2. Part number includes the stud and the arc shield (ferrule).
3. Dimensions are in inches. Unless otherwise specified, tolerances: decimals ± .015, angles ± 2°.

Downloaded from http://www.everyspec.com

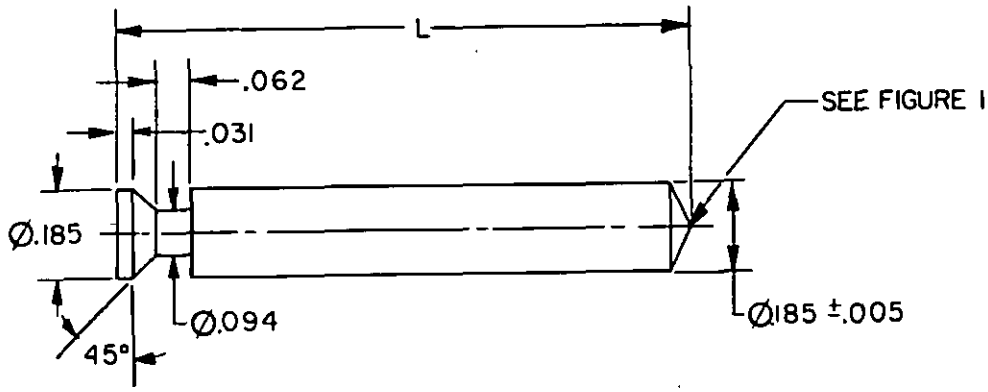

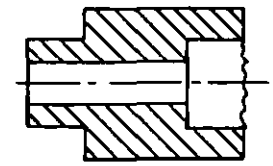

STUD

ARC SHIELD (FERRULE)
(SEE NOTE 2)

FIGURE 3. TYPE I, CLASS 2, STUD WITH NOTCHED END.

SH 13231826

TABLE II. LENGTH PART NUMBERS.

L ±.031	M24149/1 DASH NO.
.750	101
.875	102
1.000	103
1.125	104
1.250	105
1.375	106
1.500	107
1.625	108
1.750	109
1.875	110
2.000	111
2.250	112
2.500	113
2.750	114
3.000	115

NOTES:

1. Length "L" shown is the overall length of the stud before welding. The stud will be approximately 1/8 to 3/16 inch shorter after welding.
2. Part number includes the stud and the arc shield (ferrule).
3. Dimensions are in inches. Unless otherwise specified, tolerances: decimals ± .015, angles ± 2°.

Downloaded from http://www.everyspec.com

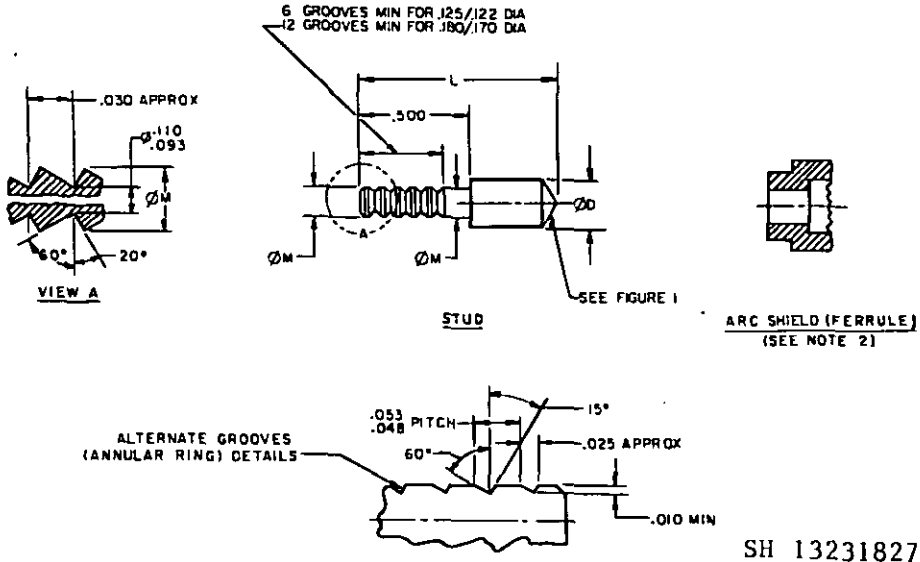

SH 13231827

FIGURE 4. TYPE I, CLASS 3, STUD WITH GROOVES

TABLE III. CONFIGURATION PART NUMBERS.

M24149/1 DASH NO	STUD L ±.031	ØD ±.005	ØM
201	.750		
202	.875		
203	1.000		
204	1.125		
205	1.250		
206	1.375		
207	1.500		
208	1.625	.125	.125 .122
209	1.750		
210	1.875		
211	2.000		
212	2.250		
213	2.500		
214	2.750		
215	3.000		
216	.750		
217	.875		
218	1.000		
219	1.125		
220	1.250		
221	1.375		
222	1.500		
223	1.625	.185	.180 .170
224	1.750		
225	1.875		
226	2.000		
227	2.250		
228	2.500		
229	2.750		
230	3.000		

NOTES:

1. Length "L" shown is the overall length of the stud before welding. The stud will be approximately 1/8 to 3/16 inch shorter after welding.
2. Part number includes the stud and the arc shield (ferrule).
3. Dimensions are in inches. Unless otherwise specified, tolerances: decimals ± .015, angles ± 1°.

Downloaded from http://www.everyspec.com

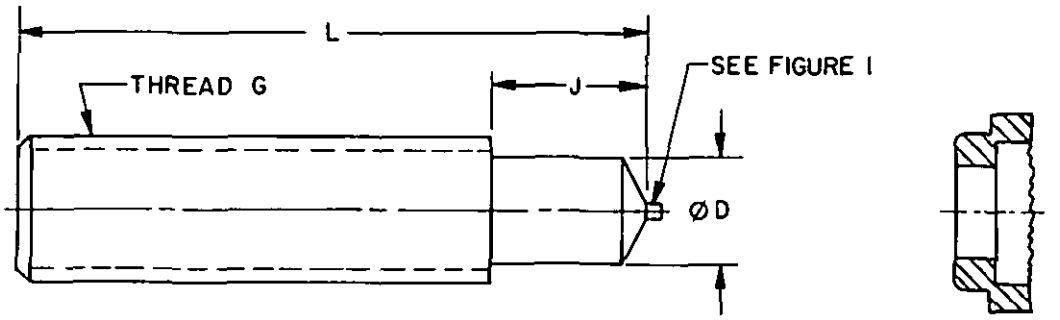

STUD

ARC SHIELD (FERRULE)
(SEE NOTE 2)

FIGURE 5. TYPE II, CLASS 1, PITCH DIAMETER STUD

SH 13231827

TABLE IV. TABULATED DIMENSIONS.

	STUD		
	G UNC-2A	J +.062 -.000	ØD ±.005
1/	.2500-20	.375	.215
	.3125-18	.375	.275
	.3750-16	.385	.330
2/	.3750-16	.750	.330
	.4375-14	.437	.387
	.5000-13	.500	.448
	.6250-11	.625	.562
	.7500-10	.791	.680

1/ .2500-20 thread size studs may be fluxless, solid flux or flux coated.
2/ Use dash no. -410

TABLE V. CONFIGURATION PART NUMBERS.

L ±.031	M24149/1 DASH NUMBERS						
	.2500-20	.3125-18	.3750-16	.4375-14	.5000-13	.6250-11	.7500-10
.750	301	318	335	—	—	—	—
.875	302	319	336	—	—	—	—
1.000	303	320	337	352	367	—	—
1.125	304	321	338	353	368	—	—
1.250	305	322	339	354	369	382	—
1.375	306	323	340	355	370	383	—
1.500	307	324	341	356	371	384	396
1.625	308	325	342	357	372	385	397
1.625	—	—	410	—	—	—	—
1.750	309	326	343	358	373	386	398
1.875	310	327	344	359	374	387	399
2.000	311	328	345	360	375	388	400
2.125	—	—	—	408	—	—	—
2.250	312	329	346	361	376	389	401
2.500	313	330	347	362	377	390	402
2.625	—	—	—	409	—	—	—
2.750	314	331	348	363	378	391	403
3.000	315	332	349	364	379	392	404
3.250	316	333	350	365	380	393	405
3.500	317	334	351	366	381	394	406
3.750	—	—	—	—	—	395	407

NOTES:

1. Length "L" shown is the overall length of the stud before welding. The stud will be approximately 1/8 to 3/16 inch shorter after welding.
2. Part number includes the stud and the arc shield (ferrule).
3. Dimensions are in inches. Unless otherwise specified, tolerances: decimals ± .015.

Downloaded from http://www.everyspec.com

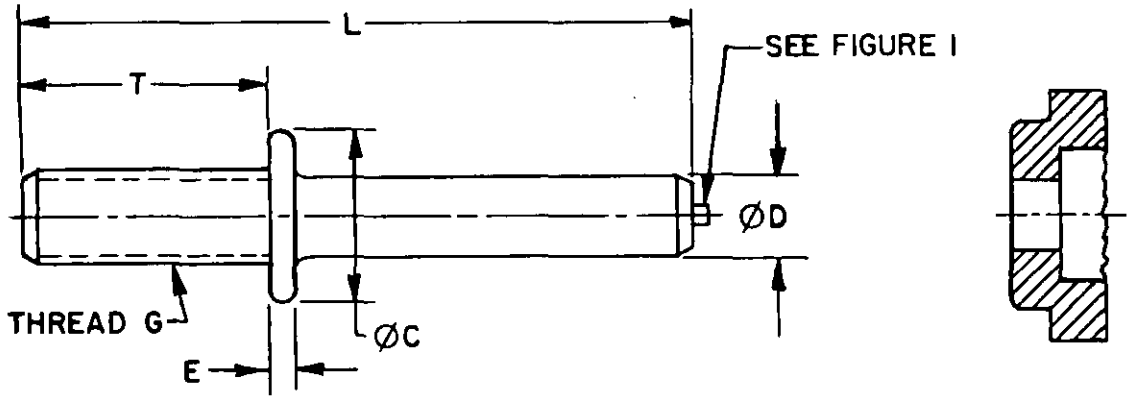

STUD

ARC SHIELD (FERRULE)
(SEE NOTE 2)

SH 13231829

FIGURE 6. TYPE II, CLASS 4 COLLAR STUD

TABLE VI. TABULATED DIMENSIONS.

STUD			
G UNC-2A	ØD ±.005	ØC +.062 -.005	E
.2500-20	.215	.500	.093
.3125-18	.275	.625	.093
.3750-16	.330	.625	.125/.093
.5000-13	.448	.750	.156/.093

TABLE VII. CONFIGURATION PART NUMBERS.

L ±.031	T .2500-20 .3125-18 .3750-16	T .5000-13	M24149/1 DASH NUMBERS .2500-20	.3125-18	.3750-16	.5000-13
1.000	.500	—	501	—	539	—
1.125	.625	—	502	518	540	—
1.250	.750	—	503	519	541	—
1.375	.750	.875	504	520	542	563
1.500	.750	.875	505	521	543	564
1.625	.750	.875	506	522	544	565
1.750	.750	.875	507	523	545	566
1.875	.750	.875	508	524	546	567
2.000	.750	.875	509	525	547	568
2.250	.750	.875	510	526	548	569
2.500	.750	.875	511	527	549	570
2.750	.750	.875	512	528	550	571
3.000	.750	.875	513	529	551	572
3.125	—	—	—	—	577	—
3.250	.750	.875	514	530	552	573
3.500	.750	.875	515	531	553	574
3.750	.750	.875	516	532	554	575
4.000	.750	.875	517	533	555	576
4.250	.750	—	—	534	556	—
4.500	.750	—	—	535	557	—
4.750	.750	—	—	536	558	—
5.000	.750	—	—	537	559	—
5.250	.750	—	—	538	560	—
5.500	.750	—	—	—	561	—
5.750	.750	—	—	—	562	—
6.000	.750	—	—	—	—	—

NOTES:

1. Length "L" shown is the overall length of the stud before welding. The stud will be approximately 1/8 to 3/16 inch shorter after welding.
2. Part number includes the stud and the arc shield (ferrule).
3. Dimensions are in inches. Unless otherwise specified, tolerances: decimals ± .015.

Downloaded from http://www.everyspec.com

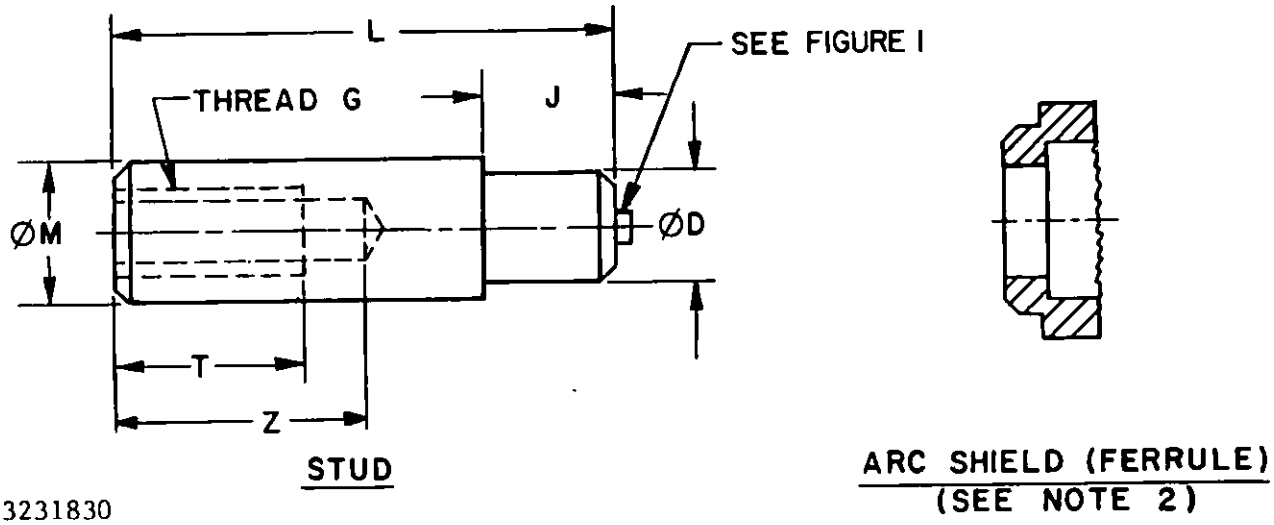

SH 13231830

FIGURE 7. TYPE II, CLASS 5, INTERNAL THREAD STUD, REDUCED BASE

TABLE VIII. TABULATED DIMENSIONS.

STUD					
G UNC-2B	Ø D ±.005	T MIN	J +.062 -.000	Ø M	Z +.060 -.000
.2500-20	.375	.375	.375	.500	.515
.3125-18	.437	.468	.437	.562	.624
.3750-16	.500	.562	.437	.625	.733
.5000-13	.500	.750	.437	.750	.953

TABLE IX. CONFIGURATION PART NUMBERS.

L ±.031	M24149/1 DASH NUMBERS			
	.2500-20	.3125-18	.3750-16	.5000-13
1.125	601	—	—	—
1.250	602	613	624	—
1.375	603	614	625	—
1.500	604	615	626	—
1.625	605	616	627	—
1.750	606	617	628	—
1.875	607	618	629	—
2.000	608	619	630	635
2.250	609	620	631	636
2.500	610	621	632	637
2.750	611	622	633	638
3.000	612	623	634	639
3.250	—	—	—	640

NOTES:

1. Length "L" shown is the overall length of the stud before welding. The stud will be approximately 1/8 to 3/16 inch shorter after welding.
2. Part number includes the stud and the arc shield (ferrule).
3. Dimensions are in inches. Unless otherwise specified, tolerances: decimals ± .015.

Downloaded from http://www.everyspec.com

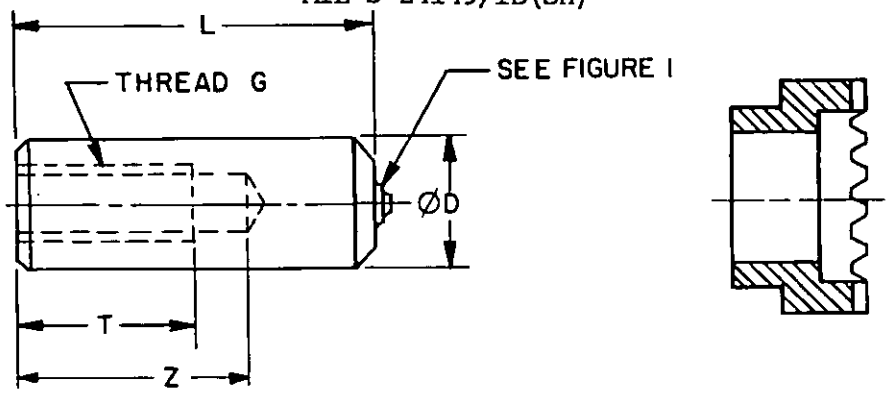

STUD

ARC SHIELD (FERRULE)
(SEE NOTE 2)

SH 13231831

FIGURE 8. TYPE II, CLASS 5A, INTERNAL THREADED STUD, FULL BASE

TABLE X. TABULATED DIMENSIONS.

STUD			
G UNC-2B	Ø D ±.005	T MIN	Z +.060 -.000
.2500-20	.500	.375	.515
.3125-18	.562	.468	.624
.3750-16	.625	.562	.733
.5000-13	.750	.750	.953

TABLE XI. CONFIGURATION PART NUMBERS.

L ±.031	M24149/1 DASH NUMBERS			
	.2500-20	.3125-18	.3750-16	.5000-13
.875	701	—	—	—
1.000	702	715	—	—
1.125	703	716	728	—
1.250	704	717	729	—
1.375	705	718	730	740
1.500	706	719	731	741
1.625	707	720	732	742
1.750	708	721	733	743
1.875	709	722	734	744
2.000	710	723	735	745
2.250	711	724	736	746
2.500	712	725	737	747
2.750	713	726	738	748
3.000	714	727	739	749

NOTES:

1. Length "L" shown is the overall length of the stud before welding. The stud will be approximately 1/8 to 3/16 inch shorter after welding.
2. Part number includes the stud and the arc shield (ferrule).
3. Dimensions are in inches. Unless otherwise specified, tolerances: decimals ± .015.

Downloaded from http://www.everyspec.com

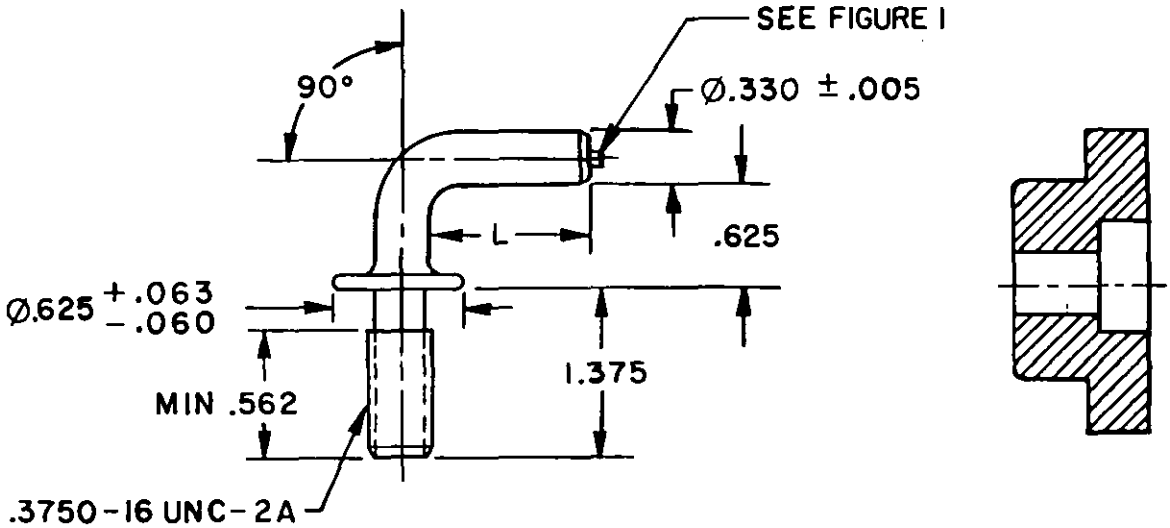

STUD

ARC SHIELD (FERRULE)
(SEE NOTE 2)

SH 13231832

FIGURE 9. TYPE II, CLASS 6, ANGLE COLLAR STUD.

TABLE XII. LENGTH PART NUMBERS.

L ±.031	M24149/1 DASH NO.
.625	901
.750	902
.875	903
1.000	904
1.125	905
1.250	906
1.375	907
1.500	908
1.625	909
1.750	910
1.875	911
2.000	912
2.125	920
2.250	913
2.500	914
2.750	915
3.000	916
3.250	917
3.500	918
3.750	919

NOTES:

1. Length "L" shown is the overall length of the stud before welding. The stud will be approximately 1/8 to 3/16 inch shorter after welding.
2. Part number includes the stud and the arc shield (ferrule).
3. Dimensions are in inches. Unless otherwise specified, tolerances: decimals ± .015, angles ± 2°.

Downloaded from http://www.everyspec.com

REQUIREMENTS:

1. Material.

   a. Studs - carbon steel.

   b. ARC shield (ferrules) - heat resistant ceramic.

   c. Welding flux-solid flux or aluminum coated flux.

2. Tensile strength. 50,000 psi minimum.

3. Chemical composition. Studs shall be of the chemical composition indicated in Table XIII.

TABLE XIII. CHEMICAL COMPOSITION.

CARBON	MANGANESE	PHOSPHORUS	SULPHUR	IRON
.23	.90	.040	.050	Remainder

1/ The chemical compositions are standard AISI heat analysis and AISI product tolerances shall apply. Unless otherwise specified, values are maximum percentages (AISI 1008 -1022 are acceptable.)

4. Finish. Finish shall be zinc coating or flash copper plating, as specified. When zinc coating is specified, it shall not be within .250 inch from the weld-end.

5. Weld-end design. The stud manufacturer shall be responsible for design of weld ends that will provide a sound weld when used with the proper ferrule.

6. Part number. The part number consists of letter "M", the basic number of this specification sheet, followed by a code indicating the flux on the weld-end, followed by a length dash number taken from TABLES I, II, III, V, VII, IX, XI or XII, followed by a code letter indicating the type of coating.

   Weld-end flux -

   Add "-" following the basic part number to indicate fluxless weld-end.
   Add "A" in lieu of the dash for solid flux weld-end.
   Add "C" in lieu of the dash for aluminum flux coated weld-end.

   Type of coating -

   Add "Z" as a suffix to the dash number for zinc coating.
   Add "C" as a suffix to the dash number for flash copper plating.

Downloaded from http://www.everyspec.com

Example: M24149/1-7Z

- Coating code letter
- Dash number
- Weld-end flux code
- Specification sheet number

M24149/1-7Z indicates - Type I, Class 1, welding stud and arc shield; .1900-32UNF thread; 2.000 inch length; fluxless weld-end; zinc coated.

M24149/1A11Z indicates - Type I, Class 2, welding stud and arc shield; .185 O.D.; 2.000 inch length; solid flux weld-end; zinc coated.

NOTES:

1. Interchangeability - Where the plate thickness permits, Class 5A may be used interchangeably with Class 5.

2. Change from previous issue - Revision letters are not used to denote changes due to the extensiveness of the changes.

Preparing Activity:
Navy - SH

Agent:
DLA - IS

(Project 5307-N021)

Review Activity:

DLA - IS

User Activity:
Army - AR

☆U.S. GOVERNMENT PRINTING OFFICE: 1988 - 505-033/92664