MIL-S-23190E
28 March 1986
SUPERSEDING
MIL-S-23190D
14 March 1973
MIL-C-2156B
14 April 1965

MILITARY SPECIFICATION

STRAPS, CLAMPS, AND MOUNTING HARDWARE, PLASTIC AND METAL FOR CABLE HARNESS TYING AND SUPPORT

This specification is approved for use by all Departments and Agencies of the Department of Defense.

1. SCOPE

1.1 This specification covers a series of plastic and metal components and devices used for the tying and support of cable, cable assemblies and wire in electrical, electronic and communication equipment, and in interconnection systems.

1.2 Classification. Components for cable harness tying and support covered by this specification shall be of the following types and classes, as specified (see 6.2):

Type I - Strap, Tie Down, Adjustable, Plastic

Type II - Strap, Tie Down, Identification, Adjustable, Plastic

Type III - Clamp, Loop, Plastic, Wire Support

Type IV - Plastic Mounting Hardware for Type I and Type II Straps

Type V - Clamp, Loop, Cushioned, Metal, Wire Support

Type VI - Strap, Tie Down, Adjustable, Metal

Class 1 - Components which conform to all the requirements of this specification and the applicable MS standard, or specification sheet.

Beneficial comments (recommendations, additions, deletions) and any pertinent data which may be of use in improving this document should be addressed to: Systems Engineering and Standardization Department (SESD) (Code 93), Naval Air Engineering Center, Lakehurst, NJ 08733, by using the self-addressed Standardization Document Improvement Proposal (DD Form 1426) appearing at the end of this document or by letter.

FSC 5975
AMSC N/A
FSC 5340

Class 2 - Components which conform to the material, marking and performance requirements of this specification, are replaceable by Class 1 components and, where applicable, installed with a tool recommended by the component manufacturer. Class 2 components shall be within the envelope dimensions of the replacement Class 1 components.

2. REFERENCED DOCUMENTS

2.1 Government documents.

2.1.1 Specifications, standards and handbooks. Unless otherwise specified, the following specifications, standards and handbooks of the issue listed in that issue of the Department of Defense Index of Specifications and Standards (DODISS) specified in the solicitation form a part of this specification to the extent specified herein (see 2.4.1).

SPECIFICATIONS

Federal

QQ-S-766	Steel Plates, Sheets, and Strip Corrosion Resisting
TT-I-735	Isopropyl Alcohol
PPP-B-576	Box, Wood, Cleated Veneer, Paper Overlaid
PPP-B-591	Boxes, Shipping, Fiberboard, Wood-Cleated
PPP-B-601	Boxes, Wood, Cleated Plywood
PPP-B-621	Box, Wood, Nailed and Lock-Corner
PPP-B-636	Box, Fiberboard
PPP-B-640	Box, Fiberboard, Corrugated, Triple-Wall

Military

MIL-P-116	Preservation, Methods of
MIL-W-5086/2	Wire, Electric, Hookup and Interconnecting, Polyvinyl Chloride Insulation, PVC-Glass-Nylon, Tin-Coated Copper Conductor, 600-Volt, 105°C
MIL-H-5606	Hydraulic Fluid, Petroleum Base, Aircraft, Missile, and Ordnance
MIL-T-5624	Turbine Fuel, Aviation, Grades JP-4 and JP-5
MIL-L-7808	Lubricating Oil, Aircraft Turbine Engine, Synthetic Base

STANDARDS

Military

MIL-STD-105	Sampling Procedures and Tables for Inspection by Attributes
MIL-STD-129	Marking for Shipment and Storage
MIL-STD-130	Identification Marking of U. S. Military Property
MIL-STD-202	Test Methods for Electronic and Electrical Components Parts
MIL-STD-45662	Calibration System Requirements
MS90387	Tool, Hand, Adjustable, for Plastic and Metal Cable Straps

(For associated MS standards and specification sheets, see Supplement.)

2.2 Other publications. The following documents form a part of this specification to the extent specified herein. Unless otherwise specified, the issues of the documents which are DOD adopted shall be those listed in the issue of the DODISS specified in the solicitation. The issues of documents which have not been adopted shall be those in effect on the date of the cited DODISS (see 2.4.2).

ASTM

*ASTM D 3951	Standard Practices Commercial Packaging
*ASTM D 4066	Nylon, Injection and Extrusion Materials (PA)
ASTM D 789	Nylon, Injection, Molding and Extrusion Materials

SAE The Engineering Resource for Advancing Mobility

Aerospace Information Report AIR-1351

Uniform Classification Committee

Uniform Freight Classification

2.3 Order of precedence. In the event of a conflict between the text of this specification and the references cited herein, the text of this specification shall take precedence.

2.4 Source of documents.

*DOD adopted

2.4.1 Government specifications, standards and handbooks. Copies of the referenced federal and military specifications, standards and handbooks are available from the Department of Defense Single Stock Point, Commanding Officer, Naval Publications and forms Center, 5801 Tabor Avenue, Philadelphia, PA 19120. For specific acquisition functions, these documents should be obtained from the contracting activity or as directed by the contracting activity.

2.4.2 Sources for nongovernment publications. Nongovernment documents are generally available for reference from libraries and technical groups. The documents listed may be obtained as follows:

a. ASTM: Application for copies should be addressed to the American Society for Testing Materials, 1916 Race Street, Philadelphia, PA 19103.

b. AIR 1351: Application for copies should be addressed to the SAE, 400 Commonwealth Drive, Warrendale, PA 15096.

c. Uniform Freight Classification: Application for copies should be addressed to the Uniform Classification Committee, Room 202, Union Station, 516 West Jackson Boulevard, Chicago, IL 60606.

3. REQUIREMENTS

3.1 Detail requirements. The individual component requirements shall be as specified herein and in accordance with the applicable MS standard or specification sheet. In the event of any conflict between requirements of this specification and the military standard or specification sheet, the latter shall govern.

3.2 Qualification. The components furnished under this specification shall be a product which has been tested and has passed the qualification tests specified herein, and has been listed on or approved for listing on the applicable Qualified Products List. Each type shall be qualified separately.

3.3 Materials. Materials shall be fungus resistant, noncorrosive, and as specified on the applicable military standard or specification sheet. When a definite material is not specified, a material shall be used which will enable the component to meet the performance requirements of this specification. Acceptance or approval of any constituent material shall not be construed as a guarantee for acceptance of the finished product.

3.3.1 Toxic or injurious gases. The component material shall not give off toxic or injurious gases when subjected to the rated temperature of the component (see 6.6).

3.3.2 Melting point. Components composed of polyamide (nylon) rigid materials shall be tested in accordance with 4.6.6. The test pieces shall be from the final component and not the raw material. The melt point shall be as specified in ASTM D 4066 (see 6.5).

3.4 Design and construction. Components shall be designed for guiding and harnessing cable or wire bundles which are used for the interconnection of electrical and electronic equipment.

3.4.1 Dimensions. Components shall comply with all dimensional requirements specified in this specification, the applicable military standard (MS) or detail specification when tested in accordance with 4.6.1.

3.4.2 Class I application (see 1.2). For Class I application, the component shall be designed to perform with the military tool specified in the military standard (MS) or specification sheet (see 3.1).

3.4.3 Class II application (see 1.2). For Class II application, the component shall be designed to perform with the tool specified by the component's manufacturer control drawing. The Class II component is approved for usage only with those tools used for assembly of the component at the time of qualification (see 4.4).

3.4.4 Clamps (Types III and V). Clamps in the relaxed condition shall be formed through a minimum of 270° of the opening circumference.

3.5 Performance. The components shall pass the performance requirements specified when subjected to the tests of 4.6.2 through 4.6.7 after exposure to the moisture conditioning test of 4.6.2.

3.5.1 Tensile strength. The component shall meet the minimum tensile strength requirements specified on the applicable MS standard or specification sheet when tested in accordance with 4.6.3 without breaking the component, or releasing the locking device.

3.5.2 Life cycle. The life cycle requirements shall be as specified in 3.5.2.1 and 3.5.2.2.

3.5.2.1 Vibration. The component shall meet the vibration requirements when tested as specified in 4.6.4.1 without cracking, distorting, breaking or releasing the locking device.

3.5.2.2 Temperature cycling. All components shall pass the temperature cycling requirements when tested as specified in 4.6.4.2 without cracking, distorting, breaking, or releasing the locking device.

3.5.3 Fluid immersion. All components shall be immersed in the designated fluids and tested as specified in 4.6.5 without cracking, distorting, breaking, or releasing the locking device.

3.5.4 Corrosion. When specified (see 3.1), the component shall meet the salt spray (corrosion) requirements when tested as specified in 4.6.7 with no evidence of basic metal corrosion.

3.6 Identification of product.

3.6.1 Manufacturer's identification. The manufacturer's name and/or symbol shall be permanently and legibly marked on the outer surface of the component and shall be legible after completion of all the test requirements specified in this specification. If a symbol or abbreviation is used, it shall be listed in AIR-1351.

3.6.2 Military part number. When required by the applicable military standard (MS) or specification sheet, the military part number shall be permanently and legibly marked on the outer surface of the component and shall be legible after completion of all the test requirements specified in this specification.

3.7 Workmanship. The components shall be uniform in quality and shall be free from irregularities or defects which could adversely affect performance, reliability or durability. Workmanship shall be in accordance with the most current, highest quality manufacturing practices.

4. QUALITY ASSURANCE PROVISIONS

4.1 Responsibility for inspection. Unless otherwise specified in the contract or purchase order, the supplier is responsible for the performance of all inspection requirements as specified herein. Except as otherwise specified in the contract or order, the supplier may use his own or any other facilities suitable for the performance of the inspection requirements specified herein, unless disapproved by the Government. The Government reserves the right to perform any of the inspections set forth in the specification where such inspections are deemed necessary to assure suppliers and services conform to prescribed requirements.

4.1.1 Test equipment and inspection facilities. Test equipment and inspection facilities shall be of sufficient accuracy, quality and quantity to permit performance of the required inspection. The supplier shall establish calibration of inspection equipment to the satisfaction of the Government. Calibration of the standards which control the accuracy of the inspection equipment shall comply with the requirements of MIL-C-45662.

4.2 Classification of inspections. The inspection of the components shall be classified as:

a. Component-Materials Inspection (4.3).

b. Qualification Inspection (4.4).

c. Quality Conformance Inspection (4.5).

4.3 Component-materials inspection. Component-materials inspection shall consist of verification that the component materials listed on the applicable military standard or specification sheet used in fabricating the components, are in accordance with the applicable referenced specifications or requirements prior to such fabrication.

4.4 Qualification inspections. Qualification test samples for Class 1 and Class 2 components shall be subjected to all examinations and tests shown in Table I. Qualification by similarity to components previously qualified or to be qualified may be provided by the activity designated responsible for qualification (6.4.1). Request for such qualification shall be technically justified in writing to the responsible activity. Qualification tests shall not be performed without a letter of authorization from the activity designated responsible for qualification. Any change in the contractor's process control inspections, quality conformance inspections, or manufacturing control drawings (editorial changes are acceptable) without the express approval of the activity responsible for qualification may result in loss of qualification for that product.

TABLE I. Qualification inspections.

Examination or Test	Requirement Paragraph	Examination or Test Paragraph	Number of Samples
GROUP I			
Visual and Dimensional Examinations	3.4 3.6	4.6.1	25 1/
Workmanship	3.7		
GROUP II			
Moisture Conditioning	3.5	4.6.2	25 (from Group I)
GROUP III			
Tensile Strength	3.5.1	4.6.3	10
GROUP IV			
Life Cycle	3.5.2	4.6.4	4
GROUP V			
Fluid Immersion	3.5.3	4.6.5	8
GROUP VI			
Melting Point	3.3.2	4.6.6	1
GROUP VII			
Corrosion	3.5.4	4.6.7	2

NOTE:

1/ Only six (6) samples of each submitted part number shall be inspected for compliance with physical dimensions.

4.4.1 Test report. The contractor shall furnish the activity responsible for qualification with one certified test report containing the following information:

a. The quantitative results for all tests required by this specification.

b. The component-material inspection verification data (4.3).

c. The manufacturing control drawing numbers for Class 1 and 2 components with the latest revision designators and drawing dates.

d. A tabulated comparison of the dimensions specified herein (3.4.1) and each manufacturing control drawing.

e. For Class 2 components the report shall include the manufacturer control drawing numbers with the latest revision designation and date for the tool used to qualify the component. The part number for the tool shall also be included.

4.4.2 Qualification test samples. The number of component specimens submitted to qualification inspection for each sample type for which qualification is sought shall be as shown in Group 1 of Table I. The specimen shall then be divided into the various groups as indicated in Table I. Unless otherwise specified (3.1 and 4.4.3) each dash number designated in each class for which qualification is sought shall be submitted to the Qualification inspection in Table I. The total number of specimens shall be as shown in Group 1 then divided into the various groups as indicated. Untested samples may be required to be submitted to the activity responsible for qualification.

4.4.3 Qualification by similarity. One component size (designation) may qualify similar component sizes if the dimensions controlled by the manufacturer for the size being subjected to qualification inspection is insignificantly different from the sizes being qualified by similarity. Any qualification by similarity shall be authorized by the activity responsible for qualification (6.8).

4.4.4 Failures. Failure of any component to conform to any of the requirements of this specification shall be cause for refusal to grant qualification approval for that group of components represented by the sample.

4.4.5 Retention of qualification. At 36 month intervals the supplier shall request authorization to forward to the activity responsible for qualification a summary of the results of Group A and B tests indicating a minimum, the number of lots which passed and the number which failed, and a summary of the results of the Group C tests, including the number and type of any part failures. The summary shall include those tests performed during that 36-month period. If the summary of the test results indicates nonconformance with specification requirements, action may be taken to remove the failing product from the Qualified Products List. Failure to submit the summary may result in loss of qualification for that product. In addition to the periodic submission of inspection data, the supplier shall immediately notify the activity responsible for qualification at any time during the 36-month period that the inspection data indicates failure of the qualified product to meet the requirements of the specification.

4.5 Quality conformance inspections. Quality conformance inspections shall consist of the following examinations and tests:

a. Group A inspection (4.5.2).

b. Group B inspection (4.5.3).

c. Group C inspection (4.5.4).

d. Inspection of preparation for delivery (4.5.6).

Except as specified in 4.5.5, delivery of products which have passed Group A inspection shall not be delayed pending the results of Groups B and C inspection.

4.5.1 Inspection lot. An inspection lot shall consist of components of a single type, class, size and composition manufactured under essentially the same conditions and offered for inspection at one time.

4.5.2 Group A inspection. Group A inspection shall consist of the examinations and tests specified in Table II.

TABLE II. Group A inspection.

Test	Requirement	Method	AQL (Percent Defective)	
			Major	Minor
a. Dimensions 1/ Types I, II, III and IV	3.4.1	4.6.1	1.0	4.0
width			X	
thickness eff. length or diameter			X	
			X	
all other dimensions				X
Type IV				
opening(s) for strap			X	
mounting hole dimensions			X	
all other dimensions				X
b. Materials	3.3	4.6.1	X	
c. Workmanship and marking	3.7	4.6.1		X

1/ Only six (6) samples shall be inspected for compliance with physical dimensions.

4.5.2.1 Sampling plan. A random sample shall be selected from each inspection lot in accordance with Level I of MIL-STD-105 for inspection based on the specified AQL in Table II. Classification of defects shall be as specified in MIL-STD-105 and in Table II. A manufacturer's normal quality control tests and production tests may be used to fulfill Group A inspection, provided they at least equal the quality required by Table II.

4.5.3 Group B inspection. Group B inspection shall consist of the tests specified in Table III. Group B inspection shall be made on components selected from inspection lots which have passed Group A inspection.

TABLE III. Group B inspection.

Test	Requirements Paragraph	Method Paragraph
Subgroup 1 (8 components)		
Tensile strength	3.5.1	4.6.3
Subgroup 2 (1 component)		
Melting point	3.3.2	4.6.6

4.5.3.1 Sampling plan. Nine components shall be selected from those covered by a single MS standard or specification sheet and having the same part number, six months after the date of notification of qualification, and after each subsequent 6-month period. A manufacturer's normal quality control tests and production tests may be used to fulfill all or part of Group B inspection; however, all of the Group B inspection shall be completed as specified. Group B inspection is not required for the 6-month period during which Group C inspection is conducted.

4.5.3.2 Failures. If one or more components fail to pass Group B inspection, the sample shall be considered to have failed.

4.5.3.3 Disposition of samples. Samples which have been subjected to Group B inspection shall not be delivered on the contract or order.

4.5.4 Group C inspection. Test samples for Class 1 and Class 2 components shall be subjected to all the examinations and tests as specified in Table I, in the order shown.

4.5.4.1 Sampling plan. The number of samples shall be as specified in 4.4.2 and Table I. The samples shall be selected from production lots during the 36 months after the date of notification of qualification, and during each subsequent 36-month period.

4.5.4.2 Failures. If one or more units fail to pass Group C inspection, the sample shall be considered to have failed.

4.5.4.3 Disposition of sample units. Components which have been subjected to Group C inspection shall not be delivered on the contract or order.

4.5.5 Noncompliance. If a sample fails to pass Group B or Group C inspection, the supplier shall take corrective action on the materials or process, or both, as warranted, and on all units of product which can be corrected and which were manufactured under essentially the same conditions, with essentially the same materials, processes, etc., and which are considered subject to the same failure. Acceptance of the product shall be discontinued until corrective action, acceptable to the Government, has been taken. After the corrective action has been taken, Group B or Group C inspection, as applicable, shall be repeated on additional units (all inspection, or the inspection which the original sample failed, at the option of the Government). Group A inspection may be reinstituted in the event of failure of Group B inspection. Final acceptance shall be withheld until Group B or Group C reinspection, as applicable, has shown that the corrective action was successful. In the event of failure after reinspection, information concerning the failure and corrective action taken shall be furnished to the cognizant inspection activity and the qualifying activity.

4.5.6 Inspection of preparation for delivery. Sample packages or packs shall be selected in accordance with MIL-STD-105, Inspection Level S-3, AQL 2.5%, and inspected for preservation, packing and marking for shipment and storage in accordance with the requirements of Section 5 and the documents specified herein.

4.6 Test methods.

4.6.1 Visual and dimensional examination. Components both before and after testing shall be carefully examined to determine compliance with the requirements of this specification, applicable military standard, or specification sheet with respect to material, workmanship, form, marking and dimensions.

4.6.2 Moisture conditioning. The components shall be placed in a chamber maintained at a temperature of 49 -0, +3°C (120 -0, +5°F) with a relative humidity of 20 ± 5 percent for a minimum of 24 hours. Immediately upon removal from the chamber, the samples shall be stored in an airtight container for 30 minutes at room temperature. The components shall be installed immediately on the test fixtures after removal from the airtight container.

4.6.3 Tensile strength. The test sample shall be securely attached and positioned on the tensile test fixture as shown in the applicable Figures 1 thru 5. The fixture shall be positioned in a tensile testing machine and sufficient force applied to break the component or, when applicable, to release the locking device or separate the component strap from the component. The heads of the tensile test machine shall move apart at a speed of one inch per minute.

4.6.4 Life cycle. The life cycle tests of 4.6.4.1, 4.6.4.2 and 4.6.4.3 shall be made on the samples in the order shown. The random vibration portion of the life cycle tests shall be performed every other reporting period, starting with the initial qualification.

4.6.4.1 Vibration test. The component shall be installed on the wire bundle then mounted to the test fixture in the position indicated by the applicable figures 6 thru 10. The assembly (component, wire bundle and fixture), shall be called the fully loaded vibration test fixture. The fully loaded vibration test fixture shall be vibrated in accordance with Method 214, Test Condition II, Letter J of MIL-STD-202 in each of two mutually perpendicular directions. The duration shall be eight hours in each direction. The direction of vibration shall be along the axis of the bundle and perpendicular as specified in figures 6 through 10. Following the vibration test the component will be inspected for cracks, distortions, breaks, or releasing of the locking device. The fully loaded vibration test fixture shall then be subjected to the temperature cycling test (4.6.4.2).

4.6.4.2 Temperature cycling. The component mounted to the wire bundle in the position indicated by the applicable figures 6 thru 10 shall be subjected to the Thermal Shock Method 107, Test Condition B of MIL-STD-202. The time duration for steps 2 and 4 shall not be more than two minutes. Unless otherwise specified (3.1) the high temperature for step 3 shall be 135 +3°, -0°C. The component shall be inspected for cracks, distortions, breaks or releasing of the locking device, then subjected to the tensile strength test (4.6.4.3).

4.6.4.3 Tensile strength after life cycle. The life cycle samples shall be prepared for the tensile strength test by removing the wire bundle from the test fixture then removing the center wire(s) from the bundle permitting the wire bundle to collapse. Slip the component or component assembly off the collapsed bundle and remount to the test fixtures indicated in the applicable figures 1 thru 5. Perform the tensile strength test as specified in 4.6.3.

4.6.5 Fluid immersion. Individual components shall be installed on the respective tensile test fixtures as specified in applicable figures 1 thru 5. Two samples of each type and dash number shall be immersed for four hours in each of the following fluids maintained at a temperature of 48 to 50°C (118 to 122°F).

WARNING
The following fluids are highly toxic to skin, eyes and respiratory tract. They are also flammable. Eye and skin protection is required. Good general ventilation is normally adequate.

(a) MIL-H-5606 Hydraulic Fluid

(b) MIL-T-5624 Turbine Fuel

(c) MIL-L-7808 Lubricating Oil

(d) TT-I-735 Isopropyl Alcohol

Upon removal from the fluids, the components shall be wiped dry (excluding the locking mechanism)(and shall remain for one hour in free air at room temperature. The components shall then pass the tensile strength test (4.6.3).

4.6.6 Melting point. Melting point tests shall be made on plastic test samples in accordance with ASTM D 4066 per test methods of ASTM D 789 (see 6.5).

4.6.7 Corrosion. The component shall be installed on the applicable tensile test fixture in accordance with figures 1 and 2 and shall be subjected to a salt spray (corrosion) test in accordance with MIL-STD-202, Method 101, Condition A. The component shall be dried for 12 hours in a circulating air oven at a temperature of 38°C ± 3°C (100 ± 5°F). Upon removal from the oven the component shall be examined for corrosion (3.5.4) then tested for tensile strength in accordance with 4.6.3.

5. PACKAGING

5.1 Preservation. Preservation shall be Level A, B or Commercial (Commercial not for government use) as specified (see 6.2).

5.1.1 Level A. Plastic components shall be preserved in accordance with Method IC of MIL-P-116.

5.1.2 Level B. Metal components shall be preserved in accordance with Method IC of MIL-P-116.

5.1.3 Commercial. Components shall be preserved in accordance with ASTM D 3951 (commercial packaging).

5.2 Packing. Packing shall be Level A, B or Commercial as specified (see 6.2). The contents of the box shall not exceed the specified weight and size limitations of the classification selected.

5.2.1 Level A. Multiple unit packs preserved as specified in 5.1 shall be packed in snug fitting shipping containers conforming to PPP-B-601 (overseas) or PPP-B-621 (overseas). Closures shall be in accordance with the container specification.

5.2.2 Level B. Multiple limit packs, preserved as specified in 5.1 shall be packed in snug fitting shipping containers conforming to PPP-B-576 (Class 2), PPP-B-592 (weather resistant), PPP-B-621 (overseas or domestic), PPP-B-636 (weather resistant), or PPP-B-640 (weather resistant). Closures shall be in accordance with the container specification.

5.2.3 Commercial. Components shall be packed in accordance with ASTM D 3951. The shipping container and methods of packing shall conform to Uniform Freight Classification rules and Regulations or other carrier regulations as applicable to the mode of transportation.

5.3 Marking of shipments. In addition to any special marking required by the contract or order each unit pack and exterior container shall be marked in accordance with MIL-STD-129. The identification shall include, but not be limited to the following information listed in the order herein:

Name of Component

Type

* Military Part Number (including size, color, dash number, flat, ribbon or material).
Class
Specification MIL-S-23190
Manufacturer's Part Number

6. NOTES

6.1 Intended use. The components are intended for harnessing and guiding wire bundles with the diameters as shown on the applicable MS standard or specification sheet.

6.1.1 Strap application. Straps may be used on wire bundles containing solid dielectric coaxial cables provided that the tension setting on the MS90387 installing tool is not greater than that required to prevent axial slippage.

6.1.2 Temperature application. The maximum operating temperature for the component shall be as specified in the applicable MS standard or specification. Components containing polymide (nylon) rigid materials shall not be used at temperatures above 85°C (185°F).

6.2 Classification.

6.2.1 Class 1. Only Class 1 components are intended for use by military activities. Class 1 components will be the only class stocked by the services and supplied to their activities. Original equipment manufacturers are authorized to use either Class 1 or Class 2 components (see 1.2).

6.2.2 Class 2. Only original equipment manufacturers are authorized to use Class 2 components. Class 2 components are not to be used for replacement purposes (see 1.2).

6.2.2.1 Government acquisition. Class 2 components will not be stocked or supplied to the military services. When a military acquisition activity receives a request for Class 2 components, the acquisition activity shall acquire the Class 1 component in lieu of the Class 2 request.

6.2.2.2 Class 2 usage. Where Class 2 components are used, the installation will be such that Class 1 components will be adequate as a replacement without rework of the installation. Parts list will indicate the Class 1 component that will be used for service replacement of Class 2 components.

*Not applicable to Class 2.

6.2.3 Qualified Products List. All Class 1 part numbers, military and manufacturers' will be listed on the Qualified Products List. Qualified Class 2 manufacturers will be listed but not with their qualified part numbers. Upon request, a copy of the military approval letter list which has the Class 2 qualified part numbers may be obtained from the manufacturer. Verbal confirmation of the approved component may be obtained from the qualifying activity.

6.3 Hand installation tools. Hand installation tools (when applicable) conforming to the applicable MS standard or specification sheet and as approved by the activity responsible for qualification will be stocked by the services for field maintenance.

6.4 Ordering data. The acquisition document should specify the following:

a. Nomenclature - Title, specification number and date.

b. Military Part Number - As specified in the applicable military standard (MS) or specification sheet.

c. Class - Failure of the acquisition document to specify the class will automatically result in a Class 1 order. Only Class 1 components are to be ordered by the government for delivery to the military services (see 6.2.2).

d. Preparation for Delivery - The contract should specify the type of packaging (see 5.0).

6.5 Melting point of nylon. The types I, II and III nylon materials as previously specified in MIL-M-20693 Molding Plastic, Polyamide (Nylon) Rigid are respectively equivalent to types PA111, PA121, PA181, PA611 as specified in ASTM D 4066 Nylon Injection and Extrusion Materials.

6.6 Toxicity. Any questions regarding toxicity should be referred to the cognizant medical authority.

6.7 Qualification. With respect to products requiring qualification, awards will be made for products which are, at the time set for opening of bids, qualified for inclusion in the applicable Qualified Products List (QPL) whether or not such products have actually been so listed by that date. The attention of the suppliers is called to this requirement, and manufacturers are urged to arrange to have the products that they propose to offer to the Federal Government tested for qualification in order that they may be eligible to be awarded contracts or orders for products covered by this specification.

6.7.1 Application for qualification. The activity responsible for the QPL for MIL-S-23190 is the Naval Air Systems Command. The Naval Avionics Center has been designated by the Naval Air Systems Command as agent for the establishment of the QPL. Request for information pertaining to and applications for qualification should be addressed to:

Commanding Officer
Naval Avionics Center
Attention: Code B/714
6000 East 21st Street
Indianapolis, IN 46218

6.8 Changes from previous issue. The extent of changes (deletions, additions, etc.) preclude the annotation of the individual changes from the previous issue of this document.

Custodians:
Army - ER
Navy - AS
Air Force - 85

Review activities:
Army - AR, MI
Navy - EC
Air Force - 80, 99
DSA - GS
DOD - NS

User activities:
Army - AV, ME
Navy - SH, OS, MC
Air Force

Preparing activity:
Navy - AS
DOD Project No. 5975-0600

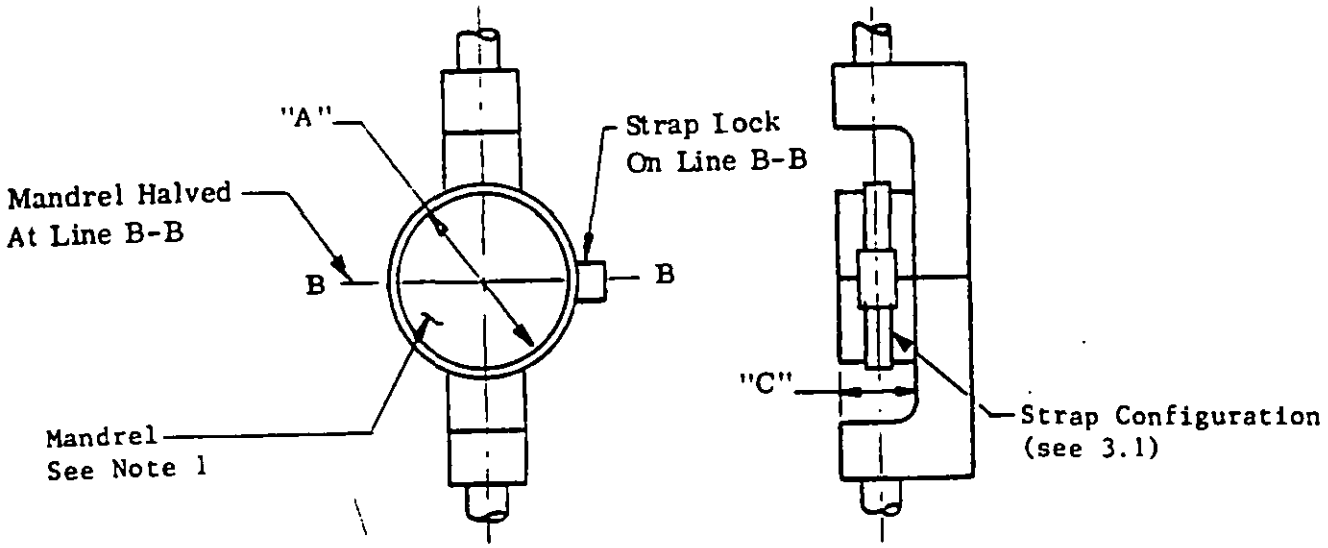

DIMENSIONS IN INCHES

NOTE 1

The mandrel diameter, Dimension A, shall be 0.375 inches for strap lengths 5 inches or less. For strap lengths greater than 5 inches, the mandrel diameter shall be 1.5 inches.

The mandrel width, Dimension C, shall be greater than the width of the strap component.

FIGURE 1. Tensile test fixture for strap components.

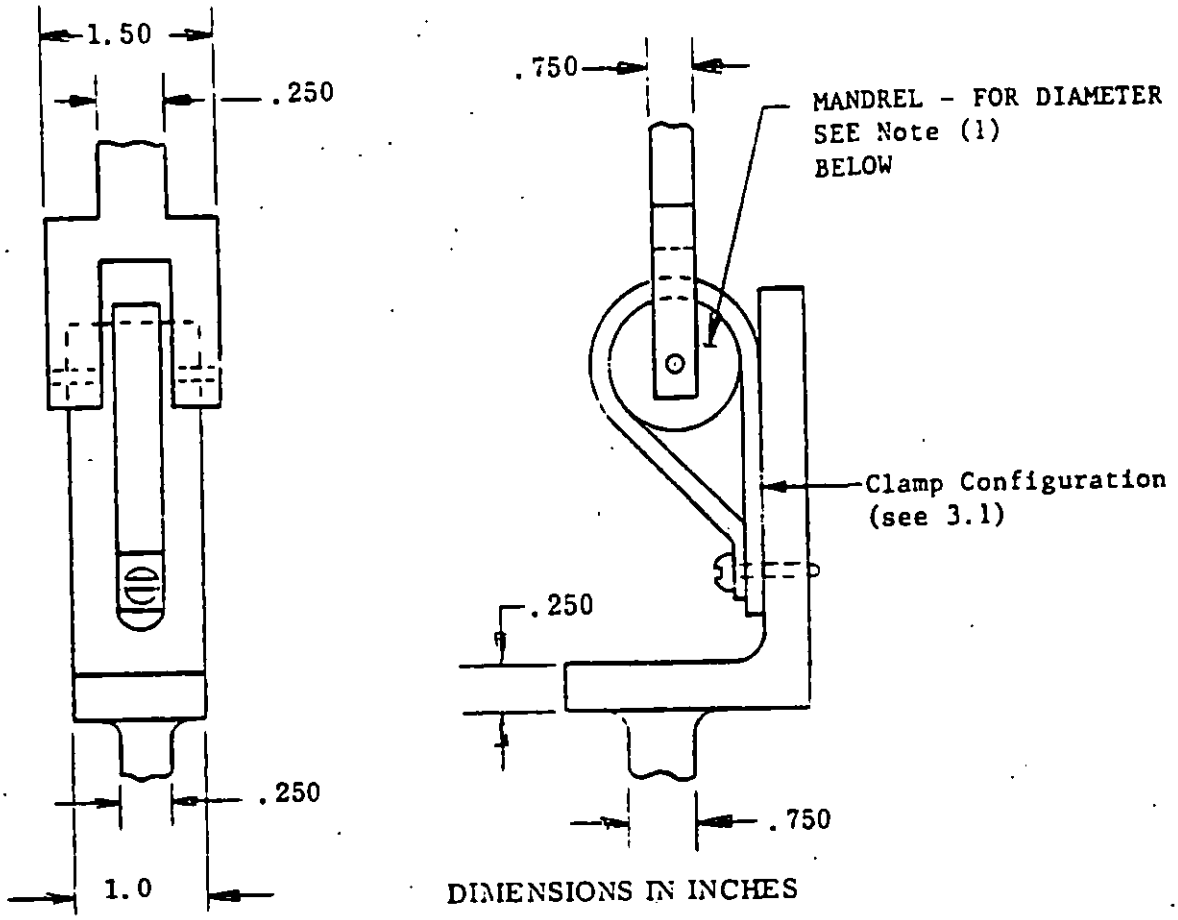

NOTE 1

The mandrel diameter shall be the nominal cable bundle size specified for each dash number listed in the applicable military standard (MS) or specification sheet.

FIGURE 2. Tensile test fixture for clamps.

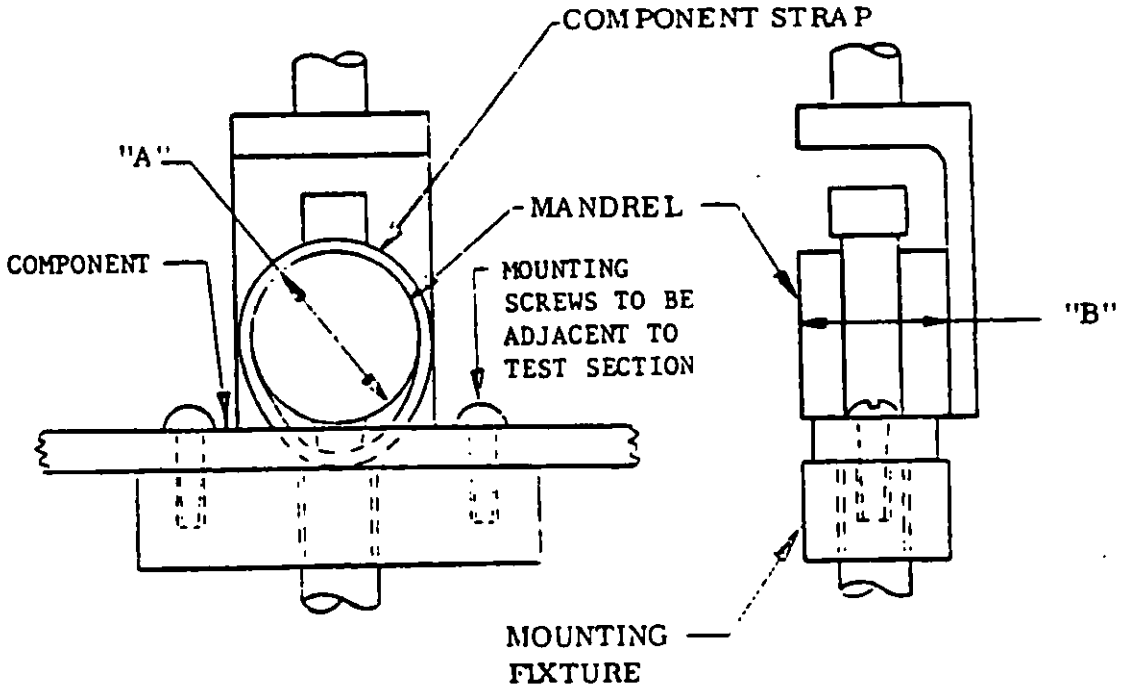

DIMENSIONS IN INCHES

Component	Component Strap Number	Mandrel Dimensions		Tensile Strength Lb. Min.
		A +.000, -.125	B Min	
MS 3339-1 thru -5	MS 3367-1	0.687	0.50	50
MS 3339-6 thru -11	MS 3367-3	0.875	0.75	120

FIGURE 3. Tensile test fixture for Type IV plastic mounting plate.

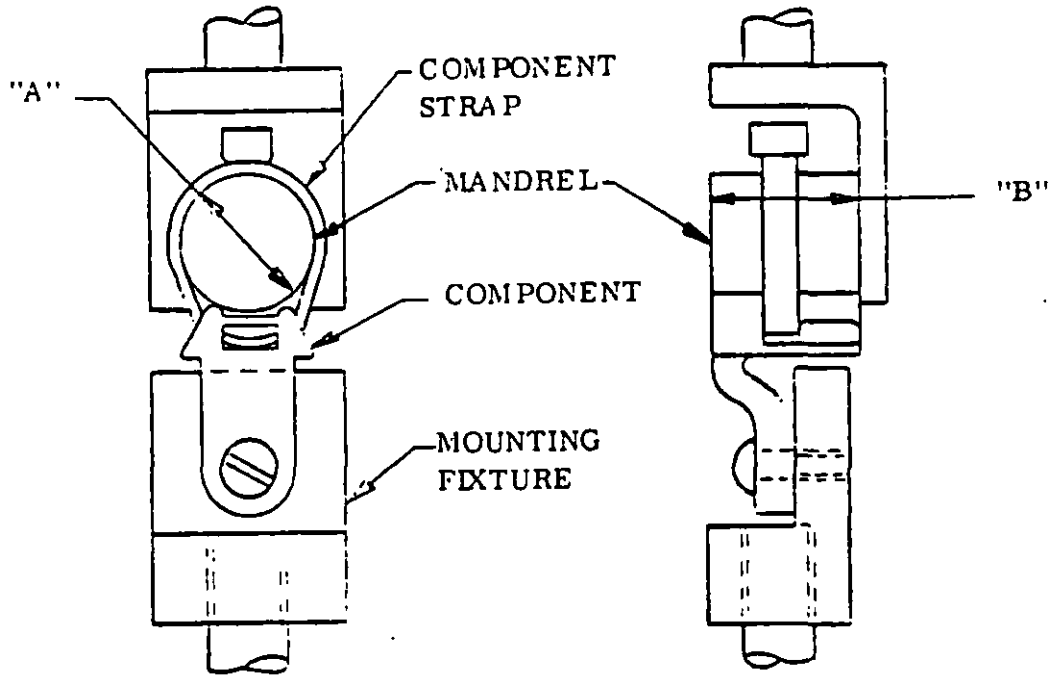

DIMENSIONS IN INCHES

Component	Component Strap Number	A +.000 -.125	B Min	Tensile Strength Lb. Min.
MS 3340-1	MS 3367-1	0.687	0.75	50

FIGURE 4. Tensile test fixture for Type IV bulkhead bracket.

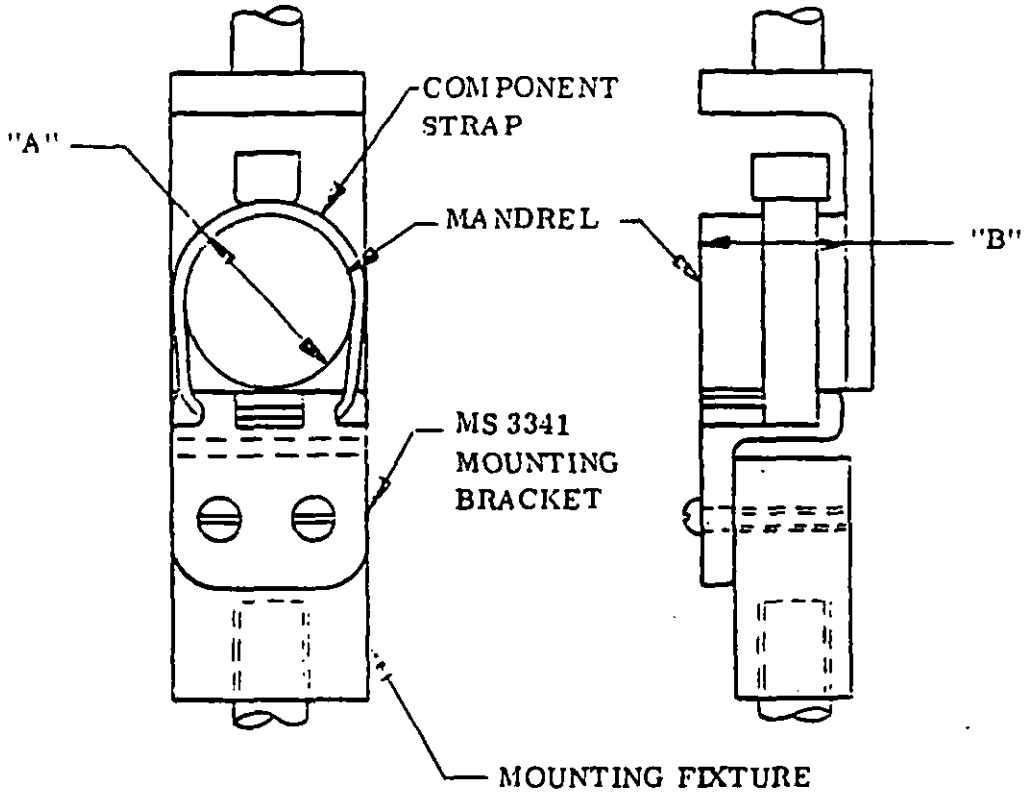

DIMENSIONS IN INCHES

Component	Component Strap Number	A +.000 -.125	B Min.	Tensile Strength Lb. Min.
MS 3341-1	MS 3367-3	0.875	0.75	120
MS 3341-2	MS 3367-1	0.375	0.50	18

FIGURE 5. Tensile test fixture for Type IV plastic mounting bracket.

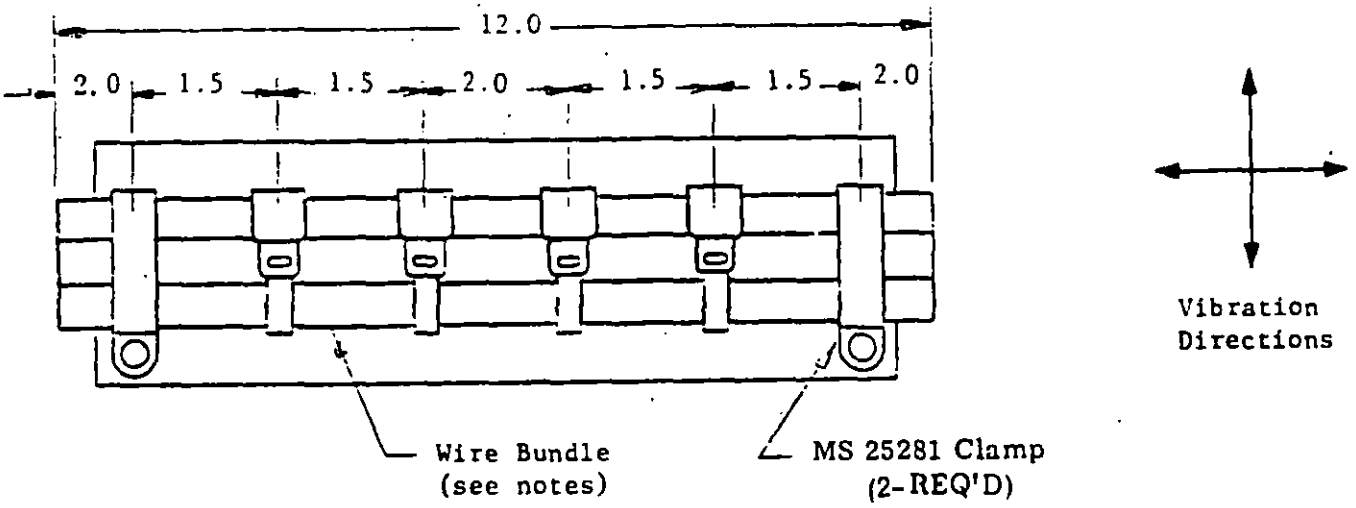

DIMENSIONS IN INCHES (APPROXIMATE)

NOTE 1

Plastic Straps

The wire bundle for plastic straps shall contain a minimum of three MIL-W-22759/16 wires (gauge sizes 12 thru 24).

NOTE 2

Metal Straps

The wire bundle for metal straps shall contain MIL-C-915 cable(s).

NOTE 3

Bundle Size

The bundle diameter shall be of sufficient size to permit the straps to slide over the required life cycle mandrels specified in the applicable figures 1 thru 6.

FIGURE 6. Vibration test fixture for straps.

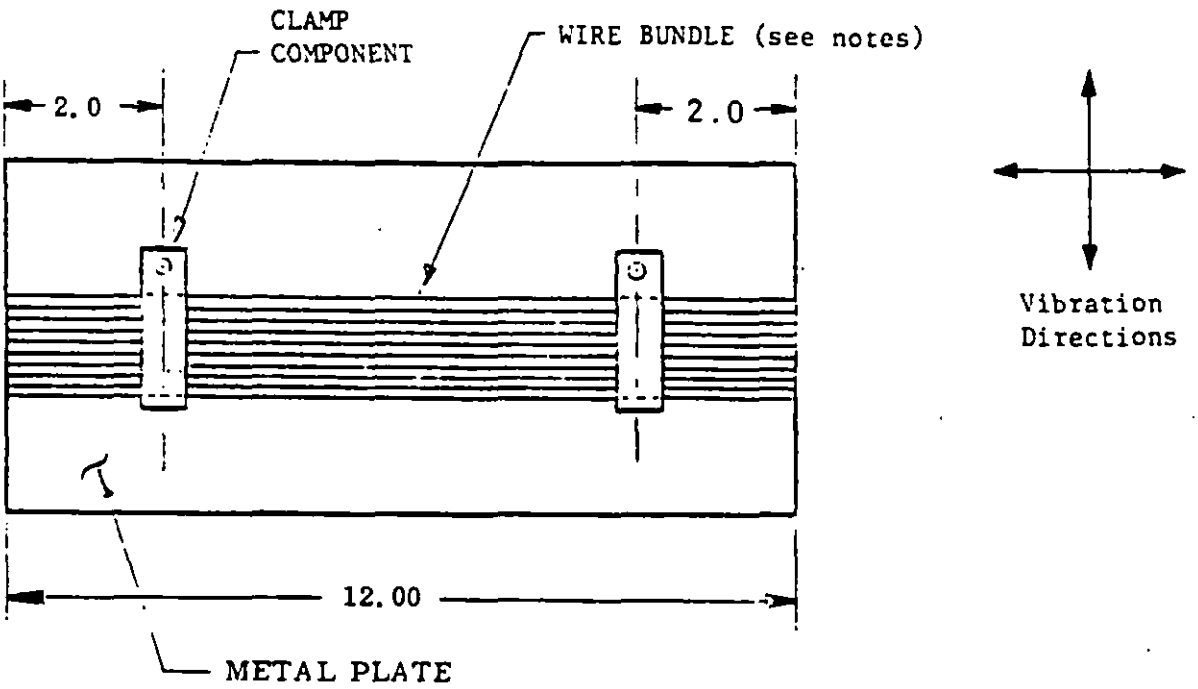

DIMENSIONS IN INCHES

NOTE 1

The wire bundle shall contain a minimum of three MIL-W-22759/16 wires (gauge sizes 12 thru 24). The bundle size shall be that specified in the applicable military standard (MS) or detail specification.

FIGURE 7. Vibration test fixture for clamps.

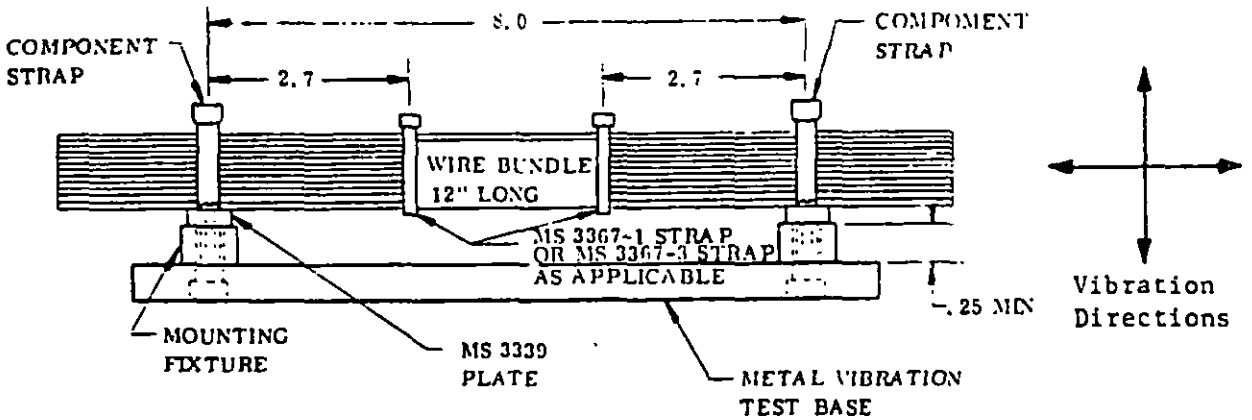

MOUNTING SCREWS SHALL BE ADJACENT TO THE BUNDLE STRAP OPENING BEING TESTED.

DIMENSIONS IN INCHES (APPROXIMATE)

Component	Component Strap Number	Wire Part Number	No. of Wires
MS 3339-1 thru -5	MS 3367-1	M5086/2-14	28
MS 3339-6 thru -11	MS 3367-3	M5086/2-14	50

FIGURE 8. Vibration test fixture for Type IV plastic mounting plate.

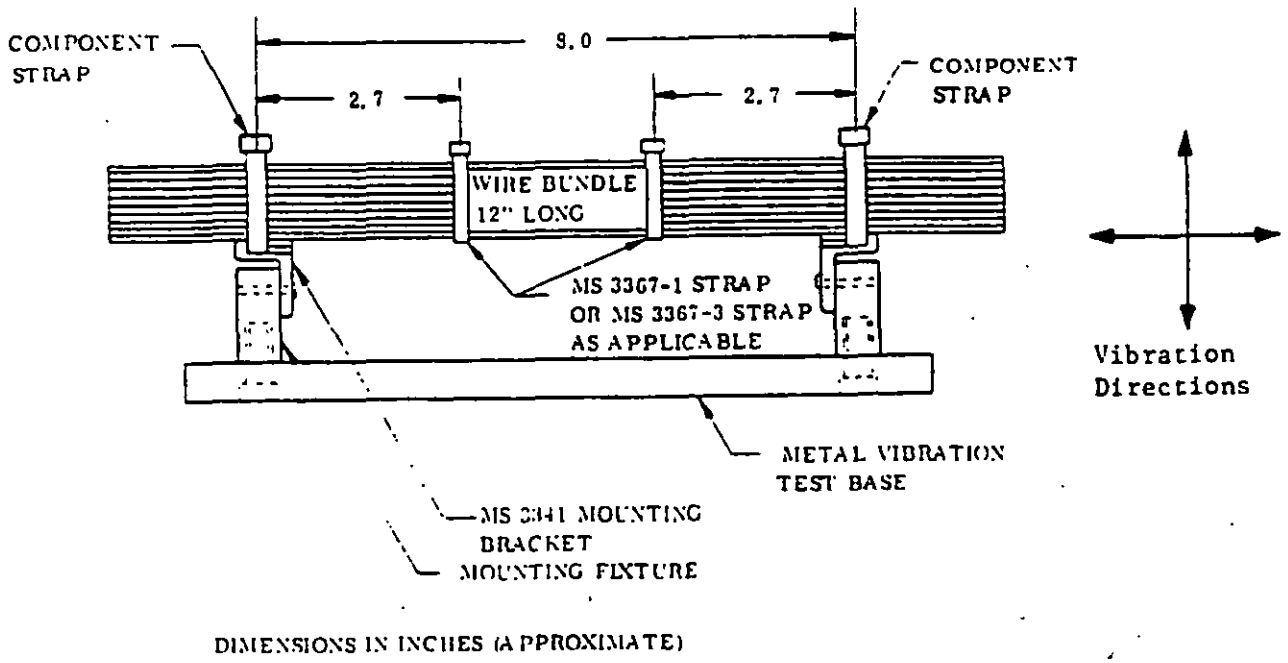

Component	Component Strap Number	Wire Part Number	No. of Wires
MS 3341-1	MS 3367-3	M5086/2-14	50
MS 3341-2	MS 3367-1	M5086/2-14	10

FIGURE 9. Vibration test fixture for Type IV plastic mounting bracket.

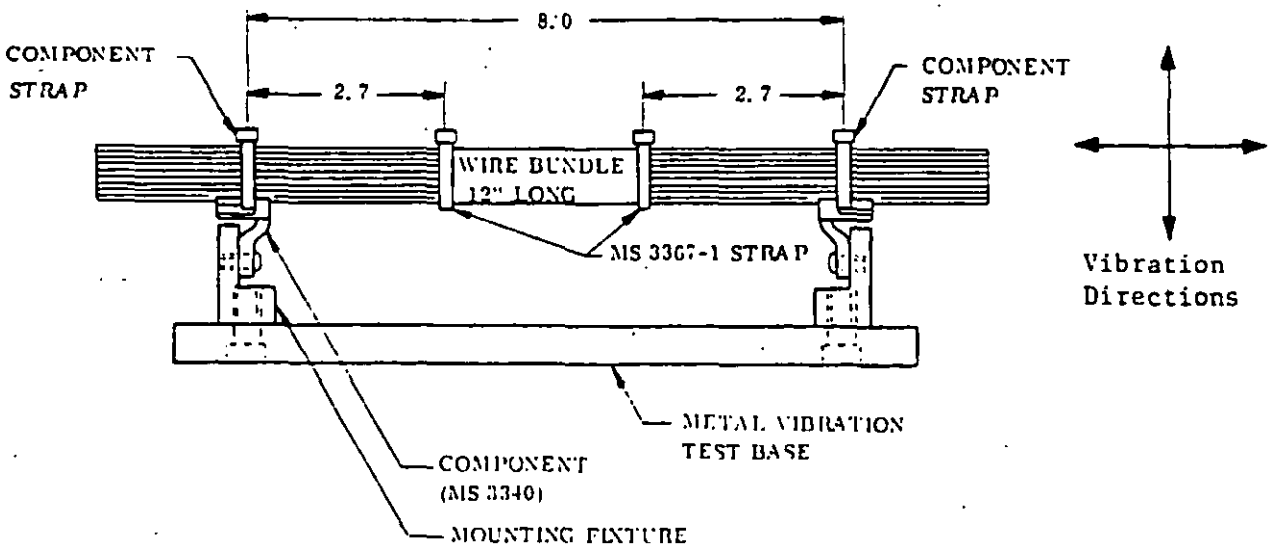

DIMENSIONS IN INCHES (APPROXIMATE)

Component	Component Strap Number	Wire Part Number	No. of Wires
MS 3340-1	MS 3367-1	M5086/2-14	28

FIGURE 10. Vibration test fixture for Type IV bulkhead bracket.

INSTRUCTIONS: In a continuing effort to make our standardization documents better, the DoD provides this form for use in submitting comments and suggestions for improvements. All users of military standardization documents are invited to provide suggestions. This form may be detached, folded along the lines indicated, taped along the loose edge *(DO NOT STAPLE)*, and mailed. In block 5, be as specific as possible about particular problem areas such as wording which required interpretation, was too rigid, restrictive, loose, ambiguous, or was incompatible, and give proposed wording changes which would alleviate the problems. Enter in block 6 any remarks not related to a specific paragraph of the document. If block 7 is filled out, an acknowledgement will be mailed to you within 30 days to let you know that your comments were received and are being considered.

NOTE This form may not be used to request copies of documents, nor to request waivers, deviations, or clarification of specification requirements on current contracts. Comments submitted on this form do not constitute or imply authorization to waive any portion of the referenced document(s) or to amend contractual requirements.

---

fold along this line

fold along this line

DEPARTMENT OF THE NAVY
Commanding Officer
Naval Air Engineering Center
Systems Engineering & Standardization Department
(SESD), Code 93
Lakehurst, NJ 08733

OFFICIAL BUSINESS
PENALTY FOR PRIVATE USE $300

NO POSTAGE NECESSARY IF MAILED IN THE UNITED STATES

BUSINESS REPLY MAIL

POSTAGE WILL BE PAID BY THE DEPARTMENT OF THE NAVY

Commanding Officer
Naval Air Engineering Center
Systems Engineering & Standardization Department
(SESD), Code 93
Lakehurst, NJ 08733

STANDARDIZATION DOCUMENT IMPROVEMENT PROPOSAL

(See Instructions - Reverse Side)

1. DOCUMENT NUMBER
MIL-S-23190E

2. DOCUMENT TITLE Straps, Clamps, and Mounting Hardware, Plastic and Metal, For Cable Harness Tying and Support

3a. NAME OF SUBMITTING ORGANIZATION

4. TYPE OF ORGANIZATION *(Mark one)*

- ☐ VENDOR
- ☐ USER
- ☐ MANUFACTURER
- ☐ OTHER *(Specify)*: _____

b. ADDRESS *(Street, City, State, ZIP Code)*

5. PROBLEM AREAS

a. Paragraph Number and Wording

b. Recommended Wording

c. Reason/Rationale for Recommendation

6. REMARKS

7a. NAME OF SUBMITTER *(Last, First, MI)* - Optional

b. WORK TELEPHONE NUMBER *(Include Area Code)* - Optional

c. MAILING ADDRESS *(Street, City, State, ZIP Code)* - Optional

8. DATE OF SUBMISSION *(YYMMDD)*

(TO DETACH THIS FORM, CUT ALONG THIS LINE.)

DD FORM 1426

PREVIOUS EDITION IS OBSOLETE