MIL-S-20708E
30 June 1987
SUPERSEDING
MIL-S-20708D
1 August 1978

MILITARY SPECIFICATION

SYNCHROS, GENERAL SPECIFICATION FOR

This specification is approved for use by all Departments and Agencies of the Department of Defense.

1. SCOPE

1.1 Scope. This specification relates to Synchros, 60 and 400 Hz. It is not complete in itself, but shall be used in conjunction with MIL-S-81963 in which the latter shall be recognized as forming an inherent part of this specification.

1.2 Classification.

1.2.1 Nomenclature. The nomenclature shall consist of the item name, followed by a type designation including a modification letter and a military part number. All synchros having the same design nomenclature shall be physically, mechanically, and electrically interchangeable for all military applications. The type designation shall be indicated by a combination of digits and letters. The type designation of 26-volt synchros shall be preceded by "26V". The complete nomenclature of a size 15, 115-volt, 400-Hz Synchro Transmitter is illustrated in Table I. Nomenclature for new synchro types will be assigned by the Naval Air Systems Command, Department of the Navy.

1.2.1.1 Item name - (see 6.5.1). The item name shall be one of the following, as applicable:

Synchro Transmitter
Synchro Receiver
Synchro Differential Transmitter
Synchro Differential Receiver
Synchro Control Transformer
Synchro Receiver Transmitter

However, on small synchros where space is insufficient for the full item name, the words "Differential" and "Control" may be omitted.

AMSC - N/A FSC 5990

1.2.1.2 Size. The first two digits shall designate the maximum diameter in tenths of an inch. If the diameter is not exactly a whole number of tenths, the next higher tenth shall be used.

1.2.1.3 Function. The succeeding group of letters shall indicate the function in accordance with the following:

First Letter	Function
C	Control
T	Torque

Succeeding Letters	Function
D	Differential
R	Receiver
T	Transformer
X	Transmitter
B	Rotatable Stator

When two synchros are enclosed within the same housing, the nomenclature shall indicate both units; e.g., 37TR-TR6A.

1.2.1.4 Supply frequency. The succeeding digit shall indicate the frequency of the power in accordance with the following:

Supply Frequency (Hz)	Code
60	6
400	4

1.2.1.5 Design modification. An upper case letter "A" following the frequency digit shall indicate the original or basic design of a standard synchro type. The first modification that affects the external mechanical dimensions or the electrical characteristics of the basic type shall be indicated by the upper case letter "B". Succeeding design modifications shall be indicated by "C", "D", etc., except "I", "L", "O", and "Q" shall not be used.

1.2.1.6 Military part number. The military part number shall consist of the letter "M", the basic number of the specification sheet (not including the revision letter), an assigned dash number and a suffix letter designating the latest modification letter in the type designation, as shown in the following example:

M	20708/14	-01	D
Military Designator	Specification Sheet Number	Dash Number	Latest Modification Letter

1.3 Illustration. A synchro classified as 15CX4D - M20708/14-01D (see Table I) indicates the third modification to the original design of a 115-volt, 400-Hz synchro control transmitter whose body diameter is greater than 1.40 inches but not greater than 1.50 inches, and the military part number specifies that this synchro has a splined shaft and terminal connections. A 26-volt synchro classified as 26V-11TX4C - M20708/6-01C indicates the second modification to the original design of a 26-volt, 400-Hz synchro torque transmitter whose body diameter is greater than 1.00 inch but not greater than 1.10 inches, and the military part number specifies that this synchro has a splined shaft and terminal connections.

2. APPLICABLE DOCUMENTS

2.1 Government documents.

2.1.1 Specifications and standards. The following specifications and standards form a part of this specification to the extent specified herein. Unless otherwise specified, the issues of these documents shall be those listed in the issue of the Department of Defense Index of Specifications and Standards (DODISS) and supplement thereto, cited in the solicitation.

SPECIFICATIONS

MILITARY

MIL-S-81963	Servocomponents, Precision Instrument, Rotating, Common Requirements and Tests: General Specification for

(See Supplement 1 of MIL-S-20708E for list of applicable specification sheets.)

STANDARDS

MILITARY

MIL-STD-105	Sampling Procedures and Tables for Inspection by Attributes
MIL-STD-202	Test Methods for Electronic and Electrical Component Parts
MS17183	Clamp Assembly (Synchro)
MS17186	Washer, Drive (Synchro)
MS17187	Nut, Plain, Hexagon
MS35275	Screw, Machine-Drilled Fillister Head, Slotted, Corrosion-Resisting Steel, Passivated, UNC-2A
MS35276	Screw, Machine-Drilled Fillister Head, Slotted, Corrosion-Resisting Steel, Passivated, UNF-2A

STANDARDS

MILITARY

MS35338	Washer, Lock-Spring, Helical, Regular (Medium) Series
MS90406	Gage, Ring, Spline (Go-No Go)

2.1.2 Other Government drawing. The following other Government drawing forms a part of this specification to the extent specified herein. Unless otherwise specified, the issue shall be the one in effect on the date of the solicitation.

Bureau of Ordnance

929471	(Spline) Go Composite Ring Gage

(Copies of specifications, standards, and drawings required by contractors in connection with specific acquisition functions should be obtained from the contracting activity or as directed by the contracting officer.)

2.2 Order of precedence. In the event of a conflict between the text of this specification and the references cited herein (except for associated detail specifications, specification sheets or MS standards), the text of this specification shall take precedence. Nothing in this specification, however, shall supersede applicable laws and regulations unless a specific exemption has been obtained.

3. REQUIREMENTS

3.1 Specification sheets. The individual item requirements shall be as specified herein, MIL-S-81963, and in accordance with the applicable specification sheets. In the event of any conflict between requirements of MIL-S-81963, this specification, and the specification sheet, the latter shall govern.

3.2 Qualification. Synchros furnished under this specification shall be products which are authorized by the qualifying activity for listing on the applicable qualified products list at the time set for opening of bids (see 4.5 and 6.4).

3.3 First article. When specified in the contract or purchase order, a sample shall be subjected to first article inspection (see 4.6 and 6.3).

3.4 Design conventions.

3.4.1 Direction of rotation. The standard (positive) direction of rotation of the shaft is counterclockwise when the synchro is viewed from the shaft extension end.

3.4.2 Electrical angle.

3.4.2.1 Transmitters and receivers. The electrical angle "a" is the angle, displaced in a positive direction from synchro zero, which satisfies the relative magnitude and polarities of the secondary voltages of an ideal synchro transmitter or receiver in accordance with the following equations:

$$E(S1S3) = N\ E(R2R1) \sin a$$
$$E(S3S2) = N\ E(R2R1) \sin a\ (a + 120^{o})$$
$$E(S2S1) = N\ E(R2R1) \sin a\ (a + 240^{o})$$

Where:

The terminal sequence as indicated in the parentheses designates the sense of the voltage vector.

N is the transformation ratio.

E(R2R1) is the voltage between terminals R2 and R1.

E(S1S3) is the voltage between terminals S1 and S3.

The in-time-phase secondary voltages are obtained as described in 6.6.8; other voltages are similarly defined.

3.4.2.2 Differential transmitters and differential receivers. The electrical angle "a" is the angle, displaced in a positive direction from synchro zero, which satisfies the relative magnitude and polarities of an ideal synchro differential transmitter or differential receiver in accordance with the following equations:

$$E(R1R3) = N\ (E(S1S3) \sin (a + 120^{o}) - E(S3S2) \sin a)$$
$$E(R3R2) = N\ (E(S1S3) \sin a - E(S3S2) \sin (a + 240^{o}))$$
$$E(R2R1) = N\ (E(S1S3) \sin (a + 240^{o}) - E(S3S2) \sin (a + 120^{o}))$$
$$E(S1S3) + E(S3S2) + E(S2S1) = 0$$

Where:

The terminal sequence as indicated in the parentheses designates the sense of the voltage vector.

N is the transformation ratio.

E(R1R2) is the voltage between terminals R1 and R2.

E(S1S3) is the voltage between terminals S1 and S3.

The in-time-phase secondary voltages are obtained as described in 6.6.8; other voltages are similarly defined.

3.4.2.3 Control transformers. The electrical angle "a" is the angle displaced in a positive direction from synchro zero, which satisfies the relative magnitude and polarities of the secondary voltages of an ideal synchro control transformer in accordance with the following equations:

$$E(R1R2) = N\ (E(S1S3) \sin (a + 120^{o}) - E\ (E(S3S2) \sin a))$$
$$E(S1S3) + E(S3S2) + E(S2S1) = 0$$

Where:

The terminal sequence as indicated in the parentheses designates the sense of the voltage vector.

N is the transformation ratio.

E(R1R2) is the voltage between terminals R1 and R2.

E(S1S3) is the voltage between terminals S1 and S3.

The in-time-phase secondary voltages are obtained as described in 6.6.8; other voltages are similarly defined.

3.4.3 Synchro zero. Synchro zero is that position of the rotor with respect to the stator at which minimum voltage is induced in the secondary circuit specified, and at which the secondary voltage(s) specified is in-time-phase (see 6.6.8) with the primary voltage specified (see 4.3.4). The order in time of maximum voltages in the stator terminals is in the order S1, S2, S3, when the rotor is turned in a positive direction (see 3.4.1). The minimum voltage position with the secondary unloaded is defined as the angular position where the secondary voltage of fundamental frequency that is in-time-phase with the secondary voltage at maximum coupling is zero. The phase-sensitive voltmeters in Figures 1, 2, and 3 shall be the type as described in 4.8.12.

3.4.3.1 Transmitters and receivers. Synchro zero of transmitters and receivers shall be determined with the synchro connected in accordance with Figure 1. When the synchro shaft is rotated in the positive direction (not to exceed 180°) from synchro zero, the voltage E(S1S3) shall be in approximate time phase with E(R2R1).

3.4.3.2 Differential transmitters and differential receivers. Synchro zero of differential transmitters and differential receivers shall be determined with the synchro connected in accordance with Figure 2. When the synchro shaft is rotated in the positive direction (not to exceed 180°) from synchro zero, the voltage E(R3R1) shall be in approximate time phase with E(S3S2).

3.4.3.3 Control transformers. Synchro zero of control transformers shall be determined with the synchro connected in accordance with Figure 3. When the synchro shaft is rotated in the positive direction (not to exceed 180°) from synchro zero, the voltage E(R2R1) shall be in approximate time phase with E(S3S2).

3.4.4 Spline shafts. The end function of the spline on synchros with splined shafts is as a rotational positive fastening. These splines are not to be used as gears. The tooth form shall be full depth involute on all splines. Splines for size 11, 15, or 18 synchros shall be inspected by (Spline) Go Composite Ring Gage MS90406-1. Splines for size 23, 31, or 37 synchros shall be inspected by (Spline) Go Composite Ring Gage Buord 929471.

3.5 Design and construction.

3.5.1 Termination identification. Winding terminations shall be as specified in MIL-S-81963. Identification of terminal screw, solder pin or wire lead types shall be as specified in Table II herein.

3.5.2 Synchro zero markings. The synchro zero markings shall be checked in accordance with 4.8.24 and shall meet the requirements specified in MIL-S-81963.

3.5.3. Dimensions. Outline drawings for the different sizes of synchros are included as Figures 4, 5, 6, 7, 8, and 9. Lettered dimensions shown on the outline drawings are provided in Table III.

3.6 Performance.

3.6.1 Visual and mechanical inspection. Visual and mechanical inspection shall be performed in accordance with 4.8.1 and shall meet the requirements of MIL-S-81963.

3.6.2 Variation of brush contact resistance. Brush contact resistance test shall be conducted in accordance with 4.8.2. This test shall be the first test performed and shall also be the first test performed after environmental tests as indicated in Table IV. The variation in resistance shall be as specified in MIL-S-81963.

3.6.3 Shaft radial and end play (see 6.6.11). Shaft radial and end play shall be tested in accordance with 4.8.3 and shall meet the requirements specified in MIL-S-81963.

3.6.4 Shaft runout. When tested in accordance with 4.8.4, shaft runout shall not exceed the value specified in the specification sheet.

3.6.5 Mechanical breakaway torque (see 6.6.12). When tested in accordance with 4.8.5, mechanical breakaway torque shall meet the requirements specified in MIL-S-81963.

3.6.6 Torque gradient (see 6.6.13). When tested in accordance with 4.8.6, the torque gradient of torque synchros shall conform to the requirements in the applicable specification sheet.

3.6.7 Dielectric withstanding voltage. When tested in accordance with 4.8.7, the synchro shall meet the requirements of MIL-S-81963.

3.6.8 Insulation resistance. Insulation resistance measurements shall be performed in accordance with 4.8.8 and shall meet the requirements of MIL-S-81963.

3.6.9 Primary current. When tested in accordance with 4.8.9, the value of the current of each primary winding shall be as specified in MIL-S-81963.

3.6.10 Primary power. When tested in accordance with 4.8.10, the value of the power of each primary winding shall be as specified in MIL-S-81963.

3.6.11 Transformation ratio (see 6.6.9). When tested in accordance with 4.8.11, the value of transformation ratio shall be as specified in the specification sheet.

3.6.12 Phase shift (see 6.6.10). When tested in accordance with 4.8.12, the value of the phase shift shall be as specified in the specification sheet.

3.6.13 Electrical error (see 6.6.2). When tested in accordance with 4.8.13, the electrical error shall not exceed the value specified in the specification sheet.

3.6.14 Residual (null) voltage (see 6.6.14). When tested in accordance with 4.8.14, the null voltage shall not exceed the value specified in the specification sheet.

3.6.15 Receiver error (see 6.6.3). When tested in accordance with 4.8.15, the maximum error shall not exceed the value specified in the specification sheet.

3.6.16 Spinning. When tested in accordance with 4.8.16, the rotor of a receiver or differential receiver shall synchronize or come to rest from any initial angular position without spinning.

3.6.17 Synchronizing time (see 6.6.4). When tested in accordance with 4.8.17, the synchronizing time shall not exceed the value specified in the specification sheet.

3.6.18 Security of terminals or wire leads. The security of each screw type or solder pin type of terminal or of each wire lead, as applicable to the particular type of synchro, shall be tested in accordance with 4.8.18 and shall meet the requirements of MIL-S-81963.

3.6.19 Impedance (see 6.6.5). When measured in accordance with 4.8.19, the impedance values shall be as specified in the specification sheet.

3.6.20 Temperature rise (see 6.6.16). When measured in accordance with 4.8.20, temperature rise shall be as specified in MIL-S-81963.

3.6.21 Variation of voltage and frequency. Synchros shall be capable of operating satisfactorily from power sources subject to a ±10 percent voltage regulation in combination with frequency variation of ±5 percent. When tested in accordance with 4.8.21, the power drawn from the source shall not exceed that specified by the specification sheet.

3.6.22 Audible noise, structureborne. When required by the applicable specification sheet, structureborne noise shall be tested in accordance with 4.8.22 and shall meet the requirements of MIL-S-81963.

3.6.23 Electromagnetic interference. When required by the applicable specification sheet, electromagnetic interference shall be tested in accordance with 4.8.23 and shall meet the requirements of MIL-S-81963.

3.7 Environmental.

3.7.1 Vibration. Vibration shall be conducted in accordance with 4.9.1. After vibration the synchros shall meet the requirements of MIL-S-81963 and Table IV herein.

3.7.2 Shock.

3.7.2.1 Shock, specified pulse. Shock shall be conducted in accordance with 4.9.2.1. After shock, synchros shall meet the requirements of MIL-S-81963 and Table IV herein.

3.7.2.2 Shock, high impact. Shock shall be conducted in accordance with 4.9.2.2. After shock, synchros shall meet the requirements of MIL-S-81963 and Table IV herein.

3.7.3 Altitude. During altitude testing, synchros shall be capable of operation from the low temperature specified in MIL-S-81963 to 125°C. Synchros size 23 and smaller shall meet the requirements of Table IV.

3.7.3.1 Altitude, low temperature. Altitude, low temperature, shall be conducted in accordance with 4.9.3.1 and shall meet the requirements of Table IV.

3.7.3.2 Altitude, high temperature. Altitude, high temperature, shall be conducted in accordance with 4.9.3.2 and shall meet the requirements of Table IV.

3.7.4 Endurance. Endurance shall be conducted in accordance with 4.9.4. After testing, the synchros shall meet the requirements of Table IV.

3.7.5 Ambient temperature.

3.7.5.1 Ambient low temperature. The synchro shall be tested in accordance with 4.9.5.1 and shall meet the requirements of Table IV.

3.7.5.2 Ambient high temperature. The synchro shall be tested in accordance with 4.9.5.2 and shall meet the requirements of Table IV.

3.7.6 Moisture resistance. Synchros shall be tested in accordance with 4.9.6. After testing in accordance with 4.9.6, synchros shall meet the requirements of Table IV.

3.7.7 Explosion resistance. When required by the applicable specification sheet, synchros shall be tested in accordance with 4.9.7 and shall meet the requirements of MIL-S-81963.

3.7.8 Salt atmosphere. When required by the applicable specification sheet, synchros shall be tested in accordance with 4.9.8 and shall meet the requirements of MIL-S-81963.

3.7.9 Identification marking. Identification markings shall be as specified in MIL-S-81963.

3.7.10 Workmanship. Workmanship of the synchro shall conform to the requirements of MIL-S-81963.

4. QUALITY ASSURANCE PROVISIONS

4.1 Responsibility for inspection. Responsibility for inspection shall be as specified in MIL-S-81963.

4.2 General. Unless otherwise specified herein or in the applicable specification sheet, all testing shall be conducted in accordance with MIL-S-81963.

4.2.1 Test equipment and inspection facilities. The accuracy of test equipment and inspection facilities shall conform to MIL-S-81963.

4.2.2 Alternate test methods. Alternate test methods shall conform to MIL-S-81963.

4.3 Test conditions.

4.3.1 Standard test conditions. Unless otherwise specified, the standard test conditions shall be as specified in MIL-S-81963, and each test shall be carried out with the synchro in the applicable mounting fixture in accordance with MIL-S-81963. Mounting hardware shall conform to the requirements of Table V.

4.3.2 Temperature, stabilized operating. The stabilized operating temperature of the synchro shall be as specified in MIL-S-81963, using the applicable secondary windings stipulated in Table VI herein for the periodic dc resistance measurement.

4.3.3 Temperature, stabilized non-operating. The stabilized non-operating temperature of the synchro shall be as specified in MIL-S-81963 using the applicable secondary windings stipulated in Table VI herein for the periodic dc resistance measurement.

4.3.4 Standard test voltage and frequency. Unless otherwise specified, the test voltage and frequency of a true sine wave shall be as specified in Table VI. The voltage and frequency shall be maintained within a tolerance of ± 1 percent. The total harmonic content shall be less than 1 percent.

4.4 Classification of tests. The methods of sampling, inspection, and tests conducted on synchros shall be classified as follows:

a. Qualification (4.5)

b. First Article (4.6)

c. Quality Conformance (4.7)

4.5 Qualification inspection. Qualification inspection shall be performed at a laboratory approved by the Naval Air Systems Command and shall be performed in accordance with MIL-S-81963 and Table IV herein.

4.5.1 Qualification sample. The qualification sample shall be as specified in MIL-S-81963.

4.5.2 Qualification inspection routine. The qualification inspection routine shall be performed in accordance with MIL-S-81963 and Table IV herein.

4.5.3 Assessment of qualification approval test results.

4.5.3.1 Qualification sample failure. Qualification sample failure shall be as specified in MIL-S-81963.

4.5.3.2 Degradation of performance. The following relaxations may be permitted at the discretion of the qualifying activity in accordance with MIL-S-81963.

4.5.3.2.1 Acceptance tests. All the specified performance characteristics must be attained.

4.5.3.2.2 Environmental tests. As appropriate during or following each of the environmental tests, the following minor relaxations in specified requirements may be permitted. It should be noted that the relaxations are not cumulative; e.g., electrical error, if accepted at up to 1 minute of arc in addition to the specified maximum value following vibration, shall still not be more than 1 minute of arc in addition to the specified maximum value following low impact shock.

4.5.3.2.2.1 Variation of brush contact resistance. A maximum variation of 1.5 ohms or 0.75 percent of rotor dc resistance specified in the specification sheet may be permitted. Following high impact shock, a maximum variation of 2.25 ohms or 1.125 percent of rotor dc resistance specified in the specification sheet is permissible.

4.5.3.2.2.2 Receiver error. An increase of 6 minutes for sizes 11 and 15, 5 minutes for sizes 18 and 23, and 4 minutes for sizes 31 and 37, in addition to the maximum receiver error value specified in the specification sheet, is permissible. Following high impact shock, an increase to 1 1/2 times the maximum receiver error value specified in the specification sheet is permissible.

4.5.3.2.2.3 Electrical error. An increase of 1 minute in addition to the maximum electrical error value specified in the specification sheet may be permitted. Following high impact shock, an increase to 1 1/2 times the maximum electrical error value specified in the specification sheet is permissible.

4.5.3.2.2.4 Mechanical breakaway torque. An increase to 2 times the maximum breakaway torque value specified in the specification sheet at standard test temperature may be permitted. Following high impact shock, an increase to 3 times the maximum breakaway torque value specified in the specification sheet at standard test temperature is permissible.

4.5.3.2.2.5 Shaft radial play. The maximum permissible radial play is 1 1/2 times the maximum value specified in the specification sheet. Following high impact shock, radial play not exceeding 2 1/4 times the maximum value specified in the specification sheet is permissible.

4.5.3.2.2.6 Shaft end play. Irrespective of the limits specified in the specification sheet, a minimum end play value of 0.0001 inch is required. The maximum permissible end play is 1 2/3 times the maximum value specified in the specification sheet. Following high impact shock, end play not exceeding 2 1/2 times the maximum value specified in the specification sheet is permissible.

4.5.3.2.2.7 Residual voltage. Following high impact shock, an increase of 50 percent in the maximum fundamental and total residual voltage values specified in the specification sheet is permissible.

4.5.3.2.2.8 Dielectric withstanding voltage. Following high impact shock, a winding leakage current increase to 1.5 milliamperes peak maximum is permissible.

4.5.3.2.2.9 Insulation resistance. Following high impact shock and having been immediately preceded by dielectric withstanding voltage, a reduction to 25 megohms insulation resistance is permissible.

4.5.3.2.2.10 Major failures during or following environmental tests. Allowances having been made for the relaxations quoted in 4.5.3.2.2, failures experienced during or following environmental tests shall be dealt with as provided for in MIL-S-81963.

4.5.3.3 Qualification sample isolated failure. In case of catastrophic failure, the procedures of MIL-S-81963 shall apply.

4.5.3.4 Qualification approval by analogy. Qualification approval by analogy shall be as specified in Figure 10 herein and MIL-S-81963.

4.5.3.4.1 Rules for selection. Test samples shall be selected in accordance with 4.5.3.4.1.1 through 4.5.3.4.1.3 as depicted in Figure 10.

4.5.3.4.1.1 From a group of units submitted for qualification approval by analogy testing, the test samples shall be selected by successively dividing the group in the following sequence:

a. Frame Size

b. Voltage: 26V or 115V

c. Frequency: 60 Hz or 400 Hz

d. Synchro Function: Control or Torque

Having made the subdivision as above, the units shall then be grouped together with no more than three types comprising any one group.

4.5.3.4.1.2 From each group, four units shall be selected for the entire qualification approval test program. When there are only two types in a group, two of each shall be selected; but in the case of three types in a group, two shall be selected from the differential type and one each from the other two.

4.5.3.4.1.3 The sample group of units having been selected shall then be subjected to the qualification tests.

4.5.4 Disposition of qualification sample. Disposition of the qualification sample shall be as specified in MIL-S-81963.

4.5.5 Requalification. The frequency of qualification inspection in order to retain qualification approval shall be as specified in MIL-S-81963.

4.5.6 Changes. After samples have been submitted for qualification, no change shall be made in the materials, design, or manufacturing processes without prior approval of the qualifying activity.

4.6 First article sample inspection. When required by the contracting activity, first article shall be as specified in MIL-S-81963.

4.6.1 First article sample failure. Action following first article sample failure shall be as specified in MIL-S-81963.

4.7 Quality conformance inspection. Quality conformance inspection shall be as specified in MIL-S-81963 and Table IV herein.

4.7.1 Quality conformance inspection sampling. Statistical sampling and inspection shall be as specified in MIL-S-81963. When MIL-STD-105 specifies an action by the Government, it shall, at the option of the Government, be performed either by the Government or by the contractor under the supervision of the Government.

4.7.2 Quality conformance inspection routine. The minimum of inspection to be verified by the Government Inspector shall be the requirements of MIL-S-81963 and Table IV herein. The Government Inspector may substitute 100 percent inspection for all or part of the sampling procedure.

4.7.3 Quality conformance sample failure. Action following quality conformance sample failure shall be as specified in MIL-S-81963.

4.8 Test methods and examinations.

4.8.1 Visual and mechanical examination. The synchro shall be examined in accordance with MIL-S-81963 and shall meet the requirements of 3.6.1.

4.8.2 Variation of brush contact resistance. Brush contact resistance test shall be conducted in accordance with MIL-S-81963 and shall be performed between terminals R1-R2 of transmitters, receivers, and control transmitters; between terminals R1-R2 and R1-R3 of differential transmitters and differential receivers; and between S1-S2 and S1-S3 of rotatable stator synchros, and shall meet the requirements of 3.6.2.

4.8.3 Shaft radial and end play. Shaft radial and end play shall be tested in accordance with MIL-S-81963 and shall meet the requirements of 3.6.3.

4.8.4 Shaft runout. The synchro housing shall be rigidly mounted. A dial gauge shall be applied to the shaft within 1/8 inch of the bearing face and the shaft rotated. The difference between the extreme indicator readings shall be the shaft runout and shall meet the requirements of 3.6.4.

4.8.5 Mechanical breakaway torque. Mechanical breakaway torque test shall be conducted in accordance with MIL-S-81963 and shall meet the requirements of 3.6.5.

4.8.6 Torque gradient test.

4.8.6.1 General. The synchro shall be energized in accordance with 4.3.4 until it reaches stabilized operating temperature (see 4.3.2). Torque shall be applied by weights suspended from a thread attached to the rim of a torque pulley rigidly mounted on the synchro shaft. The thread diameter shall be less than 0.01 times that of the pulley. A measuring device which will enable changes in angular position of the synchro shaft to be read within 15 minutes of arc shall be attached to the fixture. Predetermined weights of equal increments shall be applied to cause deflections of approximately 2, 4, 6, 8, and 10 degrees in both clockwise and counterclockwise directions. The corresponding deflections shall be recorded and a torque-deflection curve plotted as the straight line best fitted to the observed points, and shall meet the requirements of 3.6.6.

4.8.6.1.2 Torque transmitters and receivers.

4.8.6.1.2.1 Method 1. Torque transmitters and receivers shall be energized by applying voltage and frequency as specified in 4.3.4 to the R1-R2 terminals of the synchro. The stators of rotatable stator synchros shall be locked at synchro zero. Terminals S1 and S3 shall be connected together and the synchro tested in accordance with 4.8.6.1. The torque gradient shall be one-half the slope of the line expressed in ounce-inches per degree.

4.8.6.1.2.2 Method 2. Torque transmitters and receivers shall be electrically coupled to another transmitter of the same frame size and nominal impedance and energized by applying a voltage and frequency as specified in 4.3.4 to the R1 and R2 terminals of the synchros and tested in accordance with 4.8.6.1. The stators of rotatable synchros shall be locked at synchro zero. The torque gradient is the slope of the line expressed in ounce-inches per degree.

4.8.6.1.3 Torque differential transmitters and receivers.

4.8.6.1.3.1 Method 1. Torque differential transmitters and receivers shall be energized by applying the voltage and frequency as specified in 4.3.4 between terminal S1, which is connected to S3, and terminal S2. Terminals R1 and R3 shall be connected together and the synchro shall be tested in accordance with 4.8.6.1. The torque gradient shall be one-half the slope of the line expressed in ounce-inches per degree.

4.8.6.1.3.2 Method 2. Torque differential transmitters and receivers shall be energized by applying the voltage and frequency as specified in 4.3.4 between terminal S1, which is connected to S3, and terminal S2. The rotor terminals shall be connected to a torque transmitter's stator. The transmitter shall be the same frame size and frequency rating as the synchro under test and shall be locked on synchro zero and tested in accordance with 4.8.6.1. The torque gradient is the slope of the line expressed in ounce-inches per degree.

4.8.7 Dielectric withstanding voltage. The dielectric withstanding voltage test shall be conducted as specified in MIL-S-81963 and Table VII herein and shall meet the requirements of 3.6.7.

4.8.8 Insulation resistance. The insulation resistance between the application points stipulated in Table VII shall be measured as specified in MIL-S-81963 and shall meet the requirements of 3.6.8 herein. For synchros with maximum operating voltages greater than 50 volts rms, 500 volts dc shall be applied between all points. For synchros with maximum operating voltages less than 50 volts rms, 100 volts dc shall be applied between all application points.

4.8.9 Primary current. Current drawn by the primary winding shall be measured with the secondary winding open-circuited, the synchro energized in accordance with 4.3.4, and as specified in MIL-S-81963. The current drawn shall meet the requirements of 3.6.9.

4.8.10 Primary power. Power drawn by the primary winding shall be measured with the secondary winding open-circuited, the synchro energized in accordance with 4.3.4, and as specified in MIL-S-81963. The power consumed shall meet the requirements of 3.6.10.

4.8.11 Transformation ratio test. The synchro shall be energized and stabilized in accordance with 4.3.4 and 4.3.2, then the rotor turned in the positive direction from synchro zero until the first position of maximum coupling is reached. The secondary shall be connected to a measuring device which indicates or compares the rms voltage of the fundamental frequency and does not alter the open circuit secondary voltage by more than 0.1 percent. The transformation ratio shall meet the requirements of 3.6.11.

4.8.12 Phase shift test. Phase shift shall be measured with the synchro energized, stabilized, in accordance with 4.3.4 and 4.3.2 and rotor positioned as in 4.8.11 above. The secondary shall be connected to a measuring device which indicates or compares the phase shift to an accuracy of ±15 minutes and does not alter the open circuit voltages by more than 0.1 percent. The phase shift shall meet the requirements of 3.6.12.

4.8.13 Electrical error test. The synchro shall be energized as specified in 4.3.4 and stabilized as specified in 4.3.2. The electrical error shall be measured and recorded at every 5-degree position of the rotor and shall meet the requirements of 3.6.13. The total combined error of the test equipment during testing shall not exceed 30 seconds of arc. The stators of rotatable stator synchros shall be locked at synchro zero. The electrical

error of both the rotor and stator shall be determined for differential transmitters and differential receivers. Examples of electrical error test setups for different types of units are shown in Figures 11 and 12.

4.8.14 Residual (null) voltage test. The synchro shall be energized as specified in Table VIII and the null readings made with the synchro at the electrical angles shown in Table VIII. The voltage-measuring devices used in 4.8.14.1 and 4.8.14.2 shall indicate the average value of the voltage wave in terms of the rms value of an equivalent sine wave and shall have an input impedance of at least 500,000 ohms resistance shunted by a capacitance of 30pF. The residual (null) voltage shall meet the requirements of 3.6.14.

4.8.14.1 Frequency sensitive voltmeter method. A frequency sensitive voltmeter shall be used which has a fundamental frequency filter with characteristics for a change of ±1 percent in energizing frequency. The output voltage shall change no more than ±0.5 percent and be at least -30 db at half and twice rated frequency. The meter shall be properly compensated for the insertion loss of the filter. The synchro rotor shall be turned until a minimum voltage is obtained on the frequency sensitive voltmeter. The voltage is the fundamental component of the null voltage. Without disturbing the rotor position, the total null voltage shall be measured.

4.8.14.2 Phase-sensitive voltmeter method. The synchro rotor shall be turned until the in-phase component of the null voltage is zero as indicated on a phase-sensitive voltmeter. The quadrature voltage shall be read. This voltage is the fundamental component of the null voltage. Without disturbing this rotor position, the total null voltage shall be measured.

4.8.15 Receiver error test.

4.8.15.1 General. The synchro under test shall be connected to a calibrated transmitter(s) of the same frame size and the same nominal impedance. The calibrated transmitter(s) and synchro under test shall then be rotated at 1 rpm. This calibrated transmitter(s) shall have met the acceptance requirements of this specification. The transmitter(s) and the synchro under test shall be energized in accordance with 4.3.4 and stabilized in accordance with 4.3.2. Stators of rotatable stator synchros shall be locked at synchro zero. If a low-pass filter is incorporated into the test equipment, it shall pass 10 Hz and below. The calibrated transmitter(s) and synchro under test shall be set at synchro zero with respect to the same reference. Receiver error shall be determined and recorded either continuously or at no greater than 5 degree intervals for both clockwise and counterclockwise compatible with the direction of rotation of both synchros. If the calibrated electrical error of the transmitter(s) exceeds 3 minutes, the receiver error shall be corrected. The receiver error shall meet the requirements of 3.6.15.

4.8.15.2 Receivers.

4.8.15.2.1 Method 1. The shaft of the torque transmitter shall be mechanically coupled to the shaft of a control transformer. The stators of the receiver under test, the torque transmitter, and the control transformer

shall be electrically connected and compatible to direction of rotation. A calibrated phase-sensitive nullmeter shall be placed across the output of the control transformer. The shaft of the control transformer shall be rotated and the receiver error interpreted from the calibrated phase-sensitive nullmeter when tested in accordance with 4.8.15.1.

4.8.15.2.2 Method 2. Stator terminals of the receiver and transmitter shall be connected. Both housings shall be locked rigidly together with respect to the same reference and the transmitter rotor secured at synchro zero. The synchros shall be tested in accordance with 4.8.15.1.

4.8.15.2.3 Method 3. Electrically connect a transmitter to an Angle Position Indicator (API) and record the digital output from the API with a data logger. While driving the transmitter at 1 rpm, record the readings at the rate of six per second for an interval of 70 seconds starting when the API reads 0.000 degrees. Repeat the process with the transmitter rotating in the opposite direction. A programmable synchro standard with the same nominal impedance as the synchro under test may be substituted for the transmitter, eliminating the need for the previous readings. Electrically connect the synchro under test to the transmitter and the API. Mechanically displace the shaft of the synchro under test 1 degree from the transmitter to determine the scale factor. The scale factor is a number, that when multiplied by the change in the API reading, equals 1 degree. Obtain another set of data by repeating the previous readings while the synchro under test is connected to the transmitter. The receiver error is the scale factor times the difference in the two sets of data.

4.8.15.3 Differentials.

4.8.15.3.1 Method 1. The shaft of the torque transmitter shall be mechanically coupled to the shaft of a transformer. The stators of the torque transmitter and control transformer shall be electrically connected to the rotor of the differential receiver under test in such a manner as to maintain compatible direction of rotation. The stator of the differential receiver shall be connected to the stator of a second torque transmitter, the shaft of which is locked at synchro zero. A calibrated phase-sensitive nullmeter shall be placed across the output of the control transformer. The shaft of the control transformer shall be rotated and the receiver error interpreted with the calibrated phase-sensitive nullmeter when tested in accordance with 4.8.15.1.

4.8.15.3.2 Method 2. Terminals of the differential receiver rotor shall be connected to the stator of a transmitter, and the differential receiver stator terminals shall be connected to the stator of a second transmitter. Stator housings of the differential receiver and one transmitter shall be mechanically locked with respect to the same reference. Both transmitter shafts shall be locked at synchro zero to prevent rotation and the test shall be conducted in accordance with 4.8.15.1.

4.8.15.3.3 Method 3. This method is the same as 4.8.15.2.3 except the stator of the differential synchro is electrically connected to a second transmitter's stator with its shaft locked on synchro zero. The rotor is electrically connected to the driven transmitter's stator after the first set of readings are recorded and prior to testing the differential synchro.

4.8.16 Spinning test. The applicable test dial used for mechanical breakaway torque as specified in MIL-S-81963 shall be mounted rigidly on the shaft of the receiver or differential receiver. The synchro receiver shall be connected to the appropriate terminals of a torque transmitter, or in the case of a differential receiver, to two transmitters of a size 37 for 115-volt synchros or a size 11 for 26-volt synchros. The rotor(s) of the transmitter(s) shall be locked in the synchro zero position. The rotor of the synchro under test shall be displaced $177^{\circ}\pm2^{\circ}$ from synchro zero and the synchros energized with 120 percent of standard test voltage at rated frequency. This procedure shall be performed five times for a clockwise displacement and five times for a counterclockwise displacement and shall meet the requirements of 3.6.16.

4.8.17 Synchronizing time test. Terminals of the synchro under test shall be connected to the appropriate terminals of a torque transmitter(s) of the same size and the same nominal impedance as the synchro under test. The rotor(s) of the transmitter(s) shall be locked at synchro zero. The applicable test dial used for mechanical breakaway torque as specified in MIL-S-81963 shall be rigidly mounted on the shaft of the synchro under test. The synchro under test shall be displaced $30^{\circ}\pm2^{\circ}$ clockwise, energized in accordance with 4.3.4, and the time required to return to synchro zero and remain within 1 degree of zero shall be measured. The synchronizing time shall be the average of three successive tests. This test shall be repeated at a displacement of $30^{\circ}\pm2^{\circ}$ counterclockwise. The above test shall be repeated at displacements of $177^{\circ}\pm2^{\circ}$ clockwise and counterclockwise. The synchronizing time for any test position shall meet the requirements of 3.6.17.

4.8.18 Security of terminals and wire leads. The security of each screw type or solder pin type of terminal or of each wire lead shall be tested in accordance with MIL-S-81963 and shall meet the requirements of 3.6.18.

4.8.19 Impedance. The impedance of the synchro windings shall be measured in accordance with MIL-S-81963 when energized in accordance with 4.3.4 and Table IX herein. Impedance shall be determined at synchro zero and shall meet the requirements of 3.6.19.

4.8.20 Temperature rise. Temperature rise shall be conducted in accordance with MIL-S-81963 and shall meet the requirements of 3.6.20, using secondary windings for dc resistance measurements. Windings shall be energized as specified in 4.3.4.

4.8.21 Variation of voltage and frequency. The synchro shall be energized and stabilized in accordance with 4.3.2 and 4.3.4. The voltage shall then be adjusted to 110 percent of voltage specified in Table VI and the frequency adjusted to 95 percent of the value specified in Table VI. The power drawn from the energizing source shall meet the requirements of 3.6.21.

4.8.22 Audible noise, structureborne. Structureborne noise test shall be conducted in accordance with MIL-S-81963, energized in accordance with 4.3.4, and shall meet the requirements of 3.6.22, when required by the applicable specification sheet.

4.8.23 Electromagnetic interference. Electromagnetic interference test shall be conducted in accordance with MIL-S-81963. The rotor of the synchro shall be rotated at 1150 ±50 rpm and shall be energized as indicated in Table X. The synchro shall meet the requirements of 3.6.23, when required by the applicable specification sheet.

4.8.24 Synchro zero marking. The applicable synchro windings shall be connected as shown in Figures 1, 2, and 3, phased in accordance with 3.4.3, and the rotor turned until the nullmeter minimum reading is obtained. The relative position of the synchro zero index marked on the housing and the index marked on the shaft shall be in accordance with 3.5.2.

4.9 Environmental.

4.9.1 Vibration. All synchros shall be tested in accordance with MIL-S-81963. During the test, the synchros shall be energized in accordance with Table X with their rotor shafts free to rotate while mechanically loaded. Immediately after the test, each synchro shall be examined for loose or damaged parts and shall meet the requirements of 3.7.1.

4.9.2 Shock.

4.9.2.1 Shock, specified pulse. All synchros shall be tested in accordance with MIL-S-81963, energized in accordance with Figures 13, 14, or 15 with their rotor shafts free to rotate while mechanically loaded and shall meet the requirements of 3.7.2.1.

4.9.2.2 Shock, high impact. All synchros shall be tested in accordance with MIL-S-81963, energized in accordance with Figures 13, 14, or 15 with their rotor shafts free to rotate while mechanically loaded and shall meet the requirements of 3.7.2.2.

4.9.3 Altitude.

4.9.3.1 Altitude low temperature. Synchros shall be tested in accordance with MIL-S-81963, energized in accordance with 4.3.4 and shall meet the requirements of 3.7.3.1.

4.9.3.2 Altitude high temperature. Synchros shall be tested in accordance with MIL-S-81963, energized in accordance with 4.3.4 and shall meet the requirements of 3.7.3.2.

4.9.4 Endurance. Synchros, except rotatable stator units, shall be tested in accordance with MIL-S-81963, energized in accordance with 4.3.4, and the rotor turned at 1150 ±50 rpm. Synchros of the rotatable stator type shall be continuously operated for 2000 hours, energized in accordance with 4.3.4, the housing held stationary, and the rotatable stator rotated at 200 ±10 rpm. Synchros shall meet the requirements of 3.7.4.

4.9.5 Ambient temperature test. The temperature extremes required under 4.9.5.1 and 4.9.5.2 are tests for storage extremes and are required to be accomplished once per synchro. Synchros may be conditioned at the operational temperatures as often as necessary to perform the required tests. Upon completion of the temperature test, the synchro shall be removed from the test chamber and allowed to remain at the standard test conditions of 4.3.1 for at least 4 hours before undergoing further tests.

4.9.5.1 Ambient low temperature. Synchros shall be subjected to the ambient low temperature tests in accordance with MIL-S-81963 and 4.9.5 herein. The synchros shall be energized in accordance with 4.3.4 and shall meet the requirements of 3.7.5.1.

4.9.5.2 Ambient high temperature. Synchros shall be subjected to ambient high temperature tests of $125^{\circ}\pm2^{\circ}$C, unless otherwise specified in the applicable specification sheet, in accordance with MIL-S-81963 and 4.9.5 herein. The synchros shall be energized in accordance with 4.3.4 and shall meet the requirements of 3.7.5.2.

4.9.6 Moisture resistance. Synchros shall be subjected to the moisture resistance test in accordance with MIL-S-81963, energized in accordance with 4.3.4, and shall meet the requirements of 3.7.6 herein.

4.9.7 Explosion resistance. The synchro shall be tested in accordance with MIL-STD-202, Method 109, while being vibrated according to 4.9.1 and energized as specified in Table X. The synchro shall meet the requirements of 3.7.7, when required by the applicable specification sheet. For additional information pertaining to explosion resistance, see MIL-S-81963.

4.9.8 Salt atmosphere. Synchros shall be subjected to the salt atmosphere test in accordance with MIL-S-81963 and shall meet the requirements of 3.7.8, when required by the applicable specification sheet.

4.9.9 Inspection of packaging. The sampling and inspection of the preservation-packaging, packing, and container marking shall be in accordance with the requirements of MIL-S-81963.

5. PACKAGING

5.1 Packaging requirements. The requirements for packaging shall be in accordance with MIL-S-81963.

6. NOTES

6.1 Intended use. The intended use for synchros covered by this specification shall be in accordance with MIL-S-81963.

6.2 Ordering data. Ordering data shall be as specified in MIL-S-81963.

6.3 First article inspection. Information pertaining to first article inspection of synchros shall be obtained as specified in MIL-S-81963.

6.4 Qualification. With respect to products requiring qualification, awards will be made in accordance with MIL-S-81963. The activity responsible for the Qualified Products List is Naval Air Systems Command (AIR-5143), Department of the Navy, Washington, DC 20361-1000; however, information pertaining to qualification of products may be obtained from Commanding Officer, Naval Weapons Support Center (Code 7022), Crane, Indiana 47522-5070.

6.5 Definition of synchro and synchro system types.

6.5.1 Synchro. A synchro is an electromechanical analog converter which, through electromagnetic means, gives an electrical output that is a function of its rotor position or positions its rotor to an angle that is a function of the electrical input.

6.5.1.1 Synchro transmitter. A synchro transmitter converts a mechanical input (rotor position) into an electrical output.

6.5.1.2 Synchro receiver. A synchro receiver converts an electrical input into a rotor position as a mechanical output.

6.5.1.3 Synchro differential transmitter. A synchro differential transmitter gives an electrical output which is a function of two inputs--its electrical input and its mechanical input (rotor position).

6.5.1.4 Synchro differential receiver. A synchro differential receiver gives a mechanical output (rotor position) which is a function of two electrical inputs--its primary input and its secondary input.

6.5.1.5 Control transformer. A control transformer, in conjunction with an amplifier and servomotor, converts an electrical input into a rotor position in high torque applications. The electrical output of the control transformer is amplified and applied to a servomotor which drives the load and the transformer to the null position.

6.5.2 Synchro system. A synchro system is a circuit containing one or more synchros that operate on angular information and convey this information over a distance.

6.5.3 Torque synchro system. A torque synchro system is a system in which the transmitted signal does usable work.

6.5.4 Control synchro system. A control synchro system is a system in which the transmitted signal controls a source of power which does work.

6.6 Definitions and conventions.

6.6.1 Rotor angular displacement.

6.6.1.1 Rotor position. The rotor position of any synchro is an angular mechanical rotor displacement from the synchro zero position, measured in the positive direction.

6.6.1.2 Rotor angle. The rotor angle of a practical synchro is the angular mechanical rotor displacement from the synchro zero position, measured in the positive direction, at which the synchro's output voltages exactly correspond to the output voltages of an ideal synchro set at any specific rotor position.

6.6.2 Electrical error. The electrical error at a given rotor position is the electrical angle minus the rotor position or the rotor position minus the rotor angle (see Figure 16).

6.6.3 Receiver error. Receiver error is the difference in the shaft displacement of the receiver under test to the corresponding shaft position of a torque transmitter of equal size.

6.6.4 Synchronizing time. Synchronizing time is the time required for the rotor of a synchro receiver or differential receiver to approach and stay within 1.0 degree of rest when energized.

6.6.5 Impedance.

6.6.5.1 Rotor open-circuit impedance. The rotor open-circuit impedance of a synchro is:

Zro = The impedance of the rotor with the stator terminals open.

6.6.5.2 Stator open-circuit impedance. The stator open-circuit impedance of a synchro is:

Zso = The stator impedance with the rotor terminals open.

6.6.5.3 Rotor short-circuit impedance. The rotor short-circuit impedance of a synchro is:

Zrs = The impedance of the rotor with the stator terminals shorted.

6.6.5.4 Stator short-circuit impedance. The stator short-circuit impedance of a synchro is:

Zss = The impedance of the stator with the rotor terminals shorted.

6.6.6 Primary and secondary windings. For transmitter and receiver synchros, the rotor is the primary and the stator is the secondary. For control transformers and differential synchros, the stator is the primary and the rotor is the secondary.

6.6.7 Rated voltage. The rated voltage of synchros is the line voltage of the synchro system power supply; i.e., 115 volts or 26 volts.

6.6.8 In-time-phase secondary voltages. The in-time-phase secondary voltage is the time phase fundamental component of the secondary voltage at the first position of maximum coupling when the synchro rotor is turned in the positive direction from synchro zero.

6.6.9 Transformation ratio. The transformation ratio is the ratio of the fundamental frequency component of the no-load secondary voltage at maximum coupling to the voltage applied to the primary.

6.6.10 Phase shift. Phase shift is the difference between the time phase of the fundamental component of the primary voltage and the time phase of the secondary voltage of the synchro at the first position of maximum coupling in the positive direction from synchro zero.

6.6.11 Radial play and end play. The radial play of a synchro rotor is the shaft displacement perpendicular to the shaft axis due to the reversal of a force applied perpendicular to the shaft axis. The end play of a synchro rotor is the axial shaft displacement due to the reversal of an axial force.

6.6.12 Mechanical breakaway torque. Mechanical breakaway torque is the torque required to turn the rotor of a synchro from rest when unenergized.

6.6.13 Torque gradient. Torque gradient is the initial rate of change of torque with angular displacement of the rotor from a position where the torque is zero, when the synchro is energized from a standard torque transmitter of the same frame size and rating. The torque gradient is normally given as the mean value obtained in the range of ±10 degrees from the zero torque position.

6.6.14 Residual (null) voltage. Residual voltage in a synchro is the actual voltage present at the secondary terminals at that position at which the theoretical secondary voltage is zero. This voltage consists of the quadrature component of the energizing frequency and a component which is made up of harmonics of the energizing frequency. Fundamental residual voltage is the quadrature component of the energizing frequency; total residual voltage is the fundamental residual voltage and harmonics.

6.6.15 Time phase. The time phase at a point in a synchro system is the phase of the voltage at that point with respect to the phase of the energizing voltage of the system.

6.6.16 Temperature rise. Temperature rise is the increase of the internal temperature of a synchro above the ambient temperature due to the dissipation of the energizing power.

6.6.17 Units. Unless otherwise specified, units of measurement are as follows:

a. Angles - degrees, minutes
b. Potential - volts, rms
c. Impedance - ohms
d. Current - amperes, rms
e. Temperature - degrees, centigrade
f. Time Phase - degrees
g. Torque - ounce-inches
h. Time - seconds

6.7 Subject term (key word) listing.

Analog converter, electromechanical
Design modifications
Electrical tests
Environmental tests
First article
Mechanical tests
Military part numbers
Military specifications
Qualified products list (QPL)
Qualification
Quality conformance
Rotatable stator
Rotating components
Servomotors
Specification sheets
Standardization
Synchro control transformers
Synchro differential receivers (torque)
Synchro differential transmitters (control)
Synchro differential transmitters (torque)
Synchro receivers (torque)
Synchro receiver transmitters (torque)
Synchro transmitters (control)
Synchro transmitters (torque)

6.8 Changes from previous issue. Asterisks are not used in this revision to identify changes with respect to the previous issue, due to the extensiveness of the changes.

6.9 International standardization agreements. Certain provisions of this specification are the subject of international standardization agreements reached by the NATO Study Group on Analogue and Digital Servocomponents (AC/301(SGI)(STG/1)). When amendment, revision, or cancellation of this specification is proposed which affects or violates the international agreement concerned, the preparing activity will take appropriate reconciliation action through international standardization channels, including departmental standardization offices, if required.

TABLE I. Nomenclature.

Synchro Transmitter	15	CX	4	D	M20708/14-01D
	(Type Designation)				
Item Name	Size	Function	Supply Frequency	Design Modification	Military Part Number
(1.2.1.1)	(1.2.1.2)	(1.2.1.3)	(1.2.1.4)	(1.2.1.5)	(1.2.1.6)

TABLE II. Termination identification marking.

Terminal No.	Wire Lead Color	Winding
R1	Red, White tracer	Rotor 1
R2	Black, White tracer	Rotor 2
R3 (if used)	Yellow, White tracer	Rotor 3
S1	Blue	Stator 1
S2	Black	Stator 2
S3	Yellow	Stator 3

TABLE III. Standard Dimensions for Synchros.

For location of lettered dimensions, see:

FIGURE	4	5	6	7	8	9
SYNCHRO SIZE	05 08	11 15	18	23	31	37

(Dimensions are in inches unless otherwise specified)

DIMENSION		A	B	C	D	E	F					
										PITCH DIAMETER	OUTSIDE DIAMETER	ROOT DIAMETER
SYNCHRO SIZE	FIG			+0.000 −0.005	+0.0000 −0.0005	+0.0000 −0.0005	NO OF TEETH	DIAMETRAL PITCH	PRESSURE ANGLE	+0.000 −0.002	+0.0000 −0.0005	Maximum
05	4	AS LISTED ON SPECIFICATION SHEET TABLE II		0.500 1/	-----	0.3750	--	---	---	----	----	----
08				0.750	-----	0.5000	--	---	---	----	----	----
11	5			1.062	1.000	0.6250	21	120	20°	0.175	0.1872	0.155
15				1.437	1.312	0.8750	21	120	20°	0.175	0.1872	0.155
18	6			1.750	1.562	0.9375	21	120	20°	0.175	0.1872	0.155
23	7			2.250 2/	1.9995 2/	1.990 3/	22	96	20°	0.2291	0.2405	0.205
31	8			3.100	2.750 2/	2.700 3/	22	96	20°	0.2291	0.2405	0.205
37	9			3.625 2/	3.375 2/	3.334 3/	22	96	20°	0.2291	0.2405	0.205

NOTE: 1/ Tolerance +0.000 −0.003

2/ Tolerance +0.000 −0.001

3/ Tolerance +0.000 −0.005

TABLE III. Standard Dimensions for Synchros - Continued.

(Dimensions are in inches unless otherwise specified)

DIMENSION		G	H	I	J	K	L	M	M'	N	N'
SYNCHRO SIZE	FIG		±0.005	±0.005	±0.005	±0.005	±0.005	Min	Min	Min	Min
05	4	AS	0.040 1/	-----	0.040 1/	0.040 1/	0.437 1/	-----	-----	-----	-----
08		LISTED	0.040	-----	0.062	0.062	0.687	-----	-----	-----	-----
11	5	ON	0.062	0.062	0.093	0.062	0.975	0.300	0.180	0.146	0.250
15		SPECIFICATION	0.040	0.132	0.093	0.078	1.312	0.308	0.190	0.166	0.253
18	6	SHEET	0.040	0.132	0.093	0.078	1.625	0.308	0.190	0.166	0.253
23	7	TABLE II	0.420	0.170	0.250	0.203	-----	0.333	0.280	0.156	0.382
31	8		0.990	0.375	0.250	0.250	-----	0.336	0.300	0.185	0.377
37	9		1.030	0.375	0.250	-----	3.390 1/	0.336	0.300	0.185	0.377

NOTE: 1/ Tolerance +0.000
-0.003

TABLE III. Standard Dimensions for Synchros - Continued.

(Dimensions are in inches unless otherwise specified)

DIMENSION		O	P	Q	R	S	T	U	V
SYNCHRO SIZE	FIG	±0.003	±0.003	±0.003	±0.005	Maximum	+0.000 −0.005		Minimum
05	4	-----	-----	-----	-----	-----	-----	AS LISTED ON SPECIFICATION SHEET TABLE II	-----
08		-----	-----	-----	-----	-----	-----		0.245
11	5	0.812	0.062	0.125	0.812	0.020	0.506		0.285
15		1.100	0.062	0.125	1.075	0.060	0.665		0.450
18	6	1.250	0.062	0.125	1.075	0.060	0.810		0.545
23	7	-----	0.062	0.125	1.437	-----	0.064 1/		-----
31	8	-----	0.062	0.125	2.322	-----	0.064 1/		-----
37	9	-----	-----	-----	2.322	-----	-----		-----

NOTE: 1/ Tolerance ±0.010

TABLE III. Standard Dimensions for Synchros - Continued.

(Dimensions are in inches unless otherwise specified)

DIMENSION		W	X	Y	Z	CC	DD	EE
SYNCHRO SIZE	FIG	±0.005	±0.010	±0.005	Maximum	Maximum	+0.000 −0.001	Maximum
05	4	-----	-----	-----	-----	-----	-----	-----
08		-----	0.023	-----	0.748	0.750 2/	-----	-----
11	5	-----	0.069	-----	1.062	-----	-----	-----
15		-----	0.117	-----	1.437	-----	-----	-----
18	6	-----	0.117	-----	1.437	1.750	-----	-----
23	7	0.595	0.463 1/	-----	1.990	-----	1.9995	1.990
31	8	-----	1.020 1/	-----	2.700	-----	2.750	2.700
37	9	1.625	1.220 1/	1.812	2.700	-----	-----	3.334 3/

NOTE: 1/ Tolerance ±0.005

2/ Tolerance +0.000 −0.003

3/ Tolerance +0.000 −0.005

TABLE IV. Qualification and quality conformance inspection.

Test No.	Requirement	Test	Test method or examination	Type					Inspection	
				CT, CTB CDX, CDXB CX, CXB	TX	TDX	TRX	TR TRB TDR	Qualification Sample Number	Quality Conformance
1	3.6.2	4.8.2	Variation of brush contact resistance 1/	X	X	X	X	X	1,2,3,4	X
2	3.6.1	4.8.1	Visual and mechanical inspection 2/	X	X	X	X	X	1,2,3,4	X
3	3.6.3	4.8.3	Shaft radial & end play 1/	X	X	X	X	X	1,2,3,4	X
4	3.6.4	4.8.4	Shaft runout	X	X	X	X	X	1,2,3,4	X
5	3.6.5	4.8.5	Mechanical breakaway torque	X	X	X	-	-	1,2,3,4	X
6	3.6.6	4.8.6	Torque gradient	-	X	X	X	X	1,2,3,4	X
7	3.6.7	4.8.7	Dielectric withstanding voltage	X	X	X	X	X	1,2,3,4	X
8	3.6.8	4.8.8	Insulation resistance	X	X	X	X	X	1,2,3,4	X
9	3.6.9	4.8.9	Primary current	X	X	X	X	X	1,2,3,4	X
10	3.6.10	4.8.10	Primary power	X	X	X	X	X	1,2,3,4	X
11	3.6.11	4.8.11	Transformation ratio	X	X	X	X	X	1,2,3,4	X
12	3.6.12	4.8.12	Phase shift	X	X	X	X	X	1,2,3,4	X
13	3.5.2	4.8.24	Zero marking	X	X	X	X	X	1,2,3,4	X

TABLE IV. Qualification and quality conformance inspection - Continued.

Test No.	Requirement	Test	Test method or examination	Type					Inspection	
				CT, CTB CDX, CDXB CX, CXB	TX	TDX	TRX	TR TRB TDR	Qualification Sample Number	Quality Conformance
14	3.6.13	4.8.13	Electrical error	X	X	X	X	X	1,2,3,4	X
15	3.6.14	4.8.14	Residual (null) voltage	X	X	-	X	-	1,2,3,4	X
16	3.6.15	4.8.15	Receiver error	-	-	-	X	X	1,2,3,4	X
17	3.6.16	4.8.16	Spinning	-	-	-	X	X	1,2,3,4	X
18	3.6.17	4.8.17	Synchronizing time	-	-	-	X	X	1,2,3,4	X
19	3.6.19	4.8.19	Impedance	X	X	X	X	X	1,2,3,4	-
20	3.6.20	4.8.20	Temperature rise	X	X	X	X	X	1,2,3,4	-
21	3.6.21	4.8.21	Variation of voltage and frequency	-	X	X	X	X	1,2,3,4	-
22	3.6.22	4.8.22	Audible noise, structureborne 3/	X	X	X	X	X	1,2,3,4	-
23	3.6.23	4.8.23	Electromagnetic interference 3/	X	X	X	X	X	1,2,3,4	-
24	3.7.1	4.9.1	Vibration, followed by tests nos. 1, 2, 3, 5, 7, 8, 14, 15, 16, and 18	X	X	X	X	X	1,2,3,4	-
25	3.7.2.1	4.9.2.1	Shock, low impact followed by test nos. 1, 2, 3, 5, 7, 8, 14, 15, 16, and 18	X	X	X	X	X	1,2,3,4	-

TABLE IV. Qualification and quality conformance inspection - Continued.

Test No.	Requirement	Test	Test method or examination	Type					Inspection	
				CT, CTB CDX, CDXB CX, CXB	TX	TDX	TRX	TR TRB TDR	Qualification Sample Number	Quality Conformance
26	3.7.3.1	4.9.3.1	Altitude, low temperature, perform test nos. 1, 2, and 8	X	X	X	X	X	1,2	-
27	3.7.3.2	4.9.3.2	Altitude, high temperature, perform test nos. 1, 2, and 8	X	X	X	X	X	1,2	-
28	3.7.4	4.9.4	Endurance, followed by test nos. 1, 2, 3, 5, 7, 8, 14, 15, 16, and 18	X	X	X	X	X	1,2	-
29	3.7.5.1	4.9.5.1	Ambient low temperature, perform test nos. 1, 2, 5, 7, 8, 14, 15, 16, and 18	X	X	X	X	X	3,4	-
30	3.7.5.2	4.9.5.2	Ambient high temperature, perform test nos. 1, 2, 5, 7, 8, 14, 15, 16, and 18	X	X	X	X	X	3,4	-
31	3.7.6	4.9.6	Moisture resistance followed by test nos. 1, 2, 5, 7, 8, 14, 15, 16, and 18	X	X	X	X	X	3,4	-
32	3.7.2.2	4.9.2.2	Shock, high impact, followed by test nos. 1, 2, 3, 5, 7, 8, 14, 15, 16, and 18	X	X	X	X	X	1,2,3,4	-

TABLE IV. Qualification and quality conformance inspection - Continued.

Test No.	Requirement	Test	Test method or examination	Type					Inspection	
				CT, CTB CDX, CDXB CX, CXB	TX	TDX	TRX	TR TRB TDR	Qualification Sample Number	Quality Conformance
33	3.7.7	4.9.7	Explosion resistance 3/	X	X	X	X	X	1,2	-
34	3.7.8	4.9.8	Salt atmosphere 3/	X	X	X	X	X	1,2	-
35	3.6.18	4.8.18	Security of terminals or wire lead stress	X	X	X	X	X	1,2,3,4	-

1/ If mechanical adjustments are performed during the quality conformance tests, then all the Quality Conformance tests of Table IV shall be repeated following the adjustments.

2/ When required by Test nos. 24 through 32, only visual examination need be performed.

3/ Test shall be performed only when required by the specification sheet.

TABLE V. Mounting Hardware. 1/

Hardware	Number Required	Military Standard	Synchro Size
Machine Screw	5 EA 2/	MS-35276-203 MS-35275-213 MS-35275-227	11 15, 18, 23 31, 37
Lock Washer	5 EA 2/	MS-35338-134 MS-35338-135 MS-35338-136	11 15, 18, 23 31, 37
Drive Washer	1 EA	MS-17186-6 MS-17186-8	11, 15, 18, 23 31, 37
Nut	1 EA	MS-17187-2 MS-17187-3	11, 15, 18, 23 31, 37

1/ For information only, see MS17183, Clamp Assembly (Synchro)

2/ Differential transmitters (CDX, TDX and CDXB) require 6 each machine screws and lock washers instead of the 5 each required on all other types of synchros.

TABLE VI. Standard test energizing connections.

Synchro Type	Primary		Voltage in Approximate Time Phase 1/ 2/	Secondary Terminals
	Volts 3/	Terminals 4/	Secondary and Primary	
Transmitter & Receiver	115 or 26 5/	R1-R2	E(S1S2) and E(R2R1) E(S3S2) and E(R2R1)	S1-S3
Differential Transmitter & Receiver	78 or 10.2 5/	S2-S1S3	E(R3R2) and E(S3S2) E(R1R2) and E(S1S2)	R1-R3
Control Transformer	78 or 10.2 5/	S2-S1S3	E(R1R2) and E(S2S1) 6/ E(R1R2) and E(S2S3) 6/	R1-R2

1/ E(S1S2) is the voltage between terminals S1 and S2. Other voltages are similarly defined.

2/ The sequence as indicated in parentheses designates the sense of voltage vector.

3/ Frequency of 60 or 400 Hz, as applicable.

4/ S1S3 indicates that terminals S1 and S3 are connected together.

5/ Applies to 26-volt synchros.

6/ For small counterclockwise deflections from synchro zero.

TABLE VII. Dielectric withstanding voltages and application points.

Maximum Rated Voltage, rms	Initial Test Voltages, rms (50 or 60 Hz)	Subsequent Test Voltages rms (50 or 60 Hz)
	Each winding to housing and primary to secondary windings	Each winding to housing and primary to secondary windings
Up to 50	242 to 250	194 to 200
51 to 100	485 to 500	388 to 400
101 to 200	870 to 900	696 to 720

TABLE VIII. Connections, energizing voltage and angular displacements for residual null voltage test.

Test Unit	Primary Supply Test Voltage			Residual (Null) Voltage Reading	
	Across Terminals 1/	115-Volt Synchros	26-Volt Synchros	Across Terminals	At Electrical Angles
CX, TX, TR	R1-R2	115.0	26.0	S1-S3 S3-S2 S2-S1	0° and 180° 60° and 240° 120° and 300°
CDX, TDX, TDR	S2-S1S3	78.0	10.2	R1-R3 R2-R1 R3-R2	0° and 180° 60° and 240° 120° and 300°
CDX, TDX, TDR	S3-S1S2	78.0	10.2	R2-R1 R3-R2 R1-R3	0° and 180° 60° and 240° 120° and 300°
CDX, TDX, TDR	S1-S2S3	78.0	10.2	R3-R2 R1-R3 R2-R1	0° and 180° 60° and 240° 120° and 300°
CT	S2-S1S3 S1-S2S3 S3-S1S2	78.0 78.0 78.0	10.2 10.2 10.2	R1-R2 R1-R2 R1-R2	0° and 180° 60° and 240° 120° and 300°

1/ S1S3 indicates that terminals S1 and S3 are connected together. Other connections are similarly defined.

TABLE IX. Impedance designations.

Impedance	Type of Synchro Under Test	Terminals for Impedance Measurements 1/	Voltage Across Synchro Terminals		Additional Connections
			115V Synchros	26V Synchros	
Rotor, Open Circuit Impedance Zro	CX, TX, TR, TRX	R1-R2	115	26	-
	CT	R1-R2	57.3	22.5	-
	CDX, TDX, TDR	R2-R1R3	78	10.2	-
Stator, Open Circuit Impedance Zso	All types	S2-S1S3	78	10.2	-
Rotor, Short Circuit Impedance Zrs	CX, TX, CT, TR, TRX	R1-R2	2/	2/	S1S2S3
	CDX, TDX, TDR	R2-R1R3	2/	2/	S1S2S3
Stator, Short Circuit Impedance Zss	CX, CT, TX, TR, TRX	S2-S1S3	3/	3/	R1R2
	CDX, TDX, TDR	S2-S1S3	3/	3/	R1R2R3

1/ R1R3 indicates that terminals R1 and R3 are connected together. Other connections are similarly defined.

2/ The voltage necessary to induce a current within ± 3 percent of current in Zro measurement.

3/ The voltage necessary to induce a current within ± 3 percent of current in Zso measurement.

TABLE X. Connections and voltages for electromagnetic interference, vibration, endurance and explosion tests.

Type	Terminals 1/	Voltage	
		115 Volt Synchros	26 Volt Synchros
Transmitters and receivers	R1-R2	115 ± 5%	26.0 ± 5%
Differential receivers and differential transmitters	R2-R1R3	78 ± 5%	10.2 ± 5%
Control transformers	R1-R2	57 ± 5%	22.2 ± 5%

1/ R1R3 indicates that terminals R1 and R3 are connected together.

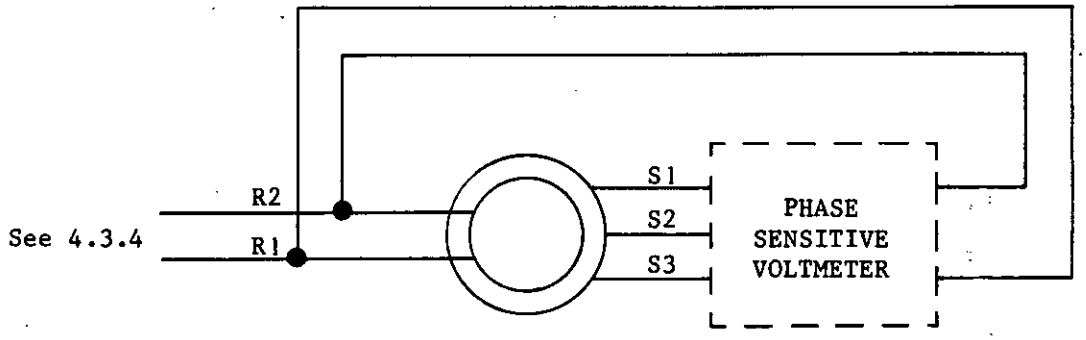

FIGURE 1. Diagram for determining synchro zero position of transmitters and receivers.

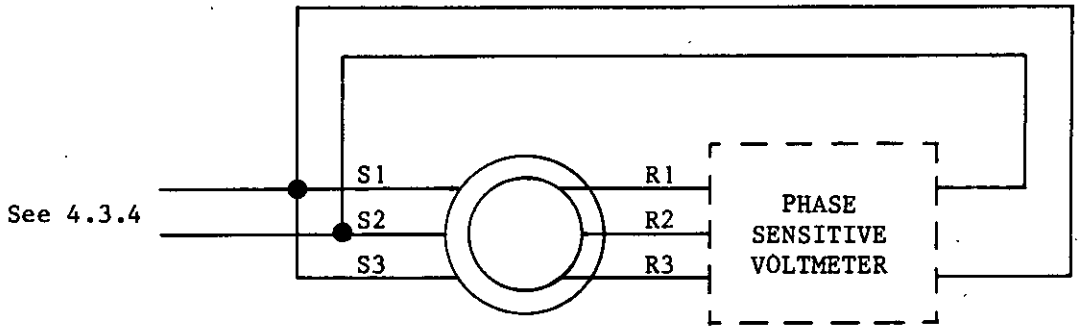

FIGURE 2. Diagram for determining synchro zero position of differential transmitters and differential receivers.

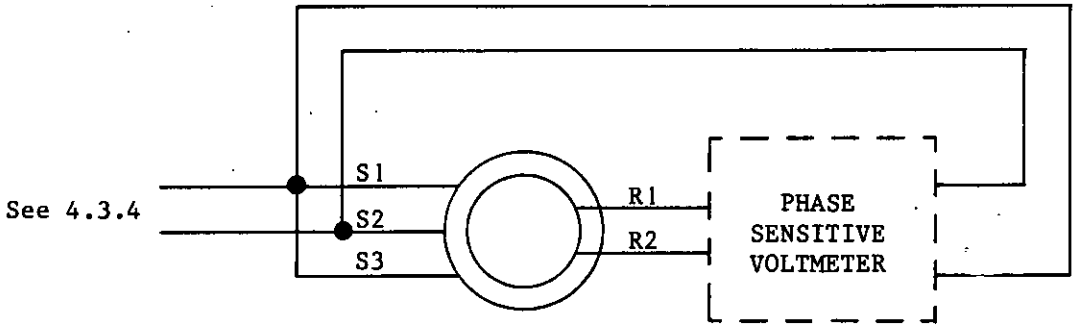

FIGURE 3. Diagram for determining synchro zero position of control transformers.

NOTE: LETTERED DIMENSIONS ARE SHOWN IN TABLE III

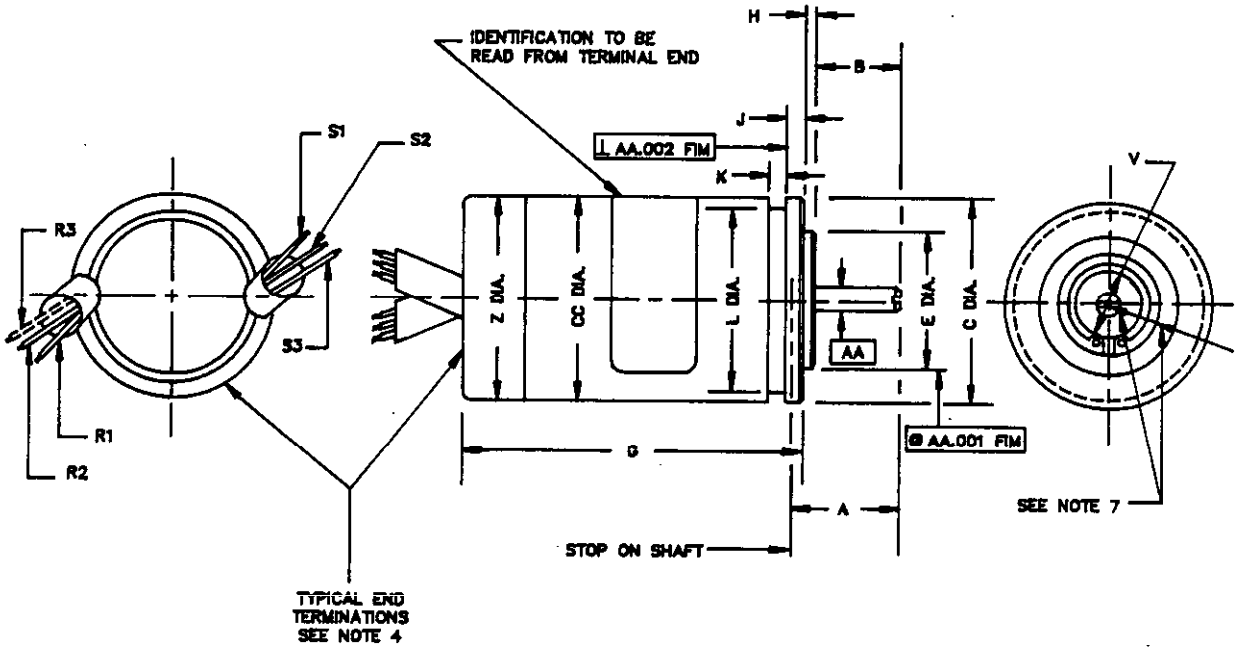

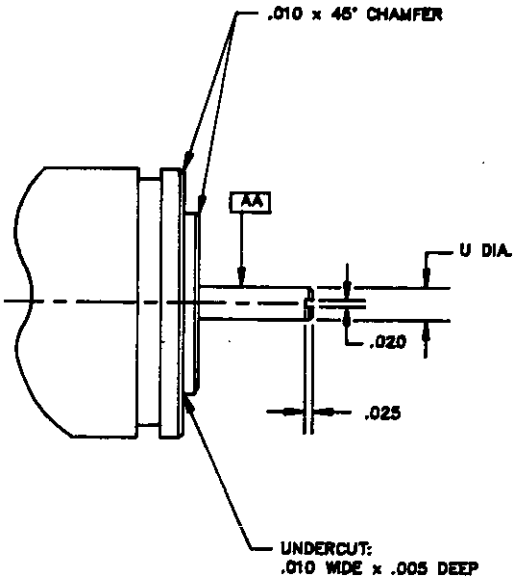

NOTES:

1. PERPENDICULARITY AND CONCENTRICITY SHALL BE MEASURED WITH THE UNIT IN A VERTICAL POSITION SUPPORTED BY THE SHAFT, THEN THE HOUSING ROTATED.

2. RUNOUT OF THE SMOOTH PORTION OF SHAFT "AA" SHALL NOT EXCEED .0008 FIM.

3. END PLAY AND RADIAL PLAY SHALL BE MEASURED DURING THE REVERSAL OF THE FOLLOWING LOADS:

   END PLAY – 1/2 POUND RADIAL PLAY – 1/2 POUND

4. TERMINAL LEAD WIRES SHALL DEPART THROUGH THE BACK SURFACE OF THE TERMINAL END OF THE SYNCHRO IN ANY ACCEPTABLE MANNER.

5. MINOR VARIATIONS OF UNIT CONFIGURATION ARE PERMITTED FOR UNDIMENSIONED DESIGN DETAIL.

6. UNLESS OTHERWISE SPECIFIED, DIMENSIONS ARE IN INCHES. TOLERANCES ON FRACTIONS ±1/64, DECIMALS ±.005, ANGLES ±2°.

7. MARK ON HOUSING IS TO MATCH SHAFT MARK WITHIN 10° WHEN ROTOR IS SET AT APPROXIMATELY SYNCHRO ZERO AND WILL BEAR NO RELATION TO THE CENTER LINES SHOWN ON THIS DRAWING.

8. DIELECTRIC WITHSTANDING TEST POTENTIAL SHALL BE 500 +0/−15 RMS VOLTS FOR INITIAL APPLICATIONS AND 400 ±12 RMS VOLTS FOR SUBSEQUENT TESTS. THE INSULATION RESISTANCE TEST SHALL BE PERFORMED WITH A DC POTENTIAL OF 250 VOLTS.

FIGURE 4. Outline drawing for size 05 and 08 synchros.

NOTE: LETTERED DIMENSIONS ARE SHOWN IN TABLE III

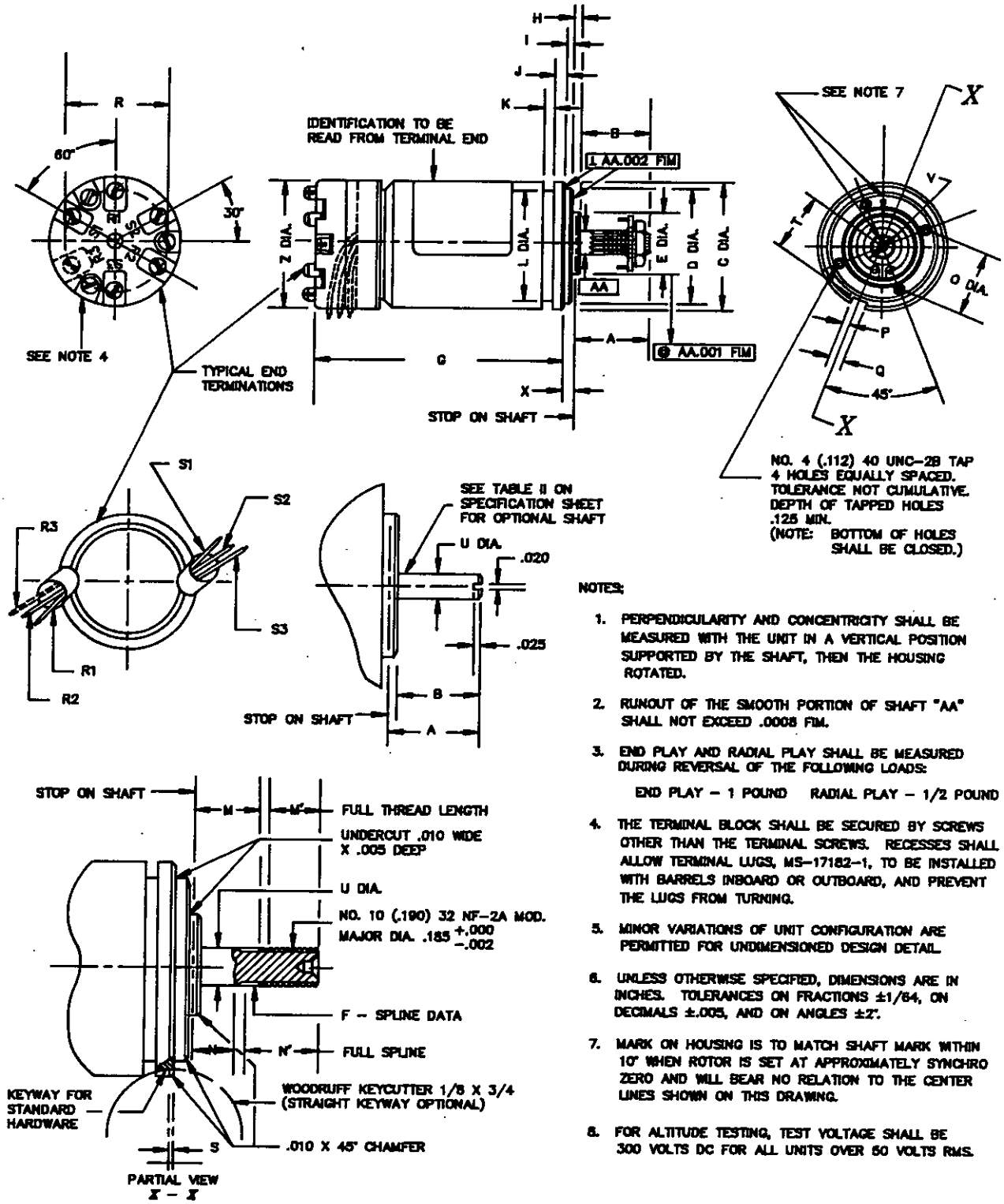

NOTES:

1. PERPENDICULARITY AND CONCENTRICITY SHALL BE MEASURED WITH THE UNIT IN A VERTICAL POSITION SUPPORTED BY THE SHAFT, THEN THE HOUSING ROTATED.
2. RUNOUT OF THE SMOOTH PORTION OF SHAFT "AA" SHALL NOT EXCEED .0008 FIM.
3. END PLAY AND RADIAL PLAY SHALL BE MEASURED DURING REVERSAL OF THE FOLLOWING LOADS:

   END PLAY - 1 POUND RADIAL PLAY - 1/2 POUND
4. THE TERMINAL BLOCK SHALL BE SECURED BY SCREWS OTHER THAN THE TERMINAL SCREWS. RECESSES SHALL ALLOW TERMINAL LUGS, MS-17182-1, TO BE INSTALLED WITH BARRELS INBOARD OR OUTBOARD, AND PREVENT THE LUGS FROM TURNING.
5. MINOR VARIATIONS OF UNIT CONFIGURATION ARE PERMITTED FOR UNDIMENSIONED DESIGN DETAIL.
6. UNLESS OTHERWISE SPECIFIED, DIMENSIONS ARE IN INCHES. TOLERANCES ON FRACTIONS ±1/64, ON DECIMALS ±.005, AND ON ANGLES ±2°.
7. MARK ON HOUSING IS TO MATCH SHAFT MARK WITHIN 10° WHEN ROTOR IS SET AT APPROXIMATELY SYNCHRO ZERO AND WILL BEAR NO RELATION TO THE CENTER LINES SHOWN ON THIS DRAWING.
8. FOR ALTITUDE TESTING, TEST VOLTAGE SHALL BE 300 VOLTS DC FOR ALL UNITS OVER 50 VOLTS RMS.

FIGURE 5. Outline drawing for size 11 and 15 synchros.

NOTE: LETTERED DIMENSIONS ARE SHOWN IN TABLE III

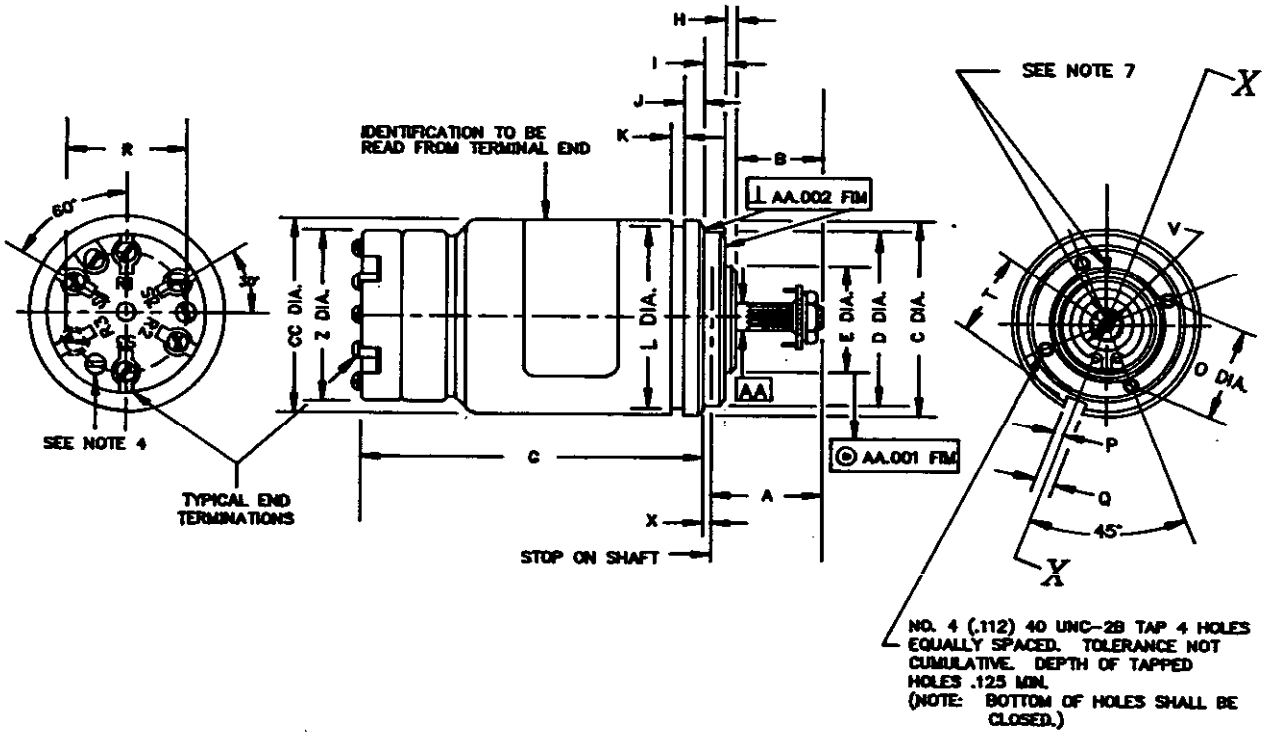

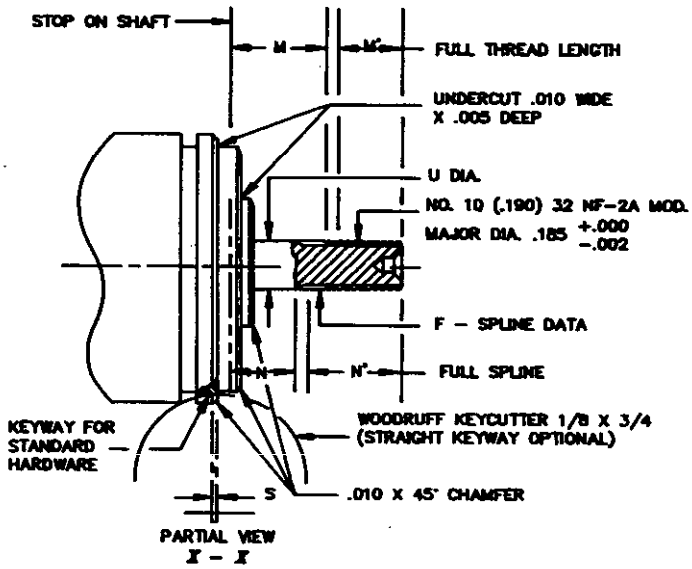

NOTES:

1. PERPENDICULARITY AND CONCENTRICITY SHALL BE MEASURED WITH THE UNIT IN A VERTICAL POSITION SUPPORTED BY THE SHAFT, THEN THE HOUSING ROTATED.
2. RUNOUT OF THE SMOOTH PORTION OF SHAFT "AA" SHALL NOT EXCEED .0008 FIM.
3. END PLAY AND RADIAL PLAY SHALL BE MEASURED DURING REVERSAL OF THE FOLLOWING LOADS:

   END PLAY – 1 POUND RADIAL PLAY – 1/2 POUND
4. THE TERMINAL BLOCK SHALL BE SECURED BY SCREWS OTHER THAN THE TERMINAL SCREWS. RECESSES SHALL ALLOW TERMINAL LUGS, MS-17182-1, TO BE INSTALLED WITH BARRELS INBOARD OR OUTBOARD, AND PREVENT THE LUGS FROM TURNING.
5. MINOR VARIATIONS OF UNIT CONFIGURATION ARE PERMITTED FOR UNDIMENSIONED DESIGN DETAIL.
6. UNLESS OTHERWISE SPECIFIED, DIMENSIONS ARE IN INCHES. TOLERANCES ON FRACTIONS ±1/64, ON DECIMALS ±.005, AND ON ANGLES ±2°.
7. MARK ON HOUSING IS TO MATCH SHAFT MARK WITHIN 10° WHEN ROTOR IS SET AT APPROXIMATELY SYNCHRO ZERO AND WILL BEAR NO RELATION TO THE CENTER LINES SHOWN ON THIS DRAWING.

FIGURE 6. Outline drawing for size 18 synchros.

NOTE: LETTERED DIMENSIONS ARE SHOWN IN TABLE III

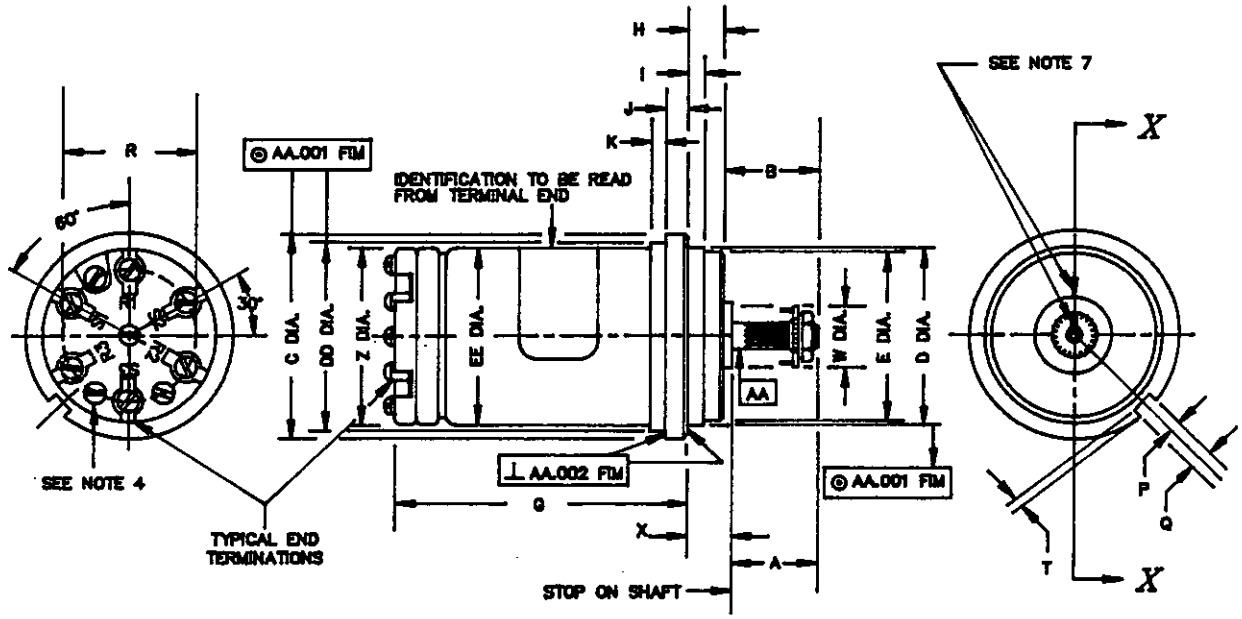

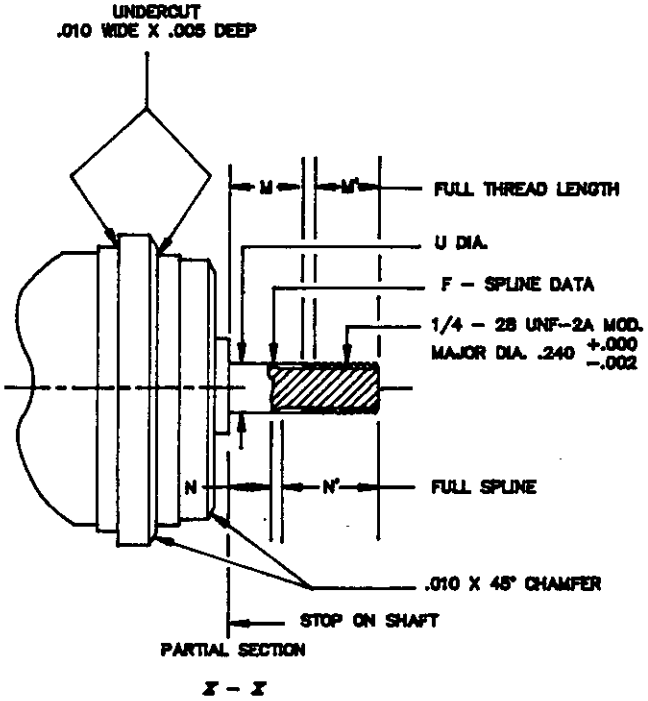

NOTES:

1. PERPENDICULARITY AND CONCENTRICITY SHALL BE MEASURED WITH THE UNIT IN A VERTICAL POSITION SUPPORTED BY THE SHAFT, THEN THE HOUSING ROTATED.
2. RUNOUT OF THE SMOOTH PORTION OF SHAFT "AA" SHALL NOT EXCEED .0006 FIM.
3. END PLAY AND RADIAL PLAY SHALL BE MEASURED DURING REVERSAL OF THE FOLLOWING LOADS:

   END PLAY – 1 POUND RADIAL PLAY – 1/2 POUND
4. THE TERMINAL BLOCK SHALL BE SECURED BY SCREWS OTHER THAN THE TERMINAL SCREWS. RECESSES SHALL ALLOW TERMINAL LUGS, MS–17182–1, TO BE INSTALLED WITH BARRELS INBOARD OR OUTBOARD, AND PREVENT THE LUGS FROM TURNING.
5. MINOR VARIATIONS OF UNIT CONFIGURATION ARE PERMITTED FOR UNDIMENSIONED DESIGN DETAIL.
6. UNLESS OTHERWISE SPECIFIED, DIMENSIONS ARE IN INCHES. TOLERANCES ON FRACTIONS ± 1/64, ON DECIMALS ± .005, AND ON ANGLES ± 2°.
7. MARK ON HOUSING IS TO MATCH SHAFT MARK WITHIN 10° WHEN ROTOR IS SET AT APPROXIMATELY SYNCHRO ZERO AND WILL BEAR NO RELATION TO THE CENTER LINES SHOWN ON THIS DRAWING.

FIGURE 7. Outline drawing for size 23 synchros.

NOTE: LETTERED DIMENSIONS ARE SHOWN IN TABLE III

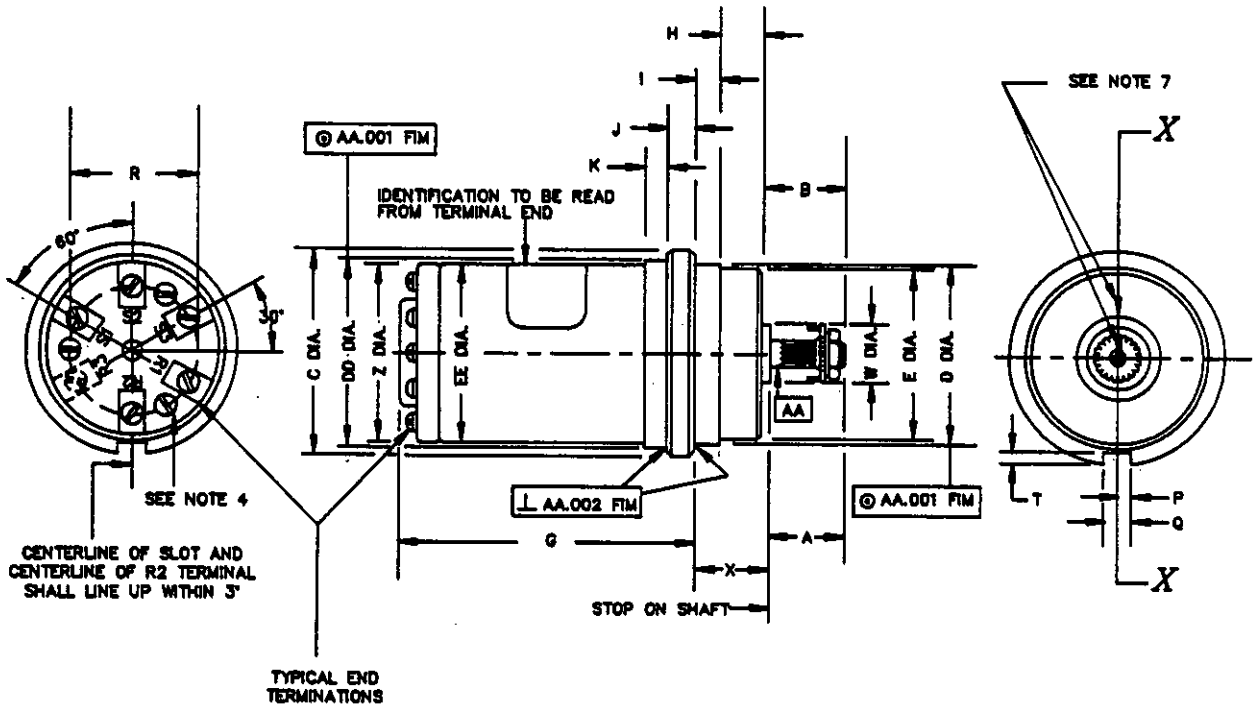

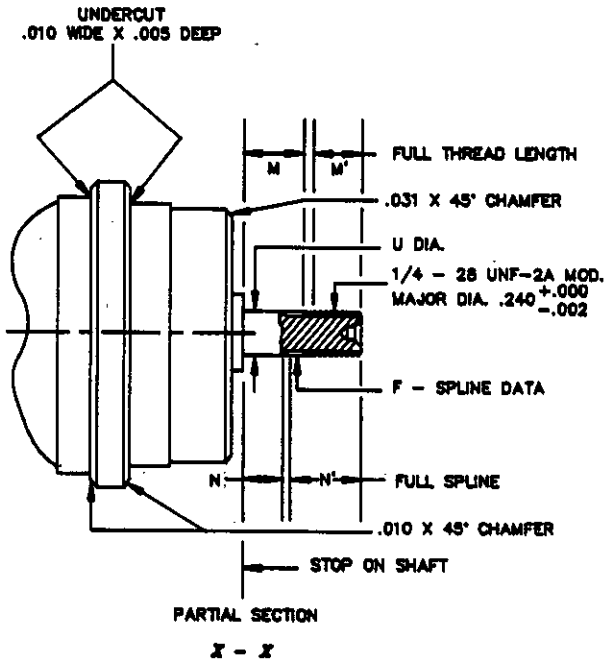

NOTES:

1. PERPENDICULARITY AND CONCENTRICITY SHALL BE MEASURED WITH THE UNIT IN A VERTICAL POSITION SUPPORTED BY THE SHAFT, THEN THE HOUSING ROTATED.
2. RUNOUT OF THE SMOOTH PORTION OF SHAFT "AA" SHALL NOT EXCEED .0008 FIM.
3. END PLAY AND RADIAL PLAY SHALL BE MEASURED DURING REVERSAL OF THE FOLLOWING LOADS:

   END PLAY - 1 POUND RADIAL PLAY - 1 POUND
4. THE TERMINAL BLOCK SHALL BE SECURED BY SCREWS OTHER THAN THE TERMINAL SCREWS. RECESSES SHALL ALLOW TERMINAL LUGS, MS-25036-6, TO BE INSTALLED WITH BARRELS INBOARD OR OUTBOARD, AND PREVENT THE LUGS FROM TURNING.
5. MINOR VARIATIONS OF UNIT CONFIGURATION ARE PERMITTED FOR UNDIMENSIONED DESIGN DETAIL.
6. UNLESS OTHERWISE SPECIFIED, DIMENSIONS ARE IN INCHES. TOLERANCES ON FRACTIONS ±1/64, ON DECIMALS ±.005, AND ON ANGLES ±2°.
7. MARK ON HOUSING IS TO MATCH SHAFT MARK WITHIN 10° WHEN ROTOR IS SET AT APPROXIMATELY SYNCHRO ZERO AND WILL BEAR NO RELATION TO THE CENTER LINES SHOWN ON THIS DRAWING.

FIGURE 8. Outline drawing for size 31 synchros.

NOTE: LETTERED DIMENSIONS ARE SHOWN IN TABLE III

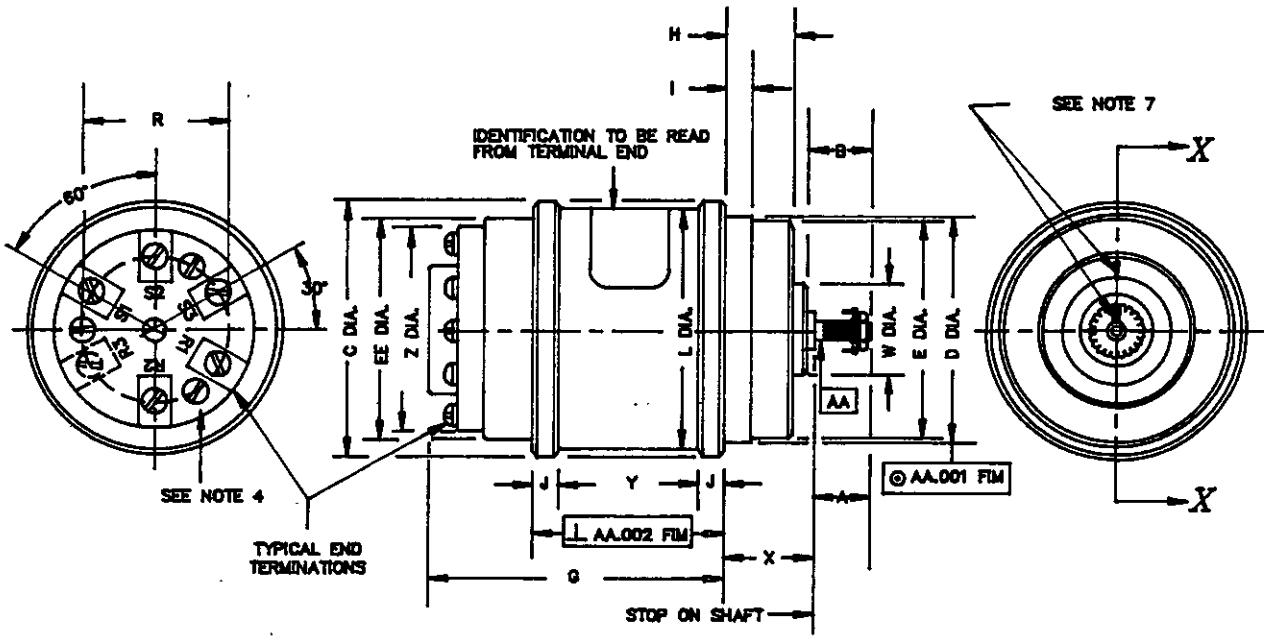

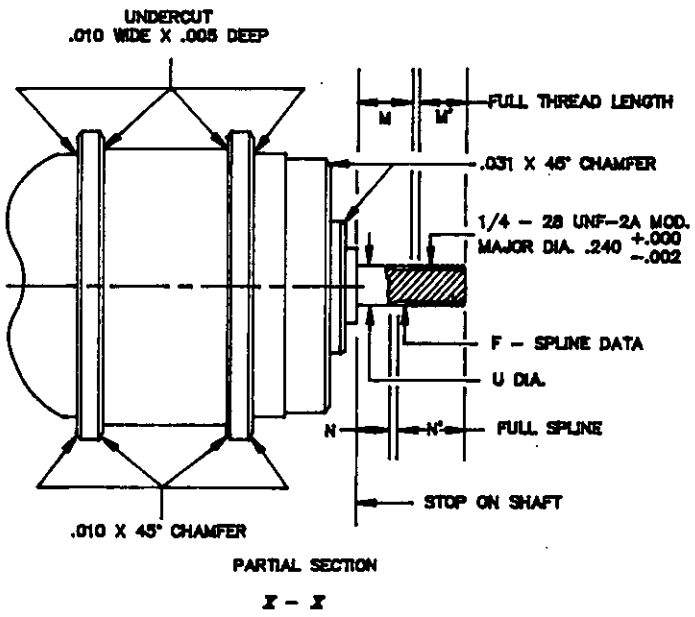

NOTES:

1. PERPENDICULARITY AND CONCENTRICITY SHALL BE MEASURED WITH THE UNIT IN A VERTICAL POSITION SUPPORTED BY THE SHAFT, THEN THE HOUSING ROTATED.
2. RUNOUT OF THE SMOOTH PORTION OF SHAFT "AA" SHALL NOT EXCEED .0008 FIM.
3. END PLAY AND RADIAL PLAY SHALL BE MEASURED DURING REVERSAL OF THE FOLLOWING LOADS:

   END PLAY – 1 POUND RADIAL PLAY – 1 POUND
4. THE TERMINAL BLOCK SHALL BE SECURED BY SCREWS OTHER THAN THE TERMINAL SCREWS. RECESSES SHALL ALLOW TERMINAL LUGS, MS-25036-6, TO BE INSTALLED WITH BARRELS INBOARD OR OUTBOARD, AND PREVENT THE LUGS FROM TURNING.
5. MINOR VARIATIONS OF UNIT CONFIGURATION ARE PERMITTED FOR UNDIMENSIONED DESIGN DETAIL.
6. UNLESS OTHERWISE SPECIFIED, DIMENSIONS ARE IN INCHES. TOLERANCES ON FRACTIONS ±1/64, ON DECIMALS ±.005, AND ON ANGLES ±2°.
7. MARK ON HOUSING IS TO MATCH SHAFT MARK WITHIN 10° WHEN ROTOR IS SET AT APPROXIMATELY SYNCHRO ZERO AND WILL BEAR NO RELATION TO THE CENTER LINES SHOWN ON THIS DRAWING.

FIGURE 9. Outline drawing for size 37 synchros.

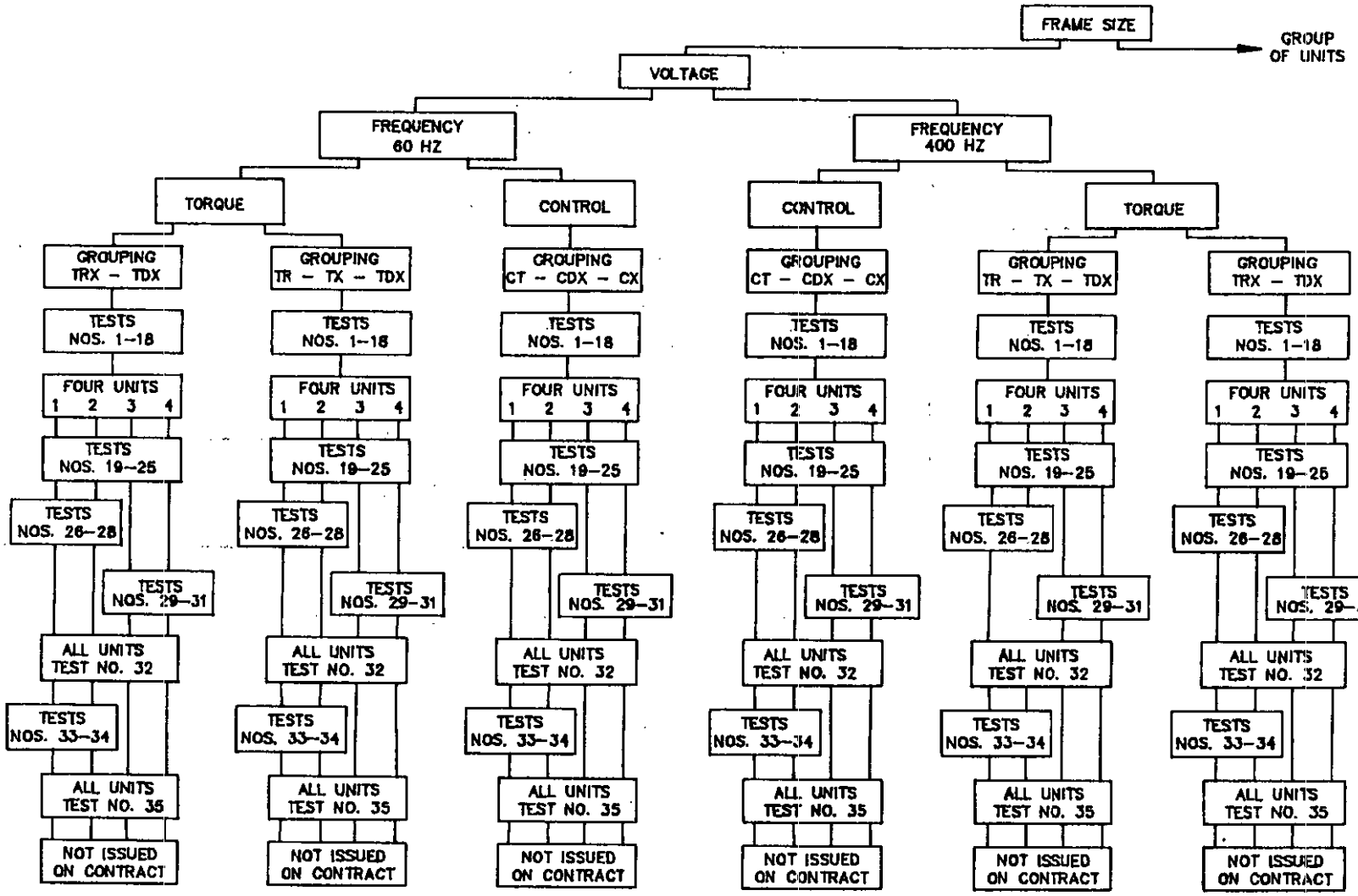

FIGURE 10. Breakdown of analogy testing.

NOTES:

1. In the case of 3 types in a group, 1 of the 2 complex units shall be selected as the 1st or 2nd sample and the other selected as the 3rd or 4th sample.
2. The numbers of all tests shown above correspond to those in Table IV.
3. Test Nos. 22, 23, 33, and 34 shall be performed when required by the specification sheet.

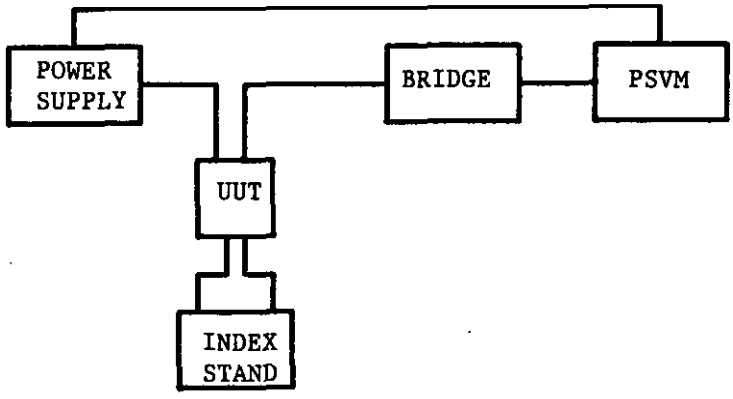

FIGURE 11. Example of electrical error test setup for transmitters, receivers, and rotors of differentials.

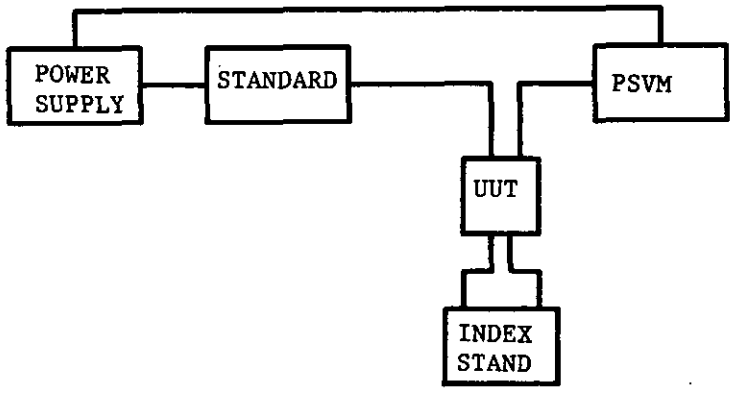

FIGURE 12. Example of electrical error test setup for control transformers and stators of differentials.

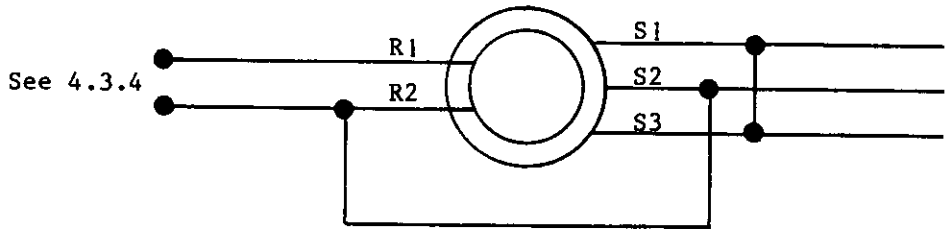

FIGURE 13. Energization of transmitters and receivers for shock test.

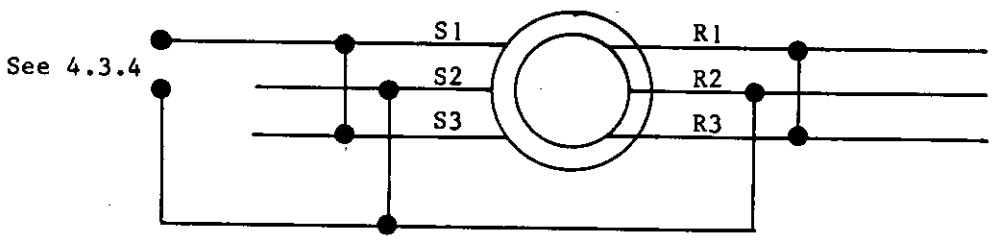

FIGURE 14. Energization of differential transmitters and receivers for shock test.

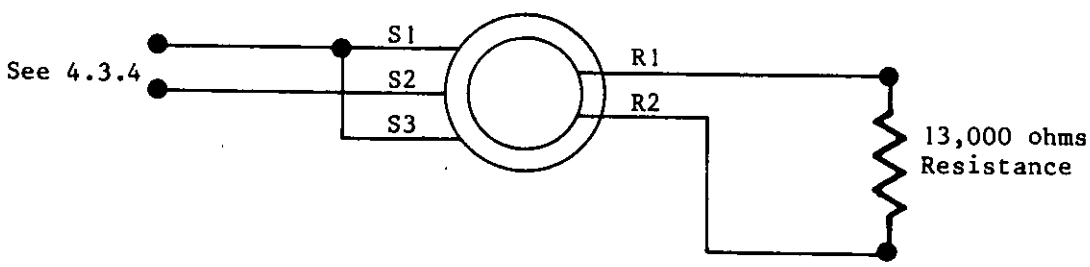

FIGURE 15. Energization of control transformers for shock test.

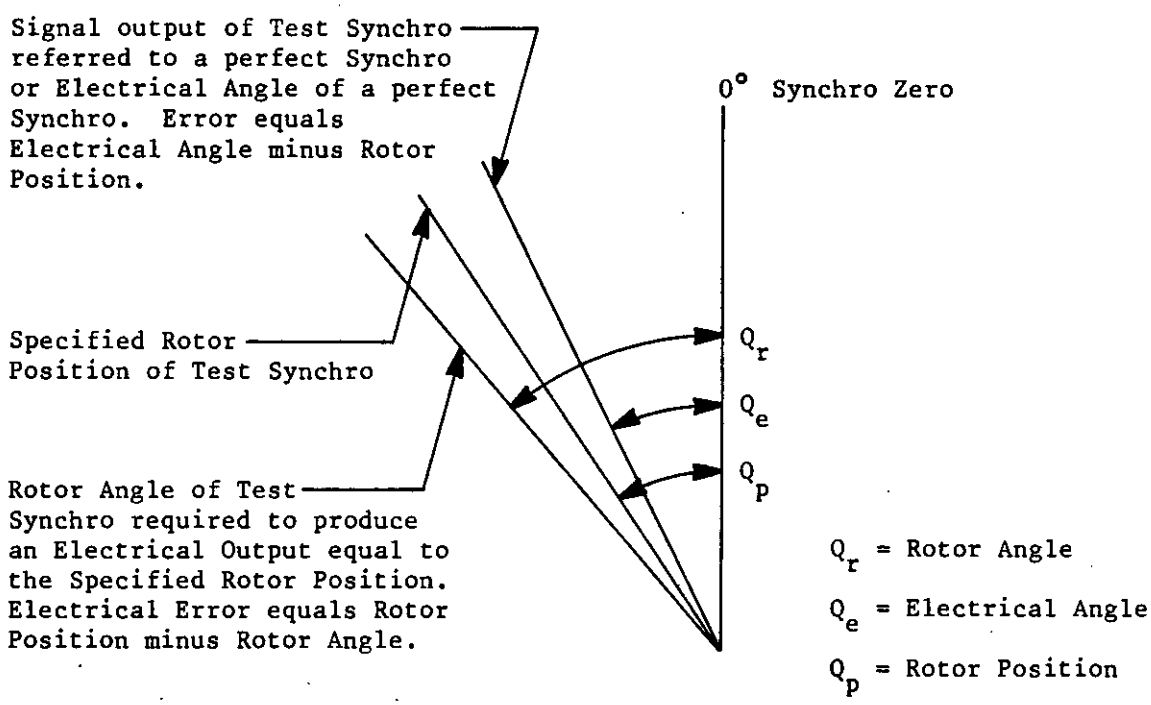

FIGURE 16. Rotor angular geometry.

INDEX

INDEX

INDEX

INDEX

Custodians:
Army-AR
Navy-AS
Air Force-85

Review Activities:
Army-AV,MI
Navy-EC,SH,OS
Air Force-99,17
DLA-ES

User Activities:
Army-AT,ER
Navy-CG,MC
Air Force-19

Preparing Activity:
Navy-AS

(Project 5990-0333)

(TO DETACH THIS FORM, CUT ALONG THIS LINE.)

STANDARDIZATION DOCUMENT IMPROVEMENT PROPOSAL

(See Instructions – Reverse Side)

1. DOCUMENT NUMBER	2. DOCUMENT TITLE
MIL-S-20708	SYNCHROS, GENERAL SPECIFICATION

3a. NAME OF SUBMITTING ORGANIZATION	4. TYPE OF ORGANIZATION *(Mark one)*
	☐ VENDOR
b. ADDRESS *(Street, City, State, ZIP Code)*	☐ USER
	☐ MANUFACTURER
	☐ OTHER *(Specify)*: _____

5. PROBLEM AREAS

a. Paragraph Number and Wording:

b. Recommended Wording:

c. Reason/Rationale for Recommendation:

6. REMARKS

7a. NAME OF SUBMITTER *(Last, First, MI)* – Optional	b. WORK TELEPHONE NUMBER *(Include Area Code)* – Optional
c. MAILING ADDRESS *(Street, City, State, ZIP Code)* – Optional	8. DATE OF SUBMISSION *(YYMMDD)*

DD FORM 82 MAR 1426

PREVIOUS EDITION IS OBSOLETE.