Downloaded from http://www.everyspec.com

MIL-S-19557/10A(AS)
9 February 1987
SUPERSEDING
MIL-S-19557/10(AS)
1 April 1983

MILITARY SPECIFICATION SHEET

STARTER, AIRCRAFT ENGINE, AIR TURBINE, MODEL A-30

This specification sheet is approved for use by the Naval Air Systems Command, Department of the Navy, and is available for use by all Departments and Agencies of the Department of Defense.

The complete requirements for procuring the starter described herein shall consist of this document and the latest issue of Specification MIL-S-19557(AS).

REQUIREMENTS

Applicable paragraphs of MIL-S-19557C(AS)	
3.8.1	Envelope: Figures 1 and 2
3.7	Weight, Max (Lb): 30.0 (including insulation blanket, if required)
3.7.1	Overhung Moment, Max (In Lb): 166
6.1	Aircraft Model: F-18
4.5.16	Engine Model: F404
3.8.2.1	Quick-Attach-Detach Mounting: V Band coupling flange mount in accordance with AS964 except as shown on Figures 1 and 2
3.8.2.2	Engine Accessory Drive: AS969-2S type pad on Aircraft Mounted Accessory Drive (AMAD). Gearbox modified to adapt to Figures 1 and 2
3.8.3	Air Inlet and Exhaust Connections: Figures 1 and 2
3.8.3.2	Air Inlet Pressure Loads

Maximum Normal Pressure 51 PSIG

Maximum Single Failure Pressure 83 PSIG

Proof Pressure 165 PSIG

AMSC N/A FSC 2995

DISTRIBUTION STATEMENT A. Approved for public release; distribution is unlimited.

Downloaded from http://www.everyspec.com

REQUIREMENTS (cent'd)

Applicable paragraphs of MIL-S-19557C(AS)

The starter shall not be damaged or deformed after being subjected to proof pressure. The starter shall not structurally fail while being subjected to proof pressure.

3.3.2.1 Acceleration Forces

LIMIT	ULTIMATE	
+ 5.4	+ 8.1	Nz = Vertical
Ny = - 5.2	Ny =- 7.8	Nx = Horizontal
		Ny = Axial
Nx = ± 2.5	Nx = ± 3.75	
+9.5	+ 14.25	
Nz = -5.8	Nz = - 8.9	

3.5.5
3.9.1 Rotation Viewed from Anti-Drive End: Counterclockwise

3.3.5 Lubrication: Continuously provided from the AMAD lubrication system through the starter (ATS) mounting pad and flowing through the ATS shaft and ports as shown on Figures 1 and 2. The AMAD/ATS pad shall be wet with the ATS having a dry sump with a dedicated positive scavenge connection to the AMAD. The scavenge port on the ATS shall Include a coarse mesh screen to prevent contaminants from entering the AMAD. Conditions existing at the AMAD/ATS pad to be as follows:

Oil flow at (50%) 12,600 rpm ATS speed - 1.6 gpm (.85 at pad, .75 at shaft)
Oil temperature at (50%) 12,600 rpm ATS speed - 180°F
Oil pressure at (45%) 11,350 rpm ATS speed and above - 40 psid
Maximum oil pressure - 280 psig
Maximum oil temperature - 250°F
Maximum ATS cavity pressure - 10 psid
Minimum scavenge to supply oil flow - 2:1

The starter shall be capable of satisfactory operation with random interruptions of oil flow of up to 30 seconds duration. Leakage of lubricants from the starter shall not exceed 2 cc/hour.

3.3.2 Exposure Temperature Range: -100 to 245°F

Downloaded from http://www.everyspec.com

REQUIREMENTS (cont'd)

Applicable paragraphs
of MIL-S-19557C(AS)

3.3.2 Ambient Temperature Operating Range: -40 to +125°F

3.3.2 External Surface Temperature: 400°F MAXIMUM
The maximum external surface or skin temperature shall not be exceeded during or following any starter operating condition. An external covering or insulating blanket(s) may be provided to satisfy this requirement.

3.4.1 Reliability: Specified mean time between failures shall be 5600 operating hours.

3.4.2 Maintainability: No scheduled or unscheduled maintenance shall be required as a result of starter design or quality for a minimum period of 3000 overrunning hours.

3.3.2.3 Control Valve:

4.5.1.1
4.5.6

Opening Rate, Max: 15 ±5 psig per sec.
Opening Time, Max: 5.0 sec.
Closing Time, Max: 1.0 sec.
Navy Model: Not assigned.

Performance: The starter shall be capable of providing the following output torques when supplied with the inlet conditions shown in Figure 3:

DRIVE SPEED RPM	ATS OUTPUT TORQUE (LB-FT) COLD DAY (-40°F)	STD. DAY (59°F)	HOT DAY (125°F)
7,500	84.1	81.9	71.6
15,000	" 22.0	23.9	20.0

3.5.1 Rated Conditions: (Minimum Allowable Performance for 59°F Standard Day Inlet Air Supply)
NOTE : Unless otherwise specified, tolerances applicable to pressure shall be ±1 PSIA and temperature ±15°F.

1. Main Engine Start/Motoring Mode:
Operating time - 2 minutes starting/10 minutes motoring MINIMUM
Output Drive Speed - (30%) 7500 rpm
Output Drive Torque - 100.6 lb-ft MINIMUM
Inlet Air Total Pressure - 55 psia
Inlet Air Total Temperature - 400°F
Inlet Air Flow - 142 lb/rein MAXIMUM

Downloaded from http://www.everyspec.com

REQUIREMENTS (cent'd)

Applicable paragraphs of MIL-S-19557C(AS)

2. Ground Maintenance Subsystem Check-Out Mode:
Operating time - Continuous
Output Drive Speed - (59%) 15,000 rpm
output Drive Torque - 18.6 lb-ft MINIMUM
Inlet Air Total Pressure - 46 psia
Inlet Air Total Temperature - 360°F
Inlet Air Flow - 122 lb/rein MAXIMUM

3. Cross Bleed Start:
Operating Time: 1 minute maximum
Inlet Air Total Pressure: 60 psia
Inlet Air Total Temperature: 1100°F
Inlet Air Flow: 142 lb/rein maximum

3.5.1 Cutout Speed: Primary cutout speed is (60%) 15,130 ±100 rpm controlled by aircraft electrical system. Secondary cutout speed is (64 ±1%) 16,140 ±250 rpm controlled via the starter output drive speed sensor signal fed to a remotely mounted frequency sensing relay (FSR).

3.5.7 Automatic Shutoff Control: Output drive speed sensor to be provided as shown on Figures 1 and 2 for control operation. The speed sensor should provide an output signal frequency of 6354 to 6556 HZ (24 tooth signal generator) at the secondary (64%) starter cutout speed. Minimum speed signal voltage output shall be 3.5 volts peak to peak at output drive speeds of 4290 rpm (17%) and above when measured with a resistive load of 1.5K OHMS and the speed sensor shimmed to the maximum allowable gap. The maximum peak to peak voltage output shall not exceed 30 volts.

3.5.8 Altitude: The starter shall operate satisfactorily up to and Including 25,000-ft altitude. The starter shall not be damaged when subjected to 75,000-ft altitude in the overrunning mode of operation.

3.5.9 Attitude: The starter shall be capable of operating In any flight attitude as shown in Figure 4.

4.2.2 Inspection/Acceptance Test: Additional test requirements are:

(1) Operate at Ground Maintenance Subsystem Check-out conditions per para. 3.5.1 for a minimum period of 30 minutes. During this period, conduct the following runs:

Downloaded from http://www.everyspec.com

REQUIREMENTS (cent'd)

Applicable paragraphs
of MIL-S-19557C(AS)

(a) Self-Induced Vibration: Vary starter output speed from 4290 (17%) .to 15,890 (63%) rpm. Record maximum vibration and the speed at which it occurs.

(b) Speed Sensor Voltage: Record the peak to peak voltage output from the speed sensor at starter output speeds of 4290 (17%) and 15,890 (63%) rpm. The voltage shall be within limits established by para. 3.5.7.

The speed signal is acceptable when all 24 pulses per revolution are present at the monopole output voltages and speeds shown below. Presence of all 24 pulses shall be determined with an oscilloscope, use of a worst case FSR as shown on Figure 5 (see Figure 6 for calibration procedure), or equivalent means.

DRIVE SPEED RPM	MONOPOLE OUTPUT VOLTAGE PEAK TO PEAK	
	MIN	MAX
2,860	3.5V	30.0
10,590	3.5	30.0

(c) Motoring Dwell: Set starter output speed of 7570 (30%) ±200 rpm, run for a minimum of 5 minutes and record all performance data. The limits shall be within limits established by para. 3.5.1(1).

(d) Ground Check-out Dwell: Set starter output speed of 15,000 (59%) ±200 rpm, run for a minimum of 15 minutes and record all performance data. The limits shall be within limits established by para. 3.5.1(2).

(2) Operate at Main Engine Start conditions per para. 3.5.1 and perform the following runs:

(a) Calibration: Run at stabilized starter output shaft speeds of 0 +200 rpm (stall condition) and 7500 (30%) rpm. Record all performance parameters. The torque/speed output shall be within the limits of para. 4.5.4(1).

(b) Run five main engine start cycles as per para. 4.5.6 except for elimination of phase B stabilized condition. Allow a minimum of 2 minutes between start cycles. Record time to starter cut out.

Downloaded from http://www.everyspec.com

REQUIREMENTS (cont'd)

Applicable paragraphs
of MIL-S-19557C(AS)

(3) Operate at Overrunning mode as per para. 4.5.9 for a minimum of 15 minutes except that attitude and temperatures can be fixed at the prevailing test conditions.

(4) Proof Spin Test - Prior to conducting any operational starter tests the following shall be accomplished on all high speed components:
Proof spin each turbine wheel for 10 sec. at the equivalent room temperature proof speed. The proof speed shall be above the maximum operating speed but below the minimum yield speed.

(5) Insulation Resistance - The insulation resistance test shall be performed in accordance with MIL-STD-202 Method 302 test condition B. The 500-volt potential shall be applied for a minimum of 2 minutes between all mutually insulated circuits and between all circuits tied together and the unit case or chassis. To preclude possible damage to the equipment, the insulation resistance test should always be performed prior to performing the dielectric test.

(6) Dielectric Test - The dielectric test shall be performed in accordance with MIL-STD-202 Method 301 at the test potential of 1050 volts. The test potential shall be maintained for 60 seconds minimum for each test point. The appropriate test potential shall be applied between all mutually insulated circuits.

(7) Proof Pressure - A proof pressure test shall be conducted to verify the requirements of 3.8.3.2. Pressure shall be maintained for 2 minutes. There shall be no evidence of damage, distortion, nor external leakage, and the unit shall subsequently meet the requirements of the calibration test.

4.5.3 Instrumentation

Add the following instrumentation parameters:

*J. Lubricant Pressure
*K. Lubricant Flow Centershaft and Oil Ferrule
*L. Self Induced Vibration
*M. Voltage Speed Sensor
*N. Frequency Speed Sensor

Downloaded from http://www.everyspec.com

REQUIREMENTS (cont'd)

Applicable paragraphs
of MIL-S-19557C(AS)

4.5.4 Initial Calibration: (at 59°F Standard Day Inlet Air Conditions)

NOTE: The performance rating torques do not include allowances for inlet pressure and temperature tolerances, steady state to transient torque correction, or simulated AMAD gearbox losses as required to reflect test conditions.

1. Main Engine Start Mode:

DRIVE TORQUE LB-FT	DRIVE SPEED RPM	DRIVE SPEED CONDITION	AIRFLOW LB/MIN
167 MIN.	0	Stall	142 MAX.
100.6 MIN.	7500 (30%)	Rated	142 MAX.
34.3 MIN.	15,000 (59%)	cutout	142 MAX.

2. Ground Maintenance Subsystem Check-Out Mode:

DRIVE TORQUE LB-FT	DRIVE SPEED RPM	DRIVE SPEED CONDITION	AIRFLOW LB/MIN
132.0 MIN.	0	Stall	122 MAX.
18.6 MIN.	15,000 (60%)	Rated	122 MAX.

4.5.5 No-Load Operation:
Time: 60 Seconds
Inlet Conditions:
Total Pressure 46 ±1 psia
Total Temperature 445 ±15°F
Minimum Output Drive Speed: 17,500 rpm

4.5.6 Endurance Test: Total operation to consist of: 6000 Main Engine Start cycles, 250 Main Engine Crossbreed start cycles, 750 Ground Maintenance Check-out cycles and 500 Motoring cycles. Cycles to be conducted at rated conditions of para. 3.5.1 as follows:

	(1) MAIN ENGINE START/						(2) CROSSBLEED START		
Test Stand Rotor Polar Moment of Inertia ±8.0 LB-FT^2	Phase A - Acceleration Drive Speed RPM ±50		Time Sec (TYP)	Phase B - Stabilized Conditions Drive Speed RPM ±50	Drive Torque LB-FT (MIN)	Time Sec	Phase C- Acceleration Drive Speed RPM (MIN)		Time Sec (TYP)
(1) 81.7	7500	(30%)	8	7500	(30%)	77	10	15,130 (60%)	31.5
(2) 81.7	7500	(30%)	8	7500	(30%)	--	10	15,130 (60%)	24

Downloaded from http://www.everyspec.com

REQUIREMENTS (cont'd)

Applicable paragraphs
of MIL-S-19557C(AS)

(3) Ground Maintenance.Subsystem Check-out:
With the test stand simulated engine inertia load flywheel disconnected, accelerate to 14,875 +250 (59 ±1%) rpm output speed drive speed; 18.6 lb-ft MINIMUM drive torque and operate for one hour as shown on Figure 7.

(4) Motoring: Accelerate and run for five minutes at the following stabilized conditions:

Test Stand Rotor Polar Moment of Inertia ±8.0 LB-FT^2	Drive Speed RPM ±50	Drive Torque LB-FT (MIN)
81.7	7500 (30%)	77

4.5.8 Rated Torque Calibration: (Rated conditions)
Output Drive Speed (rpm): 7500 (30%)
Maximum Airflow (lb per rein): 142

3.3.5 Overrunning: The starter output drive shall be driven for 6000 hours in a counterclockwise direction (viewed from the anti-output shaft end). The ambient air temperatures and attitudes (pitch and roll) shall vary in accordance with the following tabulation:

Time Minutes	Ambient Temperature ±10°F	Attitude Pitch +2°	Attitude Roll +2°
4	120	0	45 (left)
6	120	45 (climb)	o
4	120	o	90 (left)
1	120	90 (climb)	o
30	180	o	0
1	120	-90 (dive)	0
4	120	o	90 (right)
6	120	-45 (dive)	o
4	120	o	45 (right)

Downloaded from http://www.everyspec.com

REQUIREMENTS (cont'd)

Applicable paragraphs
of MIL-S-19557C(AS)

Attitude translations are to be completed within 30 seconds. Attitude positions refer to the starter anti-drive end horizontal centerline. The following parameters shall be stabilized during overrunning:

Drive Speed: (1) 25,200 ±200 (100%) rpm for 5000 hours
(2) 15,630 ±200 (62%) rpm for 1000 hours

Drive Pad Temperature: 150 ±10°F

The starter shall be continuously lubricated.

After 3000 hours of overrunning the starter shall be subjected to endurance operation consisting of:

1000 Main Engine Start Cycles
42 Crossbreed Start Cycles
125 Ground Maintenance Subsystem Checkout Cycles
83 Motoring Cycles

4.5.9 Interrupted Lubrication

The starter shall be capable of operating without damage when subjected to the following periods of interrupted lubrication while operating in the overrunning mode at 100% speed.

Time Period (SECS)	Flow (GPM)	No. of Repetitions
10	0.0	2400
20	0.0	900
30	0.0	300

Prior to and following this test calibrate the unit per para. 4.5.4

4.5.10 Extreme Temperature Operation:

Ambient Temperature °F ±5°	Inlet Air Conditions: Total Pressure In.Hg.A ±0.5	Inlet Air Conditions: Total Temperature °F
-40	112	249
160	94	384

Operate starter for three consecutive Main Engine Start cycles at each temperature.

Downloaded from http://www.everyspec.com

REQUIREMENTS (cont'd)

Applicable paragraphs of MIL-S-19557C(AS)	
4.5.11	Consecutive Cyclical Operation: Number of cycles: .5
4.5.12	Sustained Motoring: Engine Motoring Mode: 10 Minutes (MAXIMUM) Ground Maintenance Subsystem Check-out Mode: Continuous
4.5.13	Vibration: MIL-STD-810, Method 514, Procedure I, Curve F (Parts 1, 2 and 3)
4.5.15.1	Slip Clutch Torque: Continuous (LB-FT): 213 Minimum Overload (LB-FT): 243
4.5.15.2	Shear Section Strength, (LB-FT: 283 ±17
4.5.18	Containment Tests: Applicable
4.5.18.1	Hub Containment Test: Inlet Air Pressure (psia): 60 Inlet Air Temperature (°F): 1100
4.5.18.2	Failure at No-Load: (Axial Containment) Inlet Air Pressure (psia): 46 Inlet Air Temperature (°F): 445
3.5 4.5	Proof Pressure Test A proof pressure test shall be conducted to verify requirements of para. 3.8.3.2. Pressure shall be maintained for 2 minutes. There shall be no evidence of rupture or sudden loss of pressure.
3.5 4.5	Dielectric Test The dielectric test shall be performed in accordance with MIL-STD-202 Method 301 at the test potential of 1050 volts. The test potential shall be maintained for 60 seconds minimum at the test point. This potential shall be applied to one test specimen for 25 applications without failure.

Downloaded from http://www.everyspec.com

REQUIREMENTS (cont'd)

Applicable paragraphs
of MIL-S-19557C(AS)

3.3
3.3.2

Environmental Conditions

1. Dust. The starter shall be subjected to dust tests in both operating and nonoperating conditions. All cycles shall be conducted using rated conditions. Failure of the starter to meet the performance requirements of the specification sheet shall be cause for rejection.

a. Part I, Nonoperating. The starter shall be subjected to a dust test in accordance with Method 510, Procedure I, of MIL-STD-810 while the starter is inoperative.

b. Part II, Operating. The starter shall be cycled 50 times while being supplied with contaminated air in accordance with Method 510, Procedure I, of MIL-STD-810, except the air shall be supplied at rated inlet conditions.

2. Rain. The starter shall be subjected to a rain test in accordance with Method 506, Procedure I, of MIL-STD-810. Rated inlet conditions shall be used for the test cycles.

3. Funqus. The starter shall be subjected to a fungus test in accordance with Method 508, Procedure I, of MIL-STD-810. The starter shall be operated before and after the test at rated inlet conditions.

4. Salt foq. The starter shall be subjected to a 50-hour salt fog test in accordance with Method 509, Procedure I, of MIL-STD-810. The starter shall be operated before and after the test period as specified in MIL-STD-810. Rated inlet conditions shall be used for all cycles.

5. Humidity. The starter shall be subjected to a humidity test consisting of 50 cycles (each cycle shall consist of varying the humidity from 40 to 95 to 40 percent within 30 minutes while maintaining a temperature of 125° ±25°F) (52° ±14°C). The equipment specified in MIL-STD-810, Method 507, shall be utilized. The starter shall be operated before and after the test. At the end of the test the starter shall be subjected to an ambient temperature of -40 ±5°F for 5 hours without drying, shaking, or other wise removing condensed water from the starter.

Downloaded from http://www.everyspec.com

REQUIREMENTS (cont'd)

Applicable paragraphs
of MIL-S-19557C(AS)

At the end of the 5-hour cold soak period, the starter shall be operated for one cycle. Rated inlet air conditions shall be used for all cycles. The starter shall be mounted in the actual aircraft orientation during this test to allow for normal drainage.

Preparing Activity:
Navy - AS
(Project No. 2995-N156)

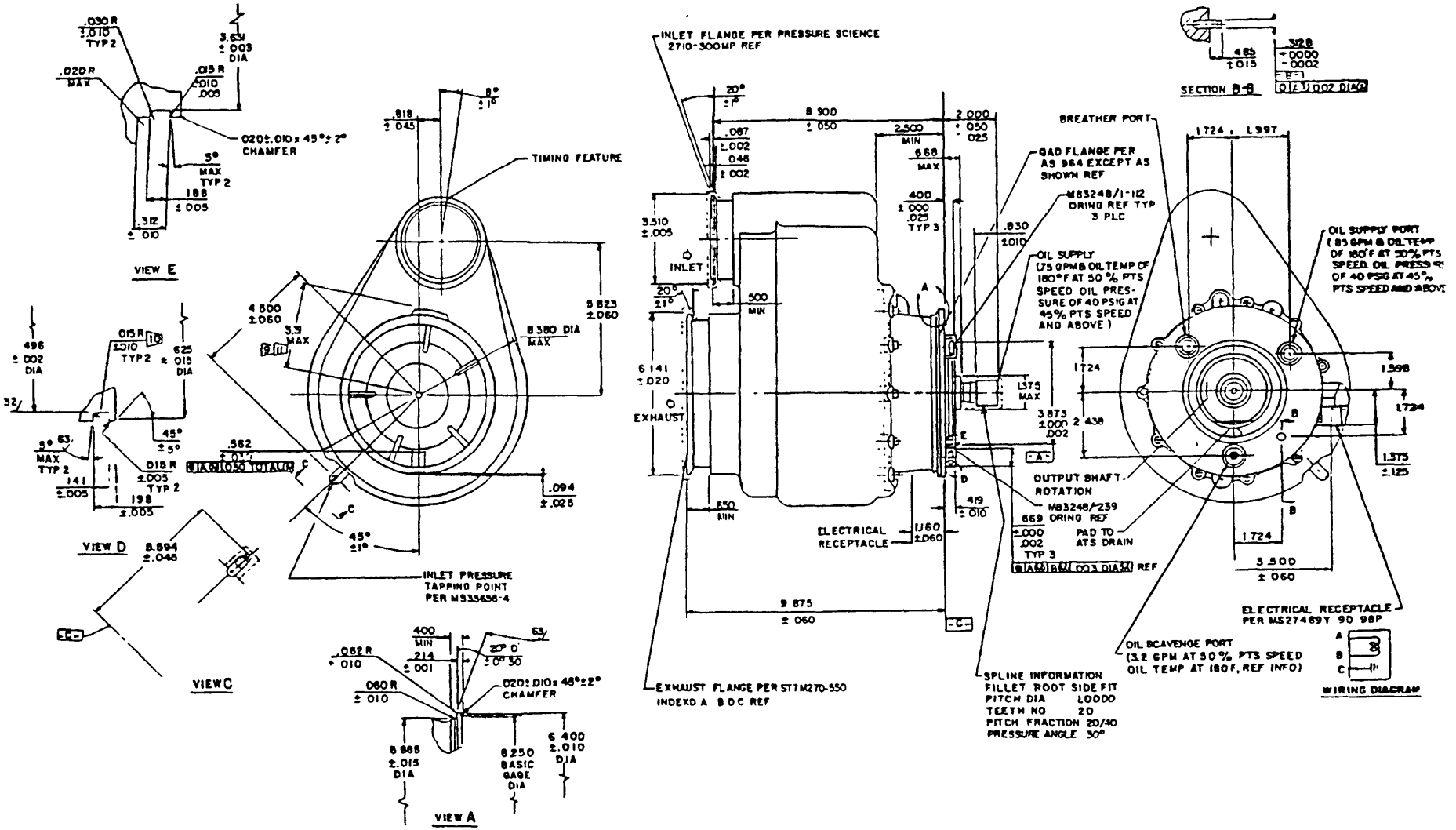

FIGURE 1. Starter outline

Downloaded from http://www.everyspec.com

Downloaded from http://www.everyspec.com

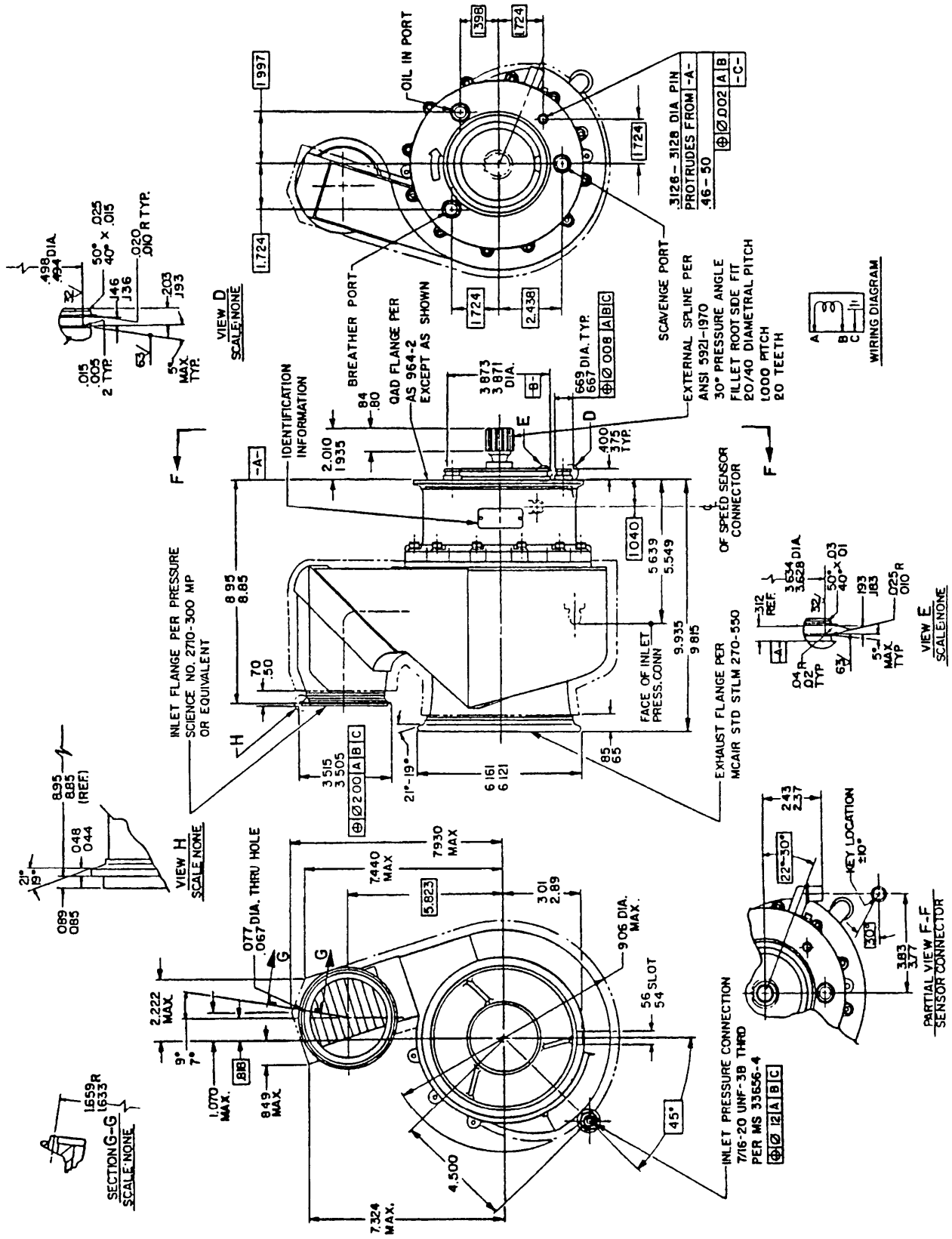

FIGURE 2. Starter outline

Downloaded from http://www.everyspec.com

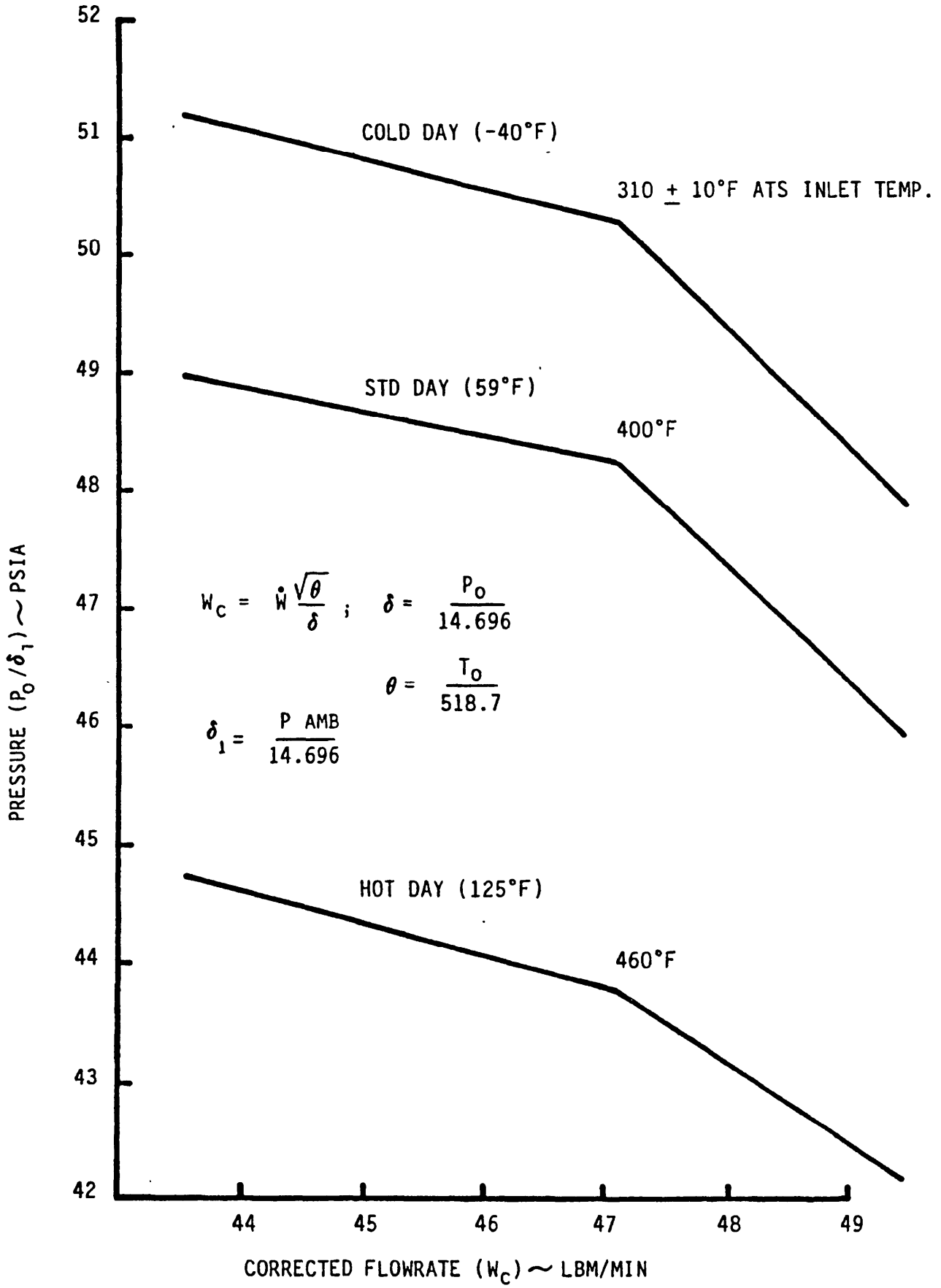

FIGURE 3. ATS inlet conditions for APU assisted MES.

Downloaded from http://www.everyspec.com

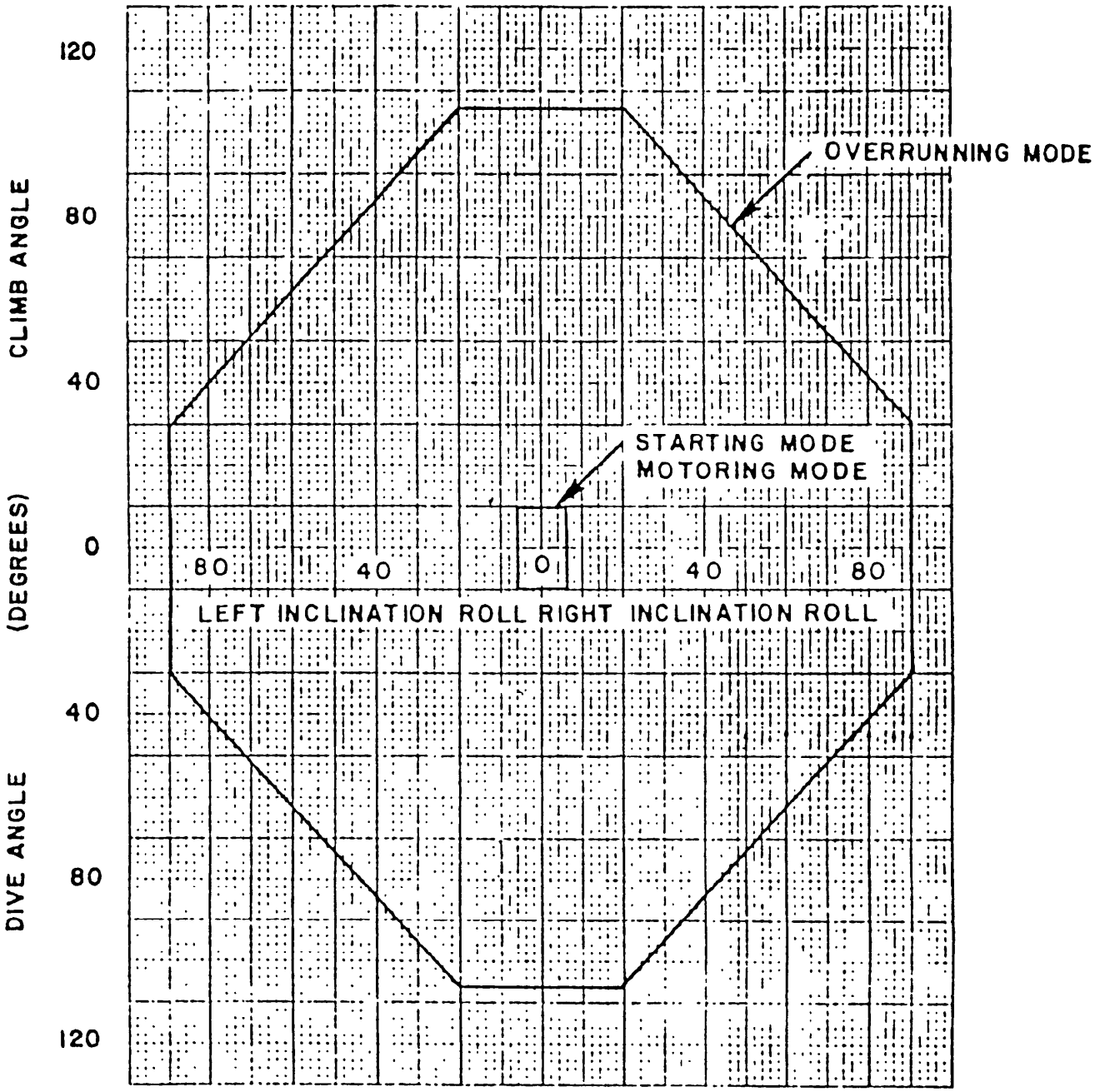

NOTES:

(1) Figure assumes no acceleration except gravity.
(2) Momentary zero "G."
(3) 30 seconds at negative "G."

FIGURE 4. Flight attitudes

Downloaded from http://www.everyspec.com

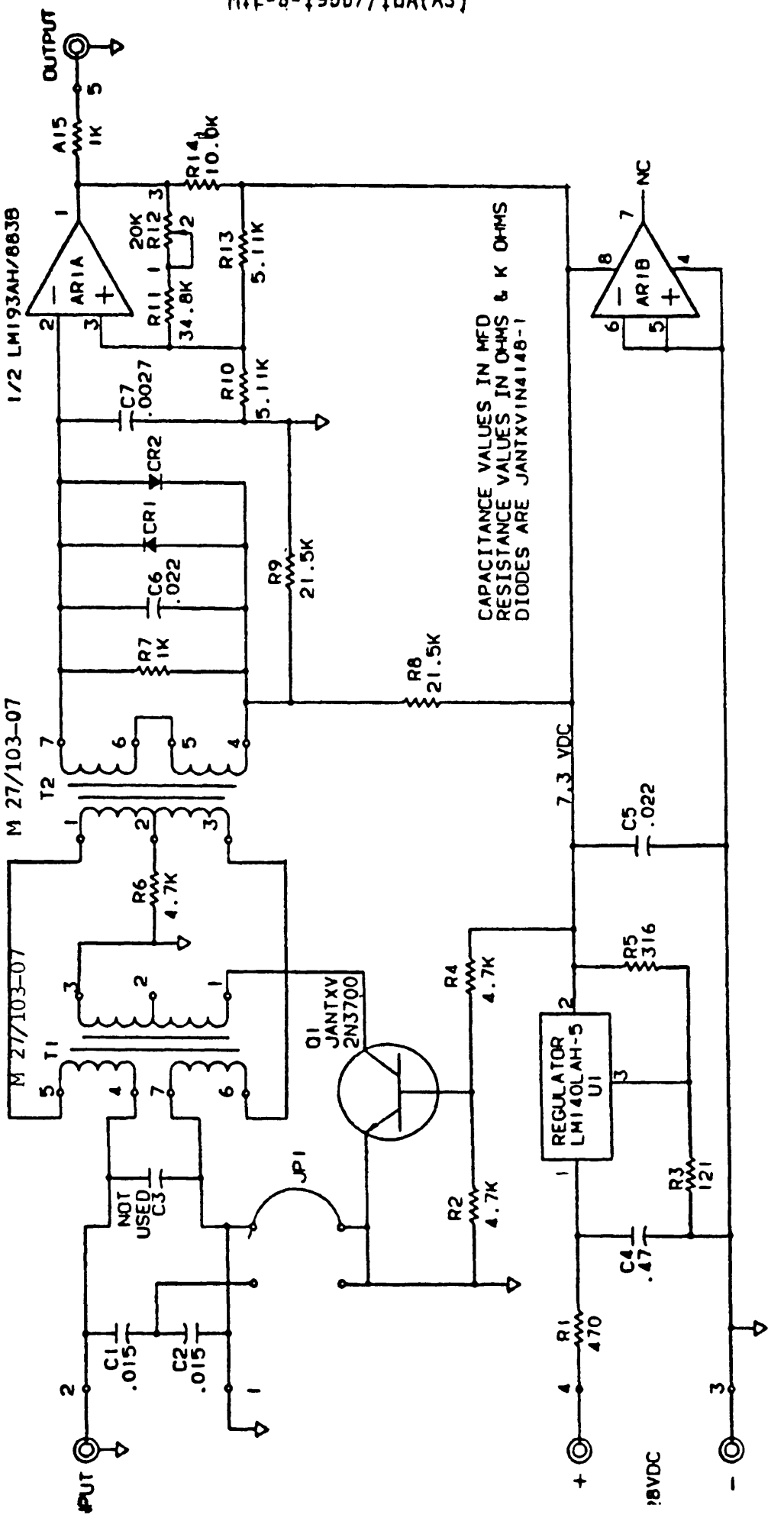

FIGURE 5. Electrical schematic

Downloaded from http://www.everyspec.com

1.0 PURPOSE

The purpose of the test set, during-testing of the Air Turbine Starter (ATS), is to assure adequacy of the speed signal for operation of the frequency sensing relay (FSR).

2.0 ELECTRICAL REQUIREMENTS

Power Input: 24 to 28 VDC
Signal input: Speed signal from ATS
Signal output: 7.3 volt pulses at speed signal frequency

2.1 The test set simulates the input circuit of the FSR and utilizes FSR components. Input capacitors simulate connector filter pin capacitances of the FSR and MSDC.

2.2 Signal threshold is adjusted to a higher level than in the FSR. Therefore, adequacy of the ATS speed signal is assured, if all 24 pulses per revolution appear at the test set output. The curve below shows test set frequency (speed) threshold requirements.

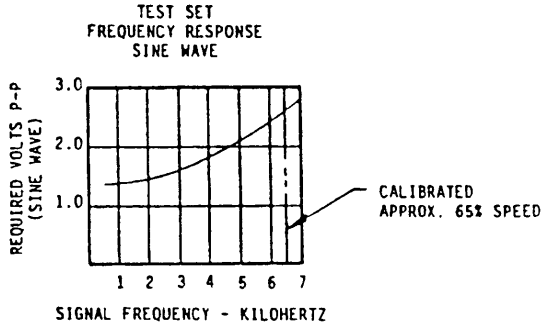

3.0 ATS TESTING REQUIREMENTS

3.1 Test speeds are specified in the test procedure for the ATS. One speed shall be at 65% (FSR cutoff).

3.2 The speed signal is acceptable when all 24 pulses per revolution are present at the test set output. Presence of all 24 pulses shall be determined with an oscilloscope or other equivalent means.

4.0 TEST SET CALIBRATION PROCEDURE

The following procedure shall be used for periodic calibration of the test set.

4.1 Connect a 26.0 ±0.5 VDC power supply to the 28 VDC input.

4.2 Connect an oscilloscope to the output and a sine wave oscillator to the input with suitable instrument to measure input voltage.

4.3 Adjust the oscillator frequency to 6500 + 5 HZ and amplitude to 3.0 to 3.5 VPP (1.06 to 1.24 YRMS). Adjust the oscilloscope to indicate the output pulses.

4.4 Slowly decrease the oscillator amplitude until the output pulses disappear. Then slowly increase the amplitude and determine the minimum input amplitude (at 6500 HZ) which will produce all pulses at the output. The minimum amplitude shall be 2.56 to 2.62 volts P-P (0.905 to 0.926 volts RMS). If not within requirement remove the cover and adjust R12 to bring within tolerance.

4.5 Using the method of 4:4 determine the minimum input amplitude at 1000 HZ. It shall be 1.24 to 1.52 volts P-P (0.438 to 0.537 volts RMS). Do not adjust.

FIGURE 6. Test set specification.

Downloaded from http://www.everyspec.com

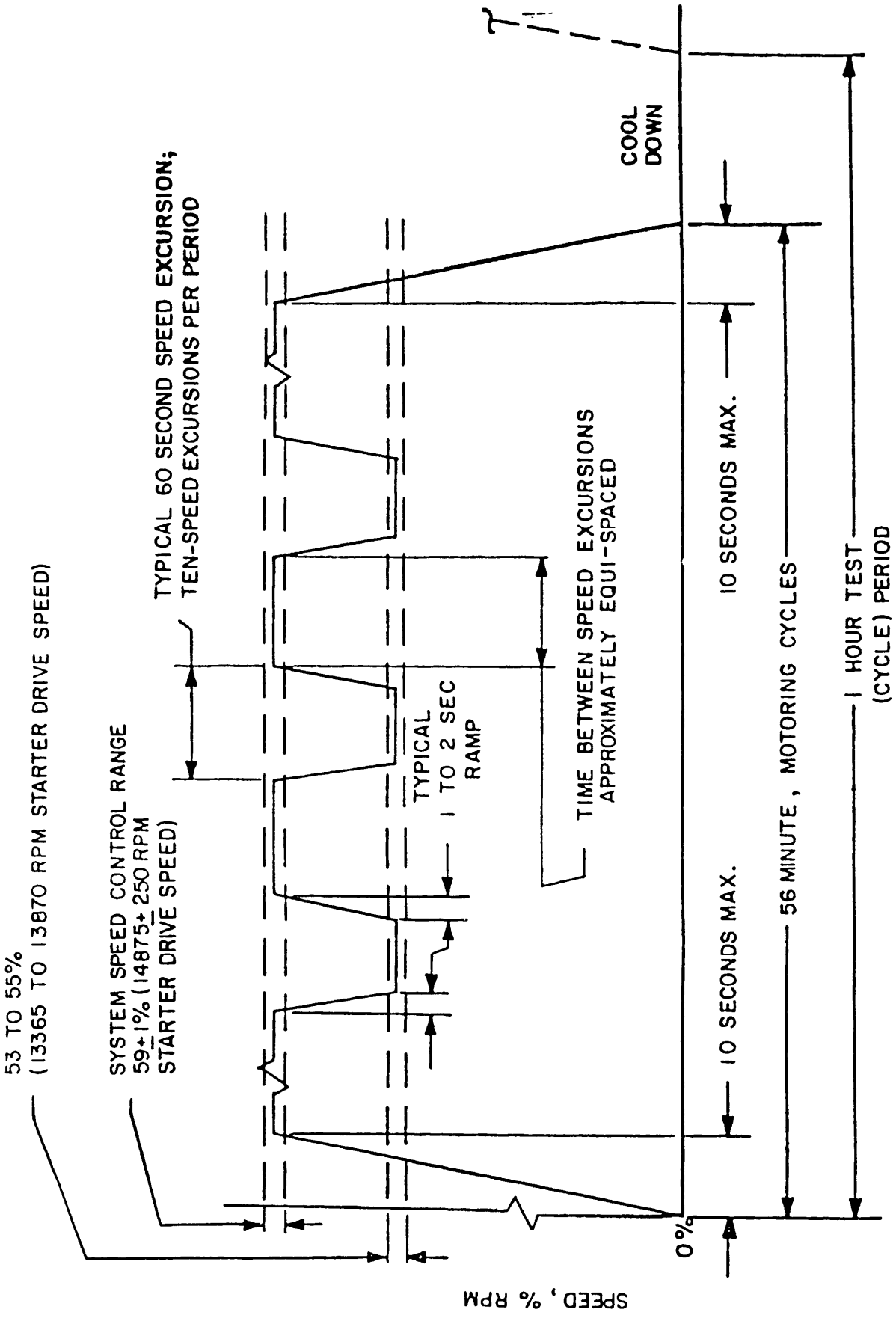

FIGURE 7. Ground maintenance subsystem checkout test cycle.