MILITARY SPECIFICATION SHEET

(A) SWITCHING EQUIPMENT, COMBAT SYSTEM, COMMAND AND CONTROL, FIRE CONTROL AND INTERIOR COMMUNICATION SWITCHBOARD, SURFACE SHIP, DECK-MOUNTED (PLUG-CONNECTED), TYPE IV

This specification sheet is approved for use by the Naval Sea Systems Command, Department of the Navy, and is available for use by all Departments and Agencies of the Department of Defense.

The complete requirements for acquiring the switchboard described herein shall consist of this document and the latest issue of MIL-S-17000.

REQUIREMENTS:

Switchboard section arrangement: Each switchboard section shall be arranged as shown on figure 1. The front section shall provide space for 36 panel-mounted assemblies mounted on a door hinged on one side and latched on the other. The back section shall contain seven modules.

Size: Size of the switchboard section shall be as shown on figure 1.

Mounting: Switchboard enclosures shall be provided with mounting bolt clearance holes as shown on figure 1.

Modules: Back section modules shall be arranged and mounted as shown on figure 1. Top module (module A) shall contain 12 connector receptacles conforming to MIL-C-28748/9 (part number M28748/09FONO1A) for connection of intersection wiring between sections. The six lower modules (modules B through G) shall contain the required connector receptacles conforming to MS3402 for ship cables, 16 taper pin blocks conforming to requirement 3 of MIL-STD-1657, or 16 terminal junction systems conforming to requirement 4 of MIL-STD-1657, or 22 terminal boards (type 7TB12) conforming to MIL-T-55164/13 as specified in the acquisition technical data package (or a combination of taper pin blocks or terminal junction systems with terminal boards as required) and three connector receptacles conforming to MIL-C-28748/9 (part number M28748/09FONO1A). Ship cable connector receptacles shall be mounted on the top of removable plates. These plates shall be mounted on the bottom of the module with the heads of the receptacle securing screws on the bottom of the module. Keyway of the ship cable connector receptacles shall be located

(A) denotes changes.

FSC 1290

towards the front of the switchboard. The 16 taper pin blocks shall be arranged in four rows of four blocks per row. The 16 terminal junction systems shall be arranged in four rows of four tracks per row. The 22 terminal boards shall be arranged as shown on sheet 2 of figure 1. The use of a single mounting bracket for two tracks of terminal junction system modules is preferable. The harness connector receptacles shall be located in a vertical row on the end of the module closest to the door hinge. The front panel of these modules shall be hinged on the bottom edge. The hinge shall permit the front panel to open to a maximum of 130 degrees. The front panel shall be held in an upright position by captive screw-type fasteners made of corrosion-resistant steel type 303 and with a screw thread size of 1/4-20. The horizontal edge of the module shall be covered with insulation material to prevent chafing of ship cables.

Module taper pin, terminal junction system, and terminal board numbering: Modules, taper pin blocks, terminal junction systems, and terminal boards shall be numbered as shown on figure 1.

Module B through G wiring arrangement: Module B through G wiring arrangement shall be in accordance with the following:

(a) Ship cables shall terminate in connector plugs in accordance with MS3406 with 45 degree strain relief clamps in accordance with MS3415.
(b) Only wiring for active circuits shall be installed from the ship cable connector receptacles to the module connection point and to the harness wiring connector receptacles.
(c) Wiring to and from the taper pin blocks shall be arranged as shown in requirement 3 of MIL-STD-1657. Wiring to and from the terminal junction systems shall be arranged as shown in requirement 4 of MIL-STD-1657. Wiring from the ship cable connector receptacles shall be connected to the front of the terminal boards. All other module wiring shall be connected to the back of the terminal boards.
(d) Adequate slack shall be left in the wiring to the taper pin blocks , terminal junction system, or terminal boards from the ship connectors and the module connectors to permit the front panel of the module to swing down to a 130-degree opening.
(e) Whenever conductors of ship cables have to terminate in more than one switchboard section, they shall be connected to a terminal point in the module where the ship cables terminate. They then shall be routed to the connector receptacles in the top (a) module and through intersection wiring to other sections as required.

Preparing activity:
Navy - SH
(Project 1290-N379)

☆ U.S. GOVERNMENT PRINTING OFFICE: 1983-605-034/2569

NOTES:

1. ALL DIMENSIONS ARE IN INCHES.
2. METRIC EQUIVALENTS ARE GIVEN FOR GENERAL INFORMATION ONLY AND ARE BASED UPON 1 INCH = 25.4 mm. DIMENSIONS IN [ ] ARE MILLIMETERS.
3. UNLESS OTHERWISE SPECIFIED, TOLERANCES SHALL BE .XX ± .03, .XXX ±.010, AND ANGLES ± 30'.
4. INTERIOR AND EXTERIOR SURFACES OF ENCLOSURE SHALL BE PAINTED IN ACCORDANCE WITH REQUIREMENTS OF MIL-S-17000.
5. STRUCTURE SHALL BE IN ACCORDANCE WITH MIL-S-17000.
6. RESTRAINING LANYARD SHALL BE INSTALLED TO LIMIT MODULE TO 130° OPEN POSITION.
7. THE GEOMETRIC CHARACTERISTIC SYMBOLS USED ON THIS FIGURE ARE DEFINED IN ANSI Y14.5.

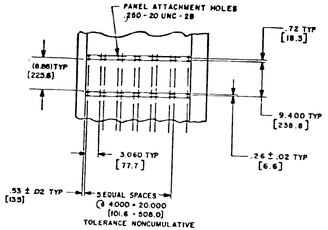

VIEW B-B

PARTIAL DETAIL FOR PANEL ATTACHMENT (PANELS REMOVED)

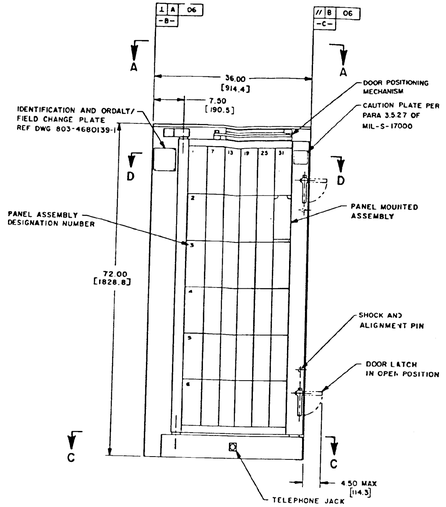

FRONT VIEW

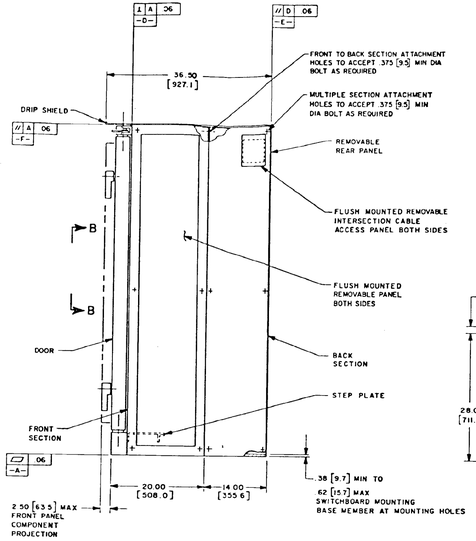

SIDE VIEW

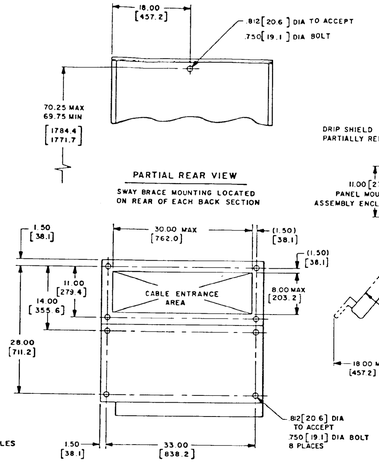

SECTION C-C

MOUNTING HOLE PATTERN
PRIMARY STRUCTURE DELETED FOR CLARITY

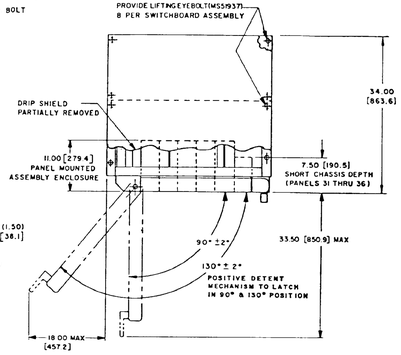

VIEW A-A

FIGURE 1. Switchboard type IV (sheet 1 of 2).

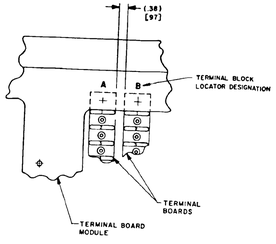

DETAIL A

TYPICAL NOMENCLATURE LOCATION FOR MODULES "B" THRU "G"

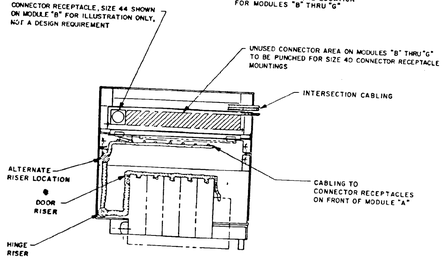

SECTION D-D

SH 11500-1

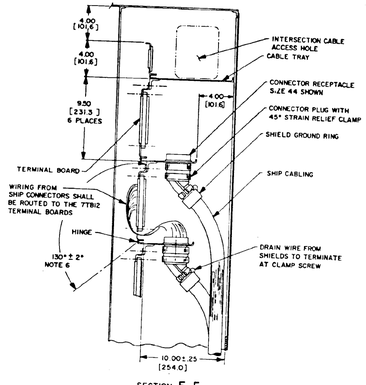

SECTION F-F

MODULE "A" AND MODULES "B" THRU "G" MOUNTING SURFACES

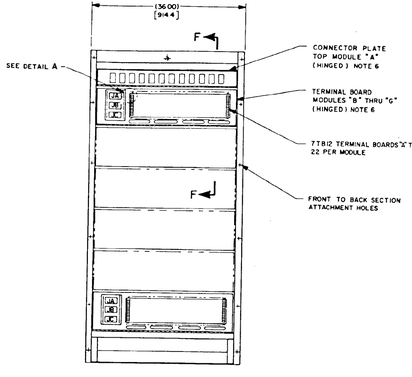

FRONT VIEW OF BACK SECTION
FRONT SECTION REMOVED

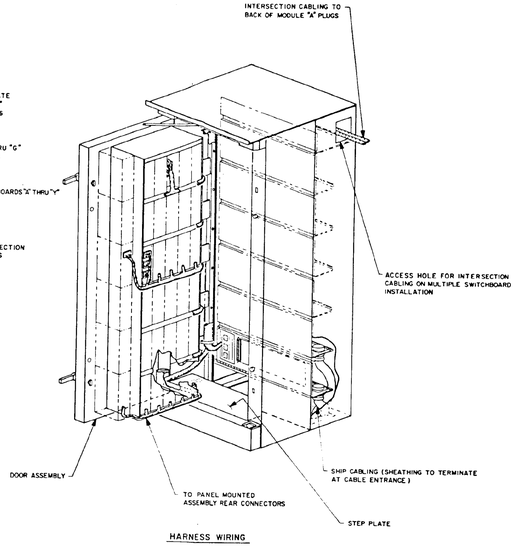

HARNESS WIRING

FIGURE 1. Switchboard type IV (sheet 2 of 2).