MIL-S-17000N(SH)
2 May 1983
SUPERSEDING
MIL-S-17000M(SH)
30 April 1980
MIL-S-15001G(SHIPS)
28 September 1965
(See 6.7)

MILITARY SPECIFICATION

SWITCHING EQUIPMENT, COMBAT SYSTEM, COMMAND AND CONTROL, FIRE CONTROL, AND INTERIOR COMMUNICATION GENERAL SPECIFICATION FOR

This specification is approved for use by the Naval Sea Systems Command Department of the Navy, and is available for use by all Departments and Agencies of the Department of Defense.

1. SCOPE

101 Scope. This specification covers the general design requirements, operating conditions, and tests for Naval shipboard switching equipment (see 6.1).

1.2 Classification. Switching equipment consists of switchboards and control indicators. Detail design requirements will be specified for each acquisition of this equipment to suit the requirements of the specific control systems.

1.2.1 Switchboards. Switchboards shall be of the following types as specified (see 3.1 and 6.2.1):

Type II - Switchboard, surface ship, deck-mounted, (terminal board connected) .
Type III - Switchboard, surface ship, bulkhead-mounted (terminal board connected).
Type IV - Switchboard, surface ship, deck-mounted, (plug connected).
Type V - Switchboard, surface ship, bulkhead-mounted, (plug connected).
Type VI - Switchboard, surface ship, deck-mounted, two separate sections, (terminal board and plug connected).
Type VII - Switchboard, surface ship, deck-mounted, power distribution, (terminal board connected).

Beneficial comments (recommendations, additions, deletions) and any pertinent data which may be of use in improving this document should be addressed to: Commander, Naval Sea Systems Command, SEA 55Z3, Department of the Navy, Washington, DC 20362 by using the self-addressed Standardization Document Improvement Proposal (DD Form 1426) appearing at the end of this document or by letter.

FSC 1290

Type VIII - Switchboard, surface ship, deck-mounted, digital switching, (plug connected).
Type IX - Switchboard, submarine, (as specified in the acquisition technical data package).
Type X - Switchboard, surface ship, deck-mounted, interior communication, (terminal board connected).
Type XI - Switchboard, surface ship, bulkhead-mounted, interior communication, (terminal board connected).
Type XII - Switchboard, submarine, deck-mounted, command and control (plug connected).

1.2.2 Switching control. Control indicator shall be as specified (see 3.1 and 6.2.1).

2. APPLICABLE DOCUMENTS

2.1 Government documents.

2.1.1 Specifications, standards, and handbooks. Unless otherwise specified, the following specifications, standards, and handbooks of the issue listed in that issue of the Department of Defense Index of Specifications and Standards (DoDISS) specified in the solicitation form a part of this specification to the extent specified herein.

SPECIFICATIONS

FEDERAL

L-P-387 - Plastic Sheet, Laminated, Thermosetting (for Designation Plates).
QQ-A-200 - Aluminum Alloy, Bar, Rod, Shapes, Structural Shapes, Tube and Wire, Extruded: General Specification for.
QQ-A-225 - Aluminum and Aluminum Alloy Bar, Rod, Wire, or Special Shapes; Rolled, Drawn, or Cold Finished; General Specification for.
QQ-A-250 - Aluminum and Aluminum Alloy Plate and Sheet: General Specification for.
QQ-A-591 - Aluminum Alloy Die Castings.
QQ-A-596 - Aluminum Alloy Permanent and Semipermanent Mold Castings.
QQ-A-601 - Aluminum Alloy Sand Castings.
QQ-C-320 - Chromium Plating (Electrodeposited).
QQ-C-591 - Copper-Silicon, Copper-Zinc-Silicon, and Copper-Nickel-Silicon Alloys: Rod, Wire, Shapes, Forgings, and Flat Products (Flat Wire, Strip, Sheet, Bar, and Plate).
QQ-W-423 - Wire, Steel, Corrosion-Resisting.
MMM-A-121 - Adhesive, Bonding Vulcanized Synthetic Rubber to Steel.
PPP-B-601 - Boxes, Wood, Cleated-Plywood.
PPP-B-621 - Boxes, Wood, Nailed and Lock-Corner.

MILITARY

MIL-C-5/l	- Capacitors, Fixed, Mica Dielectric, Style CM 15.
MIL-C-17	- Cables, Radio Frequency, Flexible and Semirigid, General Specification for.
MIL-T-27	- Transformers and Inductors (Audio, Power, and High-Power Pulse), General Specification for.
MIL-P-116	- Preservation, Methods of.
MIL-I-631	- Insulation, Electrical, Synthetic-Resin Composition, Nonrigid.
MIL-S-901	- Shock Tests, H.I. (High-Impact); Shipboard Machinery, Equipment and Systems, Requirements for.
MIL-C-915	- Cable and Cord Electrical, For Shipboard Use General Specifications for.
MIL-C-915/28	- Cable, Electrical, 1000 Volts, Type SSGU.
MIL-C-915/29	- Cable, Electrical, 1000 Volts, Type DSGU.
MIL-c-915/30	- Cable, Electrical, 1000 Volts, Type TSGU.
MIL-c-915/31	- Cable, Electrical, 1000 Volts, Type FSGU.
MIL-C-915/60	- Cable, Electrical, 600 Volts, Types 2SJ, 3SJ, and 4SJ.
MIL-C-915/63	- Cable, Electrical, 300 Volts, Type 2U.
MIL-I-1361	- Instrument Auxiliaries, Electrical Measuring: Shunts, Resistors, and Transformers*
MIL-C-2212	- Controllers, Electric Motor A.C. or D.C., and Associated Switching Devices.
MIL-L-3661	- Lampholders, Indicator Lights, Indicator-Light Housings, and Indicator-Light Lenses, General Specification for.
MIL-L-3661/60	- Lights, Indicator (Transformer), Style LH93.
MIL-L-3661/61	- Lampholder, Lights, Indicator (Housing), Style LH94.
MIL-L-3661/62	- Lampholder, Lights, Indicator (Housing), Style LH95 (for D.C. Applications).
MIL-L-3661/63	- Lampholder, Lights, Indicator (Housing), Style LH96.
MIL-L-3661/64	- Lampholder, Lights, Indicator (Housing), Style LH97.
MIL-L-3661/65	- Lampholder, Lights, Indicator (Housing), Style LH98.
MIL-S-3950	Switches, Toggle, Environmentally Sealed, General Specification for.
MIL-C-5015	Connectors, Electrical, Circular Threaded, AN Type, General Specification for.
MIL-B-5423	Boots , Dust and Water Seal (for Toggle and Push-button Switches, Circuit Breakers, and Rotary-Actuated Parts), General Specification for.
MIL-P-5425	Plastic Sheet, Acrylic, Heat Resistant.
MIL-C-5541	Chemical Conversion Coatings on Aluminum and Aluminum Alloys.
MIL-B-5687	Bearings, Sleeve; Washers, Thrust; Sintered, Metal Powder, Oil-Impregnated.
MIL-R-5757	Relays, Electromagnetic, General Specification for.
MIL-R-6106	Relays, Electromagnetic, Including Establishing Reliability (ER Types), General Specification for.
MIL-L-6363	Lamps, Incandescent, Aviation Service, General Specification for.
MIL-T-7928	Terminals, Lug: Splices, Conductor: Crimp Style, Copper, General Specification for.

MIL-T-7928/l - Terminals, Lug and Splices, Conductor, Crimp Style, Copper Terminal, Lug, Crimp Style, Copper, Insulated, Ring Tongue, For Thin Wall Wire, Type 11 Class I For 105°C Total Conductor Temperature.

MIL-T-7928/2 - Terminals, Lug and Splices, Conductor, Crimp Style, Copper, Insulated, Rectangular Tongue, For Thin Wall Wire, Type II Class 1 for 105°C Total Conductor Temperature.

MIL-T-7928/3 - Splice, Conductor, Electric, (Permanent, Crimp-Style, Copper, Insulated, Type II, Class 1).

MIL-T-7928/5 - Terminals, Lug and Splices, Conductor, Crimp Style, Splice, Electric, (Permanent, Type II, Class 1) For 105°C Total Conductor Temperature.

MIL-W-8604 - Welding, Fusion; Aluminum A11oys; process and Performance of.

MIL-S-8805 - Switches and Switch Assemblies, Sensitive, and Push (Snap Action), General Specification for.

MIL-S-12883 - Sockets and Accessories for Plug-in Electronic Components, General Specification for.

MIL-P-13949 - Plastic Sheet, Laminated, Metal Clad (For Printed Wiring Boards), General Specification for.

MIL-P-15024 - Plates, Tags and Bands for Identification of Equipment.

MIL-P-15024/5 - Plates, Identification.

MIL-L-15098 - Lamps. Glow General Specification for.

MIL-L-15098/11 - Lamps, Glow, Indicator, Types C7A, C9A, AIG, and AIH.

MIL-F-15160/3 - Fuses; Instrument, Power, and Telephone (Non-Indicating), Style F03.

MIL-F-15160/77 - Fuses (Indicating), Style F77A.

MIL-S-15291 - Switches, Rotary, Snap Action and Detent/Spring Return Action General Specification for.

MIL-A-15303 - Audible Signals: Alarms, Bells, Buzzers, Horns, Sirens, and Electronic Shipboard.

MIL-M-15562 - Matting or Sheet, Floor Covering, Insulating for High Voltage Application.

MIL-M-16125 - Meters, Electrical, Frequency.

MIL-T-16366 - Terminals, Electrical Lug and Conductor Splices, Crimp-Style.

MIL-F-16377 - Fixtures, Lighting; and Associated Parts; Ship-board Use, General Specification for.

MIL-F-16377/4 - Light, Fluorescent, Detail Lighting for Secretary Bureau, 8 Watts, 115 Volts, 60 Hertz Alternating Current, Symbol 142.2.

MIL-F-16377/46 - Fixtures, Light, Ballast Box, for One 8 Watt Fluorescent Lamp, T-5, Symbol 514.

MIL-E-16400 - Electronic, Interior Communication and Navigation Equipment, Naval Ship and Shore: General Specification fOr.

MIL-W-L6878 - Wire, Insulated, General Specification for.

MIL-W-16878/17 - Wire, Electrical, Polyvinyl Chloride (PVC) Insu-lated, 105°C, 600 Volts, Polyamide Jacket.

MIL-W-16878/18 - Wire, Electrical, Polyvinyl Chloride (PVC) Insulated, 105°C, 1000 Volts, Polyamide Jacket.
MIL-W-16878/19 - Wire, Electrical, Polyvinyl Chloride (PVC) Insulated, 105°C, 3000 Volts, Polyamide Covering.
MIL-R-16999 - Remote-Operated Switch Assemblies.
MIL-C-17361 - Circuit Breakers, Air, Electric, Insulated Housing (Shipboard Use).
MIL-C-17588 - Circuit Breakers (Automatic-ALB-1) and Switch, Toggle (Circuit Breaker, Non Automatic-NLB-l), Air, Insulated Housing, 125 Volts and Below, A.C. and D.C., (Naval Shipboard Use).
MIL-S-17773 - Switching Unit, Power Transfer (Bus Transfer) (Naval Shipboard Use).
MIL-S-18396 - Switches, Meter and Control, Naval Shipboard.
MIL-F-19207 - Fuseholders, Extractor Post Type, Blown Fuse Indicating and Nonindicating General Specification for.
MIL-F-19207/l - Fuseholders, Extractor Post Type, Blown Fuse Indicating, Type FHL1OU.
MIL-F-19207/18 - Fuseholders, Extractor Post Type, Blown Fuse Indicating, Type FHL29G.
MIL-F-19207/38 - Fuseholders, Extractor Post Type, Blown Fuse Indicating, Type FHL57G.
MIL-A-21180 - Aluminum-Alloy castings, High strength"
MIL-S-21604 - Switches, Rotary, Multipole and Selector; General Specification for.
MIL-S-21604/2 - Switch, Rotary, Multipole and Selector, 5 Ampere, Style JK.
MIL-E-22118 - Enamel, Electrical-Insulating.
MIL-S-22473 - Sealing, Locking, and Retaining Compounds; Single-Component.
MIL-S-22710 - Switches, Rotary (Printed Circuits), (Thumbwheel and Pushbutton), General Specification for.
MIL-S-22885 - Switch, Push Button, Illuminated, General Specification for.
MIL-I-23053 - Insulation Sleeving, Electrical, Heat Shrinkable, General Specification for.
MIL-I-23053/5 - Insulation Sleeving, Electrical, Heat Shrinkable, Polyolefin, Flexible, Crosslinked.
MIL-M-23167 - Meter, Frequency, Expanded Scale Switchboard Type (Naval Shipboard Use).
MIL-S-23190 - Straps, Clamps, and Mounting Hardware, Plastic for Cable Harness Tying and Support.
MIL-C-24105 - Converters, Synchro Signal (Panel Mounted).
MIL-S-24187 - Switch Assemblies, Linear Movement, Manual and Remote Operation, General Specification for.
MIL-S-24187/l - Switch Assemblies, Linear Movement, Manual and Remote Operation, Style LS*
MIL-S-24187/2 - Switch Assemblies, Linear Movement, Manual Operation, Style BLS.
MIL-S-24187/3 - Switch Assemblies, Linear Movement, Manual Operation, Style CLS.
MIL-S-24187/4 - Switch Assemblies, Linear Movement, Manual and Remote Operation, Style DLS.

MIL-S-24187/5 - Switch Assemblies, Linear Movement, Manual Operation, Style JLS.
MIL-S-24187/6 - Switch Assemblies, Linear Movement, Manual and Remote Operation, Snap-Action, Style SLS.
MIL-S-24187/7 - Switch Assemblies, Linear Movement, Manual Operation, Style KLS.
MIL-T-24558 - Terminal Boxes, Connection for Electrical and Electronic Systems, General Specification for.
MIL-T-24558/18 - Terminal Boxes, Connection, Submersible (15-Foot), 600 Volts, 4-Terminal, 8-Wire, Symbols 400.1 and 400.4, 4-Terminal, 12-Wire, Symbols 400.2 and 400.3.
MIL-B-26195 - Boxes, Wood-Cleated, Skidded, Load-Bearing Base.
MIL-C-28731 - Connectors, Electrical, Rectangular, Removable Contact, Formed Blade, Fork Type (for Rack and Panel and Other Applications), General Specification for.
MIL-C-28731/23 - Connector, Electrical, Contact, Fork Type, Removable, Double Wire Crimp.
NIL-C-28748 - Connectors, Electrical, Rectangular, Rack and Panel, Solder Type and Crimp Type Contacts General Specification for.
MIL-C-28748/9 - Connectors, Electrical, Rectangular, Rack and Panel, Polarized Center Jackscrew or Guidepin Style, Crimp Type Removable Pin Contacts, Size 16.
MIL-C-28748/10 - Connectors, Electrical, Rectangular, Rack and Panel, Polarized Center Jackscrew or Guidepin Style, Crimp Type Removable Socket Contacts, Size 16.
MIL-C-39012 - Connectors, Coaxial, Radiofrequency; General Specification for.
MIL-C-39029 - Contacts, Electrical Connector, General Specification for.
MIL-P-55110 - Printed-Wiring Boards.
MIL-T-55164 - Terminal Boards, Molded, Barrier, Screw and Stud Types, and Associated Accessories, General Specification for.
MIL-M-81531 - Marking of Electrical Insulating Materials.

(See Supplement 1 for list of associated specification sheets.)

STANDARDS

FEDERAL

FED-STD-595 - Colors.

MILITARY

MIL-STD-104 - Limits for Electrical Insulation Color.
MIL-STD-108 - Definitions of and Basic Requirements for Enclosures for Electric and Electronic Equipment.
MIL-STD-129 - Marking for Shipment and Storage.

MIL-STD-167-1 - Mechanical Vibrations of Shipboard Equipment (Type I - Environmental and Type II - Internally Excited).
MIL-STD-242 - Electronic Equipment Parts Selected Standards.
MIL-STD-275 - Printed Wiring for Electronic Equipment.
MIL-STD-454 - Standard General Requirements for Electronic Equipment.
MIL-STD-794 - Parts and Equipment, Procedures for Packaging of.
MIL-STD-889 - Dissimilar Metals.
MIL-STD-965 - Parts Control Program.
MIL-STD-1303 - Painting of Naval Ordnance Equipment.
MIL-STD-1310 - Shipboard Bonding, Grounding, and Other Techniques for Electromagnetic Compatibility and Safety.
MIL-STD-1399, Section 204 - Interface Standard for Shipboard Systems, Ambient Air Conditions in Surface Ship Compartments.
DOD-STD-1399, Section 300 - Interface Standard for Shipboard Systems, Electric Power, Alternating Current (Metric).
MIL-STD-1657 - Switching Equipment, Combat System, Command and Control, and Fire Control and Fire Control Requirements for.
MS3105 - Connector, Receptacle, Electric Dummy Stowage.
MS3187 - Plug, End Seal, For MIL-C-26482, MIL-C-5015, MIL-C-81703 and MIL-C-83723 Electrical Connectors.
MS3402 - Connectors, Receptacle, Electric, Box Mounting, Front Release, Crimp Contact, AN Type.
MS3406 - Connectors, Plug, Electric, Front Release, Crimp Contact AN Type.
MS3415 - Clamps, Strain Relief, 45°, for Electric Connectors.
MS3417 - Clamps, Strain Relief, Straight, for Electric Connectors.
MS15571 - Lamps, Incandescent, T-3-l/4, Miniature Bayonet, Single Contact.
MS15572 - Lamps, Incandescent, G-4-l/2, Miniature Bayonet, Single Contact.
MS15573 - Lamp, Incandescent, G-3-l/2, Miniature Bayonet Base, Single Contact.
MS17143 - Terminal, Lug, Crimp Style, copper, Insulated, Rectangular Tongue, Type II, Class 1 for 105°C Total Conductor Temperature.
MS18121 - Ferrules, Outer, Insulated, Shield Terminating Type II, Two-Piece, Class 1, for Shielded Cable.
MS21981 - Ferrule, Inner, Uninsulated, Shield Terminating, Type I, Two-Piece, Class 1, for Shielded Cable.
MS24140 - Relay, SO Amp, IPST, N.O. Type 1, Hermetically Sealed.
MS24168 - Relay, 100 Amp, 3PST, N.O. Type I, Hermetically Sealed.
MS25181 - Splice, Electric, permanent, Crimp Style, CoPPer> Insulated, Type 11, Class 1.
MS25237 - Lamp, Incandescent, Single Contact Midget Flanged Base (T-1-3/4 Bulb):
MS25274 - Cap, Electrical (Wire End, Crimp Style, Type II, Class 1) for 105°C Total Conductor Temperature.

MS27400 - Relay, Permanent Magnet Drive, 10 Amp, 4PDT, All Welded, Hermetically Sealed.
MS27429 - Splice, Conductor, Disconnect, Crimp Style, copper, Insulated Barrel, Type II, Class 1 for 105°C Total Conductor Temperature.
MS27745 - Relay, Magnetic Latch, 10 Amp, 4 PDT, All Welded, Hermetically Sealed.
MS27997 - Relay, 25 Amp, 3PST, N.O. Type I, Hermetically Sealed.

HANDBOOK

MILITARY
MIL-HDBK-225 - Synchros Description and Operation.

2.1.2 Drawings and publications. The following drawings and publications form a part of this specification to the extent specified herein.

DRAWINGS

NAVAL SEA SYSTEMS COMMAND
NAVSHIPS
9000-S6508-73868 - Typical Arrangement and Construction Details of IC Switchboards.
9000-S6501-74120 - Sound Powered Telephone Jack Panel Mounted Type H-27A.
804-1853042 - Bus Failure Alarm Signal (Electronic Type IC/EIDl Monitoring 115 Volts D.C., or 115 Volts A.C., 60-400 Cycles).
815-1853048 - Switch, Linear, Type RLS Remote Operated Assembly Arrangement.
815-1853049 - Switch, Type RLS Assembly, Remote Operation Bulkhead and Panel Mounted.
803-1853221 - Switch, Linear Movement, Style BLS.
803-4680139 - Switching Equipment, Command and Control, and Fire Control; Identification Plates.
80’3-4680146 - Relays, 24 Pole Double Throw and 48 Pole Double Throw (Source Control Drawing).
803-4680149 - Switch, Linear Movement, Style DLS.
803-4680150 - Switch, Linear Movement, Style CLS.
803-4680151 - Switch, Linear Movement, Style JLS.

NAVSEA
803-5002567 - Panel-Mounted Assembly Test Cables.
803-5002990 - Switch, Assemblies, Linear Movement Manual Operation Style KLS.
803-5476797 - Solid State Flasher Panel.

PUBLICATIONS

NAVAL SEA SYSTEMS COMMAND (NAVSEA)
SE 670-FO-MM0-010/Swbds - Care, Preservation, Installation and Maintenance of Switchboards and Control Indicators Panel by Depots and Shipyards Command and Control, Command and Decision, Fire Control Combat Systems and Power Distribution.

DESIGN DATA SHEETS (DDS)
430-1 - Interior Communication Systems, List of Importance, Readiness and Designation Classification.

(Copies of specifications, standards, handbooks, drawings, and publications required by contractors in connection with specific acquisition functions should be obtained from the contracting activity or as directed by the contracting officer.)

2.2 Other publications. The following document(s) form a part of this specification to the extent specified herein. The issues of the documents which are indicated as DoD adopted shall be the issue listed in the current DoDISS and the supplement thereto, if applicable

AMERICAN NATIONAL STANDARDS INSTITUTE (ANSI)
ANSI Y14.1 - Drawing Sheet Size and Format, Engineering Drawing and Related Documentation Practices. (DoD adopted)

(Application for copies should be addressed to the American National Standards Institute, Inc., 1430 Broadway, New York, NY 10018.)

AMERICAN SOCIETY FOR TESTING AND MATERIALS (ASTM)
A 153 - Zinc Coating (Hot-Dip) on Iron and Steel Hardware. (DoD adopted)
B 633 - Electrodeposited Coatings of Zinc or Iron and Steel. (DoD adopted)

(Application for copies should be addressed to the American Society for Testing and Materials, 1916 Race Street, Philadelphia, PA 19103.)

UNIFORM CLASSIFICATION COMMITTEE
Uniform Freight Classification Ratings, Rules, and Regulations

(Application for copies should be addressed to the Uniform Classification Committee Agent, Tariff Publication Officer, Room 1106, 222 South Riverside Plaza, Chicago, IL 60606.)

(Industry association specifications and standards are generally available for reference from libraries. They are also distributed among technical groups and using Federal agencies.)

2.3 Order of precedence. In the event of a conflict between the text of this specification and the references cited herein, the text of this specification shall take precedence.

3. REQUIREMENTS

3.1 Specification sheets. The individual equipment requirements shall be as specified herein and in accordance with the applicable specification sheets (see 6.2.1). In the event of any conflict between the general requirements of this specification and the various other documents, the order of precedence shall be as follows: the Acquisition Technical Data Package (ATDP) (see 6.5.9), the specification sheets, this specification and MIL-STD-1657.

3.1.1 Classification of requirements. The requirements for switching equipment are classified as follows:

Requirement	Paragraph
General features	3.3
Materials and processes	3.4
Parts and features - mechanical	3.5
Parts and features - electrical	3.6
Features - environmental and miscellaneous	3.7
Wiring fixture	3.8
Installation and check out repair parts	3.9
Panel-mounted assembly test cables	3.10
Services	3.11
Drawings	3.12
Workmanship	3.13

3.2 Qualification. Switching equipment furnished under this specification shall be products which are qualified for listing on the applicable qualified products list at the time set for opening of bids (see 4.3 and 6.3).

3.3 General features. Equipment shall be in accordance with the requirements specified in 3.3.1 through 3.3.3.

3.3.1 Primary requirements. Characteristics not normally incorporated in the design of commercial equipment are required on Naval ships. Primary requirements which are the basis for the design of Naval equipment are:

(a) Maximum reliability for operation under shipboard conditions of heat, moisture, vibration, shock, and ship motion as specified herein.
(b) Material and design shall be lightweight and compact consistent with reliable shipboard operation.
(c) Maximum accessibility for inspection and maintenance.
(d) Maximum simplicity of design consistent with other requirements specified herein.
(e) Maximum resistance to corrosive action, in particular, that of moist sea air and ultraviolet radiation.
(f) Maximum operating and maintenance economy.
(g) Maximum interchangeability of parts.
(h) Minimum number of necessary maintenance parts.

(i) Identification of equipment and parts for ease in accurate requisitioning.
(j) Drawings with complete and concise manufacturing instructions.
(k) Maximum ease of repair by Naval personnel and with the facilities normally found on board ships of the Navy.
(1) Maximum protection for operating and maintenance personnel.
(m) Maximum ease of installation.

3.3.2 Standard stock items. Standard stock materials, parts, and hardware shall be used to as great an extent as practicable (see 3.6.2). For the purpose of this specification, standard stock is defined as material listed in the Federal Supply Catalog and includes such items as bearings, grease, oil, wire, bolts, screws, nuts, and washers. (Copies of this catalog may be consulted in the office of the Defense Contract Administration Services Management Area (DCASMA)). Proprietary parts or parts available from only one source shall not be used where equivalent or similar parts are available as standard parts or are available from two or more sources.

3.3.3 Interchangeability. Parts shall be interchangeable in accordance with requirement 7 of MIL-STD-454. In no case shall parts be physically interchangeable or reversible unless such parts are also interchangeable or reversible with regard to function, performance, and strength.

3.4 Materials and processes. The following material and processes are applicable to the switching equipment described herein.

3.4.1 The following requirements of MIT.-STD-454 are applicable:

Requirement 3 - Flammable materials.
Requirement 4 - Fungus-inert materials.
Requirement 11 - Insulating materials, electrical (see 3.4.5 and 3.6.27.3.1).
Requirement 13 - Structural welding. Test and inspection requirements noted in MIL-w-8604 are not required.
Requirement 15 - Ferrous alloys, corrosion-resistance (only austenitic corrosion-resistant steel shall be used).
Requirement 21 - Casting.
Requirement 26 - Arc-resistant materials.
Requirement 43 - Lubricants.

3.4.1.1 Recovered materials. Unless otherwise specified herein, all equipment, material, and articles incorporated in the switching equipment covered by this specification shall be new and shall be fabricated using materials produced from recovered materials to the maximum extent practicable without jeopardizing the intended use. The term “recovered materials” means materials which have been collected or recovered from solid waste and reprocessed to become a source of raw materials, as opposed to virgin raw materials. None of the above shall be interpreted to mean that the use of used or rebuilt products is allowed under this specification unless otherwise specifically specified.

3.4.2 Toxic materials. Radioactive materials, materials containing mercury, and heavy metal biocides shall not: be used.

3.4.3 Wood. Wood shall not be used.

3.4.4 Metals.

3.4.4.1 Aluminum. Where the use of lightweight corrosion-resistant metal is desired, wrought aluminum alloys of the 5000 series shall be used insofar as practicable. These aluminum alloys shall conform to QQ-A-200, QQ-A-225, or QQ-A-250. In general, aluminum alloy castings shall conform to alloy A360 of QQ-A-591 or to alloy A356 of QQ-A-596, or QQ-A-601. High strength aluminum alloy castings shall conform to alloy A356 of MIL-A-21180.

3.4.4.2 Magnesium. Magnesium and magnesium alloys shall not be used.

3.4.4.3 Nonferrous metals. Nonferrous metals, except as specified herein, shall not be used.

3.4.4.3.1 Zinc. Zinc shall not be used where the increased electrical resistance of the surface, due to the protective treatment, might have a detrimental effect on electrical performance.

3.4.4.4 Springs (material). Material for springs shall be in accordance with QQ-W-423.

3.4.5 Plastics. Plastics used in switching equipment shall be in accordance with requirement 11 of MIL-STD-454 and 3.4.5.1 through 3.4.5.3.

3.4.5.1 Molded parts. Molded parts for circuit breaker mounting bases shall conform to the requirements of MIL-C-17361 or MIL-C-17588 as applicable.

3.4.5.2 Plastic description plates. Plastic for description plates (see 6.5.8) shall be in accordance with L-P-387.

3.4.5.3 Dials and transparent or translucent parts. Plastic for dials (for other than switchboard meters) and other transparent or translucent applications shall be in accordance with MIL-P-5425. Polystyrene, methacrylates, allyls, cellulose acetate butyrate, vinyl chloride-acetates, and melamine are acceptable materials for dials and related translucent or transparent parts.

3.4.6 Ceramics. Ceramics shall not be used.

3.4.7 Glass. Glass, when used for meter and indicator dials, shall be clear, presenting no evidence of distortion when viewed from any angle.

3.4.8 Painting. After machining, welding, and brazing operations have been complete, the surfaces of metal enclosures and parts to be painted shall have rust or other visible corrosion products removed and shall be thoroughly cleaned of grease, oil, and dirt and painted in accordance with the requirements of system 37 of MIL-STD-1303. (Chemical conversion coating in accordance with class 1A of MIL-C-5541 may be used as an alternative to the primers specified in system 37. See 3.4.9.l(d) for modification of MIL-C-5541.) Specific surfaces that require painting are shown in the applicable specification sheet and in requirements of MIL-sTD-1657.

3.4.9 Protection against corrosion. In order to prevent corrosion, metal parts which are not to be painted shall be of corrosion-resistant materials or other materials treated as specified in 3.4.9.1 to render them adequately resistant to corrosion. Internal parts fabricated from nonferrous materials contained in a watertight enclosure need not be given a corrosion-resistant treatment.

3.4.9.1 Corrosion-resistant treatments. Corrosion-resistant treatments shall not be applied to surfaces which are in functional contact where gouging or binding may be a factor or where the treatment might interfere with normal functioning or where electrical grounding through the surface is required. The most applicable corrosion-resistant treatment of those listed below shall be applied after fabricating operations such as welding, machining, drilling, and tapping have been completed.

(a) Zinc coating, hot dip galvanizing conforming to ASTM A 153, for parts other than threaded fasteners, unless part specifications contain other requirements.
(b) Electroplating of zinc conforming to type II, Fe/Zn 13 of ASTM B 633, for surfaces not to be painted except that Fe/Zn 8 thickness may be used for externally threaded parts, bolts, studs, and washers. Type 1, Fe/Zn 13 of ASTM B 633 may be used on parts which are continuously exposed to temperatures in excess of 150 degrees Fahrenheit (“F), or are intermittently exposed for short periods to temperatures of approximately 300°F. Either Fe/Zn 13, type II, or Fe/Zn 13, type IV of ASTM B 633 shall be used on surfaces that are to be painted.
(c) Electroplating of chromium conforming to QQ-c-320.
(d) Chemical conversion coating in accordance with class 1A of MIL-C-5541, except the surface temperature of the coating may not exceed 140°F during drying or curing and the salt spray test is not required.

3.4.9.2 Selection of metals. In order to minimize corrosion attack due to electrolytic action between dissimilar metals when used in contact with each other, selection shall be in accordance with MIL-STD-889.

3.4.10 Printed wiring board materials. Materials for printed wiring boards shall be in accordance with MIL-P-13949.

3.4.11 Laminated materials. The use of laminated materials (that is melamine, glass epoxy) for mechanical insulating linkages is prohibited.

3.5 Parts and features - mechanical. The following mechanical parts and features are applicable to the switching equipment specified herein:

3.5.1 The following requirements of MIL-STD-454 shall apply:

Requirement 12 - Fastener hardware (see 3.5.1.1)
Requirement 21 - Castings
Requirement 63 - Special tools

3.5.1.1 Fastener hardware. Thread cutting and self-tapping screws shall not be used. A lock washer shall be installed under the head of other than flat head machine screws. Flat head machine screws shall be secured with a locking compound in accordance with MIL-S-22473 applied to the thread of the screw.

3.5.2 Enclosures.

3.5.2.1 General. Switchboard section enclosures shall be fabricated from aluminum shapes or formed members and sheets by welding or bolting in accordance with the structure shown in the applicable specification sheet. Control indicators shall be fabricated in accordance with the structure shown in the applicable specification sheet. Framework of deck mounted switchboard sections shall have sufficient strength to support the door, where applicable, in any position with only the deck mounting bolts installed.

3.5.2.2 Enclosure design. Design of enclosures shall be in accordance with the applicable specification sheet. Enclosures shall be perpendicular, parallel, and flat in accordance with the applicable specification sheet when tested in accordance with 4.6.11.

3.5.2.2.1 Geometric control of enclosures (deck mounted). Switchboard enclosures shall—be perpendicular, parallel, and flat in–accordance with the following (see figure 1):

(a) The base of the assembled switchboard section enclosure, consisting of a front and back section, is designated surface "A" which is to interface with the shipboard site installation mounting foundation (see figure 1).
(b) For switchboards of more than one section, surface “A” shall include the base plane of all sections and surface “D” shall include the front surface plane of all sections. Prior to delivery, each switchboard shall be tested for compliance with the requirements listed (see 4.6.11). All sections of multiple section switchboard shall be assembled on a common foundation and bolted together with their intersection fastening hardware for this test.

3.5.2.2.2 Geometric control of enclosures (bulkhead mounted). Switchboard enclosures shall be perpendicular, parallel, and flat in accordance with the following (see figure 2):

(a) The mounting surface of the assembled switchboard enclosure, is designated surface “A” which is to interface with the shipboard or site installation mounting foundation (see figure 2).

3.5.2.3 Size. Size of switchboard sections (see 6.5.2) and control indicators (see 6.5.5) shall be in accordance with the requirements of the applicable specification sheet.

3.5.2.4 Degree of enclosure. Degree of enclosure of switchboards and control indicators shall be as specified in 3.5.2.4.1 and 3.5.2.4.2 and shall be in accordance with MIL-STD-108.

3.5.2.4.1 Switchboards. Enclosures for switchboards (see 6.5.1) shall be dripproof and in accordance with the applicable specification sheet. Where the requirement is dripproof for a zero degree angle of drip, gaskets and shields over openings on the front of the switchboard will not be required. The top of dripproof enclosures shall prevent dripping water from entering the switchboard enclosure of damaging meters on the front of the enclosure. Effectiveness of the switchboard enclosure shall not be tested.

3.5.2.4.2 Control indicators. When specified (see 6.2.1), enclosures for control indicators to be mounted in locations exposed to the weather shall be watertight and enclosures for control indicators to be mounted in interior locations shall be dripproof, for a zero degree angle of drip except that gaskets and shields over openings on the front of the control indicator will not be required. The watertight enclosure shall pass the test specified in 4.6.9. Effectiveness of dripproof enclosures shall not be tested.

3.5.2.5 Mounting. Enclosure mounting shall be in accordance with the requirements of the applicable specification sheet.

3.5.2.5.1 Mounting hardware and sway braces will be provided by the installing activity. Intersection fastening hardware shall be provided by the manufacturer (see 5.1.3).

3.5.2.6 Enclosure accessibility. Enclosures shall be constructed in accordance with requirement 36 of MIL-STD-454 to provide maximum accessibility for maintenance.

3.5.2.6.1 If access to the inside of the back of the control indicator enclosure is required, hinged panel or subpanels shall be provided to permit access from the front of the enclosure. It shall not be necessary to remove any of the permanently mounted internal parts or subassemblies in order for the enclosures to be mounted. Parts and subassemblies shall be mounted to permit easy replacement.

3.5.2.6.2 Enclosure construction shall be such that wiring, terminals, and electrical connections shall be accessible for servicing and test purposes without requiring the removal of a part or subassembly from the enclosure in which it is mounted, except where plug and jack connections are used. Items which are subject to replacement or servicing under normal maintenance shall not be secured by rivets, welding, or other means which prevent ready removal. Equipment shall be completely dead front (except for such items as fuse testers where less than 6 volts (V) are used).

3.5.2.7 Doors. Switchboard doors (see 6.5.2.1) shall be in accordance with the applicable specification sheet. Unless otherwise specified (see 6.2.1), the hinges for the doors on types II through V, VII, IX, X and XII switchboards shall be on the left side of the door when viewed by an operator facing the door. A temporary information plate shall be attached to the upper latch on types II, IV, VII, IX, X and XII switchboard sections cautioning against opening of the door prior to installation or otherwise securing the section against toppling over. Door positioner and detent mechanisms shall incorporate positive stops to prevent the door from striking or damaging parts mounted on an adjacent switchboard section or other equipments. Operation of the positioner or detent mechanism shall be from the front of the switchboard and shall not

constitute a personnel hazard. Door hinge and door latch thrust and sleeve bearings shall be made from oil-impregnated material, type I, in accordance with MIL-B-5687. Door rollers shall be made from copper-silicon alloy in accordance with QQ-C-591.

3.5.2.8 Panel-mounted assemblies. Panel-mounted assemblies shall be in accordance with requirements of MIL-STD-1657. When any of these panel-mounted assemblies are located in the vertical column of panel spaces next to the door latches on the front panel layout drawing, the "short depth" (length) dimensions as shown on the figures in requirements 5 through 15, 17, and 18 of MIL-STD-1657 shall apply.

3.5.2.9 Cable entrance. Cable entrance shall be as specified in the applicable specification sheet.

3.5.2.10 Step plate. A step plate or protective plate shall be provided as specified in the applicable specification sheet. Gray rubber matting in accordance with MIL-M-15562 (secured with adhesive in accordance with MMM-A-121) shall be provided on these plates.

3.5.2.11 Lifting eyebolts. Provision shall be made for lifting eyebolts as specified in the applicable specification sheet. Lifting eyebolts shall be provided by the manufacturer.

3.5.2.12 Grounding and bonding. Doors and supporting framework, front and back switchboard sections, and adjacent switchboard sections shall be bonded in accordance with the requirements of MIL-STD-1310. A grounding terminal (or bus as required) shall be located on the inside of the left hand (when viewed from the front of the switchboards) bottom side frame member of each type II, IV, VI, VII, IX, X, and XII switchboard front section (back section for type VIII) for grounding the frame to its foundation. For types III, V, and XI switchboards and control indicators, the grounding terminal shall be located on the lower right side (when viewed from the front of the switchboard) of the outside of the enclosure. Grounding strap will be provided by the installing activity. Those circuits identified as "SWBD GND" shall be wired to this ground terminal either directly or via terminals on a terminal board in the bottom module. If vibration or shock mounts are used to protect an internal chassis or items on the chassis, the chassis shall be bonded to the unit enclosure. The ship hull, internal chassis, or unit enclosure shall not be used in lieu of appropriate electric conductors in equipment circuitry. No electric circuit which connects directly to ship wiring external to the unit enclosure shall be electrically connected to the ship hull (placed at ship hull potential), Meter cases shall be securely grounded to the switchboard frame, either through the mounting hardware or by grounding straps.

3.5.2.13 Card holder. When specified (see 6.2.1), a card holder shall be provided inside each switchboard section to hold the revision record card (see 3.5.10.4). This holder shall be located on the right hand side of the switchboard section, horizontally at the top of the switchboard section, or on the right side of the door assembly.

3.5.2.14 Hinged module stops. Means shall be provided on hinged modules to prevent their opening beyond the angle specified in the applicable specification sheet.

3.5.3 Through bolting. Through bolting or threading into watertight enclosures shall not be permitted. Bosses shall be provided for this purpose in cast enclosures. Blind tapped welded buttons shall be used in sheet metal enclosures .

3.5.4 Spare panel-mounted assemblies, circuit breakers, or switches. Space for at least five full depth (11 inch) panel-mounted assemblies shall be provialed in type II, IV, VI, IX, X, and XII switchboard sections. Space for two style DLS switch assemblies (see 3.6.3.14) shall be provided in type VIII switchboard sections. Unused panel spaces shall be fitted with blank front plates. Space for at least five switches, or circuit breakers shall be provided in type VII switchboards. Space for at least two spare switches shall be provided in type III, V, and XI switchboards. These spare spaces are initial design requirements and may be used during the development of design.

3.5.5 Rounded corners and edges. Corners and edges of external surfaces, normally exposed or to be painted, shall be rounded.

3.5.6 Protection of wiring. Edges of parts that will come into contact with wiring shall be rounded or provided with rounded insulating guards, grommets, or pads to prevent damage to the internal wiring (see 3.6.27.8). Stand-offs or protective plates shall be provided where required to prevent wiring from being damaged by terminal nuts or screw threads. Insulating guards, grommets, pads, sheaths, stand-offs, and protective plates shall be type F, grade a of MIL-I-631.

3.5.6.1 Each exposed, electrical terminal which can not be deenergized by opening the main supply switch on the board (such as on power available lights, voltmeter circuits, and line terminals on the main supply switches) shall be insulated with a plastic tubing or by application of insulating paint. Other exposed terminals which are particularly hazardous because of their location when the switchboard door is open (such as large switches mounted near the opening edges of doors) shall also be insulated in this manner.

3.5.7 Internal subassembly protection. Complete unit internal subassemblies shall be provided with means to prevent injury to pointers, dials, and other parts when the subassembly is removed from its enclosure and rested on a work bench on either its top or bottom.

3.5.8 Drilled and tapped holes. Drilled and tapped holes shall be countersunk sufficiently to remove burrs and sharp edges. Tapped holes in aluminum shall be fitted with helical coil inserts.

3.5.9 Identification and ORDALT/FIELD CHANGE plates. An identification and ORDALT/FIELD CHANGE plate in accordance with Drawing 803-4680139 , combined or separate plates in accordance with the applicable specification sheet shall be provided for each complete switchboard or other complete unit. The manufacturer’s name and contract number shall be entered on this plate. The plate shall be located as shown on the figures in the applicable specification sheet. The Mark and Mod of the switchboard shall be entered on this plate, if a Mark and Mod is assigned. The Mark and Mod assignment will be provided by the Naval Sea Systems Command (NAVSEA). Identification and ORDALT/FIELll CHANGE plates shall be attached by screws.

3.5.9.1 Identification and ORDALT/FIELD CHANGE plates used for equipment in submarines shall have white backgrounds and black markings.

3.5.10 Description, warning, and instruction plates. Description plates (see 6.5.8) shall be type A, B, C, or E in accordance with MIL-P-15024 and MIL-P-15024/5. Painted metal description plates shall match the background to which they are attached. Warning and instruction plates may be of adhesive-backed foil. Description plates shall be attached by screws.

3.5.10.1 Stationary and rotary description plates for panel assemblies used in surface ships shall have gray backgrounds and black markings. Warning plates shall be in accordance with requirement 1 of MIL-STD-454. Stationary and rotary description plates for panel assemblies used in submarines shall have white backgrounds and black markings. Colors used for backgrounds and markings shall be in accordance with FED-STD-595 as follows:

Color	Color number
Gray	26307
Black	27038
White	27875
Red	21105
Yellow	23665

3.5.10.2 Description plates for circuit breakers, switches, or switch assemblies shall specify the following information in the order indicated:

(a) Station to which unit is connected.
(b) Instrument in the station (only where the same function is connected by separate switches to different instruments in the same station).
(c) Function.

3.5.10.2.1 Rotary description plates for switches shall be in accordance with piece 64 of Drawing 815-1853048.

3.5.10.2.2 In order to simplify description plates, an ordnance system or a major instrument, such as a computer, position keeper, or analyzer having many inputs and outputs, shall be considered as a station.

3.5.10.2.3 Information plates, or marking power distribution switches are colored to denote their readiness classification for I.C. switchboards. DDS 430-1 contains a list of colors and classification.

3.5.10.3 The function of each unit on the face of the switchboard shall be indicated adjacent to the associated unit. Fuses or indicator lights mounted on overflow panels shall also be identified with the basic panel number. Where circuit breakers are used in pairs, a single description plate shall be required to identify the function of the circuit breakers.

3.5.10.4 Revision record card (see 6.5.8.1). When specified (see 6.2.1), a card approximately 8 by 10 inches in size shall be provided for each switchboard. This card shall contain a list of detail schematic wiring diagrams, back section terminal layout or back section connector location (as applicable) and front panel layout applicable to the switchboard together with the revision of these drawings in effect at time of delivery. This card shall be suitable for recording the revision changes as described in the ORDALT or field change instructions. It shall be stowed in the card holder (see 3.5.2.13).

3.5.11 Designation of panel assemblies, terminals, and parts.

3.5.11.1 Panel assembly number. Each panel-mounted assembly or switch space on the switchboard shall be numbered consecutively starting at the left (operator's left) top corner of the switchboard and numbering downward in each column and in successive columns to the right. Stationary description plate shall be marked with the applicable number. This number shall also be marked on the back of the door or switchboard frame for all panel spaces.

3.5.11.2 Terminal designation. A unique designation shall be assigned to every wire connection point within the switchboard to identify individual connection points and facilitate connection, tracing, or replacement of wiring. These designations shall identify each device and each connection point within each device (for example, such as, each connector, module, terminal board, contact in each connector) in accordance with table I. These designations shall not duplicate ship wire markings. The actual numbering of the devices shall be as specified in the applicable specification sheet and in the ATDP.

TABLE I. Terminal designation.

Designations	
SHIP CABLE CONNECTOR JC 1 B D m	
JC Ship cable connector 1 Section number (1, 2, 3, etc.) B Module letter (B, C, D, etc.) D Connector locater (A, B, C, etc.) m Pin number (alpha or numeric)	
TAPER PIN BLOCK PB 1 B B A 3	TERMINAL JUNCTION SYSTEM PB 1 B B 8 D
PB Pin block 1 Section number (1, 2, 3, etc.) B Module letter (B, C, D, etc.) B Taper pin block locator (A, B, C, etc.) A Pin group (A, B, C, etc.) 3 Pin number (L, 2, or 3)	PB Pin block 1 Section number (1, 2, 3, etc.) B Module letter (B, C, D, etc.) B Terminal junction track locator (A, B, C, etc.) 8 Terminal junction module (1-10) D Terminal junction pin letter (A-H)

TABLE 1. Terminal designation. - Continued

Designations
MODULE TERMINAL BOARD MT 1 B A 12
MT Terminal board 1 Section number (1, 2, 3, etc.) B Module letter (B, C, D, etc.) A Terminal block locator (A, B, C, etc.) 12 Terminal number (1-12)
MODULE HARNESS CONNECTOR JM 1 B C 15
JM Module harness connector receptacle (PM module harness connector plug) 1 Section number (1, 2, 3, etc.) B Module letter (B, C, D, etc.) C Connector locator (A, B, or C) 15 Pin number (1, 2, 3, etc.)
INTER-SECTION CONNECTOR PR 1 A A 15
PR Rear inter-section plug (JR rear inter-section jack) 1 Section number (1, 2, 3, etc.) A Module letter (A) A Connector locator (A, B, C, etc.) 15 Pin number (1, 2, 3, etc.)
LS/CLS SWITCH CONNECTOR PP 60 A CE 15	DLS SWITCH PANEL CONNECTOR PP 10 E C
PP Panel connector 60 Panel (switch) location (1, 2, 3, etc.) A Connector locator (A or B) CE Switch contact pole group (AB to HH) 15 Switch contact column (1 to 16)	PP DLS switch panel connector 10 Panel (switch) number (1, 2, 3, etc.) E Switch connector locator (C, D, etc.) C Pin number (A, B, C, etc.)
PANEL CONNECTOR PP 31 A 10 - PANEL TERMINAL BOARD PT 31 A 10
PP Panel connector (PT panel terminal board) 31 Panel location (1, 2, 3, etc.) A Panel connector or terminal board locator (A or B) 10 Pin number (1, 2, 3, etc.)

3.5.11.3 Designation of parts. Parts, such as transformers, relays, electron tubes, capacitors, and resistors, shall be identified by markings adjacent to the part on the chassis or board on which the part is mounted. Marking shall be that designation assigned in the associated detail schematic wiring diagram, and shall be clearly and indelibly made as specified in MIL-STD-1657.

3.5.12 Wire marking. Except for the locations identified in 3.5.12.1, both ends of each and every internal wire shall be marked. Marking on each end of each wire shall identify the location of both ends of the wire. Color coding shall not be used as a substitute for wire marking. Marking device shall be placed on the wire as close as possible to the contact or terminal lug so as to be easily readable after installation. Markers shall fit snugly over wire to prevent sliding off over contacts or terminal lugs.

3.5.12.1 Wire markers are not required in the following locations:

(a) Internal wiring of linear movement switches, “T bar” digital switching panels, and panel mounted assemblies.
(b) Jumpers between terminals on one LS switch “A”’ connector where double contacts are used (see 3.6.10.1). Wire markers on the harness conductor shall identify the subsequent terminals jumpered as follows: “PM2HA15/PP60ACE15, CE14, EC14, EC13”.
(c) Jumpers between terminals on taper pin blocks (as specified in requirement 3 of MIL-STD-1657) or terminal junction systems (as specified in requirement 4 of MIL-STD-1657) when installed in type IV switchboard back section modules.
(d) Jumpers between terminals on the same terminal board.
(e) Interconnecting harness wiring to connector plugs PA and PB on digital switching panels (DLS, BLS or T bar) on type VIII switchboards.
(f) When the connectors require a back shell.

3.5.13 Wire markers. Wire markers shall be white tubing class L in accordance with MIL-I-23053/5 or form U, type F in accordance wtth MIL-I-631. Markings shall be nonfading, abrasion-resistant black (class 1 in accordance with MIL-sTD-104) meeting the requirements of MIL-M-81531. Markings shall be applied to the tubing by a heat process using indelible ink.

3.5.14 Pushbutton assemblies. Where interlocked pushbutton assemblies are required, pushbuttons shall be mechanically interlocked so that only one button may be depressed at a time. Each assembly shall have one latching “off” button having the same electrical contact mechanism as the remaining buttons, so as to provide remote indication in the “off” position.

3.6 Parts and features - electrical. The following electrical parts and features are applicable to the switching equipment described herein:

3.6.1 The following requirements of MIL-STD-454 are applicable:

Requirement 2 - Capacitors
Requirement 5 - Soldering (also covers mounting of electrical/ electronic parts) (see 3.6.26)
Requirement 14 – Transformers, inductors, and coils (see 3.6.7)

Requirement 18 - Derating of electronic parts and materials
Requirement 24 - Welds, resistance, electrical interconnections
Requirement 29 - Electron tubes
Requirement 30 - Semiconductor devices
Requirement 33 - Resistors
Requirement 37 - Circuit breakers
Requirement 56 - Rotary servo devices
Requirement 69 - Internal wiring practices

3.6.1.1 Figures 3 and 4 show one-line wiring diagrams of typical I.C. switchboards. The characteristics of each I.C. switchboard, the power supplies and bus arrangements and the switchboard parts required shall be as specified (see 6.2.1). (See figures 3 and 4.)

3.6.2 Standard electronic and electrical parts. Standard electronic and electrical parts, defined as tHose listed in MIL-STD-242, shall be used when the part is not specified herein. The procedure for the selection of electronic and electrical parts and materials not specified herein or in MIL-STD-242 shall be in accordance with MIL-STD-965 and the data ordering document included in the contract (see 6.2.2).

3.6.3 Switches. Type LS switches (see 3.6.3.14) shall be used as the primary switch in all switchboards except for type VII.

3.6.3.1 Switch assemblies (see 6.5.3). Normally only one switch of the rotary selector or snap--type along with associated fuseholders and indicator lights shall be mounted in a panel assembly (see 6.5.4). However, when specified in the ATDP, two rotary or snap switches may be mounted in one panel assembly. Where sufficient space is not available within the assembly for the associated items, those i.n excess may be located on a nearby panel on the same switchboard section, preferably in the same horizontal row.

3.6.3.1.1 Type JR 10 rotary switches shall be used in place of snap type rotary switches as “power supply (ON/OFF)” switches, for loads not in excess of 10 amperes (A) unless otherwise specified in the ATDP.

3.6.3.1.2 For rotary or snap type switch assemblies, internal switch wiring shall terminate on the fixed part of a connector receptacle with pin contacts (or terminal board for loads in excess of 10 A) which shall be mounted on the rear of the assembly.

3.6.3.1.3 Remotely operated RLS switches include remote control circuit accessories (toggle switch, indicator lights, and fuseholders) and provide space for mounting up to four additional fuseholders to accommodate up to eight load circuit fuses. Manually operated MLS and MBLS switches provide space for mounting up to six fuseholders to accommodate up to 12 load circuit fuses. Manually operated MCLS switches may have provisions for any load circuit fuses. Remotely operated RDLS switches include remote control circuit accessories (same as for RLS but do not have provision for any load circuit fuses).

3.6.3.1.4 When supplying power, switch contacts shall not be paralleled to obtain increased current carrying capacity. The large load shall be split between two separate sets of switch contacts and associated separate wiring.

3.6.3.2 Switch mounting. Switches shall be mounted so that the switch handle will be vertical on vertical panels or perpendicular to the operating edge on sloping or horizontal panels, when the switches are in their normal operating position. Normal operating position will be specified in the ATDP. Switch styles JR, JM, JK, lSR, and 6SR over nine sections and JL, MO and MC over five sections shall be secured at the rear to protect against damage due to shock.

3.6.3.3 Blank switch positions. Blank positions shall not be located between two used positions of rotary or linear movement switches used for system circuit switching. Transfer of circuits shall be from one active position of the switch to an adjacent active position. Stops shall be provided on rotary and linear movement switches to prevent moving switch contacts to blank positions.

3.6.3.4 Spare switch poles. Where two or more switches are required to switch one group of functions to a particular station (such as a launcher assign switch), at least 10 percent of the total poles shall be provided as spares on one switch of the group. (See 3.6.27.1 regarding information on grouping of circuits through a switch.) Where five or more switches are specified in the ATDP to switch one group of functions, a spare panel space (see 3.5.4) shall be provided adjacent to these switches. Switch pole requirements specified herein are minimum requirements and are not intended to restrict the use of more switches where separation of circuits would help in eliminating electrical interference between circuits. Spare switch poles specified herein are requirements applicable to the initial design of the switchboard and may be used up during development of the design.

3.6.3.5 Switch arrangement. Switch assemblies shall be arranged or grouped together for one station (such as a signal data converter or a fire control system) without regard to whether switches are manually or remotely operated. When practicable, switches for one station shall be in one vertical column and switches for one function or related functions shall be in one horizontal row. In order to reduce inter-switch harness density, switch assemblies for one station may be located adjacent to each other or in separate switchboard sections of a multi-section switchboard.

3.6.3.6 Thumbwheel switches. Rotary (thumbwheel, in-line) switches shall be in accordance with MIL-s-22710.

3.6.3.7 Toggle switches. Toggle switches shall be in accordance with MIL-S-3950.

3.6.3.8 Sensitive switches. Sensitive switches shall be in accordance with MIL-S-8805.

3.6.3.9 Manual operated rotary selector switches. Rotary selector switches shall be in accordance with MIL-S-21604, or as specified in the ATDP. Style JR and JM switches shall be 25 sections, except that 15 sections or less may be used where these switches are specified in a switchboard using style LS, BLS, CLS, or JLS switches (see 3.6.3.1.1 for exception).

3.6.3.9.1 Type S-JF shall not be used in I.C. switchboards.

3.6.3.10 Remote operated rotary selector switches. Remote operated rotary selector switches in accordance with MIL-R-16999 shall not be used in switchboards.

3.6.3.10.1 Unless specified in the ATDP, modified bus transfer switches in accordance with MIL-S-17773 shall be used for direct current (d.c.) circuits or for higher voltages and currents than the rating of the type S-JR switch.

3.6.3.11 Power type rotary switches. Power type rotary switches (snap switches) shall be in accordance with MIL-S-15291 (see 3.6.3.1.1 for exception). Remote operated power type rotary switches shall be in accordance with the ATDP.

3.6.3.11.1 Master switches. Master switches for power conversion equipment connected to the switchboard shall be 3 wire pushbutton type in accordance with MIL-C-2212 and as specified (see 6.2.1.)

3.6.3.11.2 Switching units, power transfer. Switching units, power transfer shall be in accordance with MIL-S-17773.

3.6.3.12 Pushbutton switches. Illuminated pushbutton switches shall be in accordance with MIL-S-22885, as specified in the ATDP. Panel seals, if required for watertight applications, shall be in accordance with MIL-S-22885. Nonilluminated push button switches shall be in accordance with MIL-S-8805. Boots, if required for watertight applications, shall be in accordance with MIL-B-5423.

3.6.3.13 Meter switches. Separate switches shall be provided for both alternating current (a.c.) and d.c. voltmeters. Power distribution switchboards (type VII) meter switching shall be in accordance with MIL-S-18396 or as specified in the ATDP.

3.6.3.13.1 Voltmeter select switches shall be type 1SR2E2 in accordance with MIL-S-15291, or as specified in the ATDP. Voltmeter select switches shall provide ground detector readings on each side of a.c. and d.c. buses.

3.6.3.13.2 Bus select switches shall be type S3JK3 in accordance with MIL-S-21604/2. Where more than 15 buses are required to be monitored, two bus select switches shall be installed. Bus select switches shall provide voltage readings on each phase of each a.c. bus and each d.c. bus.

3.6.3.13.3 Resistors and shunts for metering shall be in accordance with MIL-I-1361 and shall be high-impact (H.I.) shock resistant. Variable resistors for voltage and frequency control of motor generators or static power supplies when they are to be controlled from the I.C. switchboard shall be as specified.

3.6.3.14 Linear movement switches. Linear movement switches shall be in accordance with the following:

Switch style	Specification sheet	Drawing number
LS	MIL-S-24187/l	815-1853048
BLS	MIL-S-24187/2	803-1853221
CLS	MIL-S-24187/3	803-4680150
DLS	MIL-S-24187/4	803-4680149
Enclosed LS	MIL-S-24187/l	815-1853049
JLS	MIL-S-24187/5	803-4680151
SLS	MIL-S-24187/6	(Inactive for new design)
KLS	MIL-S-24187/7	803-5002990

3.6.4 Indicator lights, lamps and alarms.

3.6.4.1 Indicator lights. Indicator lights for switchboard applications and dripproof control indicator shall be in accordance with MIL-S-22885, as specified in the ATDP, using color filter caps in accordance with MIL-S-22885. Except for the relay tester, each indication shall use two lamps in parallel. Voltage dropping resistors shall be installed in accordance with table II. Circuits of 115 V a.c. shall not be installed in the same indicator with 50-V d.c. or lower circuits. Indicator lights for watertight control indicators shall be in accordance with MIL-L-3661. For d.c. applications, styles LH95 or LH96 shall be in accordance with MIL-L-3661/62 or MIL-L-3661/63 respectively; for a.c. applications, styles LH93, LH94, LH97, or LH98 in accordance with MIL-L-3661/60, MIL-L-3661/61, MIL-L-3661/64 and MIL-L-3661/65, respectively. Indicator light colors shall be as follows:

Yellow - Open
Blue - Closed
Green - Normal
Red - Dangerous or Emergency - Also to be used in dark-adapted applications
White - Power on or power available except in dark adapted locations

TABLE II. Lamps.

Application	Military part number	Industry number	Vrms	Recommended voltage max Vrms 1/ 2/
Indicator lights				
6 V circuits and fuse tester	MS25237-381	381	6.3	6
28 V, 50 V, 115 V d.c. circuits 1/ and relay tester	MS25237-387	387	28	24
115 V a.c. circuits	3/ M15098/11-004 (see MIL-L-15098/11)	A1H 2/	115	115
Control indicator dial illumination	MS15571-1	44	6.3	6
	MS15571-2	47	6.3	6
	MS15573-1	51	6	6
	MS15572-1	55	7	6

See footnotes at top of next page.

1 / On 50-V circuits, use one 2-watt 620-ohm voltage dropping resistor for each lamp. On 28-V circuits, use one l-watt 100-ohm voltage dropping resistor for each lamp. On 115 V d.c. circuits use one 7-watt 2260-ohm voltage dropping resistor for each lamp.
2 / AIH lamps require the use of an external l/4-watt 47K ohm current limiting resistor.
2 / Conforming to MIL-L-15098 and MIL-L-15098/11.

3.6.4.1.1 Indicator light and push button switch combinations shall be in accordance with MIL-S-22885, as specified in the ATDP.

3.6.4.1.2 Power available lights. Unless otherwise specified in the ATDP, power available indicator lights in accordance with MIL-S-22885 shall be provided for supply circuits entering a switchboard, other control switchboards, and control system components. For 3-phase power supplies, power available lights shall be provided for all three phases. Power available lights need not be provided on I.C. switchboards for supplies which are connected via ABT switches having power available lights that are visible to the switchboard operator.

3.6.4.1.2.1 The cutouts for indicator lights or indicator light and push button switches shall conform to the applicable specification sheet of MIL-S-22885.

3.6.4.2 Lamps. Lamps shall be in accordance with MIL-L-6363, MIL-L-15098 and MIL-L-15098/11 for the applications as specified in table II. Lamps used for control indicator dial illumination shall be energized from the secondary of a transformer, and the lighting circuit shall be equipped with a control device to vary light intensity from maximum value to full extinction when all lamps, or 50 percent of the lamps are operative. At 115 V input to the illumination transformer, and with all lamps operative, the lamp socket voltages shall not exceed the values as shown in table II. Rheostats shall not be used.

3.6.4.3 Bus failure alarms. Provision shall be made on main I.C. switchboards for connection of a bus failure alarm to each 28 V, 50 V, 120 V and 450 V bus (see figure 3) unless it is supplied from a local source for which audible power failure indication already exists (see 6.2.1).

3.6.4.3.1 Bus failure alarms shall be in accordance with Drawing 804-1853042, type IC/EIDl in accordance with MIL-A-15303, except for constant frequency buses which shall be as specified in 3.6.4.3.2. When used to monitor 28 V, d.c. or 50 V, d.c. buses, type IC/EIDl alarms shall be connected to 120 V, 60 hertz (Hz) power, and controlled by a relay connected to the bus. When used to monitor 450 V, 60 or 400 Hz buses, type IC/EIDl alarms shall be connected to the bus through a transformer to provide the necessary operating voltage to the alarm unit. Associated batteries, relays, and transformers shall be furnished by the installin~ activity.

3.6.4.3.2 The alarm circuit for the constant frequency bus shall provide for indication of maloperation or failure of the constant frequency control unit. The circuit arrangement shown on figure 3 shall be followed. An audible signal (type IC/BlS4, or H2S4) in accordance with MIL-A-15303, and all necesary relays, will be furnished by the switchboard installing activity.

3.6.5 Fuses, fuseholders, fusing, and circuit breakers.

3.6.5.1 Fuses. Fuses shall be style F03 or F77A in accordance with MIL-F-15160/3 or MIL-F-15160/77 and shall be provided and installed as required by the applicable detail schematic wiring diagrams. Fuses under 1 A rating shall not be used. Fuse size shall be indicated by marking adjacent to each fuse. Unless required by the detail schematic wiring diagrams to be on the supply side of the switch, fuses shall be on the load side of the switch.

3.6.5.1.1 Spare fuse stowage. One “short depth” panel space for spare fuse stowage shall be provided for each three switchboard sections or fraction thereof. Each panel space shall contain four sectioned drawers of sufficient size to stow the spare fuses provided for the associated sections (see 3.9 for approximate quantities). Drawers shall be provided with a door to prevent their being dislodged under shock. Door shall be secured with a flush cabinet latch.

3.6.5.2 Fuseholders. Fuseholders shall be located on the operating surface of equipments, except where location within equipment is specified in the ATDP. Inside locations of fuseholders will be specified only where utmost space economy is necessary and the fused circuit is nonvital. Where a color cap is used to indicate a specific voltage rating of a fuseholder, a paint or decal marker (the same color as the cap of the fuse carrier) shall be located adjacent to the fuse-holder.

3.6.5.2.1 Fuseholders shall be of the dead-front blown-fuse indicating types as specified in 3.6.5.2.1.1 and 3.6.5.2.1.2.

3.6.5.2.1.1 For circuit loads from 1 to 15 A and voltages up to 125 V a.c. and d.c. type FHL57G fuseholders conforming to MIL-F-19207 and MIL-F-19207/38 shall be used, using fuse style F77A in accordance with MIL-F-15160/77.

3.6.5.2.1.2 For circuit loads of 16 to 30 A, type FHL29G fuseholders conforming to MIL-F-19207 and MIL-F-19207/18 shall be used on 12- to 90-V circuits and type FHL1OU fuseholders conforming to MIL-F-19207 and MIL-F-19207/l shall be used on 91- to 250-V circuits, using fuse style F03 in accordance with MIL-F-15160/3.

3.6.5.2.1.3 Meter circuits, buses, bus transfers, alarms, and feeders to and from I.C. power converting equipment shall be in accordance with applicable portions of figure 3. Fuses of 65 A or higher ratings which are used in trans-formers bank primary circuits in accordance with figure 3 may be mounted in shock and vibration proof open clips within the switchboard enclosure (450 V unit) provided that associated blown fuse indicators are mounted on the hinged panel and are plainly visible from the front of the switchboard with doors closed. Secondary coils of current transformers shall be connected in such a manner that whenever the coil, if not supplying current for a particular use, will be shorted by the connecting transfer switch.

3.6.5.3 Blown fuse indicator circuit. Blown fuse indicator circuit used with the type FHL57G fuseholders conforming to MIL-F-19207 and MIL-F-19207/38 shall be energized from the 115-V 60-Hz miscellaneous supply circuit through fuses located on the power available indicator light panel. Specific circuits will be shown on the applicable detail schematic wiring diagrams.

3.6.5.4 Circuit breakers. Circuit breakers, type ALB in accordance with MIL-C-17588, or type AQB in accordance with MIL-C-17361 as applicable, may be used in motor supply circuits having inrush currents. Unless specified in the ATDP, circuit breakers shall not be used in other circuits.

3.6.6 Connectors. Connectors shall be of the type that use crimp type removable contacts in accordance with 3.6.6.1 through 3.6.6.3. A minimum of one of each type of mating connector shall be provided as spares in the INCO kits as pertains to each respective switchboard.

3.6.6.1 Harness wiring connectors. Unless otherwise specified in the ATDP, connectors used on internal harness wiring (on back section modules and on panel-mounted assemblies) shall be in accordance with MIL-C-28748. Part number M28748/09FONOlA in accordance with MIL-C-28748/9 shall be used on fixed structures and part number M28748/10FOALIA in accordance with MIL-C-28748/10 shall be used on harness and intersection wiring.

3.6.6.2 Linear movement switch connectors. Connectors used on linear movement switches shall be in accordance with MIL-C-28731 or as specified on the applicable drawings listed in 3.6.3.14.

3.6.6.3 Ship cable connectors. For types IV, V, VI, IX, and XII switchboards and when specified (see 6.2.1) for control indicators, connectors used with ship cables shall be class D in accordance with MIL-C-5015 or equivalent or MIL-C-39012 (for coaxial cables) as specified in the ATDP. Box mounted connector receptacles in accordance with MS3402 (with pin contacts) shall be installed on the switchboards and the control indicator. When the connector receptacle is mounted in a vertical or angled position, the keyway shall be at the top. When the connector receptacle is mounted in a horizontal position, the keyway shall be towards the front of the switchboard. Mating connector plugs to be installed on ship cables shall be in accordance with MS3406 (with socket contacts). For type IV switchboards, the back shells shall be 45-degree strain relief clamps in accordance with MS3415. For type V switchboards, the back shells shall be straight strain relief clamps in accordance with MS3417. For types VI and IX switchboards, the backshells shall be specified in the ATDP. Connector plugs used with type 2U45 cable conforming to MIL-C-915/63 shall use insert arrangement 44-52 with size 16-22 socket contacts. For type VIII switchboards, connectors used with ship cables shall be in accordance with MIL-C-28731. The specific part numbers of the connector receptacles on the switchboard and of the connector plugs on the ship cables shall be specified in the ATDP. Mating ship cable connector plugs shall be furnished and shipped with each switchboard if not furnished as part of the wiring fixture (see 3.8 and 5.1.3). Connector contacts for size 8 AWG wire or larger may be solder type.

3.6.6.3.1 MS sheets specified herein shall be adhered to and all connectors shall be of the front release type. Tool and ancillary items shall be compatible with the specific connectors provided.

3.6.7 Transformers and inductors. Transformers and inductors shall be in accordance with requirement 14 of MIL-STD-454 and transformers shall be grade 5, class S of MIL-T-27.

3.6.7.1 Current transformers. Current transformers for metering and relaying shall be in accordance with MIL-I-1361, shall have a Navy classification accuracy NSS, and shall be H.I. resistant. Transformer protective devices shall be in accordance with MIL-I-1361.

3.6.7.2 Potential transformers. Potential transformers for metering shall be in accordance with MIL-I-1361, shall have a Navy classification accuracy NSS, shall be H.I. shock resistant, and shall have a standard burden rating of not less than 100 V A.

3.6.8 Relays. Relays shall be provided and installed (see 3.6.14) as specified in the ATDP and shall conform to the following:

(a) D.C. relays shall have arc suppression circuitry for the coil provided as an integral part of the relay.
(b) 4PDT relays shall be 28 V d.c., 48 V d.c. 115 V 60 Hz, or 115 V 400 Hz in accordance with MIL-R-6106 and MS27400.
(c) 24PDT and 48PDT relays shall be in accordance with MIL-R-5757 and Drawing 803-4680146.
(d) 4PDT latching relays shall be in accordance with MIL-R-6106 and MS27745.
(e) lPST and 3PST relays used in type VII switchboards shall be in accordance with MIL-R-6106 and MS24140, MS24168, or MS27997.

3.6.9 Synchros. Internal unit connections and wire markings shall be in accordance with requirement 2 of MIL-STD-1657.

3.6.9.1 Synchro capacitors. Synchro capacitors as specified in the ATDP shall be connected across the stator leads of differential transmitters and control transformers. Synchro capacitors shall be delta connected, and rated at 600 V d.c. for 60 Hz synchros and 1,000 V d.c. for 400 Hz synchros. The three capacitors used as a bank for one synchro shall be matched within 1 percent. Each capacitor shall have the values shown in MIL-HDBK-225 within plus or minus 10 percent.

3.6.9.2 Synchro electrical zero and equipment mechanical zero. It is essential that synchro components be correctly alined with respect to each other, and to the device or parent equipment with which they are used. Electrical zero is the reference point for alinement of all synchro components. Mechanical zero or reference point for the device or parent equipment using synchro components depends upon the particular application of the equipment involved. Whenever a synchro component is used, either as a transmitter or receiver, the synchro electrical zero and the equipment mechanical zero, unless otherwise specified in the ATDP, shall be physically positioned to the same point. Synchros shall be electrically zeroed by the methods specified in MIL-HDBK-225 prior to delivery of equipment.

3.6.10 Wire terminal lugs. Except for contacts used with connectors, pressure grip terminal lugs in accordance with figure titled “Type WTG terminals, square tongue, one bolt hole” of MIL-T-16366 or MIL-T-7928 shall be used. Insulated barrel terminal lugs shall be used. Terminal lugs with projections or “lips” shall be used in cases where necessary to prevent turning of terminal lugs and shorting due to close clearances. Terminal lugs for connection of ship wiring are not required to be provided by the manufacturer.

3.6.10.1 Only one wire shall be crimped to a terminal lug or a single connector contact except where specified in the ATDP for DLS switches and where a double wire crimp contact in accordance with MIL-C-28731/23 is used on class LS switches. When the double contact is used an insulated sleeve (class 1, black, in accordance with MIL-I-23053 and MIL-I-23053/5) shall be installed over the double contact after the wires are crimped. In-line splices shall not be used as a substitute for the double wire contact. Frequency used combinations of wires that may be crimped in the double contact are as follows:

(a) Two 16-AWG wires
(b) Two 18-AWG wires
(c) Two 20-AWG wires
(d) One 20-AWG wire and one 16-AWG wire

3.6.11 Terminal boards. Terminal boards shall be of the stud type in accordance with MIL-T-55164 as specified in the ATDP and as specified in 3.6.11.1 through 3.6.11.4.

3.6.11.1 The maximum number of wires to be connected to any one terminal shall be as specified in the applicable specification sheet of MIL-T-55164. In wiring these terminal boards with the terminal lugs specified in the applicable specification sheet of MIL-T-55164, lock washers are not required. The studs of terminal boards, except those designated to receive ship wiring, shall be fitted with a full complement of barrel nuts. Barrel nuts for securing the terminal lugs of ship wiring shall not be assembled on the equipment but shall be furnished in sturdy textile bags (one size per bag) and packed as required in 5.1.3. Solder type terminals boards shall not be used.

3.6.11.2 Terminal board mounting. Terminal boards for receiving ship cables on other than types VI and IX switchboards shall be secured to a fixed portion of the enclosure, not to hinged panels or other movable assemblies that may require flexing of the ship wiring during normal operation or servicing. Terminal boards shall be mounted so that they will not be broken or stressed by distortion of the enclosure. Terminal boards shall be secured only by machine screws threaded into the supporting member (an insert is required in accordance with requirement 12 of MIL-STD-454 if the tapped material is aluminum alloy) and shall be capable of ready removal of replacement. Access to the backside of the supporting member shall not be required for removal of terminal boards.

3.6.11.3 Spare module terminals. At least 20 percent of the terminals on each module shall be spares. Spare terminals shall not be wired to the module connectors. These spare terminals are initial design requirements and may be used during development of the design.

3.6.11.4 Terminating large conductor ship cables. Provision shall be made for terminating large conductor ship cables for power supplies to switchboard busses or those that may be increased in size for voltage drop considerations by the use of jumper straps or terminal boards with larger current ratings as specified in requirement 1 of MIL-STD-1657. The large terminal boards shall be located on modules located in the lower positions of the back section. In some instances, internal switchboard branch circuits may require the use of more than one terminal on a terminal board. Jumper straps shall be provided to

either connect one large ship conductor or two or more terminals or connect two or more terminals together for internal switchboard branching. Special care shall be taken to maintain the clearances specified in 3.6.29 for these straps between adjacent terminal boards.

3.6.12 Taper pin blocks. Taper pin blocks as used in switchboards shall be in accordance with requirement 3 of MIL-STD-1657.

3.6.13 Terminal junction systems. Terminal junction systems as used in switchboards shall be in accordance with requirement 4 of MIL-STD-1657.

3.6.14 Sockets. Tube, relay, or capacitor sockets shall be of the single unit type in accordance with MIL-S-12883 and as specified in 3.6.14.1 through 3.6.14.4. Gang type sockets are not acceptable. (This requirement is not intended to preclude the assembly of several sockets on a supporting frame providing the contact clips for any socket are on insulating material which is not continuous with that of any other socket.) Contact springs shall have positive contact and positive action.

3.6.14.1 Relay sockets for a.c. 4PDT relays shall be DAN-L, Inc. part number 62OO-104SXH, or equal.

3.6.14.2 Relay sockets for d.c. 4PDT relays shall be DAN-L, Inc. part number 62OO-104SH, or equal.

3.6.14.3 Relay sockets for 4PDT latching relays shall be DAN-L, Inc. part number 32823-17SH, or equal.

3.6.14.4 Relay sockets for the relay tester shall be in accordance with requirement 13 of MIL-STD-1657.

3.6.15 Interior section illumination. Interior illumination shall be provided on all switchboards except types III, V, VI, and VIII by the installation of a fluorescent 8-watt desk light in accordance with MIL-F-16377 and MIL-F-16377/4, and a ballast box in accordance with MIL-F-16377 and MIL-F-16377/46. Power for this light shall be obtained from the ships emergency lighting system. Wiring from the light shall be run to a terminal box (in accordance with MIL-T-24558 and MIL-T-24558/18 symbol 400.1) mounted inside the frame of each section. This wiring shall be kept completely separated from other switchboard wiring.

3.6.16 Flasher Panel.

3.6.16.1 Solid state flasher panel. When a solid state flasher panel is specified in the ATDP, it shall be in accordance with Drawing 803-5476797.

3.6.16.1.1 Spare module cards (as required) shall be included in the Solid State Flasher Panel: Piece numbers 45, 46 and or 47 on Drawing 803-5476797.

3.6.16.2 Mechanical flasher panel. Where a mechanical flasher panel is specified in the ATDP, it shall be in accordance with requirement 14 of MIL-STD-1657.

3.6.17 Synchro signal converter. Where a synchro signal converter is specified in the ATDP, it shall be in accordance with requirement 16 of MIL-STD-1657, and conform to the requirements of MIL-C-24105.

3.6.18 Test equipment.

3.6.18.1 Meters. Voltmeters and voltmeter switch panels on switchboards shall be in accordance with requirement 10 of MIL-STD-1657.

3.6.18.1.1 Frequency meters shall be MR49W60BH or MR49W400DH in accordance with MIL-M-16125, except frequency meters for measuring type 111 power frequency as described in DOD-STD-1399, section 300. Frequency meters for measuring type 111 power frequency shall be type MR49W41AFH or MR49W42AFH in accordance with MIL-M-23167.

3.6.18.2 Fuse tester. When specified in the ATDP, a fuse tester in accordance with requirement 12 of MIL-STD-1657 shall be installed in each switchboard.

3.6.18.3 Relay tester. When specified in the ATDP, a relay tester incorporating facilities to test each type of DPDT or 4PDT plug-in relay used in a switchboard shall be installed. Features and arrangement shall be in accordance with requirement 13 of MIL-STD-1657.

3.6.18.4 Bus selector switches. Bus selector switch panels on switchboard shall be in accordance with requirement 9 of MIL-STD-1657.

3.6.19 Telephone jack box. One telephone jack in accordance with Drawing 9000-S6501-74120, when specified in the ATDP, shall be provided. It shall be located on the lower panel (kick plate) of the center section of an odd numbered multiple section switchboard and on the section to the right of center on all even numbered multiple section switchboards (when viewed from the front of the switchboard).

3.6.20 Wire.

3.6.20.1 Wire type. Wire type shall be in accordance with the requirements specified in 3.6.20.1.1 through 3.6.20.1.4. Wire, except coaxial cables, shall be of at least 19 strand.

3.6.20.1.1 Wire shall be in accordance with MIL-W-16878 and MIL-W-16878/17 (with outer jacket), or MIL-W-16878/18 (with or without outer jacket), or with MIL-W-16878/19, or as specified herein.

3.6.20.1.2 Single conductor shielded wire for radio frequency applications shall be coaxial cable in accordance with MIL-C-17.

3.6.20.1.3 Two- and three-conductor unshielded twisted cables shall be similar to types 2S.J and 3SJ in accordance with MIL-C-915/60 without the shielding braid, fillers, and outer jacket.

3.6.20.1.4 Two-, three-, and four-conductor shielded twisted cables shall be types 2SJ, 3SJ, and 4SJ in accordance with MIL-C-915/60 without the fillers. Outer jacket shall be furnished for tye 4SJ but need not be marked. Types 2SJ and 3SJ do not require an outer jacket.

3.6.20.1.5 For I.C. switchboard applications shielded cables having more than three conductors shall not be used.

3.6.20.1.6 Solid wire and tubing can be used within panel mounted assemblies, (that is, terminal to terminal).

3.6.20.2 Wire size. Minimum wire size shall be selected from the values shown in table 111 in accordance with the requirements specified in 3.6.20.2.1 through 3.6.20.2.4 (load values in table III include inrush currents).

3.6.20.2.1 For supply circuits (including synchro excitation circuits), the wiring from the input back terminals or connector contacts to the line terminal of the fuseholder or circuit breaker shall be capable of carrying the amperage of the root fuse or circuit breaker without overheating or damaging its insulation and shall be not less than size 16 AWG.

3.6.20.2.2 For distribution circuits the wire size from the load terminal of the fuse or circuit breaker to the output back terminals or connector contacts shall be determined by the circuit load data.

3.6.20.2.3 Wire size from a switch supplying several individually fused branch circuits need not be greater than that required to carry the rated amperage of the switch even though the sum of the individual fuse ratings in the several circuits is greater than the rating of the switch.

TABLE III. Circuit load, fuse rating, and wire size data.

External circuit load (A)	Load fuse rating (A)	Minimum wire size (AWG)
Blown fuse indicator circuit	1	22
Digital circuits:	N/A	22
0.8	1	20
2.5	3	18
4.5	5	18
7.0	8	16
9.0	10	16
11.0	12	14
14.0	15	14
18.0	20	12
25.0	30	10
50.0	55	8
75.0	80	6

3.6.20.2.4 Size 20 AWG (green) wire shall be used to terminate the shield of shielded internal switchboard conductors, that is, between the shield terminating ferrule and the terminal.

3.6.21 Batteries. Batteries shall only be used as specified in the ATDP.

3.6.22 Signal generator. Where a signal generator is specified in the ATDP, it shall be in accordance with requirement 17 of MIL-STD-1657.

3.6.23 Supply bus load. In development of switching requirements for types II through VI, VIII, IX, X, and XI switchboards, loads shall be grouped to limit the maximum connected load on any one supply bus to 30 A. These supplies shall be fused at not more than 35 A on the source switchboard.

3.6.23.1 Bus bars. Bus bars shall be copper in accordance with QQ-C-591. The edges of bus bars shall have a radius approximately one-half the bar thickness (full round edges).

3.6.23.2 Use of the bus bars. The use of bus bars shall be kept to a minimum. The principal use of bus bars shall be for very large currents where it would be impractical to employ insulated wiring, and as vertical strips for distribution to individual circuits. In no case shall bus bars be used as interconnecting circuits between or among switchboard units. Unless specified in the ATDP, bus bars shall not be attached to hinged structures.

3.6.23.3 Connections between buses. Connections between the buses of adjacent units of a switchboard shall be made by cables to permit relative movement of the units under shock without rupturing the switchboard bus circuit. The cable connections shall be made by the installing activity. The installation shall conform to the following:

(a) The switchboard design shall provide for the entrance of the connecting cables into the switchboard structure, and for connecting to the switchboard bus. The connecting cable shall extend below the side sheet or flash barrier provided between adjoining units.

(b) Connecting cable shall be in accordance with MIL-C-915. The connecting cables shall have a current rating equal to that of the smaller of two connected buses. Three conductor, heat and flame resistant, type TSGA of MIL-C-915/30 shall be used with 3-phase buses. Where several cables in parallel are required, the three phases shall be carried in each cable. For d.c. buses, one conductor type SSGA of MIL-C-915/28, two conductor type DSGA, MIL-C-915/29 of four conductor type FSGA, of MIL-C-915/31, as applicable, shall be used. Paralleling conductors to secure current carrying capacity is to be avoided wherever practicable. Armor shall be removed from cable installed within the switchboard enclosures.

Instructions for interconnecting wiring including cable and connector sizes shall be shown on switchboard drawings (see 3.12).

3.6.23.4 Buses for each voltage and frequency shall be isolated from all other buses, either by limiting the number of buses to one per switchboard unit or by effecting the maximum practicable separation between multiple buses within a single switchboard unit.

3.6.23.5 Phase rotation and polarity. For a.c., like phases shall be similarly disposed, that is, facing the front of the switchboard or panel, the phase rotation shall be A, B, and C, respectively, from right to left, top to bottom or front to back. For d.c., polarity shall be positive (+), negative (-) from right to left, top to bottom and front to back. Consideration will be given to other arrangements, where they afford copper reduction, improved electrical clearances, or space saving. This requirement applies particularly to bus bars and fuses.

3.6.23.6 Casualty power connection. Provision shall be made on 450 V, 60 Hz buses for connection of a type TSGA-60 cable for casualty power feed. Cable, connectors, and casualty power terminal shall be furnished by the installing activity.

3.6.23.7 Current rating. The current carrying capacity of the bus bars shall be based upon 75 percent of the continuous rating of all connected switches including additional switches. The size of the bus bars shall be selected on a basis of the current-carrying ratings shown in table IV and shall be kept to a minimum as far as practicable. In no case shall the copper be smaller for a given current than the corresponding sizes listed in table IV. The ratings shown are based on a 95°F rise above a 122°F ambient and on the separation or arrangement of phases sufficient to neglect mutual inductance between phases and interference with radiation of neighboring conductors. If the spacing is not large enough to neglect inductance between phases or interference in radiation, an appropriate reduction in the current ratings given in table IV shall be made.

TABLE IV. Ampere rating of rectangular bus bars placed on edge.

Size of bars (inches)	Cross sectional area (in^2)	A.c. ampere rating	D.c. ampere rating
3/4 X 1/8	0.094	210	210
1 X 1/8	.125	285	285
1-1/2 X 1/8	.188	425	425
2 X 1/8	.250	555	555
3/4 X 3/16	.140	265	265
1 X 3/16	.188	355	355
1-1/2 X 3/16	.278	550	550
2 X 3/16	.375	700	710
3/4 x l/4	.188	295	295
1 x 1/4	2.50	410	410
1-1/2 x 1/4	.375	600	600
2 x 1/4	.500	780	800
2-1/2 x 1/4	.625	1,000	1,050

TABLE IV. Ampere rating of rectangular bus bars placed on edge. - Continued

Size of bars (inches)	Cross sectional area (in^2)	A.c. ampere rating	D.c. ampere rating
3 x 1/4	0.750	1,140	1,185
4 x 1/4	1 .000	1,425	1,490
5 x 1/4	1.250	1,760	1,850
6 X 1/4	1.500	2,100	2,190

3.6.23.8 Bus bar stresses. The bus work assembly shall withstand the stresses resulting from the maximum available root mean square (rms) asymmetrical short-circuit current (see 6.2.1). Conditions of H.I. shock which may be encountered aboard the ship shall not mechanically damage the bus work or reduce the bus clearances below minimum requirements. Where single conductor cable is used for connection between bus bars and supply switches, the cable shall be securely bound together with nonflammable cord and secured to the supports as necessary to prevent distortion under short circuit conditions. The binding shall be applied in such a manner that it will not cut into the cable insulation due to the forces exerted under short circuit conditions. The binding shall be especially heavy where cables turn out of the pack. Terminal lugs shall be used for terminating cable at the switch terminals and at the bus bars. Through-bolts shall be used for securing the cable terminal to the bus bars. Not more than two cable terminals shall be clamped by one bolt, and when two are used, they shall be placed on opposite sides of the bus. The cables shall be neatly formed, and where their length exceeds approximately 12 inches, they shall be supported by the switchboard structure. For calculation of required spacing of bus supports to withstand the short circuit current, the value of maximum stress in the outside fiber shall be based on the yield strength of the copper and not upon the tensile strength.

3.6.23.9 Bus bars shall be accurately formed and holes shall be accurately made so as to ensure that the bus bars can be fitted into place without being forced. Flat bends shall have an inside radius of not less than the thickness of bus bar, and the ends of the bus bars shall be neatly finished. Edgewise bends of bars up to 2 inches in width may be made on an inside radius of 1 inch, and those over 2 inches but not exceeding 4 inches in width may be made on an inside radius of 2 inches. Bars of greater width cannot be bent edgewise, but shall be bolted. Bars shall be free from cracks or flaws at bends.

3.6.23.10 Holes in bus bars for bolting may be either punched or drilled, but the contact areas shall be finished true, or an equivalent method employed to give adequate contact. Contact nuts and contact spaced nuts for copper stud contacts shall be of sufficient size to provide the necessary contact surface area.

3.6.23.11 Bolts and nuts, used in bus bar joints shall be of steel, coarse thread series, and plated to protect against corrosion. Flat washers of similarly plated steel shall be used under all bolt heads and nuts adjacent to the conductor. Securing bolts shall be fitted with a securing nut and a lock nut.

3.6.23.12 Bus bar joints shall be made in accordance with Drawing 9000-S6508-73868. The joint shall have sufficient pressure so that the temperature rise in the contact shall not increase the temperature of the bus bar in that area. Care shall be taken not to paint the contact areas.

3.6.23.13 Sufficient spare connecting holes shall be provided in bus bars for changing the phase connections of all switches energized from the buses.

3.6.23.14 Bus bars on switchboards shall have two coats of red colored insulating paint conforming to MIL-E-22118. Coating shall be flexible, tough, and moisture and acid resisting, and have an insulation resistance value of at least 500 V per mil thickness. Two coats each, between 0.004 and 0.006 inch thick, shall be applied. Before painting, burrs and sharp edges shall be removed and bus bars cleaned to remove dust, grease, oil or other foreign material. Coatings shall be applied evenly and be free from pin holes, with special attention given to all edges and projecting parts such as joints, bolts, and nuts. Additional coats shall be applied over these parts as necessary to ensure complete insulation and to prevent entrance of air or moisture to joints. Scratches and mars on bus bar painting and joints disassembled during installation shall be repainted as required for painting bus bars before installation.

3.6.24 Switching and fusing requirements. Due to the variations in size and function of switchboards, no detailed description of switching and fusing requirements is included in this specification. These requirements will be specified on the detail schematic wiring diagrams provided in the ATDP.

3.6.25 Power supply tolerances. Equipment used in the switchboard shall operate within the input power supply tolerances as specified in DOD-STD-1399, section 300 for 115-V 60-Hz type I power unless otherwise specified in the applicable requirements of MIL-STD-1657.

3.6.26 Electrical parts mounting. Small parts, such as resistors and capacitors which are mounted by their leads, shall be mounted on terminal or connection boards in accordance with requirement 5 of MIL-STD-454. Larger parts such as relays, transformers, switches, circuit breakers, and meters, shall be readily removable (that is, not secured by rivets). These parts shall be listed as independent items in the lists of parts (not as part of a subassembly) using the actual manufacturer’s part number.

3.6.27 Wiring. Internal wiring for the switchboard shall be provided by the contractor, and as specified in the ATDP. This shall include:

(a) Internal wiring of panel-mounted assemblies, including linear switch remote control circuit wiring. For switch contact wiring see 3.6.27.4.
(b) Flexible harness wiring between items mounted on the door and connectors or terminal boards mounted on the fixed structure.
(c) Wiring on the modules.
(d) Intersection wiring between sections except where sections are not mounted adjacent to each other.
(e) Wiring for sound powered telephone jack box and switchboard internal light.

3.6.27.1 Grouping of circuits and conductors. Circuits shall be carried through the switchboard on the same type of wire as that of the external ship cable. For example, where a circuit enters the switchboard on a twisted triad shielded cable, the circuit within the switchboard shall be run in a twisted triad cable (type 3SJ of MIL-C-915/60 without the shield) (see 3.6.20.1.3). Where a synchro excitation circuit enters the switchboard on a twisted triad shielded cable, the circuit within the switchboard shall be run in a twisted pair cable (type 2SJ of MIL-C-915/60 without the shield) (see 3.6.20.1.3). Conductors of associated circuits such as synchro excitation, synchro signal, associated reference, and response, and including the shielded connection for shielded circuits to back section module terminals (see 3.6.27.2), shall be connected to adjacent terminals, switch contacts or plug connector contacts. For example, ship wire designations 36GNA11B130, 36GNA11B130R, 36GNA11B130S, 36GNA11B131, 36GNA11B132, 36GNA11B133, 36GNA11B131S, 36GNA11B134, 36GNA11B135, 36GNA11B136, and 36GNA11B134S shall be connected to adjacent terminals on a back section module terminal board.

3.6.27.2 Shielded wiring. Shielded wiring for scaled voltage circuits shall be installed through the back section modules, harness wiring, switches, and other panel assemblies as shown in the ATDP. For other 400 Hz circuits, the ship cable shields shall be terminated and grounded at the back section terminal board or cable connector plug. The method of terminating and grounding shields at cable connector plugs shall be in accordance with Sunbank Drawing SE95, or equal. See figures to requirement 20 of MIL-STD-1657 for typical connections.

3.6.27.3 Harness wiring. Use of preformed cables and wiring harnesses is preferred to the point-to-point method of wiring. The following requirements shall be taken into consideration in fabricating wiring harnesses:

(a) In-line splices shall not be used. Wire shall be crimped as specified in the ATDP. Where LS style switches require a double wire, use MIL-C-28731/23 double contact (see 3.6.10.1).
(b) Wiring from panel-mounted assemblies, circuit breakers, or switches shall connect to back section modules or terminal boards at approximately the same horizontal level.
(c) Wiring between panel-mounted assemblies, circuit breakers, or switches in different horizontal rows shall be kept to the absolute minimum. This wiring, if required, shall be run on the side of the door or in the hinge riser, not on the back of the door.
(d) There shall be a minimum of intersection connections consistent with the requirement of 3.6.3.5.
(e) Flexible harness loop shall have a vertical portion of at least 6 inches in the area of the door hinge to permit twist of the harness. Whenever possible, the flexible harness loop shall be pretwisted so that zero twist shall be at a point equal to half the maximum opening of the door. The vertical riser (if existing) which results from the crossing of the flexible wiring between switches and modules shall be located as shown on the applicable specification sheet. Flexible wiring shall be arranged so that the crossing of wiring in the vertical riser (if existing) is minimized.

(f) Harness wiring between the panel-mounted assemblies, circuit breakers, or switches and module connectors or terminal boards shall be broken down into individual bundles not over 1.75 inches in diameter to permit easy closing of the door. Wiring shall be arranged so that access to individual contacts of the connectors is provided. A minimum of 4 inches of clear space shall be provided between wiring on the back of the door and the modules when the door is closed.

3.6.27.3.1 Wiring shall be arranged to permit bundling by one or more of the following methods:

(a) Binding. Tape for binding shall be as specified in requirement 11 of MIL-STD-454.
(b) Sleeving insulation. Sleeving insulation shall be in accordance with requirement 11 of MIL-STD-454.
(c) Tying. Plastic devices for tying shall be in accordance with MIL-S-23190. When the wire bundle is formed and secured, the device shall not loosen under vibration.

3.6.27.4 Switch contact wiring. For rotary switches, wiring shall be installed between the switch contacts, the panel connector(s) (or terminal board(s)), and other parts mounted within the panel assembly. For linear movement switches, no internal wiring shall be required for the switch contacts.

3.6.27.5 Panel-mounted assemblies. Wiring leaving or entering the panel-mounted assembly shall connect to the connector receptacles, or when the circuit load exceeds 10 A, to the appropriate terminal boards.

3.6.27.6 Interpanel wiring. Wiring between panel-mounted assemblies on the same section shall be routed directly from the connector or terminal board of one assembly to the connector or terminal board of the other assembly.

3.6.27.7 Intersection wiring. Wiring between sections shall be routed from panel assemblies or back section modules directly to the top (A) module connector plug. One module (A) (see MIL-S-17000/1, MIL-S-17000/3, and MIL-S-17000/10 for detail of (A) connector plug) connector plug shall not be used to terminate wiring from both a panel assembly and a back section module. Wiring between sections shall be terminated in connector receptacles with pin contacts.

3.6.27.8 Wiring, both fixed and flexible, shall be protected to prevent chafing and abrasion due to vibration or flexing as required by 3.5.6. Plastic sheaths shall be in accordance with type C of MIL-I-631 and may be similar to a covering known as “Zipper tubing”. A sealing compound shall be used with this tubing. The use of clamps or wrapping and tying devices (see 3.6.27.3.1(c)) with integral mounting facilities is preferred for securing fixed wiring. Metal clamps, if used, shall be insulated and shall not form a complete loop around the wiring.

3.6.28 Wiring space. Provision shall be made for sufficient wireway space within the equipment to facilitate connection (by the installing activity) of the ship cables to the equipment, so that these cables will not result in

restriction of access features. In types II, IV, VI, VII, IX, X, and XII switchboards, provision shall be made for termination of large conductor ship cables as necessary to energize the various switchboard loads (see 3.6.11.4).

3.6.29 Dielectric withstanding voltage and insulation resistance clearances. Clearances between any two electrical circuits or between any electrical circuit and ground (metal enclosure or chassis) shall meet the test conditions for dielectric withstanding voltages specified in 4.6.3. The insulation resistance of the circuits following the dielectric withstanding voltage test shall be not less than 10 megohms when tested as specified in 4.6.4. Creepage and clearance distances between conductors and other conductors, ground, or frame in the equipment shall conform to those listed in requirement 69 of MIL-STD-454 and in no case shall be less than that necessary to prevent arcing or leakage during operation or service.

3.6.30 Printed wiring boards. Printed wiring boards shall be in accordance with MIL-STD-275 and MIL-P-13949. The requirements of MIL-P-55110 are not applicable. Size of printed wiring boards shall be in accordance with those specified in requirement 17 of MIL-STD-454.

3.7 Features - environmental and miscellaneous. The following environmental and miscellaneous features are applicable to the switching equipment specified herein:

3.7.1 The following requirements of MIL-STD-454 are applicable:

Requirement 1 - Safety (personnel hazard)
Requirement 62 - Human engineering

3.7.2 Shock. Equipment shall withstand the shock specified in 4.6.7, without damage or distortion of sufficient magnitude to impair the operation of the equipment contained therein. Minor derangements which do not cause malfunction or inoperation shall be referred to NAVSEA for specific approval of design consideration. Acceptance criteria shall be as specified in MIL-S-901. This test shall be made after all other tests have been concluded l

3.7.2.1 During these tests, circuits as specified in the appendix shall be energized to ensure continuity of the circuits through the switchboard. Failure of the circuits to operate shall not be considered a failure of the switchboard, provided failure was caused by failure of a part, rather than by failure of switchboard wiring.

3.7.3 Vibration. Equipment shall withstand, without mechanical or electrical damage, the vibration specified in 4.6.6. Acceptance criteria shall be as specified in MIL-STD-167-1. During these tests, circuits as specified in the appendix shall be energized to ensure continuity of the circuits through the switchboard. Failure of the circuits to operate shall not be considered a failure of the switchboard, provided failure was caused by failure of a part rather than any failure of switchboard wiring.

3.7.4 Equipment operating temperature and humidity. Equipment shall operate within the temperature range 4 for operating equipment and the humidity specified in MIL-E-16400.

3.7.4.1 Compartment ambient conditions. The equipment shall operate when subjected to the compartment ambient conditions specified in section 204 of MIL-STD-1399. The equipment shall operate at any relative humidity up to 95 percent.

3.8 Wiring fixtures. Wiring fixtures shall consist of dummy back section modules mounted in a frame, thus simulating the back section(s) of the actual production switchboard. Terminal boards or box mounted connector receptacles, without inserts (dummy connector receptacles in accordance with MS3105), for each incoming ship cable shall be mounted on the dummy modules to permit the installing activity to terminate and form up ship cables prior to receipt of the actual switchboard back sections. Mating ship cable connector plugs for each wiring fixture shall be supplied and shipped with the wiring fixture (see 5.1.3). The applicable back section connector location drawing will provide the information regarding the ship connectors required (see 6.2.1). It is not required to paint the wiring fixtures. Wiring fixtures shall be bolted not welded in place.

3.9 Installation and checkout parts. Quantities of parts shall be provided for use during installation and check out (testing) periods (INCO kits) so that use of onboard repair parts will not be required. Quantities of items as listed in table V shall be provided for each switchboard on each ship. These parts are intended for use only by the switchboard service engineers during installation and checkout of the switchboards prior to completion of the ship (see 5.2). Tools and any repair parts remaining after checkout and acceptance of the switchboard will be turned over to the ship.

TABLE V. Installation and checkout repair parts.

Item no.	Part (Each type and rating shall be considered as a separate item)	Quantity required for quantity installed					
		1-3	4-12	13-30	31-60	61-120	121 or more
1	Alarm, bus failure, complete, each type (see note 13)	1	1	1	1	1	1
2	Barrel nut screw-driver (see note 1)		(See note 2)				
3	Capacitor	1	2	3	4	5	6
4	Circuit breaker, when used complete, each rating type ALB	1	1	2	3	3	3

TABLE V. Installation and checkout repair pares. - Continued

Item no.	Part (Each type and rating shall be considered as a separate item)	Quantity required for quantity installed					
		1-3	4-12	13-30	31-60	61-120	121 or more
5	Connector rack and panel and series AN types, removable contact type, complete, less removable contacts	1	1	1	2	3	4
6	Contacts, removable for items 5, 38, and 40		(See note 3)				
7	Coupling (for synchro signal converters)	1	1	2	2	3	4
8	Electron tube		(See note 4)				
9	Filter (item 37)	1	1	2	3	3	3
10	Fuse		(See note 5)				
11	Fuse carrier (less fuse)	1	2	3	5	10	20
12	Fuseholder assembly complete (less fuse)	1	1	1	2	3	6
13	Indicator light assembly or lamp socket (less lamp)	1	1	1	2	3	4
14	Indicator light cap (additional to item 15)	1	1	1	2	3	4
15	Lamp, incandescent		(See note 4)				
16	Lamp, neon	3	6	6	6	6	6
17	Meter, complete (see note 14)	1	1	1	1	1	1
18	Motor, with gear (includes servo motors)	1	1	2	3	3	3

TABLE V. Installation and checkout repair parts. - Continued

Item no.	Part (Each type and rating shall be considered as a separate item)	Quantity required for quantity installed					
		1-3	4-12	13-30	31-60	61-120	121 or more
19	Printed circuit card assembly: Power supply and control	1	1	2	3	3	3
20	Printed circuit card assembly: a.c. flash	1	1	2	3	3	3
21	Printed circuit card assembly: d.c. flash 28 V	1	1	2	3	3	3
22	Printed circuit card assembly: d-c. flash 50 v	1	1	2	3	3	3
23	Relay	1	2	3	3	4	5
24	Repair parts set switching unit, power transfer (see note 12)	1	2	3	3	3	3
25	Resistor or variable resistor	1	2	3	4	5	6
26	Screw, set or stop	1	1	1	2	3	4
27	Semiconductors (rectifiers, diodes)	3	6	10	20	30	40
28	Spring		(See note 6)				
29	Switch, push, or push button (illuminated and nonilluminated)	1	1	1	2	3	4
30	Switch, rotary snap	1	1	1	2	3	4
31	Switch, toggle	1	1	1	2	3	4
32	Switch, style JR	1	1	1	1	2	3
33	Switch, linear movement		(See note 8)				

TABLE V. Installation and checkout repair parts. - Continued

Item no.	Part (Each type and rating shall be considered as a separate item)	Quantity required for quantity installed					
		1-3	4-12	13-30	31-60	61-120	121 or more
34	Switch (other than items 31 through 35)	1	1	1	2	3	4
35	Synchro	1	2	3	3	3	4
36	Taper pin block	0	1	1	1	1	2
37	Terminal board	0	1	1	1	1	2
38	Terminal junction modules with sealing plugs		(See note 9)				
39	Terminal junction	0	1	1	1	2	3
40	Test cables, panel mounted assembly (see note 15)	1	1	1	1	1	1
41	Tools (see note 10)		(See note 11)				
42	Torqsyn	1	2	3	3	3	4
43	Transformer, reactor or coil	1	1	1	1	2	3
44	Transformer protec-tive device; each size, type	1	1	2	2	2	2
45	Trip element for type AQB circuit breaker, when used each rating for each manufacturer	1	2	3	3	3	3

Notes:

1. Barrel nut drive (8 inches) part number 2020581 FSCM 10001. Barrel nut driver (4 inches) part number 2025080 FSCM 10001.
2. One of each size for each switchboard. These items shall be designated operating space item (0SI).
3. Ten plus one for each 100 or fraction thereof installed.
4. One hundred percent installation and checkout parts required.

Notes: (Continued)

5. One hundred fifty percent spare fuses shall be supplied. Fuses shall be supplied in standard commercial boxes of five with a minimum quantity of 15 fuses.
6. Do not provide where installed in a subassembly for which a repair part is provided.
7. One for each 10 or fraction thereof installed.
8. Repair parts for linear movement switches shall consist of the complete assembly (item 33 in table V) and the subassemblies (modules and parts as specified in the applicable specification sheet of MIL-S-24187. Quantities to be supplied for each subassembly or part shall be as specified for the comparable item in table V.
9. Two for each 100 or fraction thereof installed.
10. One of each type of tool required to crimp, insert, and remove the removable contacts provided under item 5. See table VI.
11. Provide one complete set of each type of tool for each switchboard. These tools shall be designated 0SI. See table VI.
12. Repair parts set for switching unit power transfer shall be in accordance with MIL-S-17773.
13. Bus failure alarms which are covered by applicable drawings or which appear in the Federal Supply Catalog are not required to be furnished as repair parts.
14. Only those meters which are used with power conversion equipment controlled from the I.C. switchboards and which are not listed in the Federal Supply Catalog are required to be furnished as repair parts.

150 Panel Mounted Assembly Test Cables shall be in accordance with Drawing 803-5002567: 1 each cable assembly (as required) to be supplied for each switchboard.

3.10 Panel-mounted assembly test cables. Test cables capable of connecting removed panel-mounted assemblies to their associated circuits for maintenance and troubleshooting shall be provided for each switchboard (panel assemblies containing series “AN” connectors do not require test cables) in accordance with Drawing 803-5002567.

TABLE VI. List of required tools in support of switchboard.

Type of tools with MS number or manufacturer's part number					Intended use	
Crimp tool	FSCM	Turret head or die closure	Insertion tool	Extraction tool	Connector type or other 1/ 2/	Contact type
M22520/1-01	81349	M22520/1-02	M81969/17-01	M81969/19-01	M5015 MS3402 (P)	M39029/44-288 (16 AWG) -287 (22 AWG)
M22520/1-01	81349	M22520/1-02	M81969/17-01	M81969/19/01	MS3406 (S)	M39029/45-295 (16 AWG) -294 (22 AWG)
N/A		N/A	N/A	N/A		MS3187-16-2 sealing plugs
P/N 11-7295	77820	N/A	11-7345-16 11-7345-20	11-8250 (KIT)	Bendix (10-214XX type)	
M22520/17-01	81349	N/A	M81969/13-01	M81969/11-01	M28731 (Elco)	M28731/20-0001 (16-26 AWG) Single wire M28731/23-0001 Double wire for:
P/N 06-7749-01	82121	N/A	M81969/13-01	M81969/11-01	1, #16 AWG & 2	1, #20 AWG wire or #18-20 AWG wires
P/N 06-7748-01	82121	N/A	M81969/13-01	M81969/11-01	2, #16 AWG 1, #16 AWG & 2	Wires or #20 AWG wires
M22520/17-02	81349	N/A	M81969/5-01	M81969/4-02		M28731/35
M22520/1-01 M22520/1-01	81349	M22520/1-03 M22520/1-03	M81969/18-01 M81969/18-01	M81969/20-01 M81969/20-01	M28748 (P) (104 Pin)	M39029/36-278 (16 AWG) -277 (20 AWG)

TABLE VI. List of required tools in support of switchboard. - Continued

Type of tools with MS number or manufacturer's part number					Intended use	
Crimp tool	FSCM	Turret head or die closure	Insertion tool	Extraction tool	Connector type 1/ or other 2/	Contact type
M22520/1-01 M22520/1-01	81349	M22520/1-03 M22520/1-03	M81969/18-01 M81969/18-01	M81969/20-01 M81969/20-01	(S)	M39029/37-280 (16 AWG) -279 (20 AWG)
M22520/34/01 M22520/34-01	81349	M22520/34-02 M22520/34-02	M81969/33-01 M81969/33-01	M81969/34-01 M81969/34-01	M28840 (P) (Hi-Density)	M39029/83-508 (20 AWG) -450 (22 AWG)
M22520/34-01 M22520/34-01	81349	M22520/34-02 M22520/34-02	M81969/33-01 M81969/33-01	M81969/34-01 M81969/34-01	(S)	M39029/84-509 (20 AWG) -451 (22 AWG)
N/A		N/A	N/A	N/A		MS27186-1 Sealing plugs
M22520/1-01	81349	M22520/1-02	M81969/14-02	M81969/14-02	Relay socket (S) (Deutsch EL 410-14)	M39029/5-116 (16 AWG) -117 (20 AWG)
M22520/1-01	81349	M22520/1-02	M81969/14-03	M81969/19-08	Socket (S) MS12883/41-01	MS39029/32-247 Relay
M22520/1-01	81349	M22520/1-02	M81969/17-04 M81969/17-09	M81969/19-08 M81969/19-07	Relay socket (Viking)	P/N 019-0215-002 #16-20 AWG
P/N 8601-51	14195	N/A	N/A	P/N 8601-61	T-Bar Relay	P/N #8601-1
P/N 90221-1	00779	N/A	N/A	N/A	Indicator/ (S) Switch (Korry)	P/N 650907-1

TABLE VI. List of required tools in support of switchboard. - Continued

Type of tools with MS number of manufacturer's part number					Intended use	
Crimp tool	FSCM	Turret head or die closure	Insertion tool	Extraction tool	Connector type or other 1/ 2/	Contact type
M22520/5-01	81349	M22520/5-100			Terminal lug	MS17143
					Terminal lug	MIL-C-5/1F
					Terminal lug	MIL-T-7928/1
					Terminal lug	MIL-T-7928/2
					Splice	MIL-T-7928/3
					Splice	MIL-T-7928/5
					Splice	MS25181
					Splice	MS27429
					End cap	MS25274
						MIL-E-16366 or equal
					Ferrules	Inner MS21981 / Outer MS18121
M22520/5-01	81349	M22520/5-19				-134 / -255
	81349	M22520/5-43				-156 / -232
	81349	M22520/5-35				-175 / -287
	81349	M22520/5-47				-205 / -312
					(Used for shield terminations of shielded wires)	

TABLE VI. List of required tools in support of switchboard. - Continued

Tools, other:	FSCM	Type of tool	Intended use
M22520/3-1	81349	Inspection gage	Used to inspect basic tool M22520/1-01
M22520/18-1	81349	Inspection gage	Used to inspect tool M22520/17-01
M22520/3-9 & 10	81349	Inspection gage	Used to inspect tool M22520/5-100
P/N 11-7634-16 11-7634-20	77820 77820	Inspection gage	Used to inspect Bendix Crimper, P/N 11-7295
P/N 8601-71	14195	Connector tongs	Used to insert/extract T-Bar relay connector
P/N 11-6147-1 or equivalent	77820	Knurled ring pliers	Used to grip the knurled ring of AN type (5015) connectors; securing/removal.
P/N 2020581	10001	Barrel nut driver (9 inches)	Used to install/withdraw barrel nuts on terminal boards
P/N 2020580	10001	Barrel nut driver (4 inches)	Used to install/withdraw barrel nuts on terminal boards

Notes:

1/ When using, 5015 type connectors or equivalent, a complete set of tools shall be supplied for that type of connector.

2/ (S) - Socket (P) - Pin

3.11 Services. When specified (see 6.2.1), the services of a competent engineer shall be furnished for checking and placing switching equipment in a satisfactory operating condition. Due to the complicated nature of the systems involved, these services are considered essential, and special attention is invited to this requirement. The establishment of a competent engineering service department will be considered as a condition precedent to bidding on switching equipment. The Government may conduct such investigations as may be considered necessary to establish the competency of engineering services of a contractor. Travel orders of field engineers shall contain information similar to figure 5. These services shall consist of the following:

(a) Installing connecting wiring between front and back sections and between the sections of a switchboard (preformed factory wiring).
(b) Ensuring proper operation of switchboard equipment (remote operated switches, relays and power supplies).
(c) Correction of switchboard manufacturing errors which may exist in spite of thorough checking of drawings and equipment.
(d) Installing system changes which occur in the late stages of the overall control system installation and which timewise cannot be immediately incorporated in the manufacturer's drawings nor in the switchboard prior to the system circuit tests.
(e) Modifying wiring as necessary during the system circuit test to ensure compatibility with control system equipment. These changes occur because of the on-the-spot changes by equipment manufacturer's engineers to make individual control systems equipment function properly. Such changes shall be recorded by the engineer at the time of the change and both the contractor and the contracting officer shall be immediately informed of the changes in order to ensure the accuracy of switchboard documentation.
(f) Ensuring that a complete, up-to-date set of the electrical drawings in 6.5.9.1 through 6.5.9.7 for each switchboard is made available to the ship just prior to the builder's trials. These prints shall be obtained from the reproducible copies provided the installing activity and marked up to include any changes made during the last stages of completion of the ship.

3.11.1 Engineering service reports shall be prepared in accordance with the data ordering document included in the contract (see 6.2.2). An engineering service report shall be prepared for each trip made in connection with switchboard modifications of other services relating to installation, checkout, or tests of switching equipment. The report shall be submitted as specified in the data ordering document included in the contract or order. In the event that services exceed one week, a weekly report shall be submitted within one week after the end of the work week. Reports shall contain the following information submitted on a form similar to figure 6.

(a) Activity visited.
(b) Dates and times of arrival and departure.
(c) Description of work accomplished (for example, routine checkout, installed Field Change No. _____, dressed switchboards, cleared casualties or corrected discrepancies found during shipboard

system circuit test), with a narrative technical report on problems encountered (such as improper installation or connection of ship wiring, damage to switchboard during installation, missing or delayed material that is affecting completion of modifications), recommendations made or actions taken for their solution.

(d) Authority for trip, types of hours worked, contract number, ship(s) worked on.

3.11.2 A monthly engineering service report on the status of unexpected services shall be submitted by the manufacturer prior to the 10th day of the succeeding month containing the following information:

(a) Amount of engineering services and support (overtime, travel, subsistence) under the contract.
(b) Amount of engineering services and support expended at each activity on a weekly basis, for the period covered by the report.
(c) The unexpended balance of engineering service time and support remaining under the contract.

3.12 Drawings. The contractor shall prepare drawings in accordance with the data ordering documents included in the contract or order (see 6.2.2). In addition to the drawing content required by the data order documents (see 6.2.2), the features specified in 3.12.1 through 3.12.1.6 shall be included. A complete set of drawings shall be submitted. Drawings previously submitted under earlier contracts may be used whenever applicable, but shall be re-submitted for approval under the instant contract.

3.12.1 Mechanical drawings. The contractor shall prepare drawings as specified in 3.12.1.1 through 3.12.1.6 covering the mechanical features of the switchboard to provide the following information:

(a) To permit the contracting activity to determine that the switchboard design complies with the requirements of this specification and when applicable to document switchboard designs submitted for qualification testing.
(b) To provide the installing activity with accurate information regarding mounting bolt hole and sway brace bolt hole locations.
(c) To provide maintenance and supply activities with detail information regarding parts used in the switchboard and to determine the interchangeability of the various panel-mounted assemblies.

3.12.1.1 Mechanical assembly drawing. Mechanical assembly drawing shall include dimensioned outline front view, plan view, end views, and such other views as are required to show clearly the details of mechanical design, construction, and assembly of one complete switchboard section. An assembly drawing shall also be prepared for a control indicator. This drawing shall be titled “Type 11 switchboard section assembly” for example.

3.12.1.2 Switchboard overall assembly drawing. Overall assembly drawing shall show the overall dimensions, foundation bolt hole locations, and clearances required for the complete switchboard. Weight and location of the center of gravity of the switchboard, the location of the sway brace mounting holes, heat dissipation, and location and purpose of the connector box for the internal light shall be shown on this drawing. When applicable, the Mark and Mod number of the switchboard shall be shown. Parts list shall identify each panel-mounted assembly installed in the switchboard. Diameter, type, quantity, and torque values required for foundation and intersection fastening hardware shall be Shewn. A note for the installing activity shall reference Publication NAVSEA SE 670-FO-MMD-010/Swbds for installation criteria. A separate drawing shall be prepared for each different switchboard, each control indicator, or each remote operated switch assembly on each contract.

3.12.1.3 Panel-mounted assemblies. These drawings shall depict the mechanical design, construction, and assembly of panel-mounted assemblies, including basic or blank panel assemblies. These drawings shall include views depicting parts and a tabulation of the specific parts for each panel-mounted assembly. Marking information of description plates shall be shown either on the individual assembly drawing or on a combined marking information drawing. Overall dimensions of the assembly shall be shown.

3.12.1.4 Subassemblies and mechanical details. Drawings shall be prepared to show the complete details of parts (such as designation plates, front panel, and chassis) and assemblies such as module assemblies that are not clearly shown on other drawings. Overall dimensions of each subassembly shall be shown in addition to these details. Parts from vendors, when shown as part of a subassembly shall be listed as independent items on the parts list.

3.12.1.5 Part identification. Each replaceable part shall be identified with the following and include the maximum information that may be necessary to define the required data on at least one of the drawings specified in 3.12.1.1 through 3.12.1.4.

(a) Nomenclature or description.
(b) Military part number.
(c) Part or identifying number as used by the actual manufacturer of the part (not the switchboard manufacturer's part number unless the part is made by the switchboard manufacturer).
(d) Actual manufacturer's name or code identification number.
(e) Government specification number or MS sheet number (for example) (or commercial designations where there is no applicable Government specification).
(f) Material (unless the item is an assembly using several materials).
(g) Mechanical, electrical, and physical characteristics.
(h) National stock number (if available).

The above information may be tabulated in a parts list on an assembly or subassembly drawing (such as a switch assembly or module assembly) or shown on the detail drawing of the part. Where several assemblies requiring varying numbers of the same parts are shown on a drawing, each part shall be listed only once in the parts list, each assembly shall be assigned a number and the "No. Reqd."

column shall be replaced by a "No. Reqd. for No. _____" column for each assembly. The unit weight and stock number need not be listed Each wire type and the approximate total length of each type used shall be listed.

3.12.1.6 Parts list (parts population). Manufacturer shall prepare a tabulation of parts used on the switchboards being furnished on the contract. This tabulation shall show the quantities used on each individual switchboard.

3.12.2 Preparation of drawings. In addition to the requirements of the data ordering documents, the features specified in 3.12.2.1 through 3. 12.2.5.5 shall be included in the drawings specified in 3.12.1.1. through 3.12.1.6.

3.12.2.1 Size. The maximum size of original drawings shall be size H with a maximum length of 88 inches. All sheets of a multisheet drawing shall be the same size. Size E drawings shall not be used. (See ANSI Y14.1 for description of size E and H drawings.)

3.12.2.2 Prints for submittal. Prints made to be submitted for approval shall be approximately 11 by 34 inches with borders not less than 10-1/2 inches high.

3.12.2.3 Detail accuracy. Drawings of assemblies or subassemblies shall be correct in content and details to permit checking for interference or mis-mating or working parts.

3.12.2.4 Drawing numbering and titles. All sheets of a multisheet drawing shall have the same basic title. Subtitles may be used on other than the first sheet to locate major features. The title shall clearly indicate the infor-mation shown on the drawing. Multisheet drawings shall bear the same drawing number followed by sheet 1, sheet 2, sheet 3, and so on. Only the first sheet shall show the total number of sheets. Drawing numbers assigned by the manu-facturer shall not contain prefix or suffix letters that could be confused with drawing size or revision letters. The first sheet of multisheet drawings shall include a tabulation "Revision status of sheets" showing the revision letter of each sheet. This tabulation shall be located immediately over the title block. Title blocks of continuation sheets shall be in accordance with ANSI Y14.1.

3.12.2.5 Revision of drawings.

3.12.2.5.1 Revision of a drawing will be issued as a Notice of Revision (NOR) showing only the area of the drawing affected by the change in the contract or order (see 6.2.2).

3.12.2.5.2 The revision block of revised drawings shall show the basic authority for the change. The "Revision status of sheets" block (see 3.12.2.4) shall show the revision status of each sheet.

3.12.2.5.3 Drawings shall be revised prior to modification of the equip-ment and submitted as specified in the contract prior to their release for use in modifying the equipment. For urgent modifications of equipment, authority to proceed with the work prior to drawing revision shall be obtained from the contracting activity. Where drawings are "approved subject to modifications", they shall be revised and distributed for information to the destinations

specified in the contract. Where an Engineering Change Proposal (ECP) is authorized for use on a contract, all drawings affected shall be revised and resubmitted for approval to the destinations specified in the contract or order (see 6.2.2). After drawings have been approved, no changes shall be initiated by the contractor without resubmission of the revised drawing for approval of the change. Where drawings are revised for reasons other than authorized modification (such as developments necessary to comply with the intent of the contract, for proper and satisfactory completion of the contract, contractor initiated design improvements or simplification for manufacturing purposes), the letter forwarding the revised drawings shall cite the approved ECP which covers the modification.

3.12.2.5.4 The file number, serial number, and date of acceptance letter shall be entered in the revision column of the drawings. The drawings shall then be redistributed in accordance with the requirements of the contract.

3.12.2.5.5 The record of previous revisions on drawings shall be retained when these drawings are revised for final delivery in the contract or order (see 6.2.2).

3.13 Workmanship. Workmanship shall be in accordance with requirement 9 of MIL-STD-454.

4. QUALITY ASSURANCE PROVISIONS

4.1 Responsibility for inspection. Unless otherwise specified in the contract or purchase order, the contractor is responsible for the performance of all inspection requirements as specified herein. Except as otherwise specified in the contract or purchase order, the contractor may use his own or any other facilities suitable for the performance of the inspection requirements specified herein, unless disapproved by the Government. The Government reserves the right to perform any of the inspections set forth in the specification where such inspections are deemed necessary to assure that the supplies and services conform to prescribed requirements.

4.1.1 Quality program. The contractor shall provide and maintain a quality program acceptable to the Government for supplies and services covered by this specification as specified in the contract or order (see 6.2.1).

4.2 Classification of inspection. The inspection requirements specified herein are classified as follows:

(a) Qualification inspection (see 4.3).
(b) Quality conformance inspection (see 4.4).

4.3 Qualification inspection. Qualification inspection shall be conducted at a laboratory satisfactory to NAVSEA. Qualification inspection shall consist of the examination and tests shown in table VII.

TABLE VII. Qualification inspection.

Examination and tests	Requirement paragraph	Test reference
General examination	3.4 through 3.7.4 and 3.13	4.5
Circuit	3.6.24	4.6.1
Supply line voltage and frequency variation	3.6.25	4.6.2
Transients	3.6.25	4.6.8
Dielectric withstanding voltage	3.6.29	4.6.3
Insulation resistance	3.6.29	4.6.4
Wire pull out tests	3.6.6 and 3.6.10	4.6.5
Enclosure	3.5.2.2.1, 3.5.2.2 and 3.5.2.4	4.6.9 and 4.6.1.1
Vibration	3.7.3	4.6.6
Equipment operating temperature and humidity	3.7.4	4.6.10
Shock	3.7.2	4.6.7

4.3.1 Qualification sample. One sample switchboard section constructed in accordance with the appendix will be required for qualification inspection.

4.3.2 Extension of qualification. Qualification of the sample switchboard section specified in 4.3.1 will be extended to include qualification approval for all types of switchboards covered by this specification.

4.3.3 Authorization for qualification inspection. Prior to authorization of qualification inspection, drawings covering the overall mechanical assembly, structural details, module assemblies, and panel-mounted assemblies of the sample switchboard section shall be submitted to NAVSEA for review.

4.4 Quality conformance inspection.

4.4.1 Inspection. Each switching equipment shall be subjected to the examination and tests shown in table VIII. Failure to conform to this specification for any examination or test shall be counted as a defect, and the switching equipment shall be rejected.

TABLE VIII. Quality conformance inspection.

Examination and tests	Requirement paragraph	Test reference
General examination	3.4 through 3.7.4 and 3.13	4.5
Circuit test	3.6.24	4.6.1
Supply line voltage and frequency variation	3.6.25	4.6.2
Dielectric withstanding voltage	3.6.29	4.6.3
Insulation resistance	3.6.29	4.6.4
Wire pull out tests	3.6.6 and 3.6.10	4.6.5
Switchboard section alinement	3.5.2.4.1	4.6.1.1

4.4.2 Test conditions. Except for those tests where the following factors are the variables, tests shall be conducted with the equipment operating under the following conditions:

(a) Ambient temperature and humidity shall be between 70 and 80°F and the relative humidity shall be between 25 and 50 percent.
(b) Supply voltage shall be the nominal operating voltage.
(c) Supply frequency shall be the nominal operating frequency.

4.5 General examination. The completed unit shall be given a thorough examination to determine that it conforms to the applicable specification and drawings with respect to material, finish, workmanship, construction, assembly, dimensions, weight, and marking of identification and description plates. This examination shall be limited to those that can be performed without disassembling the unit in such a manner that its performance, durability, or appearance would be affected. This examination shall include a check of operating controls, circuit functions, synchro connections for compliance with requirement 2 of MIL-STD-1657, test facilities, and adjustments, as applicable.

4.6 Tests.

4.6.1 Circuit tests. Circuit tests shall be performed by the use of appropriate test equipments. Tests specified in 4.6.3 and 4.6.4 (dielectric withstanding voltage and insulation resistance tests) may also be performed by this test equipment during the circuit tests (see 4.6.3.1). When used for tests outlined in 4.6.1.1, the test equipment shall be connected to the ship wire terminals or ship cable connectors on the modules. Remote operated switch assemblies, relays, flasher, and similar items, shall be electrically operated at least ten times, either during production tests on the individual items or as part of the hot tests required in 4.6.1.1(b). These tests shall be conducted to ensure that short circuits are not present in the equipment.

4.6.1.1 Switchboards. Each switchboard of one or more sections shall be completely assembled and interconnected and tested for the features listed below:

(a) "Cold'* tests. Continuity shall be checked for circuits that do not connect to a conversion device (such as a signal generator, transformer, or synchro signal converter) to determine that the signals are transmitted in accordance with the requirements specified on the detail schematic wiring diagrams. Discontinuity shall be checked by repositioning switches and removing fuses in the circuit to verify power interruption in accordance with the requirements specified on the detail schematic wiring diagrams. The circuits shall be tested to ground to verify proper isolation from ground.
(b) "Hot" tests. Operation of switchboard units and related circuitry (such as remote operated switch assemblies, relays, signal generators, meters, lights, power supplies, flashers) and synchro signal converters) shall be checked to verify proper operation of the unit and related circuitry in accordance with the requirements specified on the detail schematic

wiring diagrams. During these tests, each supply voltage shall be applied to the switchboard as appropriate for the conduct of the tests. At some time during these tests, all supply voltages shall be applied simultaneously.

4.6.1.2 Control indicators. Each unit shall be tested for circuit continuity (to determine conformance with switching functions shown on guidance drawings) and absence of shorted or grounded circuits.

4.6.2 Supply line voltage and frequency variation. The tolerances specified in 3.6.25 shall be used as test settings for the purpose of determining that performance meets specification requirements of the various panel mounted assemblies (such as rectifiers, signal generators, synchro signal converters) under supply line voltage and frequency variations.

4.6.3 Dielectric withstanding voltage. Dielectric strength between electrical circuits, and between electrical circuits and ground, shall be tested with a nominal sinusoidal source of 60 Hz having a capacity of at least 1 kilowatt. Rms values of test voltages shall be as shown in table IX. The dielectric withstanding voltage test shall not be applied to circuitry which includes parts which would normally be damaged by the test voltages, such as synchro, transistors, electrolytic capacitors, diodes and other voltage sensitive components. Equipment shall be subjected to one high voltage test of the applicable voltage specified herein. In dielectric tests, the voltage shall be raised gradually to the specified value and shall be held at that value for the periods specified in 4.6.3.2.

TABLE IX. Dielectric withstanding voltages.

Circuit voltage of equipment tested	Rms of dielectric test voltage
volts	volts
Less than 60	450
60 to 120	900
Above 120 and less than 240	1200
240 to 480	1500
Above 480	Twice rated voltage plus 1000

4.6.3.1 When the dielectric withstanding voltage and insulation resistance tests are not performed as part of the circuit continuity test (see 4.6.1.1), each control indicator or section of a switchboard shall be tested separately. Terminals of the unit or assembly intended for connection to external wiring shall be tested and all switches (except spring-return to-off types) shall be in fully “on” positions for these tests.

4.6.3.2 For the dielectric withstanding voltage test conducted as part of qualification inspection, the test voltage shall be held at the specified value for 1 minute + 5 seconds. For the dielectric withstanding voltage test conducted as part of quality conformance inspection, the test voltage shall be held at the specified value for 5 $\pm$ 1 second.

4.6.4 Insulation resistance test. Insulation resistance of electrical circuits following the dielectric withstanding voltage test specified in 4.6.3 shall be tested at 50 V d.c. at room ambient temperature and humidity to determine conformance with 3.6.29. Insulation resistance test voltage shall not be applied to circuitry which includes parts which would normally be damaged by the test voltage, such as synchro, transistors, electrolytic capacitors, diodes and other voltage sensitive components.

4.6.5 Wire pullout tests. Daily production check tests of the quality of crimped connections for connector contacts and solderless wire terminal lugs shall be made. Approximately ten crimps of each type (connector or wire terminal) made each day shall be checked for pullout (crimp, tensile strength) in accordance with MIL-C-28731, MIL-C-39029, MIL-T-16366, or MIL-T-7928, as applicable.

4.6.6 Vibration test. Vibration test to determine conformance with 3.7.3 shall be conducted in accordance with type I (environmental vibration) of MIL-STD-167-1, except that the variable-frequency test shall be omitted. After the tests, the circuits shall be checked to ensure proper operation and continuity (see 6.2.2).

4.6.7 Shock test. Shock test to determine conformance with 3.7.2 shall be conducted in accordance with type A, class I of MIL-S-901. After the tests, the circuits shall be checked to ensure proper operation and continuity. Units which have been subjected to the shock test shall not be installed on board ship. A shock test report shall be prepared in accordance with the data ordering document included in the contract or order (see 6.2.2).

4.6.8 Transient test. A l-millisecond pulse of a magnitude sufficient to provide 300 percent over voltage of the peak supply voltage shall be superimposed on the nominal supply voltage to the switchboard. The output of the equipment power supply shall be observed on a calibrated oscilloscope to determine conformance with 3.6.25. With a constant power supply input, the output of the equipment power supply shall be observed on a calibrated oscilloscope, while the equipment is switched through all operational modes to determine conformance with 3.6.25.

4.6.9 Enclosure test. Watertight requirements shall be subjected to the test conditions in MIL-STD-108, except that the requirement for breaking and reassembling joints sealed by gaskets prior to test applies only to cover or door openings, not indicator or observation windows. Dripproof enclosures shall be visually examined to verify that the unit conforms to the applicable assembly drawing.

4.6.10 Equipment operating temperatures. The applicable component specifications (for example, MIL-S-24187) shall be reviewed to verify that the various components have been operated at temperatures and humidities equal to or exceeding those specified for temperature range 4 for operating equipment in MIL-E-16400.

4.6.11 Geometric control of enclosures. After completion of the installation of all panel assemblies, back section modules, and harness wiring, the individual front and back sections of each switchboard shall be assembled on a common foundation. Individual sections shall be bolted to the foundation and to each other using the intersection fastening hardware required to be shipped

with the switchboards. Flatness, perpendicularity, and parallelism of the overall switchboard shall conform to 3.5.2.2. Assembly procedure outlined in NAVSEA SE 670-FO-MMO-O10/Swbds shall be followed.

4.7 Test procedures and test reports. The contractor shall prepare test procedures and test reports in accordance with the data ordering documents included in the contract or order (see 6.2.2).

4.8 Inspection of packaging. Sample packages and packs and the inspection of the preservation-packaging, packing, and marking for shipment and storage shall be in accordance with the requirements of section 5 and documents specified therein.

5. PACKAGING

(The preparation for delivery requirements specified herein apply only for direct Government acquisition. For the extent of applicability of the preparation for delivery requirements of referenced documents listed in section 2, see 6.4.)

5.1 Switchboards and control indicators. Types II, IV, VI, VII, VIII, IX, X, XI, and XII switchboard sections, types III, V, and XI switchboards, and control indicators shall be prepared for delivery in accordance with the requirements specified in 5.1.1 through 5.1.2.2 for the level of shipment as specified (see 6.2.1).

5.1.1 Packaging.

5.1.1.1 Level A. Packaging shall be in accordance with submethod IIa of MIL-P-116. An inspection window shall be required.

5.1.1.2 Level C. Packaging shall protect against corrosion, deterioration, and physical damage during shipment from the supply source to the using activity.

5.1.2 Packing. Types II, IV, VII, VIII, IX, X, and XII switchboards shall be placed in the shipping containers horizontally or vertically. Type VI switchboard sections may be placed in the shipping containers on a side. Drip shields shall be packed with the switchboard.

5.1.2.1 Level A. Each type II, IV, VI, VII, VIII, IX, X, XI, and XII switchboards shall be packed horizontally or vertically in boxes conforming to type I of MIL-B-26195. Each box shall be provided with an inspection window with readily removable cover opposite the inspection window in the barrier bag (see 5.1.1.1). Each type III, V, and XI switchboard and each control indicator shall be packed in a box conforming to overseas type of PPP-B-601 or class 2 of PPP-B-621.

5.1.2.2 Level C. Types II, IV, VI, VII, VIII, IX, X, XI, and XII switchboards packaged as specified (see 5.1.1.2), shall be mounted horizontally or vertically on wood shipping skids of a type and style to ensure acceptance by common carrier and to permit forklift truck handling from either side. Type III, V, and XI switchboards and control indicators shall be packed to ensure acceptance by common carrier and in compliance with the Uniform Freight Classification Ratings, Rules, and Regulations.

5.1.3 Packing of barrel nuts, intersection fastening hardware, and mating ship connector plugs. Barrel nuts and connector plugs required for connection of ship wires to back section terminal boards and connector receptacles, respectively, shall be packed in the same box as the associated back section. Barrel nuts shall be packaged in sturdy textile bags, one size per bag. Connector plugs shall be packaged method IC in accordance with MIL-P-116. Intersection fastening hardware shall be packaged in sturdy textile bags and packed in the same box as the front section.

5.2 Installation and checkout repair parts. Installation and checkout repair parts (INCO KITS) shall be preserved and packaged level A and packed level A or C in accordance with the requirements of MIL-STD-794 for the shipment levels as specified (see 6.2.1). The level of packaging shall be the same as that specified for the switchboard or control indicator. Installation and checkout repair parts shall be packed in a separate shipping container and shipped to the installing activity in care of the Receiving Officer,

5.3 Drawings. Drawings shall be prepared for delivery as specified (see 6.2.1).

5.4 Marking. In addition to any special marking required by the contract (see 6.2.1), interior packages and shipping containers shall be marked for shipment for levels A, B, and C in accordance with MIL-STD-129.

6. NOTES

6.1 Intended use. Equipment covered in this specification is intended to interconnect, protect, and provide fault isolation in the electrical circuits of Naval shipboard fire control systems, command and control systems, interior communication systems and combat systems.

6.2 Ordering data.

6.2.1 Acquisition requirements. Acquisition documents should specify the following:

(a) Title, number, and date of this specification and the applicable specification sheet.
(b) Type switchboard (see 1.2.1) and control indicator (see 1.2.2) required (see 3.1).
(c) Number of sections required (see 3.1).
(d) Detail mechanical requirements of type IX switchboards (see 3.1).
(e) Type of cable entrance required into control indicator (see 3.1).
(f) Whether dripproof or watertight requirements is required (see 3.5.2.4.2).
(g) Whether a nonstandard (right side) hinge on a switchboard section door is required (see 3.5.2.7).
(h) Whether a card holder is required (see 3.5.2.13).
(i) Whether revision record card is required (see 3.5.10.4).
(j) Power supplies and parts required for switchboard (see 3.6.1).
(k) Additional master switch requirements (see 3.6.3.11.1).

(l) Whether provision is to be made for connection of bus failure alarm (see 3.6.4.3).
(m) Whether ships cable connectors are required for control indicators (see 3.6.6.3).
(n) Bus bar stresses (see 3.6.23.8).
(o) Number of wiring fixtures required, if any (see 3.8).
(p) Engineering services required (see 3.11).
(q) Quality program in accordance with MIL-Q-9858 (see 4.1.1).
(r) Levels of packaging, packing, and marking required (see 5.1, 5.2, 5.3, and 5.4).
(s) Listing of applicable electrical drawings to be included in the ATDP provided with the IFB (see 6.5.9).

6.2.2 Data requirements. When this specification is used in an acquisition which incorporates a DD Form 1423, Contract Data Requirements List (CDRL), the data requirements identified below shall be developed as specified by an approved Data Item Description (DD Form 1664) and delivered in accordance with the approved CDRL incorporated into the contract. When the provisions of DAR 7-104.9 (n)(2) are invoked and the DD Form 1423 is not used, the data specified below shall be delivered by the contractor in accordance with the contract or purchase order requirements. Deliverable data required by this specification is cited in the following paragraphs.

Paragraph no.	Data requirement title	Applicable DID no.	Option
3.6.2	Nonstandard part approval requests/proposed additions to an approved program parts selection list	DI-E-7028	---
3.11.1	Report, contractor engineering and technical services (CETS)	UDI-E-23127	---
3.12	Drawings, engineering and associated lists	DI-E-7031	Level 2 Design activity designation - contractor Drawing number - contractor Delivery of hard copies - contracting activity
3.12.2.5.1	Notice of revision/ specification change notice	DI-E-1126	---
3.12.2.5.3	Engineering change proposals (ECPs) and requests for deviations and waivers (long form)	DI-E-2037	---

Paragraph no.	Data requirement title	Applicable DID no.	Option
3.12.2.5.5	Status summary, engineering change documentation	UDI-23149	---
4.6.6	Report, vibration testing	UDI-T-23762	---
4.6.7	Reports, equipment shock test	UDI-T-23753	---
4.7	Procedures, test	UDI-T-20503	---
4.7	Reports, test	DI-T-2072	---
3.1101	Report, failure/malfunction	UDI-T-23724	---
3.11.1	Report, failed item analysis	DI-R-7039	---

(Data item descriptions related to this specification, and identified in section 6 will be approved and listed as such in DoD 5000.19L., Vol. II, AMSDL. Copies of data item descriptions required by the contractors in connection with specific acquisition functions should be obtained from the Naval Publications and Forms Center or as directed by the contracting officer.)

6.2.2.1 The data requirements of 6.2.2 and any task in section 3, 4, or 5 of this specification required to be performed to meet a data requirement may be waived by the contracting/acquisition activity upon certification by the officer that identical data were submitted by the offeror and accepted by the Government under a previous contract for identical item acquired to this specification. This does not apply to specific data which may be required for each contract regardless of whether an identical item has been supplied previously (for example, test reports).

6.3 With respect to products requiring qualification, awards will be made only for products which are, at the time set for opening of bids, qualified for inclusion in applicable Qualified Products List QPL-17000 whether or not such products have actually been so listed by that date. The attention of the contractors is called to these requirements, and manufacturers are urged to arrange to have the products that they propose to offer to the Federal Government tested for qualification in order that they may be eligible to be awarded contracts or purchase orders for the products covered by this specification. The activity responsible for the Qualified Products List is the Naval Sea Systems Command, SEA 5523, Department of the Navy, Washington, DC 20362, and information pertaining to qualification of products may be obtained from that activity. Application for qualification tests shall be made in accordance wit-h “Provisions Governing Qualification SD-6" (see 6.3.1).

6.3.1 Copies of “provisions Governing Qualification SD-6” may be obtained upon application to Commanding Officer, Naval Publications and Forms Center, 5801 Tabor Avenue, Philadelphia, PA 19120.

6.4 Sub-contracted material and parts. The preparation for delivery requirements of referenced documents listed in section 2 do not apply when material and parts are acquired by the contractor for incorporation into the equipment and lose their separate identity when the equipment is shipped.

6.5 Definitions. For the purposes of this specification, the definitions specified in 6.5.1 through 6.5.9.8 shall apply.

6.5.1 Switchboard. A switchboard is a device which contains such items as switch assemblies, panel assemblies, switches, fuses, monitoring instruments, terminal boards, and wiring with associated framework and enclosure and which is used specifically to energize, switch, protect, and coordinate shipboard control circuits or equipment. A switchboard may consist of one or more sections.

6.5.2 Switchboard section. A switchboard section is a self-contained structure composed of a front section and a back section. The front section consists of a complete framework on which are mounted panels containing equipment such as switch assemblies, indicator lights, fuses, relays, and other items as required for energizing, protecting, connecting and coordinating shipboard control circuits or equipment. The panels may be mounted on a hinged door with the connections to the back section made by connectors to the flexible wiring harness. The back section may be separable (for example, attached by bolts) from the front section or it may be a completely separate section. The back section consists of a complete framework on which are mounted modules containing terminal boards or connectors for connecting to ship wiring and connectors for connecting to the front section harness wiring.

6.5.2.1 Door. A door is a framework supporting an assembly of switches, indicator lights, relays, and other items that make up a switching system. Its components are connected to ship wiring by means of flexible wiring harness to the back section modules.

6.5.3 Switch assembly. A switch assembly is a mechanical grouping of one or more switches associated with accessories, such as remote operating mechanism, wiring, connectors, fuses, and indicator lights. The components may be fixed or joined into an assembly which may be removed readily as a unit from the parent switchboard.

6.5.4 Panel assembly. A panel assembly is a mechanical grouping of one or more components fixed or joined into a unit that may be readily removed from the parent switchboard. See MIL-STD-1657 for a description of the types of panel assemblies used.

6.5.5 Control indicator. A control indicator is an item which performs the essential, dual function of presenting visual information from, and regulating the mode of operation of, another equipment.

6.5.6 Set-up control system. A set-up control system is one which permits the operator to effect any predetermined control switching pattern with one operation, such as pushing a button.

6.5.7 Switch, programming. A programming switch is a remote operated switch which is positioned by a pushbutton or switch from a remote station and which in turn operates other remote operated switch assemblies throughout the ship to establish a predetermined control switching pattern. Programming switches may be incorporated in switchboards or control indicators.

6.5.8 Description plate. A description plate is a plate that is marked to show panel assembly number, panel assembly nomenclature, and switch operating position information. The switch position dial is also a description plate.

6.5.8.1 Revision record card. A revision record card is a description plate that will contain a list of the detail schematic wiring diagrams, the front panel layout, back section terminal layout or back section connector location drawings with the revision letter of each drawing.

6.5.9 Acquisition technical data package. The Acquisition Technical Data Package (ATDP) to be provided by the Government with an Invitation for Bids (IFB) will consist of the data list, a set of detail schematic wiring diagrams, the front panel layout, the back section terminal layout or back section connector location, the wiring details, the parts list (electrical), and a mechanical guidance drawing. The content and purpose of these drawings is defined in 6.5.9.1 through 6.5.9.8. The electrical drawings will contain all termination data required to completely wire the switchboard. These drawings *will be* assigned Government drawing numbers and will be under the configuration control of the Government (see 6.2.1).

6.5.9.1 Data list. The data list provided in the ATDP should be updated by the switchboard manufacturer to include all drawings applicable to the switchboards under the contract along with the titles and revision letters of the added drawings. Government standard drawings (such as Drawing 815-1853048 covering LS switches) shall be included.

6.5.9.2 Detail schematic wiring diagrams. Detail schematic wiring diagrams (DSWD's) shall be in the form shown in requirement 20 of MIL-STD-1657. DSWD's shall contain the applicable rear terminal, rear module connector, panel connector, internal switch contact, internal panel assembly and intersection connector-designations for each circuit through the switchboard as described in requirement 20 of MIL-STD-1657.

6.5.9.3 Front panel layout. Front panel layout drawing shall show the location of panel-mounted assemblies on the switchboard. The function of each part (fuse, indicator light, relay, transformer, or circuit breaker) and legend of each switch description plate shall be shown.

6.5.9.4 Back section terminal arrangement (types II, III, VI, VIII, X and XI switchboards. Arrangement of back section terminal boards (modules shall show the position and designation of terminals to which ship wiring is connected. Ship wire designations shall be shown with the corresponding terminal board terminals. Internal switchboard wiring that connects to the back section terminal boards shall be shown.

6.5.9.5 Back section connector location.

6.5.9.5.1 Type IV, V, and XII switchboards. This drawing shall show the location, shell size, and insert rotation of ship cable connectors for each section. The ship cable number and type shall be shown.

6.5.9.5.2 Type VIII switchboards. This drawing shall show the panel number and switch assembly connector receptacle number with the corresponding ship cable number arranged in panel number sequence.

6.5.9.6 Wiring details. A tabulation shall list each segment of internal switchboard wiring in a form that can be used to actually wire the switchboard. In addition to the component identification and connection points, this tabulation shall include the wire type, size, and color. These tabulations shall be arranged in three groups: the back section module wiring details, the internal wiring details of panel-mounted assemblies other than linear movement switch control circuit wiring (such as meter panels), and harness wiring details from panel-mounted assembly connectors to module connectors, or other panel-mounted assembly connectors. Internal control circuit wiring details of linear movement switches are specifically omitted since this wiring is identical for all switches.

6.5.9.7 Parts list (electrical). This drawing shall be a tabulation of the electrical parts required in a switchboard such as number and types of switches, connectors, fuses, fuseholders, relays, indicator lights, and terminal boards. This drawing is provided for information only.

6.5.9.8 Mechanical guidance drawing. This drawing shall contain requirements for the mechanical configuration of the switchboard.

6.6 Provisioning. Provisioning Technical Documentation (PTD), spare parts, and repair parts should be furnished as specified in the contract.

6.6.1 When ordering spare parts or repair parts for the equipment covered by this specification, the contract should state that such spare parts and repair parts should meet the same requirements and quality assurance provisions as the parts used in the manufacture of the equipment. Packaging for such parts should also be specified.

6.7 Cross-reference of classification. Table X lists the switchboard types covered by the superseded specifications together with the new types covered in this specification.

TABLE X. Cross-reference of classifications.

MIL-S-17000M	MIL-S-82525A	MIL-S-15001G	MIL-S-17000N	Description	Remarks
1/	A	----	Not used	Switchboard, surface ship, deck-mounted, (terminal board connected) (reversible back section)	Superseded b type II of MIL-S-17000
II	----	----	II	Switchboard, surface ship, deck-mounted (terminal board connected)	No change
III	C	----	III	Switchboard, surface ship, bulkhead-mounted, (terminal board connected)	No change
IV	B	----	IV	Switchboard, surface ship, deck-mounted, (plug connected)	2/
V	D	----	V	Switchboard, surface ship, bulkhead-mounted, (plug connected)	No change
VI	----	----	VI	Switchboard, surface ship, deck-mounted, two separate sections, (terminal board and plug connected)	No change
----	F	----	VII	Switchboard, surface ship, deck-mounted, power distribution, (terminal board connected)	No change
----	G	----	VIII	Switchboard, surface ship, deck-mounted, digital switching, (plug connected)	No change
----	E	----	IX	Switchboard, submarine	No change

TABLE X. Cross-reference of classifications. - Continued

MIL-S-17000M	MIL-S-82525A	MIL-S-15001G	MIL-S-17000N	Description	Remarks
----	----	----	X	Switchboard, surface ship, deck-mounted, combat systems, interior communication, (terminal board connected)	New type
----	----	II	XI	Switchboard, surface ship, bulkhead-mounted interior-communication, (terminal board connected)	No change
----	----	I	XII	Switchboard, submarine, deck-mounted, command and control (plug connected)	New type

1/ Type I switchboard of MIL-S-17000L replaced by type II switchboard of MIL-S-17000N.
2/ MIL-S-17000N, type IV switchboard is similar to MIL-S-82525A, type B with intersection connection module similar to MIL-S-17000L, type IV.

6.8 Changes from previous issue. Asterisks are not used in this revision to identify changes with respect to the previous issue due to the extensiveness of the changes.

Preparing activity:
Navy - SH
(Project 1290-N376)

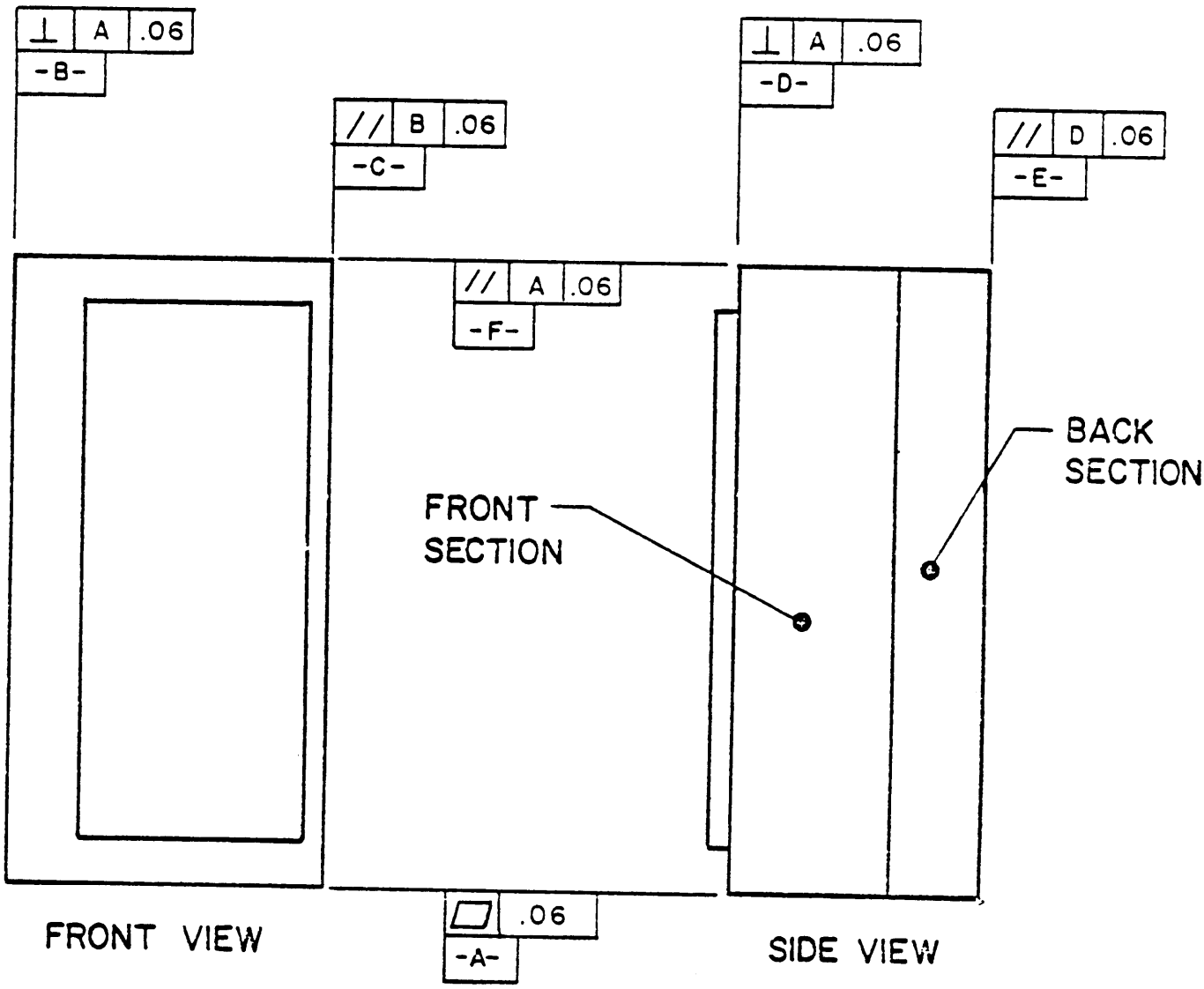

FIGURE 1. Geometric control diagram deck mounted switchboard.

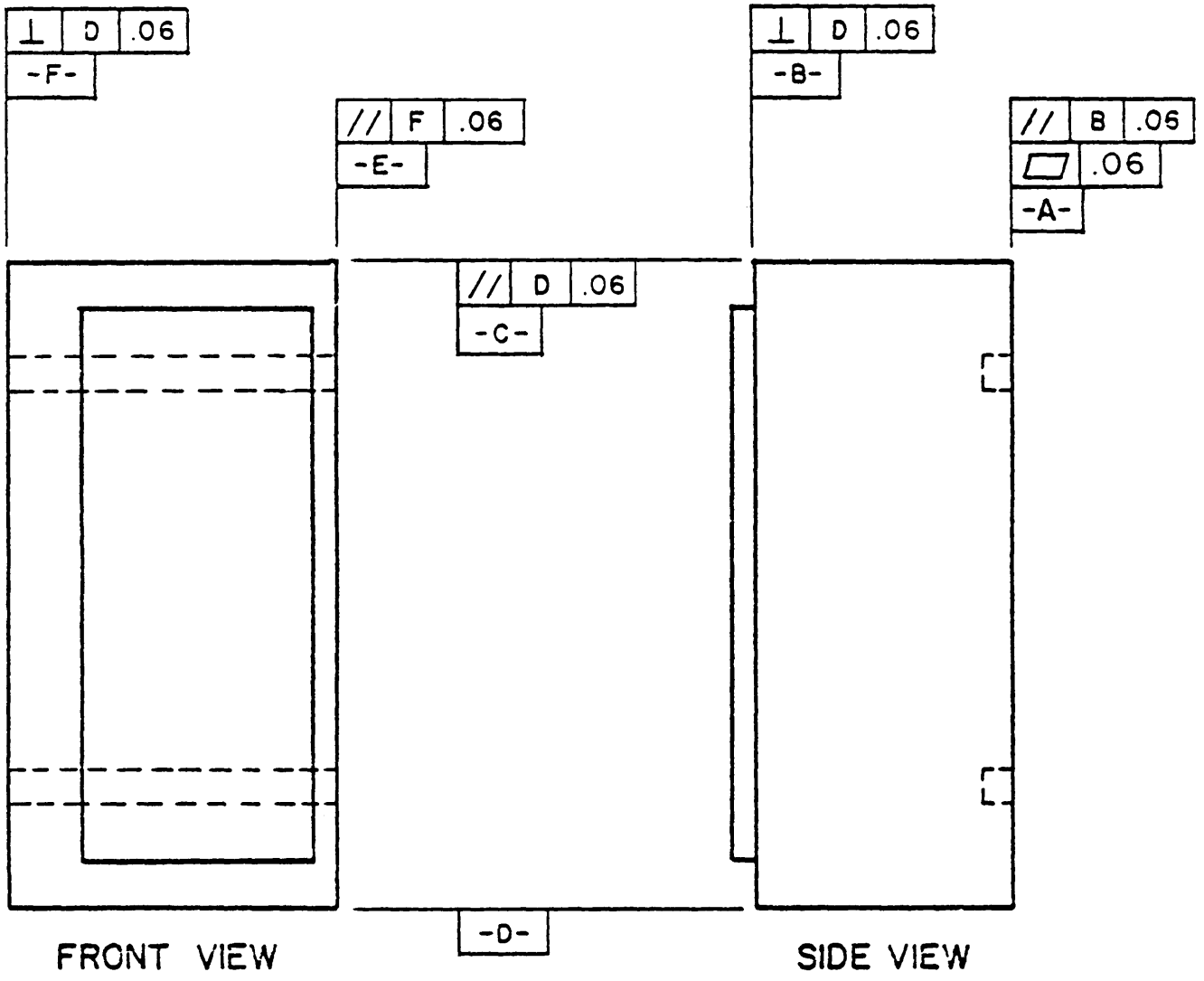

FIGURE 2. Geometric control diagram bulkhead mounted switchboard.

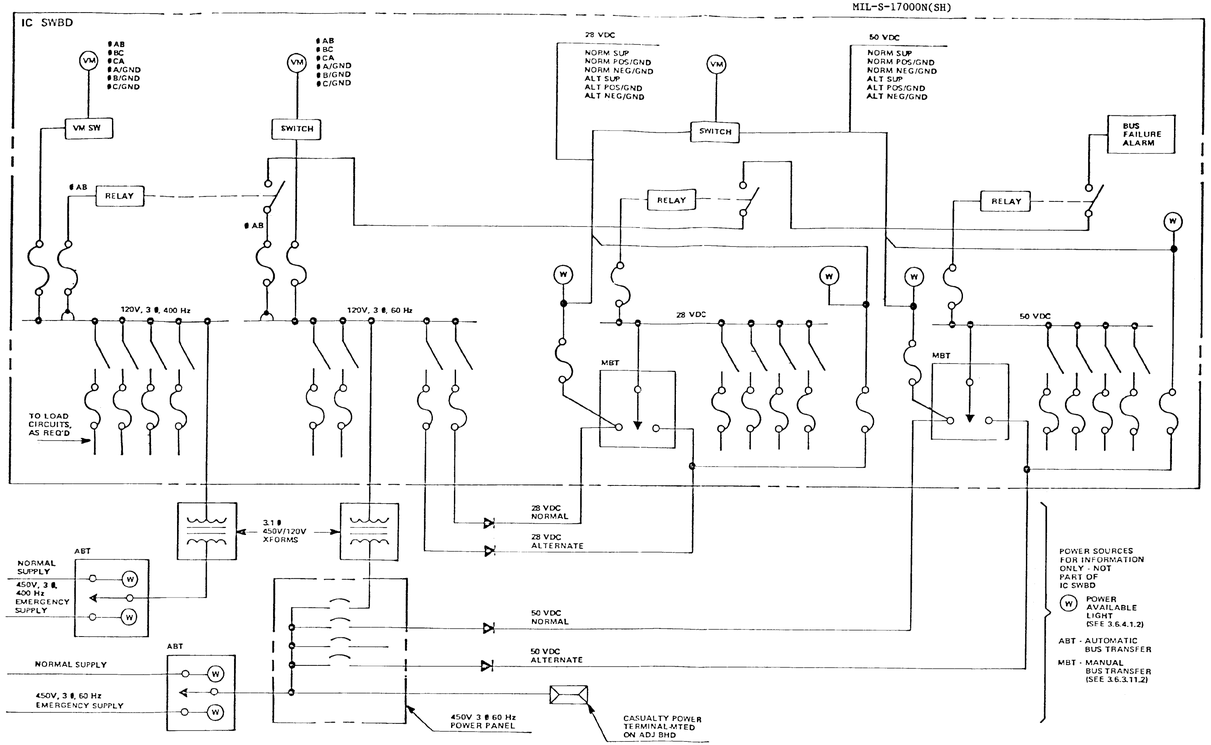

FIGURE 3. I.C. deck mounted type switchboard - typical power supplies.

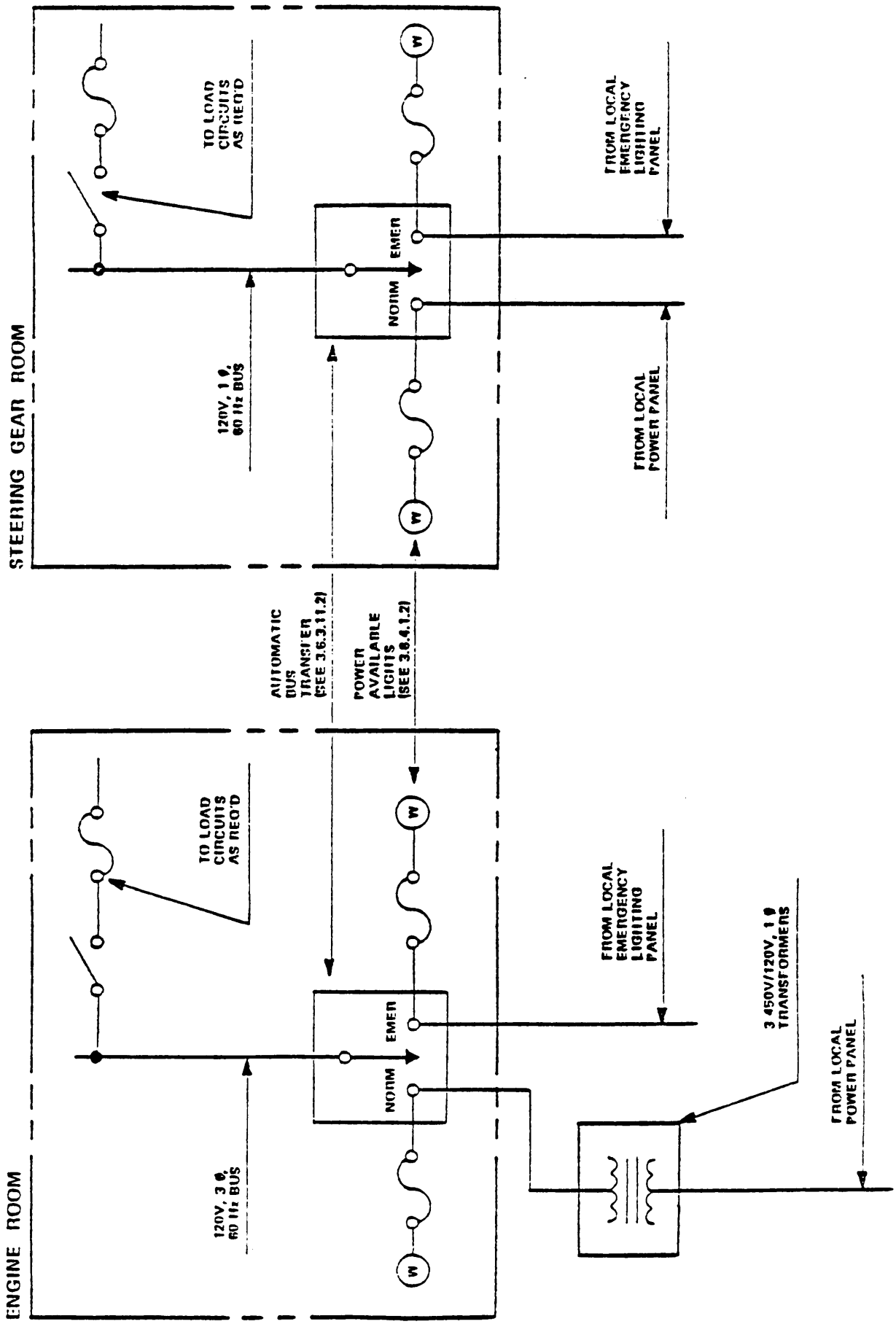

TRAVEL ORDERS
Form No. 1

John Jones Company
123 Center Street
Chicago, ILLinois

Date:
TRAVEL ORDERS

TO:

SUBJECT: Field Engineering Services

1. You are hereby assigned to Field Service as set forth below. Any requests for an extension of the service period or for work not authorized under the contract must be forwarded in writing by the responsible yard authority to Commander, Naval Sea Systems Command, Department of the Navy, Washington, DC 20362, before such work can be performed.

20 You are hereby relieved from your present assignment as of 1700 on _____l

3. These orders supersede all others you may have.

TRAVEL	From:				
	To:				
Travel By	Train	Plane	Private Auto $ ./mile.	Security Classification	
Place of Service:					
Report to:			Code:	Bldg:	
Contract N00024			Ship(s):		
Period of Service Scheduled:					
Authority for Trip:					

WORK TO BE PERFORMED

DESCRIPTION	CONTRACT ITEM NO.	AUTHORIZED
8 Hour Man-Day. Day Shift. Mon-Fri		
8 Hour Man-Day. Night Shift. Mon-Fri		
Overtime in excess of 3 hours. Mon-Fri		
Overtime, All Hours Saturday		
Overtime, All Hours Sunday		
Sea Duty, Special Rate		
Transportation to and from Yards		
Local Transportation at Yard		

(4) Addressee
(4) Arrival Yard

(1) NAVSEA Code 6131
(1) NAVSEA Code 613

Very truly yours,

JOHN JONES COMPANY

SH 11494

FIGURE 5. Sample travel order form.

ENGINEERING SERVICE REPORT
Form No. 2

John Jones Company
123 Center Street
Chicago, Illinois

Please write legibly
This Form Must be
Reproduced

Ships _____ Location _____
Call requested by _____ Week ending _____

STATEMENT OF WORK AND MATERIAL FURNISHED:

ABC Shipbuilding Co. BB 60: Field Change T7 was completed on all boards. The ship is now up to date.

UB Boards: The doors and frames were secured to the deck plates and sway-brace bar after alterations to both were accomplished. All clearances were adequate and no binding was noted.

NOTE: THERE ARE FOUR BROKEN BACK SECTION TERMINAL STRIPS IN THE UB BOARD. OTHER DAMAGED OR MISSING PARTS INCLUDE A SPLIT FUSEHOLDER, MISSING HARDWARE, ETC. BECAUSE NO CONSTRUCTION SPACES HAVE BEEN PROVIDED BY CONTRACT.

SUCH CASUALTIES, ALTHOUGH MINOR IN NATURE, PRESENT PROBLEMS WHICH REQUIRE A CONSIDERABLE AMOUNT OF TIME TO CORRECT, i.e., THE TIME REQUIRED TO PROCURE REPLACEMENT PARTS. IT IS URGENTLY RECOMMENDED, THEREFORE, THAT A CONSTRUCTION SPARE KIT BE SUPPLIED FOR EACH SHIP BEING BUILT.

Dressing of door cables, jumpers etc., continued on all boards.

XYZ Naval Shipyard-DD720: Relaved construction information to shipyard personnel. The connection of ship wires to the back sections continued on all three back sections.

NAVSEA Authority:

TIME RECORD	"M	T	w	Th	F	Sa	Su	Shift	Totals
Regular Hours									
Overtime Hours									

Navy Approval

THE ABOVE MATERIAL RECEIVED AND WORK PERFORMED TO MY SATISFACTION

Signed _____ Position _____ Signed for _____ Date _____

Approved for John Jones Co.
By _____ Date _____ By _____ Service Representative
Date _____

Company Distribution
Contracts ( ) Finance ( ) Department Head ( )

This Form to be prepared in TRIPLICATE by Service Representative with acceptance indicated by signature of Authorized personnel. One DUPLICATE copy to be retained by the Approving Activity.

SERVICE CALL No. _____

Navy Distribution
(1) NAVSEA Code 6131
(1) NAVSEA Code 613

SH 11495

FIGURE 6. Engineering service report.

APPENDIX

SWITCHBOARD, SURFACE SHIP, DECK MOUNTED (TERMINAL BOARD - PLUG CONNECTED), QUALIFICATION SAMPLE

10. SCOPE

10.1 Scope. This appendix details the requirements for the construction of a sample switchboard for submission to qualification tests as specified in this specification.

20• APPLICABLE DOCUMENTS

20.1 Government documents.

20.1.1 Specifications and standards. Unless otherwise specified, the following specifications and standards of the issue listed in that issue of the Department of Defense Index of Specifications and Standards (DoDISS) specified in the solicitation form a part of this appendix to the extent specified herein.

SPECIFICATIONS

MILITARY

MIL-S-24187/l - Switch Assemblies, Linear Movement, Manual and Remote Operation, Style LS.

MIL-C-28748/9 - Connectors, Electrical, Rectangular, Rack and Panel, Polarized Center Jackscrew or Guidepin Style, Crimp Type Removable Pin Contacts, Size 16.

MIL-T-55164/13 - Terminal Boards, Molded, Barrier, Stud Type, Class 7TB.

STANDARDS

MILITARY

MIL-STD-1657 - Switching Equipment, Combat System, Command and Control, and Fire Control, Requirements for.

MS3402 Connectors, Receptacle, Electric, Box Mounting, Front Release, Crimp Contact, AN Type.

MS3409 Connectors, Plug Electric, 45 Degree Assembly, Crimp Contacts, AN Type.

(Copies of specifications and standards required by manufacturers in connection with specific acquisition functions should be obtained from the contracting activity or as directed by the contracting officer.)

300 REQUIREMENTS

30.1 Switchboard section frame. A type II switchboard section frame shall conform to the design shown on the applicable specification sheet (see supplement 1), modified as shown on figure 7.

30.2 Modules. Two modules shall be provided and located as shown on figure 7. The modules shall be as specified in 30.2.1 and 30.2.2.

30.2.1 Module B shall contain one terminal board (type 7TB12) in accordance with MIL-T-55164/13 and one module connector receptacle in accordance with MIL-C-28748/9 (part number M28748/09FoNo1A). Weights shall be provided on this module to simulate 21 type 7TB12 terminal boards, two harness connectors, and the associated wiring.

30.2.2 Module D shall contain one MS3402D22-14P box mounted connector, one MS3409D22-14S connector plug, one taper pin block in accordance with requirement 3 of MIL-sTD-1657, and one module connector receptacle in accordance with MIL-C-28748/9 (part number M28748/09FONOlA). Weights shall be provided on this module to simulate four MS3402D40-56P and MS3409D40-56S connectors, 15 taper pin blocks, two harness connectors, and the associated wiring.

30.3 Module wiring. Module wiring shall be in accordance with the following:

(a) Wiring from the 7TB12 terminal board to the module connector receptacle shall be installed on module B.
(b) Wiring from the 20 circuits of the taper pin block shall be installed between the ship and the module connector receptacles for module D.
(c) For module D, adequate slack shall be left in the wiring to the taper pin block from the ship connector and the module connector so that the front panel of the module will be able to swing down to a 130-degree opening.

30.4 Harness wiring. Flexible harness wiring bundles, containing 312 conductors from each module, shall be installed from modules B and D to the panel mounted assemblies, and interconnected as shown on figure 8.

30.5 Panel-mounted assemblies. Panel-mounted assemblies listed below shall be provided and located as shown on figure 7. Panel-mounted assemblies shall be in accordance with the applicable requirements of MIL-sTD-1657. These panel assemblies shall be interconnected as shown on figure 8.

(a) One type R3LS4 switch (see 30.7).
(b) One indicator light panel. (Requirement 8)
(c) One meter panel. (Requirement 10)
(d) One relay and fuse panel. (Requirement 6)
(e) One switch potential transformer panel. (Requirement 11)
(f) One dual switch panel. - This panel shall be similar to the snap switch panel of requirement 18 of MIL-STD-1657 using one type S3JK3 switch and one type 1SR2E2 switch.

30.6 Spare panel spaces. The remaining full depth panel spaces in the front section shall be loaded with weights simulating type RLS remote operated switch assemblies. These weights shall be distributed over the full depth of the door to accurately simulate the full weight of the switches, the associated plug connectors, and flexible harness wiring (see figure 7).

30.7 Remote operated switch assembly. The remote operated switch assembly installed in the switchboard shall be in accordance with MIL-S-24187/l.

30.8 Switchboard section shall be assembled in the manufacturers plant.

NOTES:

1. ALL DIMENSIONS ARE IN INCHES.
2. REFERENCE DRAWING - SWITCHBOARD ENCLOSURE 815-185321.
3. STRUCTURE SHALL BE IN ACCORDANCE WITH MIL-S-17000.
4. PANEL MOUNTED ASSEMBLIES SHALL BE IN ACCORDANCE WITH MIL-STD-1657.
5. METRIC EQUIVALENTS ARE GIVEN FOR GENERAL INFORMATION ONLY AND ARE BASED UPON 1 INCH = 25.4 mm. DIMENSIONS IN [ ] ARE MILLIMETERS.

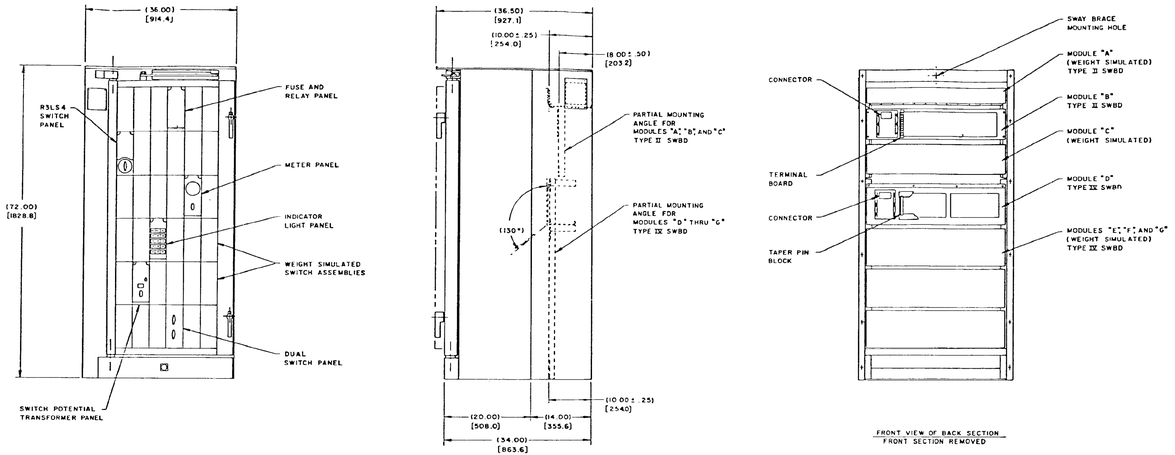

SH 11496

FIGURE 7. Qualification sample.

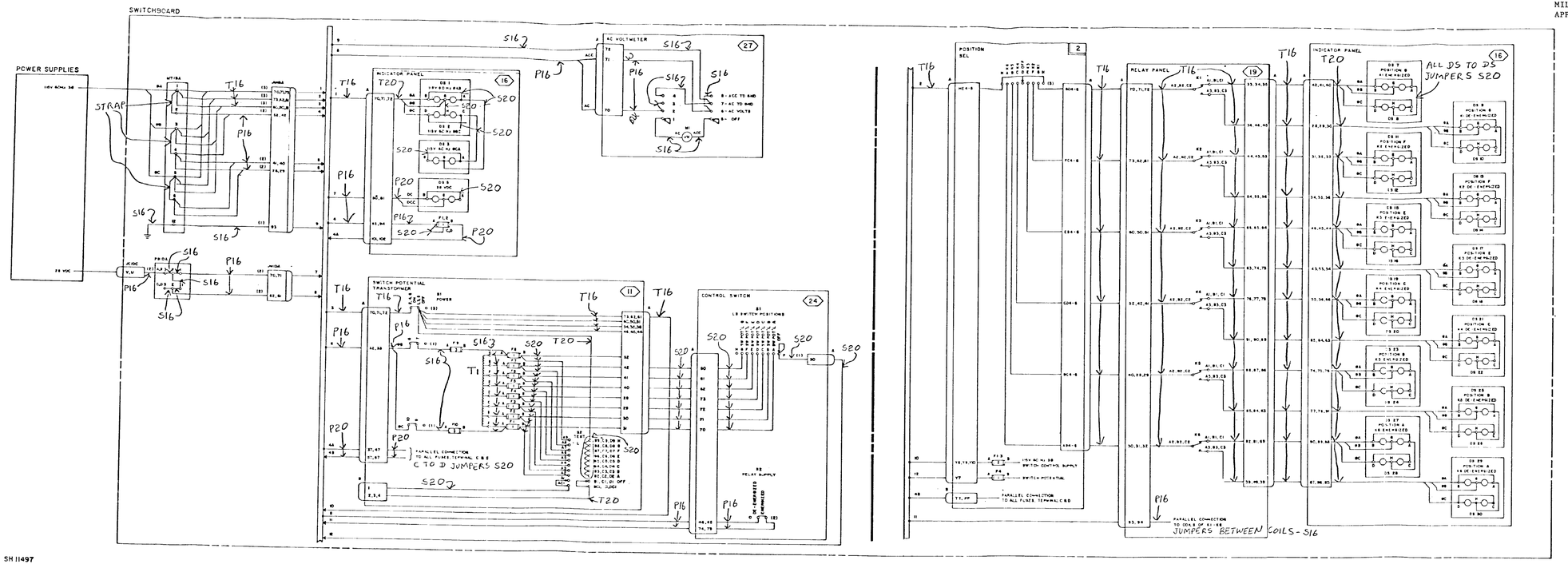

SH 11497

FIGURE 8. Qualification sample - wiring diagram.

INDEX

INDEX

INDEX

INDEX

INDEX

INDEX

FIGURES

INDEX

Page

TABLES

APPENDIX

☆ U.S. GOVERNMENT PRINTING OFFICE: 1983-605-034/2564

INSTRUCTIONS: In a continuing effort to make our standardization documents better, the DoD provides this form for use in submitting comments and suggestions for improvements. All users of military standardization documents are invited to provide suggestions. This form may be detached, folded along the lines indicated, taped along the loose edge *(DO NOT STAPLE)*, and mailed. In block 5, be as specific as possible about particular problem areas such as wording which required interpretation, was too rigid, restrictive, loose, ambiguous, or was incompatible, and give proposed wording changes which would alleviate the problems. Enter in block 6 any remarks not related to a specific paragraph of the document. If block 7 is filled out, an acknowledgement will be mailed to you within 30 days to let you know that your comments were received and are being considered.

NOTE: This form may not be used to request copies of documents, nor to request waivers, deviations, or clarification of specification requirements on current contracts. Comments submitted on this form do not constitute or imply authorization to waive any portion of the referenced document*(s)* or to amend contractual requirements.

(Fold along this line)

(Fold along this line)

DEPARTMENT OF THE NAVY
COMMANDER
NAVAL SEA SYSTEMS COMMAND (SEA 55Z3)
DEPARTMENT OF THE NAVY
WASHINGTON, DC 20362

OFFICIAL BUSINESS
PENALTY FOR PRIVATE USE $300

NO POSTAGE NECESSARY IF MAILED IN THE UNITED STATES

BUSINESS REPLY MAIL
FIRST CLASS PERMIT NO. 12503 WASHINGTON D. C.
POSTAGE WILL BE PAID BY THE DEPARTMENT OF THE NAVY

COMMANDER
NAVAL SEA SYSTEMS COMMAND (SEA 55Z3)
DEPARTMENT OF THE NAVY
WASHINGTON, DC 20362

STANDARDIZATION DOCUMENT IMPROVEMENT PROPOSAL

(See Instructions – Reverse Side)

1. DOCUMENT NUMBER MIL-S-17000N(SH)	2. DOCUMENT TITLE Switching Equipment, Combat Systems, Command And Control, Fire Control, And Interior Communication Gen Spec For
3a. NAME OF SUBMITTING ORGANIZATION	4. TYPE OF ORGANIZATION *(Mark one)* ☐ VENDOR ☐ USER ☐ MANUFACTURER ☐ OTHER *(Specify)*:
b. ADDRESS *(Street, City, State, ZIP Code)*	

5. PROBLEM AREAS

a. Paragraph Number and Wording:

b. Recommended Wording:

c. Reason/Rationale for Recommendation:

6. REMARKS

7a. NAME OF SUBMITTER *(Last, First, MI)* – Optional	b. WORK TELEPHONE NUMBER *(Include Area Code)* – Optional
c. MAILING ADDRESS *(Street, City, State, ZIP Code)* – Optional	8. DATE OF SUBMISSION *(YYMMDD)*

DD FORM 82 MAR 1426

PREVIOUS EDITION IS OBSOLETE.