MIL-S-12158D(AT)
13 June 1988
SUPERSEDING
MIL-S-12158C(AT)
8 March 1968

MILITARY SPECIFICATION

SEALING COMPOUND, NON-CURING, POLYBUTENE

This specification is approved for use within the US Army Tank-Automotive Command, Department of the Army, and is available for use by all Departments and Agencies of the Department of Defense.

1. SCOPE

1.1 Scope. This specification covers two types of mastic sealing compounds. The sealing compounds are polybutene based and non-curing (see 6.1).

1.2 Classification. Sealing compounds shall be of the following types, as specified (see 6.2):

Type I - Flange sealer
Type II - Fording sealer

Beneficial comments (recommendations, additions, deletions) and any pertinent data which may be of use in improving this document should be addressed to: US Army Tank-Automotive Command, ATTN: AMSTA-GDS, Warren, MI 48397-5000, by using the self-addressed Standardization Document Improvement Proposal (DD Form 1426) appearing at the end of this document or by letter.

AMSC N/A FSC 8030

2. APPLICABLE DOCUMENTS

2.1 Government documents.

2.1.1 Specifications and standards. The following specifications and standards form a part of this specification to the extent specified herein. Unless otherwise specified, the issues of these documents shall be those listed in the issue of the Department of Defense Index of Specifications and Standards (DODISS) and supplement thereto, cited in the solicitation.

SPECIFICATIONS

FEDERAL

QQ-A-250/5	- Aluminum Alloy Alclad 2024, Plate and Sheet.
CCC-C-419	- Cloth, Duck, Cotton, Unbleached, Plied-Yarns, Army and Numbered.

MILITARY

MIL-C-5541	- Chemical Conversion Coatings on Aluminum and Aluminum Alloys.
MIL-A-8625	- Anodic Coatings, for Aluminum and Aluminum Alloys.
MIL-P-23377	- Primer Coatings: Epoxy-Polyamide, Chemical and Solvent Resistant.
MIL-C-46168	- Coating, Aliphatic Polyurethane, Chemical Agent Resistant.
MIL-P-53022	- Primer, Epoxy Coating, Corrosion Inhibiting, Lead and Chromate Free.
MIL-P-53030	- Primer Coating, Epoxy, Water Reducible, Lead and Chromate Free.
MIL-C-53039	- Coating, Aliphatic Polyurethane, Single Component, Chemical Agent Resistant.

STANDARDS

FEDERAL

FED-STD-595	- Colors.

MILITARY

MIL-STD-193	- Painting Procedures and Marking for Vehicles, Construction Equipment and Material Handling Equipment.
MIL-STD-45662	- Calibration Systems Requirements.

(Copies of specifications and standards required by the contractors in connection with specific acquisition functions should be obtained from the contracting activity or as directed by the contracting activity.)

2.2 Other publications. The following document forms a part of this specification to the extent specified herein. Unless otherwise specified, the issues of the documents which are DOD adopted shall be those listed in the issue of the DODISS specified in the solicitation. Unless otherwise specified, the issues of documents not listed in the DODISS shall be the issue of the nongovernment documents which is current on the date of the solicitation.

AMERICAN SOCIETY FOR TESTING AND MATERIALS (ASTM)

ASTM D217 - Cone Penetration for Lubricating Grease, Test Methods for.

(Application for copies should be addressed to American Society for Testing and Materials, 1916 Race Street, Philadelphia, PA 19103.)

(Nongovernmental standards and other publications are normally available from the organizations which prepare or which distribute the document. These documents also may be available in or through libraries or other informational services.)

2.3 Order of precedence. In the event of a conflict between the text of this specification and the references cited herein (except for associated detail specifications, specification sheets or MS standards), the text of this specification shall take precedence. Nothing in this specification, however, shall supersede applicable laws and regulations unless a specific exemption has been obtained.

3. REQUIREMENTS

3.1 First article. Unless otherwise specified (see 6.2), the contractor shall furnish samples, of the specified type of sealing compound (see 6.2), which shall be subjected to first article inspection (see 4.4). First article inspection samples, properly marked with identifying information shall be representative of the sealing compound to be furnished to the Government. All subsequent sealing compound delivered to the Government shall conform to these samples in all of their pertinent physical and performance attributes.

3.2 Materials. The materials used in the sealing compound shall be polybutene base together with such other ingredients as are necessary to produce sealing compound conforming to the requirements of this specification (see 4.8.1).

3.2.1 Recycled, virgin and reclaimed materials. There are no requirements for the exclusive use of virgin materials. The use of recycled or reclaimed (recovered) materials is acceptable provided that all other requirements of this specification are met (see 6.3.1).

3.3 Physical properties.

3.3.1 Penetration.

3.3.1.1 Type I. When tested as specified in 4.8.3.1, the penetration value of the sealing compound shall be 265 ± 35 tenths of a millimeter (mm).

3.3.1.2 Type II. When tested as specified in 4.8.3.1, the penetration value of the sealing compound shall be 150 ± 15 tenths of a millimeter.

3.3.2 Storage stability. After being subjected to the test specified in 4.8.3.2, the storage stability (change in penetration) of the sealing compound shall not exceed 12 percent (%) of the values specified in 3.3.1 (see 4.8.3.2).

3.3.3 Liquid separation. After the sealing compound has been subjected to the test specified in 4.8.3.3, the volume of liquid separation shall not exceed 0.1 milliliter (ml) (see 4.8.3.3).

3.3.4 Extreme temperature resistance. The sealing compound shall not crack, flake or rupture after being exposed to extreme temperatures ranging from 158 ± 2 degrees Fahrenheit (°F) to minus 65 ± 5°F (see 4.8.3.4).

3.3.5 Volatile loss. When tested as specified in 4.8.3.5, the loss of volatile matter in the sealing compound shall be not more than 3% by weight.

3.3.6 Vertical flow. When tested as specified in 4.8.3.6, the sealing compound shall not sag more than 1/4 inch.

3.3.7 Shear cohesive strength (type I only). When tested as specified in 4.8.3.7, the time required for the aluminum strip to be withdrawn from the test fixture shall be not less than 7 seconds for type I sealing compound.

3.3.8 Torque drop, (type I only). When tested as specified in 4.8.3.8, the torque drop of type I sealing compound shall be not more than 10%.

3.3.9 Water permeability, (type I only). When tested as specified in 4.8.3.9, type I sealing compound shall not be water permeable and shall evidence no leakage of water.

3.3.10 Spreadability. When tested as specified in 4.8.3.10, the sealing compound shall spread to form a uniform layer between the runners, free of thin spots and valleys and shall shall show no evidence of failure to adhere to the plate.

3.3.11 Staining. When tested as specified in 4.8.3.11, the sealing compound shall not stain or bleed through the paint film.

3.3.12 Solubility. When tested as specified in 4.8.3.12, the sealing compound shall be soluble in kerosene or gasoline and shall wipe off easily and completely with kerosene or gasoline soaked cloth.

3.3.13 Adhesion. When tested as specified in 4.8.3.13, the sealing compound shall adhere to the aluminum strips and the aluminum strips shall show no bare spots where the sealing compound had been applied.

3.3.14 Color. When tested as specified in 4.8.3.11, the color of the sealing compound shall be of such a shade that when painted over with paint of any color, no difference in shade shall be apparent between areas coated with sealing compound and areas not so coated.

3.4 Workmanship. Workmanship shall be in accordance with good commercial practice for this type of product. The finished product shall be of uniform composition, free from foreign matter and separated liquid (see 4.8.2).

4. QUALITY ASSURANCE PROVISIONS

4.1 Responsibility for inspection. Unless otherwise specified in the contract or purchase order (see 6.2), the contractor is responsible for the performance of all inspection requirements as specified herein. Except as otherwise specified in the contract or purchase order, the contractor may use his own or any other facilities suitable for the performance of the inspection requirements specified herein, unless disapproved by the Government. The Government reserves the right to perform or witness any of the inspections set forth in the specification where such inspections are deemed necessary to assure supplies and services conform to prescribed requirements.

4.1.1 Responsibility for compliance. All items must meet all requirements of sections 3 and 5. The inspection set forth in this specification shall become a part of the contractor's overall inspection system or quality program. The absence of any inspection requirements in the specification shall not relieve the contractor of the responsibility of assuring that all products or supplies submitted to the Government for acceptance comply with all requirements of the contract. Sampling in quality conformance does not authorize submission of known defective material, either indicated or actual, nor does it commit the Government to acceptance of defective material.

4.1.2 Inspection equipment. Unless otherwise specified in the contract (see 6.2), the contractor is responsible for the provision and maintenance of all inspection equipment necessary to assure that supplies and services conform to contract requirements. Inspection equipment must be capable of repetitive measurements to an accuracy of 10% of the measurement tolerance. Calibration of inspection equipment shall be in accordance with MIL-STD-45662.

4.2 Classification of inspection:

a. First article inspection (see 4.4).
b. Quality conformance inspection (see 4.5).
   1. Tests (see 4.5.2).
c. Control tests (see 4.6).

4.3 Inspection conditions. Unless otherwise specified (see 6.2), all inspections shall be conducted under the following conditions:

a. Air temperature 73 ± 18°F
b. Barometric pressure 28.5 + 2.0 inches mercury (Hg)
- 3.0
c. Relative humidity 50 ± 30 percent

4.4 First article inspection. Unless otherwise specified (see 6.2), the Government shall select two quarts of the specified sealing compound produced under the production contract for first article inspection. First article sample shall be inspected as specified in table I. Approval of the first article sample by the Government shall not relieve the contractor of his obligation to supply sealing compounds that are fully representative of those inspected as a first article sample. Any changes or deviation of sealing compound produced during production from the first article sample shall be subjected to the approval of the contracting officer.

TABLE I. Classification of inspections.

Title	Requirement	Inspection	First article	Quality conformance Tests	Control
Materials	3.2	4.8.1	X		
Penetration	3.3.1	4.8.3.1	X	X	
Storage stability	3.3.2	4.8.3.2	X		X
Liquid separation	3.3.3	4.8.3.3	X		X
Extreme temperature resistance	3.3.4	4.8.3.4	X		X
Volatile loss	3.3.5	4.8.3.5	X		X
Vertical flow	3.3.6	4.8.3.6	X	X	
Sheer cohesive strength, type I only	3.3.7	4.8.3.7	X	X	
Torque drop, type I only	3.3.8	4.8.3.8	X	X	
Water permeability, type I only	3.3.9	4.8.3.9	X		X
Spreadability	3.3.10	4.8.3.10	X	X	
Staining	3.3.11	4.8.3.11	X		X
Solubility	3.3.12	4.8.3.12	X	X	
Adhesion	3.3.13	4.8.3.13	X	X	
Color	3.3.14	4.8.3.11	X		X
Workmanship	3.4	4.8.2	X		

4.4.1 First article inspection failure. Deficiencies found during, or as a result of, first article inspection shall be cause for rejection of the sealing compound until evidence has been provided by the contractor that corrective action has been taken to eliminate the deficiency. Any deficiency found during, or as a result of, first article inspection shall be evidence that all sealing compounds already produced prior to completion of first article inspection are similarly deficient unless contrary evidence satisfactory to the contracting officer is furnished by the contractor. Such deficiencies shall be corrected by the contractor. The Government shall not accept products until first article inspection is completed to the satisfaction of the Government.

4.5 Quality conformance inspections.

4.5.1 Sampling.

4.5.1.1 Lot formation. An inspection lot shall consist of all the sealing compound of one type, from an identifiable production period, from one manufacturer, submitted at one time for acceptance.

4.5.1.2 Sampling for tests. Samples for tests shall be selected at random and shall consist of two quarts of the specified type from a production lot.

4.5.2 Tests. Sample selected in accordance with 4.5.1.2 shall be subjected to quality conformance tests specified in table I.

4.6 Control tests. Unless otherwise specified (see 6.2), a control test sample shall be selected at random, and shall consist of two quarts of the specified type of sealing compound from a production lot which has passed the quality conformance tests in table I. The sample shall then be subjected to the control tests specified in table I.

4.7 Failure. Failure of any sample to pass any of the specified quality conformance or control tests shall be cause for the Government to refuse acceptance of the production quantity represented, until action taken by the contractor to correct defects and prevent recurrence has been approved by the Government.

4.8 Methods of inspection.

4.8.1 Materials. Conformance to 3.2 shall be determined by inspection of contractor records providing proof or certification that materials and processing conform to the requirements of this specification. Applicable records shall include specifications, receiving inspection records, processing and quality control standards, vendor catalogs and certifications, industry standards and test reports.

4.8.2 Defects. Conformance to 3.4 shall be determined by visual or tactile examination.

4.8.3 Physical property tests. All metal surfaces to which the sealing compound is to be applied shall be thoroughly cleaned prior to the performance of any test. Steel surfaces shall be prepared by sanding with No. 240 grit emery cloth. Aluminum surfaces shall be cleaned with suitable solvent to remove all oil, grease, and dirt.

4.8.3.1 Penetration. To determine conformance to 3.3.1, penetration test shall be conducted with a penetrometer containing a standard grease cone, without extra load, in accordance with the unworked penetration procedure of ASTM D217. For the purpose of this test, the sealing compound shall be packed in 3-ounce ointment cans and the penetrator applied at the center of the leveled surface of the sealer.

4.8.3.2 Storage stability. To determine conformance to 3.3.2, approximately 4 fluid ounces of the sealing compound shall be spread in a shallow vessel, nearly 6 inches in diameter (15 cm Petri dish or cover) and oven-aged for 96 hours at 158 ± 2°F. The sealing compound shall be thoroughly mixed 4 times at 2-hour intervals of 8-hour day, during the aging period. After aging, the sealing compound shall be cooled to room temperature and transferred to a 3-ounce ointment can and packed level full. The penetration value shall be determined as specified in 4.8.3.1.

4.8.3.3 Liquid separation. To determine conformance to 3.3.3, unaged sealing compound shall be packed into a 3-ounce ointment can to a level approximately 1/16 inch below the brim and then oven-aged for 96 hours at 158° ± 2°F, without stirring. After oven aging, the can and sample shall be stored at room temperature for 72 hours without stirring, tamping, or the addition of any sealing compound. The volume of any supernatant liquid shall be carefully measured to the nearest 0.1 ml.

4.8.3.4 Extreme temperature resistance. To determine conformance to 3.3.4, a film of sealing compound approximately 0.010 inch thick shall be applied to one side of clad aluminum panels, 1 by 6 by 1/32 inches. Coated panels shall be aged for 300 hours at 158 ± 2°F and then conditioned for 5 hours at minus 65 ± 5°F. While held at minus 65°F, panels shall be bent 90 degrees over a 2 1/2 inch diameter mandrel, previously cooled to minus 65°F, at a uniform rate in 3 seconds. Three coated panels shall be tested and if any failure occurs, a second group of three coated panels shall be tested. Any failure in the second group of the coated panels shall be cause for rejection.

4.8.3.5 Volatile loss. To determine conformance to 3.3.5, three 4-gram specimens of the sealing compound shall be weighed to the second decimal place in tared evaporating dishes approximately 8 centimeter (cm) in diameter, conditioned for 16 hours at 158 ± 2°F, cooled in a desiccator to room temperature and reweighed. Loss of volatile matter shall be recorded as the average of the percent weight loss of the three specimens.

4.8.3.6 Vertical flow. To determine conformance to 3.3.6, three "J" shaped steel strips conforming to those specified in 4.8.3.7.1 shall be prepared. Sealing compound shall be applied to that portion of the inner surface of the strips extending from the straight end for a distance of 5 inches and to a thickness of approximately 1/8 inch. Specimens shall then be hung from a horizontal rod support in an oven and the temperature held at 225 ± 5°F for 1 hour. Specimens shall then be examined.

4.8.3.7 Shear cohesive strength, (type I only). To determine conformance to 3.3.7, the sealing compound shall be tested as follows.

4.8.3.7.1 Apparatus. Apparatus for the test shall include two steel strips, 1 1/2 inches by 8 inches by 1/16 inch, bent at one end to form a "J" shape such that the bent ends will interlock as shown in figure 1, leaving a space of approximately 3/8 inch between the straight portions of the two plates. The apparatus shall also include one strip of aluminum, 1 inch by 3 inches by 1/32 inch, having a 1/4 inch diameter hole centered in a line 1/4 inch from one end and having a line scribed 2 inches from the other end.

4.8.3.7.2 Procedure. Sealing compound shall be spread over the inner surface of each of the steel strips, extending from the straight end for a distance of approximately 3 inches, to a thickness of about 1/4 inch. The curved ends of the steel strips shall then be interlocked and the strips pressed together until the straight portions are parallel and about 3/8 inch apart. Excess sealing compound shall be removed from the working edge and the aluminum strip inserted into the sealing compound for a distance of 2 inches, to the scribed line (see figure 1). The assembly shall be hung from a horizontal rod support. A 150-gram weight shall be suspended from the aluminum strip. The time required for the aluminum strip to be withdrawn shall be determined and recorded. The test shall be conducted three times to determine an average. Before each test, the excess sealing compound shall be cleaned from the aluminum strip, and the steel plates shall be separated and repacked.

4.8.3.8 Torque drop (type I only). To determine conformance to 3.3.8, the sealing compound shall be tested as follows.

4.8.3.8.1 Apparatus. Apparatus shall include a torque-indicating wrench of 350 foot-pound capacity, equipped with a maximum torque-indicating needle and a torque drop fixture specified in figure 2.

4.8.3.8.2 Procedure. The lower plate of the fixture shall be held in a vise and a thin layer of the sealing compound applied to the entire upper surface. The upper plate shall then be placed in a position and the bolts finger-tightened. Bolts shall be further tightened with the torque wrench, in 50 foot-pound steps, to 300 foot-pounds of applied torque. Order of tightening shall be 2-3-1-4. After 15 minutes, the torque required to cause each bolt to begin to move, in the direction of further tightening, shall be determined. With the torque wrench in place and pressure applied in the direction of impending movement, a mark shall be made upon the socket of the

wrench and upon the surface of the plate immediately below. An observer shall watch the marks, as the operator exerts a uniformly increasing pressure upon the handle of the torque wrench, and signal the operator the instant movement begins. The operator shall immediately release the pressure and read the value shown by the maximum torque-indicating needle. The following formula shall be used to determine the torque drop:

$$\text{Initial torque drop, percent} = \frac{100(300-A)}{300} = 100-(A/3)$$

Where: A = The average of the four bolt readings.

4.8.3.9 Water permeability (type I only). To determine conformance to 3.3.9, the sealing compound shall be tested as follows.

4.8.3.9.1 Apparatus. Apparatus shall include a standard 2-inch pipe flange, a 6-inch by 6-inch cast finish armor steel plate having four 5/8-11 UNC-3B tapped holes positioned to receive the flange bolts. The apparatus shall also include equipment to provide the specified head of water and to catch any leakage which may occur. The pipe flange shall be modified to receive 5/8-inch socket head cap screws, and spotfaced for screw head clearance as shown on figure 3.

4.8.3.9.2 Procedure. Sealing compound shall be applied to the entire surface of the flange side of the steel plate to a uniform thickness of 1/32 inch. Assemble the flange to the plate and tighten screws alternately in 25 foot-pound increments to 125 foot-pounds. Remove excess sealing compound from both outside and inside the flange. Install the 6-foot length of 2-inch pipe in the flange, in a manner to assure there will be no leakage at the threads. Adjust the head of water to 6 feet. Let stand 1 hour and examine flange to plate joint.

4.8.3.10 Spreadability. To determine conformance to 3.3.10, two 1/8-inch thick metal strips or runners shall be clamped to a metal plate so as to leave an area 2 inches wide by about 12 inches long between the runners. The plate shall be mounted so that the runners are in a vertical position. A 3-ounce specimen of the sealing compound, the mounted plate, and a broadnose putty knife or scraper shall be held at 10 $\pm$ 3°F, for 2 hours. While at this temperature, the sealing compound shall be spread over an area of about 4 square inches between the runners to a thickness of about 1/4 inch. The scraper shall then be placed above the spread sealing compound, with each end of the blade rinding on one of the runners and the handle tipped downward at an angle of 45 degrees. The blade shall then be moved downward across the sealing compound at a uniform speed while maintaining the blade angle and contact with both runner. The sealing compound shall then be examined.

4.8.3.11 Staining. To determine conformance to 3.3.11 and 3.3.14, a glass plate approximately 6 inches square shall be used for the test. One-half of one surface of the plate shall be covered with a smooth layer of the sealing compound about 1/16 inch in thickness. Unless otherwise specified (see 6.2), the entire surface of the plate shall be completely covered with a polyurethane coating conforming to MIL-C-46168, type optional,

or MIL-C-53039. The dry film thickness of the coating shall be not less than 1.8 mils. The color shall match the applicable color chip number (see 6.2) of FED-STD-595. The plate shall then be allowed to stand 24 hours. At the end of the 24-hour period, the painted surface shall be examined for conformance to 3.3.11 and 3.3.14. If that portion of the painted surface under which the compound has been applied shows a change in shade or color when compared with the portion under which there is no compound, the compound shall be considered as bleeding through.

4.8.3.12 Solubility. To determine conformance to 3.4.12, the steel strips used for the shear cohesive strength test specified in 4.8.3.7 with the sealing compound still applied thereon, may be used for the solubility test. Excess sealing compound shall be wiped off with a cloth or paper towel, leaving a film of the sealing compound. The strips shall then be wiped clean, one strip with a gasoline-soaked cloth and the other with a kerosene-soaked cloth. The wiping shall be a normal wiping procedure, with moderate hand pressure and the cloth used shall be cheese-cloth.

4.8.3.13 Adhesion. To determine conformance to 3.4.13, two strips of 24S clad aluminum conforming to QQ-A-250/5, each 3 by 6 inches, shall be used for the test. Unless otherwise specified (see 6.2), one strip shall be painted in accordance with MIL-STD-193, as specified herein. The strip shall be cleaned and treated in accordance with MIL-C-5541 or anodize in accordance with MIL-A-8625. Afterwards, the strip shall be primed with primer conforming to MIL-P-23377, MIL-P-53022 or MIL-P-53030 and topcoated with a polyurethane coating conforming to MIL-C- 46168, type optional, or MIL-C-53039. The color shall match the applicable color chip number (see 6.2) of FED-STD-595. Each strip shall then be smoothly coated with sealing compound on one side (the painted side of the painted strip) to a thickness of about 1/8 inch. Two 3-by 6-inch strips of cotton duck conforming to CCC-C-419, type I, No. 12, shall be applied over the sealing compound, one on each of the aluminum strips. A 10-pound roller shall then be rolled over each strip of duck, once in each direction, with no added pressure. The duck shall then be peeled from each strip in accordance with the following procedure: One end of the cotton duck shall be peeled back enough to clamp in the power-actuated jaw of a Scott testing machine or equivalent, and the end of the aluminum strip from which the duck was peeled shall be clamped in the other jaw. The cotton duck shall then be peeled from the aluminum strip with a jaw separation rate of 2 $\pm$ 1/8 inches per minute and the aluminum strip shall be examined. At least 4 inches shall be peeled back by the machine during the test.

5. PACKAGING

5.1 Preservation, packaging, packing, and marking. Preservation, packaging, packing, and marking for the desired level shall be in accordance with the applicable packaging requirements specified by the contracting authority (see 6.2).

6. NOTES

6.1 Intended use.

6.1.1 Type I. Type I sealer is intended for sealing of metal to metal flange joints.

6.1.2 Type II. Type II sealer is intended for use on military vehicles for waterproofing joints around hatches and other openings for fording operations.

6.2 Ordering data. Acquisition documents should specify the following:

a. Title, number, and date of this specification.
b. Type of sealer required (see 1.2).
c. If first article inspection is not required (see 3.1).
d. If responsibility for inspection shall be other than as specified (see 4.1).
e. If responsibility for inspection equipment shall be other than as specified (see 4.1.2).
f. If inspection conditions shall be other than as specified (see 4.3).
g. If first article sample size shall be other than as specified (see 4.4).
h. If frequency of control testing shall be other than as specified (see 4.6).
i. If the coating for the glass plate shall be other than as specified for the staining test (see 4.8.3.11).
j. Applicable color chip number (see 4.8.3.11).
k. If painting of the aluminum strip shall be other than as specified for the adhesion test (see 4.8.3.13).
l. Selection of applicable level and packaging requirements (see 5.1).

6.3 Definitions.

6.3.1 Recovered materials. "Recovered materials" means materials that have been collected or recovered from solid waste (see 6.3.2).

6.3.2 Solid waste. "Solid waste" means (a) any garbage, refuse, or sludge from a waste treatment plant, water supply treatment plant, or air pollution control facility; and (b) other discarded material, including solid, liquid, semisolid, or contained gaseous material resulting from industrial, commercial, mining, and agricultural operations, and from community activities. It does not include solid or dissolved material in domestic sewage, or solid or dissolved material in irrigation return flows or industrial discharges which are point sources subject to permits under section 402 of the Clean Water Act, (33 U.S.C. 1342 et seq.), or source, special nuclear, or byproduct material as defined by the Atomic Energy Act of 1954 (42 U.S.C. 2011 et seq.) (Source: Federal Acquisition Regulations, section 23.402).

6.4 Subject term (key word) listing.

Compound, sealing, non-curing, polybutene.
Non-curing, sealing compound, polybutene.
Polybutene sealing compound, non-curing.

6.5 Changes from previous issue. Asterisks (or vertical lines) are not used in this revision to identify changes with respect to the previous issue due to the extensiveness of the changes.

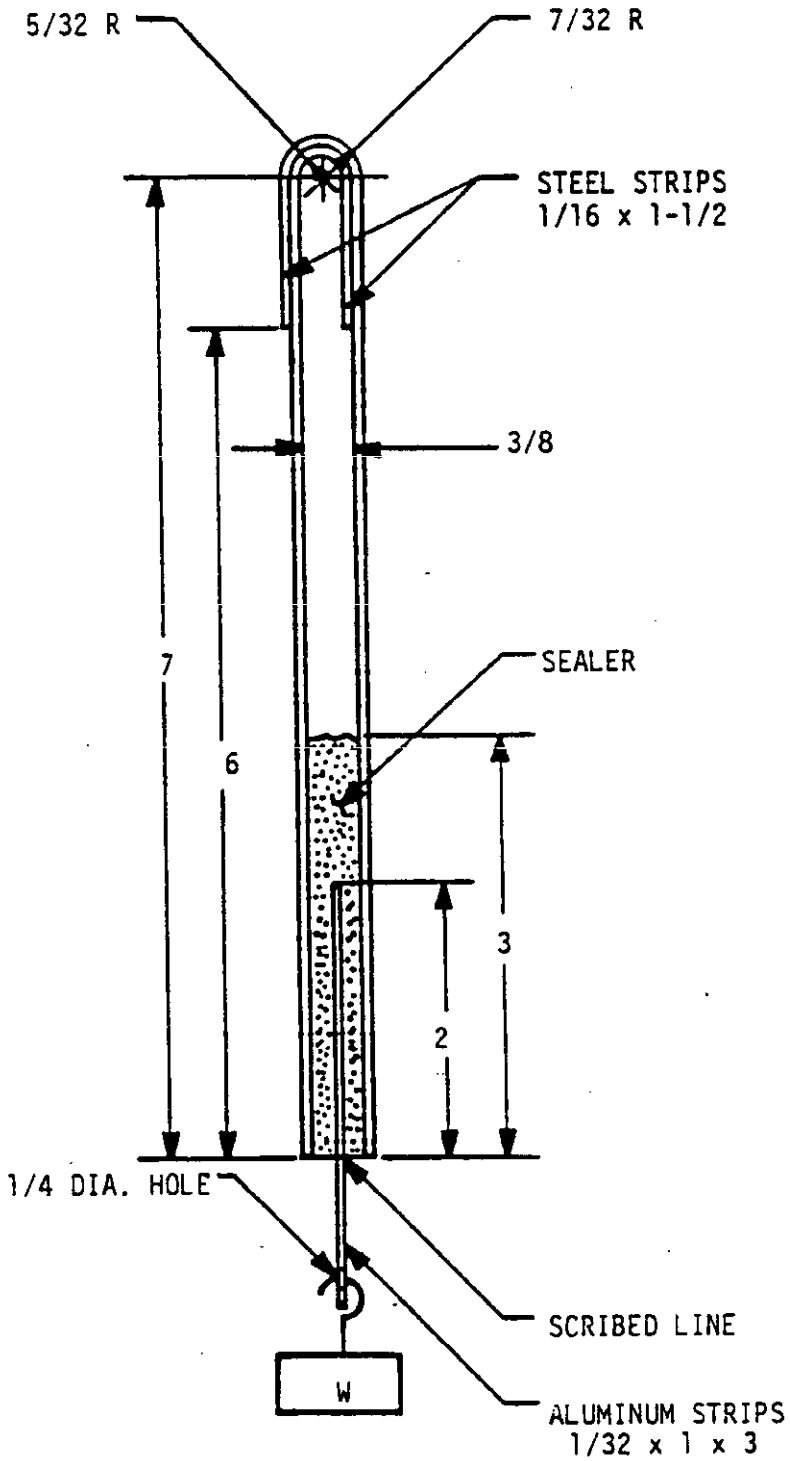

NOTE:
1. Dimensions are in inches.

FIGURE 1. Cohesive strength fixture.

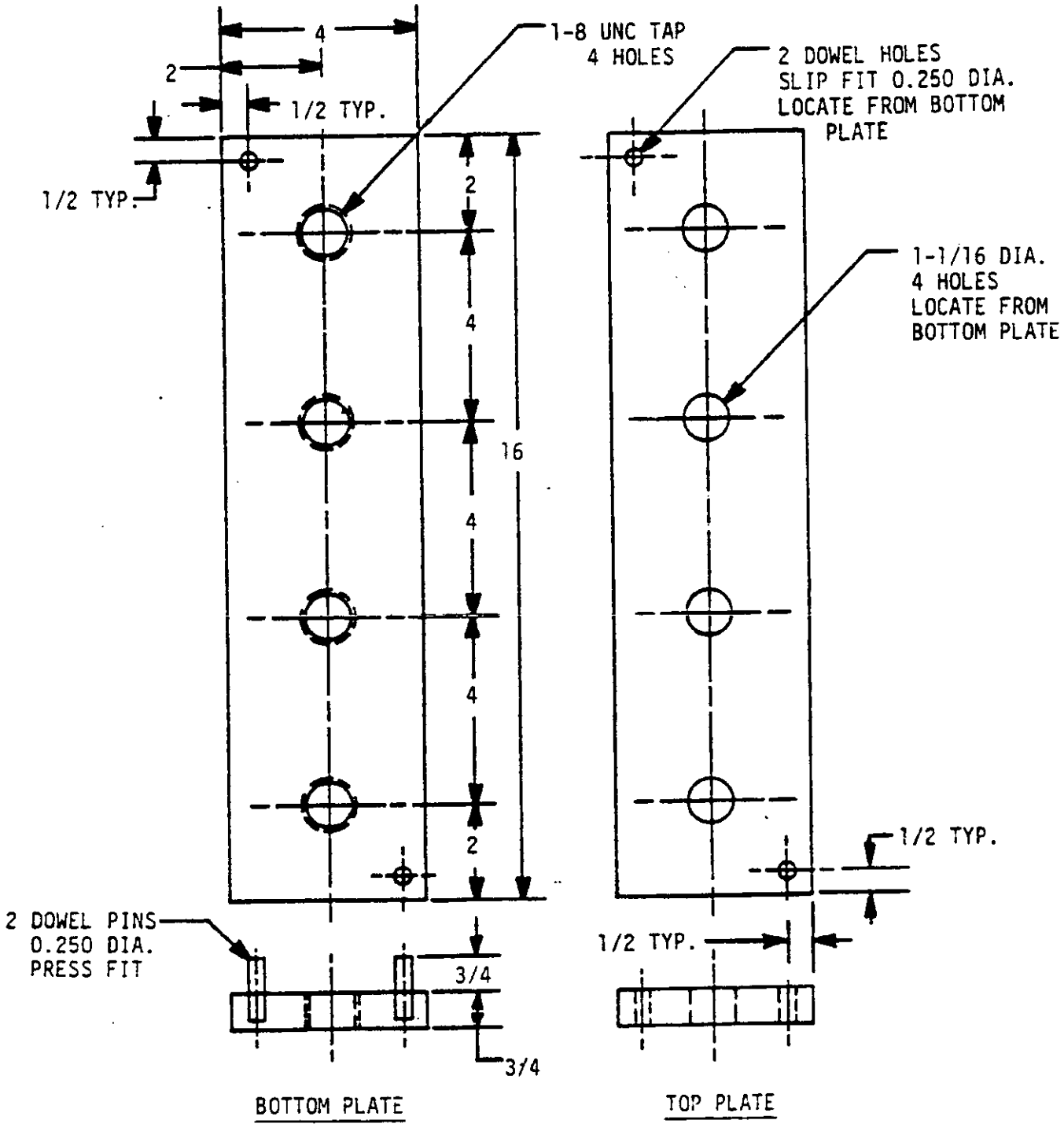

NOTE:
1. Dimensions are in inches.

FIGURE 2. Torque drop fixture.

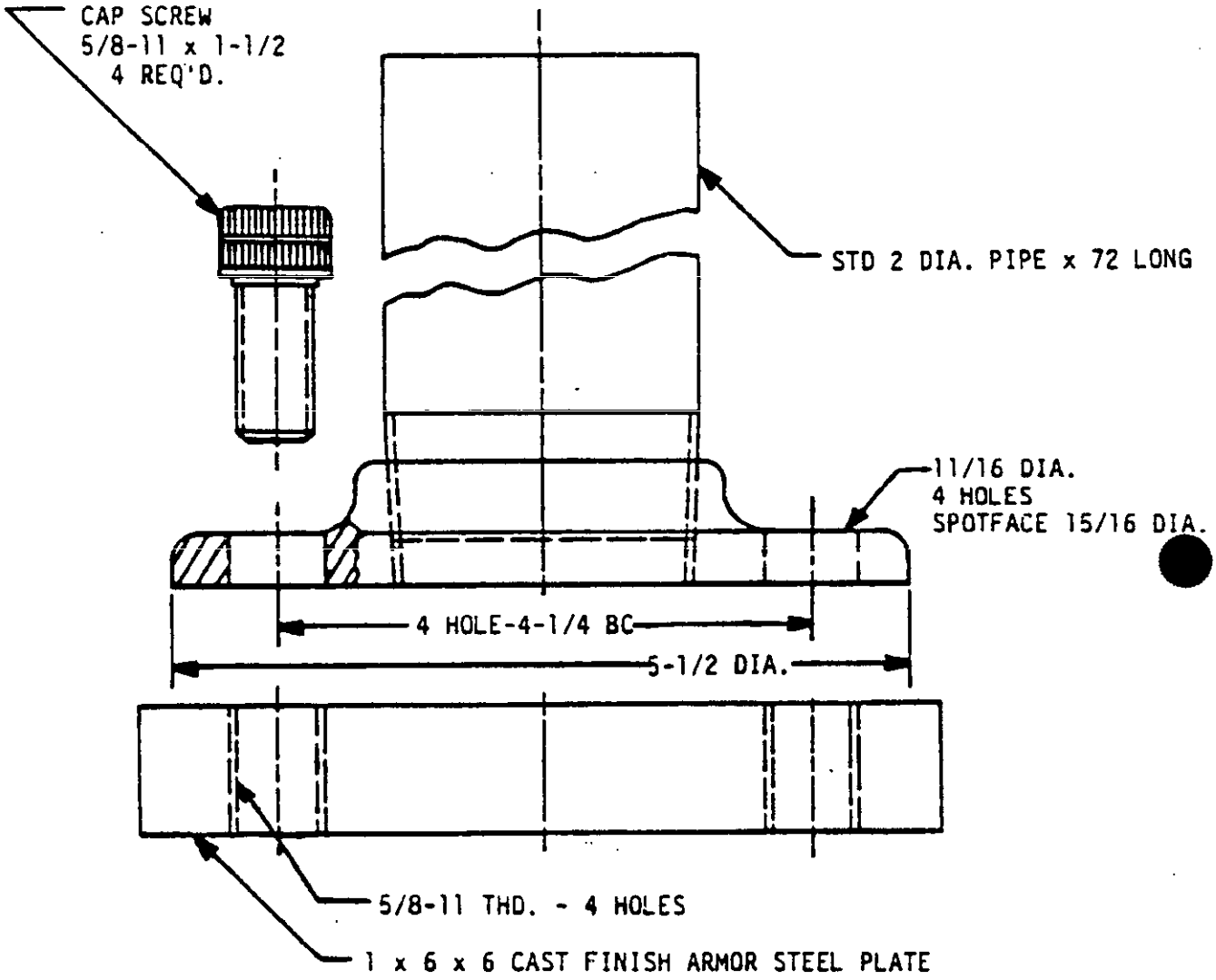

NOTE:
1. Dimensions are in inches.

FIGURE 3. Water permeability test fixture.

Custodian:
Army - AT

Review activities:
Army - SM, ME, MR, AR

Preparing activity:
Army - AT

(Project 8030-A117)

STANDARDIZATION DOCUMENT IMPROVEMENT PROPOSAL

INSTRUCTIONS This form is provided to solicit beneficial comments which may improve this document and enhance its use. DoD contractors, government activities, manufacturers, vendors, or other prospective users of the document are invited to submit comments to the government. Fold on lines on reverse side, staple in corner, and send to preparing activity. Attach any pertinent data which may be of use in improving this document. If there are additional papers, attach to form and place both in an envelope addressed to preparing activity. A response will be provided to the submitter, when name and address is provided, within 30 days indicating that the 1426 was received and when any appropriate action on it will be completed.

NOTE: This form shall not be used to submit requests for waivers, deviations or clarification of specification requirements on current contracts. Comments submitted on this form do not constitute or imply authorization to waive any portion of the referenced document(s) or to amend contractual requirements. FSC 8030

DOCUMENT IDENTIFIER (Number) AND TITLE Revision D to MIL-S-12158(AT); Sealing Compound, Non-Curing, Polybutene

NAME OF ORGANIZATION AND ADDRESS OF SUBMITTER

☐ VENDOR ☐ USER ☐ MANUFACTURER

1 ☐ HAS ANY PART OF THE DOCUMENT CREATED PROBLEMS OR REQUIRED INTERPRETATION IN PROCUREMENT USE? ☐ IS ANY PART OF IT TOO RIGID, RESTRICTIVE, LOOSE OR AMBIGUOUS? PLEASE EXPLAIN BELOW.

A. GIVE PARAGRAPH NUMBER AND WORDING

B. RECOMMENDED WORDING CHANGE

C. REASON FOR RECOMMENDED CHANGE(S)

2 REMARKS

SUBMITTED BY (Printed or typed name and address — Optional)

TELEPHONE NO.

DATE

DD FORM 1 OCT 76 1426 EDITION OF 1 JAN 72 WILL BE USED UNTIL EXHAUSTED.