Downloaded from http://www.everyspec.com

MILITARY SPECIFICATION

STUDS, BOLTS, HEX CAP SCREWS, AND NUTS

This limited coordination Military Specification has been prepared by the Naval Ship Engineering Center based upon currently available technical information and is approved for use by the Naval Sea Systems Command and is available for use by all Departments and Agencies of the Department of Defense. It has not been approved for promulgation as a coordinated revision of Military Specification MIL-S-1222P. It is subject to modification. However, pending its promulgation as a coordinated Military Specification, it may be used in procurement.

1. SCOPE.

1.1 Scope. The specification covers standard studs, bolts, hex cap screws, and nuts in sizes 1/4 inch and over for general, high temperature, and sea-water services.

1.2 Classification. Fasteners shall be of the following types and styles, as specified (see 6.2):

TYPES

Studs

Type I - Full body
Type II - Reduced body
Type III - Constant strength body

	Tap end thread	Nut end thread
Style a	NC 5	UNC 3
Style b	NC 5	UNC 2
Style c	UNC 3	UNC 3
Style d	UNC 3	UNC 2

Type IV - Continuous thread

Bolts

Type I - Hex bolt
Type II - Heavy hex bolt
Type III - Heavy hex structural bolt.

Screws

Type I - Hex cap screw
(finished hex bolt)

Nuts

Type I - Hex nut
Type II - Hex jam nut
Type III - Heavy hex nut
Type IV - Heavy hex jam nut
Style a - Washer faced
Style b - Double chamfered

2. APPLICABLE DOCUMENTS

2.1 The following documents, of the issue in effect on date of invitation for bids or request for proposal, form a part of the specification to the extent specified herein.

SPECIFICATIONS

FEDERAL

QQ-A-225/6 - Aluminum Alloy Bar, Rod, and Wire; Rolled, Drawn, or Cold Finished, 2024.

Downloaded from http://www.everyspec.com

FEDERAL (con.)

QQ-A-225/8 - Aluminum Alloy Bar, Rod, and Wire, and Special Shapes; Rolled, Drawn, and Cold Finished, 6061.
QQ-B-637 - Brass, Naval: Rod, Wire, Shapes, Forgings and Flat Products With Finished Edges (Bar, Flat Wire and Strip).
QQ-B-728 - Bronze, Manganese; Rod, Shapes, Forgings, and Flat Products (Flat Wire, Strip, Sheet, Bar, and Plate).
QQ-B-750 - Bronze, Phosphor; Bar, Plate, Rod, Sheet, Strip, Flat Wire, and Structural and Special Shaped Sections.
QQ-C-591 - Copper-Silicon, Copper-Zinc-Silicon, and Copper-Nickel-Silicon Alloys: Rod, Wire Shapes, Forgings, and Flat Products, (Flat Wire, Strip, Sheet, Bar, and Plate).
QQ-N-281 - Nickel-Copper Alloy Bar, Plate, Rod, Sheet, Strip, Wire, Forgings, and Structural and Special Shaped Sections.
QQ-N-286 - Nickel-Copper-Aluminum Alloy, Wrought.
QQ-P-416 - Plating, Cadmium (Electrodeposited).
QQ-Z-325 - Zinc Coating, Electrodeposited, Requirements for.
PPP-H-1581 - Hardware (Fasteners and Related Items), Packaging and Packing for Shipment and Storage of.

MILITARY

MIL-T-9047 - Titanium and Titanium Alloy Bars, Forgings, and Forging Stock.
MIL-B-24059 - Bronze, Nickel Aluminum; Rod, Flat Products with Finished Edges, Shapes and Forgings.
MIL-H-81200 - Heat Treatment of Titanium and Titanium Alloys.

STANDARDS

FEDERAL

FED-STD-66 - Steel: Chemical Composition and Hardenability.
FED-STD-151 - Metals, Test Methods.

MILITARY

MIL-STD-105 - Sampling Procedures and Tables for Inspection by Attributes
MIL-STD-109 - Quality Assurance Terms and Definitions.
MIL-STD-271 - Nondestructive Testing Requirements for Metals.

(Copies of specifications, standards, drawings, and publications required by suppliers in connection with specific procurement functions should be obtained from the procuring activity or as directed by the contracting officer.)

2.2 Other publications. The following documents form a part of this specification to the extent specified herein. Unless otherwise indicated, the issue in effect on date of invitation for bids or request for proposal shall apply.

AMERICAN SOCIETY FOR TESTING AND MATERIALS (ASTM)

A 153 - Zinc Coating (Hot-Dip) on Iron and Steel Hardware, Spec. for.
A 193 - Alloy-Steel and Stainless Steel Bolting Materials for High-Temperature Service, Spec. for.
A 194 - Carbon and Alloy Steel Nuts for Bolts for High-Pressure and High-Temperature Service, Spec. for.
A 370 - Mechanical Testing of Steel Products, Methods and Definitions for.
A 380 - Cleaning and Descaling Stainless Steel Parts, Equipment, and Systems, Rec. Practice for.
E 8 - Tension Testing of Metallic Materials.
E 18 - Rockwell Hardness and Rockwell Superficial Hardness of Metallic Materials, Tests for.
E 29 - Indicating Which Places of Figures Are to be Considered Significant in Specified Limiting Values, Rec. Practice for.

(Application for copies should be addressed to the American Society for Testing and Materials, 1916 Race Street, Philadelphia, PA 19103.)

Downloaded from http://www.everyspec.com

AMERICAN NATIONAL STANDARDS INSTITUTE (ANSI)
B1.1 - Unified Screw Threads.
B1.2 - Gages and Gaging for Unified Screw Threads.
B18.2.1 - Square and Hex Bolts and Screws, Including Askew Head Bolts, Hex Cap Screws, and Lag Screws.
B18.2.2 - Square and Hex Nuts.
B18.12 - Mechanical Fasteners, Glossary of Terms for.

(Application for copies should be addressed to the American National Standards Institute, 1430 Broadway, New York, N.Y. 10014.)

SOCIETY OF AUTOMOTIVE ENGINEERS (SAE)
J 121 - Decarburization in Hardened and Tempered Threaded Fasteners.
J 122 - Surface Discontinuities on Nuts.
J 123a - Surface Discontinuities on Bolts, Screws and Studs.

(Application for copies should be addressed to the Society of Automotive Engineers, 2 Pennsylvania Plaza, New York, N.Y. 10001.)

(Technical society and technical association specifications and standards are generally available for reference from libraries. They are also distributed among technical groups and using Federal agencies.)

3. REQUIREMENTS

3.1 Material. Fasteners shall be of carbon or alloy steel, corrosion resistant steel, or non-ferrous alloys in accordance with table I.

Table I. Chemical composition requirements.[1]

Material	Material grade[2]	Material Specification
Carbon Steel	1, 2, 5, 8, 2H	FED-STD-66, any AISI - 10XX series with C = 0.55 max
Alloy Steel	4	ASTM A 194[3]
Alloy Steel	B7, B16	ASTM A 193[3]
Corrosion Resistant Steel	303, 304, 305, 316, 321, 347, 384, 410, 416	FED-STD-66
Aluminum alloy	2024-T6, 6061-T6	QQ-A-225/6, QQ-A-225/8
Naval Brass	462, 464, 482	QQ-B-637
Phosphor-bronze	510, 544	QQ-B-750, Composition A, B
Nickel-aluminum-bronze	632	MIL-B-24059
Silicon-bronze	651, 655, 661	QQ-C-591
Manganese-bronze	675, 670	QQ-B-728, class A, B
Nickel-copper	400, 405	QQ-N-281, class A, B
Nickel-copper-aluminum	500	QQ-N-286, class A
Titanium alloy	T7	MIL-T-9047, Composition 7

[1] Unless specifically prohibited (see 6.2), the following groups of material are considered equivalent and interchangeable, and the choice of one alloy within a group shall be at the discretion of the manufacturer:

Group 1 - Grades 303, 304, 305, 384
Group 2 - Grades 321, 347
Group 3 - Grades 410, 416
Group 4 - Grades 462, 464, 482
Group 5 - Grades 510, 544
Group 6 - Grades 655, 661
Group 7 - Grades 675, 670
Group 8 - Grades 400, 405

See remainder of footnotes on next page.

Downloaded from http://www.everyspec.com

2/ Grade B7 externally threaded fasteners are to be used with grade 2H or grade 4 nuts, and grade B16 externally threaded fasteners are to be used with grade 4 nuts.

3/ AISI 4140, 4142, or 4145, in accordance with FED-STD-66, and the grades 4 and B7 herein, are considered equivalent and interchangeable. Also, AISI 4340 is an acceptable substitute for B16. The lower limit of silicon, for the AISI and ASTM materials listed herein, shall be 0.15 percent.

3.2 Mechanical properties. The mechanical properties of fastness shall meet the requirements of tables II or III, as applicable. For corrosion resistant steels and titanium alloy, the mechanical properties shall be in accordance with the specific heat treatment or condition specified (see 6.2).

Table II. Mechanical property requirements for externally threaded fasteners.

	Grade	Heat treatment or condition 1/	Nominal Diameter (Inch)	Full-Size fasteners				Machined specimens from Fasteners or on parent stock 2/			
				Tensile strength ksi	Yield strength ksi min	Proof stress ksi min	Rockwell hardness	Tensile strength ksi min	Yield strength ksi min	Elongation in 4D percent min	Reduction of area percent min
Carbon and alloy steels	1	----	1/4 and over	60-100	------	------	B70 min	60	------	------	------
	2	----	1/4 to 3/4	75-100	------	55	B80 min	75	55	18	35
			over 3/4	60-100	------	35	B70 min	60	35	18	35
	5	Hardened & tempered	1/4 to 1	120-150	------	85	C23 - 34	120	90	14	35
			over 1 to 1 1/2	105-150	------	75	C19 - 32	105	80	14	35
			over 1 1/2	90-150	------	55	B90 min	90	90	14	35
	8	Hardened & tempered	1/4 to 2 1/2	150-170	------	120	C32 - 38	150	130	14	35
			over 2 1/2	140-170	------	105	C25 - 38	140	115	14	35
	B7	Hardened & tempered	1/4 to 2 1/2	125-150	------	95	C25 - 34	125	105	16	50
			over 2 1/2	115-150	------	85	C22 - 34	115	95	16	50
	B16	Hardened & tempered	1/4 to 2 1/2	125-150	------	95	C25 - 34	125	105	18	50
			over 2 1/2	115-150	------	85	C22 - 34	115	95	17	45
Corrosion resistant steels	303, 304 305, 316, 321, 347, 384,	Annealed	1/4 and over	75-100	30	------	------	75	30	20	------
		Strain hardened	1/4 to 3/4	105-140	65	------	------	105	65	20	------
			over 3/4	90-140	50	------	------	85	40	25	------
	410, 416	T	1/4 and over	125-150	95	------	C22 - 34	125	95	20	------
		H	1/4 and over	180-220	135	------	C34 - 42	180	135	12	------

See footnotes at bottom of next page:

Downloaded from http://www.everyspec.com

Table II. Mechanical property requirements for externally threaded fasteners (con.).

	Grade	Heat treatment or condition 1/	Nominal Diameter (Inch)	Full-Size fasteners				Machined specimens from Fasteners or on parent stock 2/			
				Tensile strength ksi	Yield strength ksi min	Proof stress ksi min	Rockwell hardness	Tensile strength ksi min	Yield strength ksi min	Elongation in 4D percent min	Reduction of area percent min
Alum. alloys	2024	T4	1/4 and over	62 min.	40	------	------	62	40	10	------
	6061	T6	1/4 and over	42 min.	35	------	------	42	35	10	------
Copper alloys	462, 464, 482	----	1/4 and over	55-90	25	------	------	55	20	25	------
	510, 544	----	1/4 and over	60-90	35	------	------	60	35	15	------
	632	----	1/4 and over	90-120	35	------	------	90	35	18	------
	651	----	1/4 and over	70-100	40	------	------	65	35	15	------
	655, 661	----	1/4 and over	65-100	35	------	------	65	35	15	------
	675	----	1/4 and over	55-90	20	------	------	55	20	20	------
Nickel alloys	400, 405	----	1/4 and over	80-110	40	------	B80 min	80	40	20	------
	500	Annealed and age hardened	1/4 to 1	130-180	90	------	C24 min	130	90	20	------
			over 1	130-180	85	------	C24 min	130	85	20	------
Titanium alloy	T7	Annealed	1/4 to 1-1/2	125 min	115 min	------	------	125	115	12	20
			over 1-1/2 to 2	120 min	110 min	------	------	120	110	12	20
			over 2	115 min	105 min	------	------	115	105	12	20
		Solution treated and aged	1/4 to 1	145 min	135	------	------	145	135	12	20
			over 1	135 min	125	------	------	135	125	12	20

1/ See 3.2.1.

2/ See 4.4.4 and 4.4.5.

Downloaded from http://www.everyspec.com

Downloaded from http://www.everyspec.com

Table III. Mechanical property requirements for nuts.

	Grade	Heat[1/] treatment or condition	Nominal size (Inch)	Proof stress for nuts, ksi min			Rockwell Hardness
				Type I	Types II and IV	Type III	
Carbon and alloy steels	2H	------	1/4 and over	135	80	150	C22 - 34
	4	Hardened and tempered	1/4 and over	150	90	170	C24 - 38
	5	Hardened and tempered	1/4 to 1	120	170	135	C23 - 34
			over 1	105	60	120	C19 - 32
	8	Hardened and tempered	1/4 and over	150	90	170	C25 - 38
Corrosion Resistant steels	303, 304, 305, 316, 321, 347, 384	Annealed	1/4 and over	75	45	85	--------
		Strain Hardened	1/4 and over	90	55	100	--------
	410, 416	T	1/4 and over	125	75	140	C22 - 34
		H	1/4 and over	180	110	200	C34 - 42
alum. alloys	2024	T4	1/4 and over	55	35	60	--------
	6061	T6	1/4 and over	40	30	45	--------
Copper alloys	462, 464, 482	------	1/4 and over	55	35	60	--------
	510, 544	------	1/4 and over	60	35	70	--------
	632	------	1/4 and over	90	55	100	--------
	651, 655, 661	------	1/4 and over	65	40	75	--------
	675	------	1/4 and over	55	35	60	--------
Nickel alloys	400, 405	------	1/4 and over	80	50	90	B80 min
	500	Annealed and age hardened	1/4 and over	130	80	145	C24 min
Titanium alloy	T7	Annealed	1/4 and over	120	70	135	--------
		Solution treated and aged	1/4 and over	140	80	155	--------

1/ See 3.2.1

Downloaded from http://www.everyspec.com

3.2.1 Heat treatment. When required (see tables II and III), fasteners shall be heat treated to meet the specified mechanical properties. Heat treating procedures shall be in accordance with the applicable material specification. For steel under FED-STD-66, heat treatment shall be in accordance with AISI recommended practices for the applicable material. In addition, 3.2.1.1 through 3.2.1.7 are applicable.

3.2.1.1 Carbon and alloy steel. The minimum tempering temperature after hardening shall be:

Material	Tempering temperature (min)
Grade 5 and 8	800° Fahrenheit (°F)
Grade 2H	850°F
Grade 4 and B7	1100°F
Grade B16	1200°F

3.2.1.2 Austenitic corrosion resistant steel. Grades 304, 305, 316, 321, 347, and 384 fasteners ordered in the annealed condition shall be solution annealed at 1950°F ± 50°F for one hour for each inch of material thickness, but shall be not less than one hour, and then water quenched.

3.2.1.3 Martensitic corrsion resistant steel. Grades 410 and 416 fasteners shall be hardened and tempered. The recommended procedure is as follows:

(a) Grades 410T and 416T. Hold at 1830°F ± 50°F for at least one-half hour and then oil quenched. Then tempered at 1000°F minimum for at least three hours and then air cooled.

(b) Grades 410H and 416H. Hold at 1830°F ± 50°F for at least one-half hour and then oil quenched. Then tempered at 525°F minimum for at least three hours and then air cooled.

3.2.1.4 Cleaning and descaling. Corrosion resistant steel fasteners which have been heat treated shall be cleaned and descaled in accordance with ASTM A 380.

3.2.1.5 Copper alloy. Copper alloy fasteners which have been cold worked shall be stress relieved at a minimum temperature of 600°F for one hour per inch of diameter or thickness.

3.2.1.6 Nickel-copper-aluminum. Grade 500 fasteners shall be annealed and age hardened. The bar stock used shall be cold drawn and annealed, or hot rolled and annealed. Externally threaded fasteners cut or roll-threaded from annealed bar stock shall be age hardened. Externally threaded fasteners manufactured from annealed and age hardened bar stock shall have threads (and heads) formed by cutting. Heat treating procedure shall be in accordance with QQ-N-286.

3.2.1.7 Titanium alloy. Grade T7 fasteners shall be annealed or solution treated in accordance with MIL-H-81200.

3.2.2 Loading stress calculation. To determine the required load, (F) in pounds, for full size fasteners, the following formula shall be used:

$$F \text{ (in pounds)} = P \times A_{(s)}$$

Where P = Minimum proof yield or tensile stress, as applicable, of the fastener in pounds per square inch (lb/in^2)

$$A_{(s)} = 0.7854 \left(D - \frac{0.9743}{n}\right)^2$$

Where $A_{(s)}$ = Stress area of the fastener
D = Nominal diameter or size of fastener
n = number of threads per inch

NOTE: The $A_{(s)}$ values of commonly used fasteners are contained in table IV.

Downloaded from http://www.everyspec.com

Table IV - Stress areas of externally threaded fasteners and nuts

Nominal Diameter inch	Coarse thread series UNC		Fine thread series UNF		8-Thread series 8UN	
	Threads per inch	Stress area $A_{(s)}$	Threads per inch	Stress area $A_{(s)}$	Threads per inch	Stress area $A_{(s)}$
1/4	20	0.0313	28	0.0364		
5/16	18	0.0524	24	0.0560		
3/8	16	0.0775	24	0.0878		
7/16	14	0.1063	20	0.1187		
1/2	13	0.1419	20	0.1599		
9/16	12	0.182	18	0.203		
5/8	11	0.226	18	0.256		
3/4	10	0.334	16	0.373		
7/8	9	0.462	14	0.509	----	-----
1	8	0.606	12	0.663	8	0.606
1-1/8	7	0.763	12	0.856	8	0.790
1-1/4	7	0.969	12	1.073	8	1.000
1-3/8	6	1.155	12	1.315	8	1.233
1-1/2	6	1.405	12	1.581	8	1.492
1-5/8	-----	------	--	------	8	1.78
1-3/4	5	1.90	--	------	8	2.08
1-7/8	-----	------	--	------	8	2.41
2	4-1/2	2.50	--	------	8	2.77
2-1/4	4-1/2	3.25	--	------	8	3.56
2-1/2	4	4.00	--	------	8	4.44
2-3/4	4	4.93	--	------	8	5.43
3	4	5.97	--	------	8	6.51
3-1/4	4	7.10	--	------	8	7.69
3-1/2	4	8.33	--	------	8	8.96
3-3/4	4	9.66	--	------	8	10.34
4	4	11.08	--	------	8	11.81

3.2.3 Decarburization. Decarburization of the threaded portion of carbon and alloy steel bolt, cap screw or stud in grades 5, 8, B7, and B16 shall meet the requirements of SAE J121, class B.

Downloaded from http://www.everyspec.com

3.3 Protective coatings.

3.3.1 Plating. When protective plating is specified (see 6.2), carbon and alloy steel fasteners in grades 1, 2, 5, and 8 shall be cadmium or zinc plated in accordance with the following:

Cadmium plating: QQ-P-416, type II, class 2
Zinc plating: QQ-Z-325, type II, class 2
Hot dip zinc plating: ASTM A 153, class 3

3.3.1.1 Hot-dip zinc plate shall not be applied to grade 8 fasteners and to other steel fasteners less than 1/2 inch nominal size. When the hot-dip process is used, a supplemented chromate treatment in accordance with type II of QQ-Z-325 is required.

3.3.1.2 Hot-dip zinc plated externally threaded fasteners may have the threads re-rolled, but shall not be recut. Nuts shall be threaded after plating.

3.3.2 Passivation. Corrosion resistant steel fasteners shall be passivated in accordance with ASTM A 380.

3.4 Dimensions.

3.4.1 Thread series and tolerances. The limiting thread dimensions and tolerances shall conform to ANSI B1.1. Terminologies shall be in accordance with ANSI B18.12. Gauges and gauging shall be in accordance with ANSI B1.2. Unless otherwise specified, threads for fasteners of all materials and sizes shall be unified coarse thread series for sizes 1/4 inch through 1 inch, and unified 8 pitch series for sizes over 1 inch. Threads with radiused root in the UNR (UNRC and 8 UNR) series are acceptable in lieu of unified thread series. Except for tap end studs which have different fit tolerances according to the style, and unless otherwise specified (see 6.2), fit tolerances shall be class 2A/2B.

3.4.2 Bolts and cap screws. Dimensions of bolts and cap screws shall conform to ANSI B18.2.1.

3.4.3 Nuts. Dimension of nuts shall conform to ANSI B18.2.2.

3.4.3.1 Overtapping of nuts. Hot-dip zinc plated nuts shall be tapped after plating, and shall be tapped oversize by the following minimum diametral amount:

Sizes 1/2 to 1 inch ---- 0.015 inch
Sizes over 1 inch ---- 0.020 inch

3.4.4 Studs.

3.4.4.1 Tap end studs, types I, II, and III. Body dimensions shall be in accordance with table V. Thread length and other pertinent dimensions shall be in accordance with table VI.

Table V - Body diameter - studs, types I, II, and III; styles a, b, c, and d.

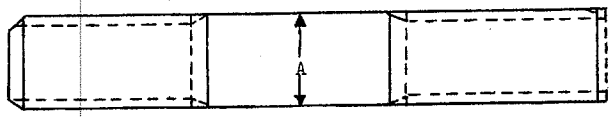

Size	Body diameter (inches) (A)												Nut end thread
	Full body				Reduced body				Constant strength body				
	Type I Styles a & c		Type I Styles b & d		Type II Styles a & c		Type II Styles b & d		Type III Styles a & c		Type III Styles b & d		
	max	min	max	min	max	min	max	min	max	min	max	min	
1/4	0.270	0.241	0.270	0.240	0.250	0.214	0.248	0.212	0.218	0.189	0.216	0.188	UNC
5/16	.332	.303	.332	.302	.312	.273	.311	.271	.276	.244	.275	.243	UNC
3/8	.395	.365	.395	.364	.375	.331	.373	.328	.334	.298	.333	.297	UNC
7/16	.457	.427	.457	.425	.437	.387	.436	.385	.391	.350	.390	.348	UNC
1/2	.520	.489	.520	.487	.500	.446	.498	.443	.450	.406	.448	.404	UNC
9/16	.582	.551	.582	.549	.562	.504	.560	.501	.508	.460	.507	.459	UNC
5/8	.645	.612	.645	.611	.625	.561	.623	.558	.566	.514	.564	.512	UNC
3/4	.770	.737	.770	.735	.750	.680	.748	.677	.685	.627	.683	.626	UNC
7/8	.895	.861	.895	.859	.875	.798	.873	.794	.803	.739	.801	.737	UNC
1	1.020	.985	1.020	.983	1.000	.913	.998	.910	.919	.847	.917	.845	UNC
1-1/8	1.145	1.108	1.145	1.106	1.125	1.026	1.122	1.022	1.032	.950	1.030	.948	UNC
1-1/8	1.145	1.110	1.145	1.108	1.125	1.039	1.122	1.035	1.044	.972	1.042	.970	8UN
1-1/4	1.270	1.233	1.270	1.231	1.250	1.151	1.247	1.147	1.157	1.075	1.155	1.072	UNC
1-1/4	1.270	1.235	1.270	1.233	1.250	1.164	1.247	1.160	1.169	1.097	1.167	1.094	8UN
1-3/8	1.295	1.356	1.295	1.354	1.375	1.260	1.372	1.256	1.267	1.170	1.264	1.168	UNC
1-3/8	1.295	1.360	1.295	1.358	1.375	1.288	1.372	1.284	1.294	1.222	1.292	1.219	8UN
1-1/2	1.520	1.481	1.520	1.479	1.500	1.385	1.497	1.381	1.392	1.296	1.389	1.293	UNC
1-1/2	1.520	1.485	1.520	1.483	1.500	1.413	1.497	1.409	1.419	1.347	1.417	1.344	8UN

Downloaded from http://www.everyspec.com

Downloaded from http://www.everyspec.com

Table VI - Thread length dimensions for studs, types I, II, and III, styles a, b, c, and d.

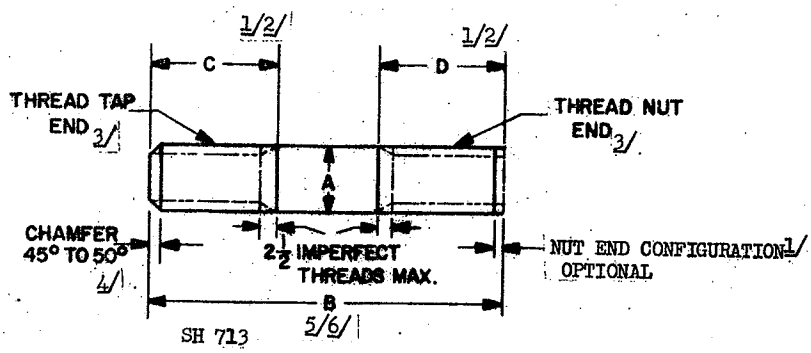

Nominal size			Minimum thread length - (inches)		
	T.p.i.		Nut end (D)		
inch	Coarse thread series	Fine thread series	Up to 6 inches long (B)	Over 6 inches long (B)	Tap end (C)
1/4	20	28	0.750	1.000	0.375
5/16	18	24	.875	1.125	.469
3/8	16	24	1.000	1.250	.562
7/16	14	20	1.125	1.375	.656
1/2	13	20	1.250	1.500	.750
9/16	12	18	1.375	1.625	.844
5/8	11	18	1.500	1.750	.937
3/4	10	16	1.750	2.000	1.125
7/8	9	14	2.000	2.250	1.312
1	8	12	2.250	2.500	1.500
1-1/8	7	12	2.500	2.750	1.687
1-1/4	7	12	2.750	3.000	1.875
1-1/2	6	12	3.250	3.500	2.500

1/ When studs are too short to be threaded as specified, the threading shall be of equal length from each end to the center and the ends shall be rounded or chamfered.

2/ The maximum thread length shall be specified minimum length plus 3/16 inch or 2-1/2 threads, whichever is greater.

3/ Thread taper variations shall fall within the applicable pitch diameter tolerances.

4/ The tap ends of studs shall be chamfered 45 to 50 degrees from a point 1/64 to 1/32 inch below the root diameter of the thread. The shape of the nut end is optional except as specified in 1/ but shall fall within the same dimensional envelope as the tap end.

See remaining footnotes on next page.

Downloaded from http://www.everyspec.com

5/ Straightness. When rolled on a flat surface, the clearance as BT/5D measured by a feeler gage shall not exceed the value where B is the nominal length, D the nominal diameter and T is the pitch diameter tolerance of the nut end thread.

6/ The length tolerance shall be as follows:

Stud length (B)	Tolerance for nominal stud diameter			
	1/4 to 3/8	7/16 to 1/2	5/8 to 1-1/4	over 1-1/4
up to 6 inch	± 1/32	± 1/16	± 1/8	± 1/4
over 6 inch	± 1/16	± 3/32	± 3/16	± 1/4

3.4.4.1.1 Body diameters. The body diameters of types I, II, and III studs are defined as follows:

(a) Full body - The body diameter (A) is not less than the minimum major diameter of the thread of the nut end nor more than the nominal (basic) size plus 0.020 inch.

(b) Reduced body - The body diameter (A) is not less than the minimum pitch diameter nor more than the maximum major diameter of the nut end thread.

(c) Constant strength body - The body diameter (A) is not less than the minor diameter of the nut end thread nor more than the maximum pitch diameter of the nut end thread.

3.4.4.2 Continuous thread studs. Size and length shall be as specified (see 6.2). Tolerances for length, chamfer, and straightness shall be the same as for tap end studs as in table VI.

3.5 Identification marking.

3.5.1 Material identification. Each fastener 1/2 inch size and over, (grade 1 and grade 2 excluded) shall be marked to identify the material. Marking shall be of permanent type and may be raised or depressed. Stamping shall be made with low stress (round radius) die stamps. Marking shall be applied to the head of bolts and hex cap screws, the nut end of tap end studs, either end of continuous thread studs and the top face, (not washer face) of nuts. Identification symbols shall be in accordance with table VII.

Downloaded from http://www.everyspec.com

Table VII. Material identification markings.

Grade[1]	Condition	Marking symbol	Acceptable alternate symbol	
			Bolt, screw, stud	Nut
2H	Heat treated	2H (nuts only)		
4	Heat treated	4 (nuts only)		
B7	Heat treated	B7 (bolt, screw, stud)		
B16	Heat treated	B16 (bolt, screw, stud)		
5	Heat treated	[2]		
8	Heat treated	[3]		
303	Annealed	303		
303	Strain hardened	303		8F
304	Annealed	304		8F
304	Strain hardened	304	B8A	
316	Annealed	316	B8	8
316	Strain hardened	316	B8MA	
321	Annealed	321	B8M	
321	Strain hardened	321	B8TA	
347	Annealed	347	B8T	
347	Strain hardened	347	B8CA	
384	Annealed	384	B8C	
384	Strain hardened	384	C10	
410T	Heat treated	410	C10	
416T	Heat treated	416	B6	6
410H	Heat treated	410	B6F	6F
416H	Heat treated	416	B6	6
2024	T6	24T	B6F	6F
6061	T6	61T		
462		462		
464		464		
482		482		
510		510		
544		544		
632		632		
651		651		
655		655		
661		661		
675		675		
670		670		
400		400	NC or NICU	NC or NICU
405		405	NC/R or NICU/R	NC/R or NICU/R
500	Annealed and age hardened	500	•K•	•K•
T7	Annealed	T7		
T7	Solution treated and aged	T7		

1/ See table I for material type.

2/ Three radial lines equally spaced for externally threaded fasteners and three circumferential dashes equally spaced for nuts.

3/ Six radial lines equally spaced for externally threaded fasteners and six circumferential dashes equally spaced for nuts.

Downloaded from http://www.everyspec.com

3.5.1.1 Special requirements. In addition to the material identification, all externally threaded grade 500 (nickel-copper-aluminum alloy) fasteners 1/2 inch and larger in nominal size shall be marked with the material heat number and the manufacturer's symbol.

3.5.1.2 Different symbols. Use of symbols different from that specified in table VII shall require concurrence by the command or agency concerned.

3.6 Workmanship and discontinuities.

3.6.1 Fastener quality. Fasteners shall be in uniform quality and condition, free from rust and scale, and without broken, burred, or damaged threads.

3.6.1.1 Externally threaded fasteners. Externally threaded fasteners shall be inspected in accordance with SAE J123a, and shall meet the acceptance criteria specified therein (see 4.4.7).

3.6.1.2 Nuts. Nuts shall be inspected in accordance with SAE 122, and shall meet the acceptance criteria specified therein and in 4.4.7. Nuts larger than 1 inch nominal diameter shall be extrapolated as functions of diameter.

4. QUALITY ASSURANCE PROVISIONS

4.1 Responsibility for inspection. Unless otherwise specified in the contract or purchase order, the supplier is responsible for the performance of all inspection requirements as specified herein. Except as otherwise specified in the contract or order, the supplier may use his or any other facilities suitable for the performance of the inspection requirements specified herein, unless disapproved by the Government. The Government reserves the right to perform any of the inspections set forth in the specification where such inspections are deemed necessary to assure supplies and services conform to prescribed requirements.

4.1.1 Inspection system. The supplier shall provide and maintain an inspection system acceptable to the Government for supplies and services covered by this specification (see 6.2.2).

4.1.2 Quality assurance terms and definitions shall be in accordance with MIL-STD-109.

4.1.3 For the purposes of determining conformance with the requirements of this specification, an observed or calculated value shall be rounded off to the nearest unit in the last right-hand place of figures used in expressing the limiting value in accordance with the rounding off method of ASTM E 29.

4.2 Lot definitions. A lot is defined as either A or B below:

A - A lot of fasteners consists of one heat of material, of one type and style, of the same nominal size, and fabricated and heat treated in the same batch or by a continuous process under the same conditions as to time and temperature.

B - A lot of fasteners of one grade of material, of one type and style, of the same nominal size, and produced under essentially the same conditions.

4.2.1 For grade 500 and grade T7 materials, the lot definition A shall apply. For other materials, either A or B may be specified (see 6.2), depending on whether or not material of one heat is desired.

4.3 Sampling and acceptable quality level (AQL). Sampling and AQL shall be in accordance with tables VIII and IX.

Downloaded from http://www.everyspec.com

Table VIII. Sampling and AQL.

Type of test or inspection	Number of samples per lot or method
Chemical analysis	One for each heat
Decarburization	One for each furnace load
Dimension	MIL-STD-105, general inspection level I, AQL in accordance with table IX
Mechanical test[1/]	MIL-STD-105, special inspection level S-1, AQL = 1.5
Surface discontinuities	SAE J122 and J123a, as applicable
Plating	Applicable plating specification

[1/] Mechanical test includes all tests specified in table X. All of the required tests shall be performed on each sample. For fasteners which attain their properties through heat treatment, the samples shall be obtained from each furnace load or each continuous process. For fasteners which are fabricated from hardened material, or which require no heat treatment the samples shall be obtained from each heat of material (see 4.4.5 and 4.4.6).

Table IX - Examination requirements.

Description	Applicable fastener	AQL
Pitch diameter	Bolts, studs	2.5
Major diameter	Bolts, studs	2.5
Minor diameter	Nuts	2.5
Head height	Bolts	4.0
Thickness	Nuts	4.0
Distance across flats	Bolts, nuts	4.0
Width across corners	Bolts, nuts	4.0
Total run-out	Bolts	4.0
Body diameter	Bolts, studs	4.0
Overall length	Bolts, studs	4.0
Thread length	Bolts, studs	4.0
Fillet radius	Bolts	4.0
Diameter of washer face	Bolts, nuts	4.0
Straightness	Bolts, studs	4.0

4.4 Test procedures.

4.4.1 Chemical analysis. Chemical analysis shall be in accordance with FED-STD-151, and shall meet the applicable material specification requirements of table I. Standard deviation permitted for product analysis by the applicable specification applies. Certified heat analysis (see 4.5) furnished by the material manufacturer is acceptable in lieu of product analysis.

4.4.2 Decarburization. Decarburization examination shall be made in accordance with SAE J121, and shall meet the requirements of class B thereof (see 3.2.4).

4.4.3 Dimensions. Dimensions shall be measured using standard gauges in accordance with ANSI-B1.2. The fasteners dimension shall meet the requirements of 3.4.

4.4.4 Mechanical tests. Mechanical tests shall be in accordance with supplement III of ASTM A 370. The fixture for proof loading of nuts shall be in accordance with ASTM A 194, except that the contact area of the hardened steel cone may be flat with a maximum width of 3/32 inch for corrosion resistant steel and nonferrous nuts. The speed of testing, determined with a free running cross-head, shall not exceed 1/8 inch per minute for proof load or yield strength test, and one inch per minute for axial tensile or wedge tensile test. If the failure of a test sample is due to improper testing technique, the test results shall be discarded and a new test substituted. Mechanical properties and tests required shall be in accordance with table X and 4.4.4.1 through 4.4.4.6.

Downloaded from http://www.everyspec.com

Table X - Mechanical property test requirements.[1]

Products	Product size or tensile load	Test on full size fastener				Test on[4] machined specimen from fastener or parent stock
		Hardness[2]	Proof[3] load or yield strength	Axial tensile	Wedge tensile	
Bolts and screws	Length less than 3D	X	Option A	-	Option A	Option B
	Tensile load up to 150,000 lbs.	X	X	-	X	-
	Tensile load over 150,000 lbs.	X	Option A	-	Option A	Option B
Studs	Length less than 3D	X	Option A	Option A	-	Option B
	Tensile load up to 150,000 lbs.	X	X	X	-	-
	Tensile load over 150,000 lbs.	X	Option A	Option A	-	Option B
Nuts	Proof load up to 150,000 lbs.	X	X	-	-	-
	Proof load over 150,000 lbs.	X	5/	-	-	-

1/ The check marks (X) denote mandatory tests. The dash marks (-) denote tests not required. Where options are indicated, either all of the option A tests or the option B test shall be performed at the discretion of the manufacturer. The results of full size test shall take precedence over machined specimen test results for acceptance purposes where arbitration is necessary.

2/ Hardness test is required only where it is specified in tables II and III. Where both hardness and tensile property tests are performed, the results of the tensile properties shall take precedence over the hardness for acceptance purposes.

3/ The proof load test is applicable to carbon and alloy steel bolts, screws, and studs, and for nuts of all materials. The yield strength test is applicable to bolts, screws and studs of material other than carbon and alloy steels (see tables II and III).

4/ See 4.4.6.

5/ Test shall be made to a minimum load of 150,000 pounds and then continues up to the capacity of the equipment, or the required proof load, whichever occurs first.

4.4.4.1 Axial tensile. Full size studs, within the parameter given in table IV, shall be given an axial tensile test.

Downloaded from http://www.everyspec.com

4.4.4.2 Wedge tensile. Full size bolts or cap screws, within the parameter of table X shall be given a wedge test. For purpose of determining the wedge angle to be used, as specified in ASTM A 370, supplement III, the bolt or cap screw is considered threaded-to-head when the unthreaded portion of the shank, excluding the fillet radius, is 1/4 inch or less.

4.4.4.3 Proof load for externally threaded fasteners. The proof load test is required for carbon and alloy steel externally threaded fasteners (see table II). The proof load test shall be performed and measured prior to the axial or wedge tensile test.

4.4.4.4 Yield strength. The yield strength test is required for corrosion resistant steel and non-ferrous externally threaded fasteners (see table II). The yield test shall be performed and recorded prior to the axial or wedge tensile test. The following criteria for yield strength determination apply:

Corrosion resistant steels	:	0.2 percent offset
Aluminum Alloys	:	0.2 percent offset
Nickel Alloys	:	0.2 percent offset
Copper Alloys	:	0.5 percent extension under load.

4.4.4.5 Proof load for nuts. Proof load test is required for nuts of all materials within the parameter of table X. When tested in accordance with 4.4.5, with a proof load calculated in accordance with 3.2.3 and a loading time of ten seconds minimum, the nut shall resist this load without stripping or rupture, and shall be removable from the test bolt or mandrel. Use of a wrench to start the nut in motion is permissible providing the nut is removable by the fingers following wrench loosening of not more than half a turn (180 degrees) of the nut.

4.4.4.6 Hardness. Hardness test is required for fasteners when hardness values are given in tables II and III. Bolts and cap screws shall be tested on the side of the head. Studs shall be tested on either end. Nuts shall be tested on top face. Hardness test shall be made in accordance with ASTM E 18 and shall meet the requirements of tables II or III, when specified (see table X).

4.4.5 Machined tensile test specimens. Externally threaded fasteners which are too short or too large to be tested (see table X), the mechanical properties may be obtained from testing machined tensile specimens prepared in accordance with ASTM A 370 or ASTM E 8, as applicable. Test specimens may be machined from the externally threaded fasteners, or machined from the parent bar stock. For fasteners which require heat treatment to develope the required mechanical properties, the tensile specimens shall be machined from the heat treated fasteners, or from a piece of parent bar stock which had been heat treated in the same batch as the lot of fasteners. All of the properties specified in table II shall be met.

4.4.6 Testing of fasteners fabricated by cutting or grinding. Fasteners which are machined by cutting or grinding from bar stock which meets the required mechancial properties for fasteners without further heat treatment or working, such as heading or thread rolling, certified mechanical test reports (see 4.5) furnished by the bar stock supplier may be substituted for the mechanical tests required by table X.

4.4.7 Surface discontinuities. Fasteners shall be visually and non-destructively inspected in accordance with SAE J122 or J123a, as applicable, except that non-destructive testing shall be magnetic particle (wet method) or liquid penetrant inspection in accordance with MIL-STD-271. Acceptance criteria for externally threaded fasteners shall be in accordance with SAE J123a. Acceptance criteria for nuts shall be in accordance with SAE J122 except that seam depth shall not exceed 0.030D inch, where D is the dimension between sides. Method of depth determination may be made by comparing the dimension of an area where the seam has been removed by grinding, machining or filing with that of the adjacent area containing no seams. Seam depth determination shall be made on samples selected for cone proof load test by SAE J122 but before the cone proof load test. The cone proof load test specified herein are in addition to that specified in table IX. Formula for determining the proof load shall be in accordance with 3.2.3.

4.4.8 Protective coatings. Samples selected in accordance with the applicable plating document shall meet the requirements contained therein (see 3.3) except that the salt spray test is not required.

Downloaded from http://www.everyspec.com

4.5 Test reports. The supplier shall furnish a certified test report (see 6.2.2) for each lot of fasteners. The report shall be clearly identifiable to the related lot number and purchase order number, and shall indicate a lot definition, A or B (see 4.2), and performance of all the required inspections and tests and are acceptable. Chemical and mechanical tests shall show actual results of each heat or method specified in 4.4.

4.6 Inspection of preparation for delivery. The packaging, packing, and marking shall be inspected for compliance with section 5 of this specification.

5. PREPARATION FOR DELIVERY

(The preparation for delivery requirements specified herein apply only for direct Government procurements. For the extent of applicability of the preparation for delivery requirements of referenced documents listed in section 2, see 6.6.)

5.1 Packaging, packing, and marking. Fasteners shall be preserved-packaged level A or C, packed level A, B, or C (see 6.2), and marked in accordance with PPP-H-1581 except that bolts, screws, and studs over 5/8 inch shall be furnished with thread protectors or other suitable cushioning.

6. NOTES

6.1 Intended use. The selection of fasteners shall be in accordance with the applicable fabrication or component specification. The intended use for the various material grades is contained in table XI.

Table XI. Intended use of materials.

Material grades	Intended use
Carbon steel grades 1, 2, 5, 8	General use
Grade B7 externally threaded fasteners used with grade 2H or 4 nuts	For use up to 775°F
Grade B16 externally threaded fasteners used with grade 4 nut	For use up to 1000°F
Corrosion resistant steels	Radio and radar antennas and where low-magnetic or corrosion resisting properties are desired
Aluminum Alloys	For connecting aluminum alloys
Copper Alloys	For connecting non-ferrous materials (except aluminum) in contact with salt water
Nickel-copper Nickel-copper-aluminum Titanium alloy	For connecting ferrous or non-ferrous material (except aluminum) in contact with sea-water

6.1.1 Plated fasteners. Cadimum or zinc plating, in accordance with 3.3, shall be applied to grades 1, 2, 5, and 8 steel only and shall be used for services not to exceed 150°F.

Downloaded from http://www.everyspec.com

6.2 Ordering data.

6.2.1 Procurement requirements. Procurement documents should specify the following:

(a) Title, number, and date of this specification.
(b) Type, style, material grade, and heat treatment or condition of fasteners (see 1.2, 3.1, 3.2, and tables I, II, and III).
(c) Zinc or cadimum plating, if required (see 3.1 and 6.1.1).
(d) Size, length (for bolts and studs), thread series, and class of fit (see 3.4.1 and 3.4.4.2).
(e) Whether lot A or B is required (see 4.2.1).
(f) Levels of preservation-packaging and packing (see 5.1).

6.2.2 Contract data requirements. When this specification is used in a procurement invoking the data requirement clause of the Armed Services Procurement Regulations (ASPR) paragraph 7-104.9(n) and which incorporates a DD Form 1423 Contract Data Requirements List (CDRL), the data requirements identified below will be developed as specified in the cited Data Item Description (DID) and delivered in accordance with such CDRL. When the ASPR provisions are not invoked, the data specified below shall be delivered in accordance with the contract requirements.

Specification paragraph	Data requirements	Service	Applicable DID	Options
(a) 4.1.1	Inspection system program plan	SH	DI-R-4803	-------
(b) 4.5	Reports, test	SH	DI-T-2072	-------

(Copies of DID's required by the supplier in connection with a specific procurement functions should be obtained from the procuring activity or as directed by the contracting officer.)

6.3 Supersession data. This specification includes the requirements of MIL-S-1222F dated 9 December 1963, and Interim Amendment-4(SHIPS) thereto dated 31 March 1969; MIL-B-857A (SHIPS) dated 1 June 1956, and Amendment-5 thereto dated 28 February 1969; MS18116(SHIPS) dated 23 May 1969, and MS17980(SHIPS) dated 14 May 1963.

6.4 Material cross reference. The interchangability of material in this specification and other government specifications is listed in table XII.

Table XII - Material comparability.

MIL-S-001222G(SHIPS)	MIL-S-1222F	MIL-B-857A(SHIPS)[1/]	FF-N-836D[1/]
Grade 1		Grade 1	Grade 1
2		2	2
5		5	5
8		8	8
B7	B7		
B16	B16		
2H	H		
4	4		
303		303	303
304		304	304
305		305	305
316		316	316
321			
347			347
384			
410			410
416			416
2024			Aluminum Alloy
6061			
See footnotes at bottom of table.			

Downloaded from http://www.everyspec.com

Table XII - Material comparability (con.)

MIL-S-001222G(SHIPS)	MIL-S-1222F	MIL-B-857A(SHIPS)[1]	FF-N-836D[1]
462		Naval brass	Naval brass
464		Naval brass	Naval brass
482		Naval brass	Naval brass
510		Phosphor bronze	Phosphor bronze
544		Phosphor bronze	Phosphor bronze
632		Ni-Al bronze	Ni-Al bronze
651		Silicon bronze	Silicon bronze
655		Silicon bronze	Silicon bronze
661		Silicon bronze	Silicon bronze
675		Manganese bronze	Manganese bronze
400		Ni-Cu Class A	Ni-Cu Class A
405		Ni-Cu Class B	
500		Ni-Cu Class A1	Ni-Cu Class A1
T7			

[1] These fasteners may be used interchangeably with corresponding fasteners of other specifications until supply is depleted.

6.5 Fastener type cross-reference. The fastener types of this specification and the corresponding types in other government specifications are listed in table XIII.

Table XIII. Fastener type comparability.

	MIL-S-001222G(SHIPS)	MIL-S-1222F	MIL-B-857A(SHIPS)[1]	FF-S-85C	FF-N-836D
Stud	Type I Type II Type III Type IV	Bolt-stud	Type I Type II		
Bolt	Type I Type II Type III		Type I Type II		
Cap screw	Type I		Type III bolt	Type II, style 10p	
Nut	Type II Type II Type III Type IV	Finished Hex nut Semi-finished Hexagon nut	Type III Type V		Type II, style 4 Type II, style 5 Type II, style 11 Type II, style 12

[1] Types IV and V bolts, and types I, II, V, VI, and VII nuts of MIL-B-857A has been omitted from this specification.

6.6 Sub-contracted material and parts. The preparation for delivery requirements of referenced documents listed in Section 2 do not apply when material and parts are procured by the supplier for incorporation into the equipment and lose their separate identity when the equipment is shipped.

6.7 CHANGES FROM PREVIOUS ISSUE . THE EXTENT OF CHANGES (DELETIONS, ADDITIONS, ETC.) PRECLUDE THE ANNOTATION OF THE INDIVIDUAL CHANGES FROM THE PREVIOUS ISSUE OF THE DOCUMENT.

Preparing activity:
Navy - SH
(Project 5307-N010)

Downloaded from http://www.everyspec.com

STANDARDIZATION DOCUMENT IMPROVEMENT PROPOSAL

OMB Approval
No. 22-R255

INSTRUCTIONS: The purpose of this form is to solicit beneficial comments which will help achieve procurement of suitable products at reasonable cost and minimum delay, or will otherwise enhance use of the document. DoD contractors, government activities, or manufacturers/vendors who are prospective suppliers of the product are invited to submit comments to the government. Fold on lines on reverse side, staple in corner, and send to preparing activity. Comments submitted on this form do not constitute or imply authorization to waive any portion of the referenced document(s) or to amend contractual requirements. Attach any pertinent data which may be of use in improving this document. If there are additional papers, attach to form and place both in an envelope addressed to preparing activity.

DOCUMENT IDENTIFIER AND TITLE

NAME OF ORGANIZATION AND ADDRESS

CONTRACT NUMBER

MATERIAL PROCURED UNDER A

☐ DIRECT GOVERNMENT CONTRACT ☐ SUBCONTRACT

1. HAS ANY PART OF THE DOCUMENT CREATED PROBLEMS OR REQUIRED INTERPRETATION IN PROCUREMENT USE?
   A. GIVE PARAGRAPH NUMBER AND WORDING.

   B. RECOMMENDATIONS FOR CORRECTING THE DEFICIENCIES

2. COMMENTS ON ANY DOCUMENT REQUIREMENT CONSIDERED TOO RIGID

3. IS THE DOCUMENT RESTRICTIVE?

   ☐ YES ☐ NO *(If "Yes", in what way?)*

4. REMARKS

SUBMITTED BY *(Printed or typed name and address - Optional)*

TELEPHONE NO.

DATE

DD FORM 1 JAN 72 1426

REPLACES EDITION OF 1 JAN 66 WHICH MAY BE USED

S/N 0102-014-1802

☆ U.S. GOVERNMENT PRINTING OFFICE: 1972—714-863/3404 2-1

Downloaded from http://www.everyspec.com

FOLD

COMMANDER
NAVAL SHIP ENGINEERING CENTER
CENTER BUILDING - SEC 6124
PRINCE GEORGES CENTER
HYATTSVILLE, MARYLAND 20782

OFFICIAL BUSINESS
PENALTY FOR PRIVATE USE $300

POSTAGE AND FEES PAID
DEPARTMENT OF NAVY

DOD 316

U.S.MAIL

COMMANDER
NAVAL SHIP ENGINEERING CENTER
CENTER BUILDING - SEC 6124
PRINCE GEORGES CENTER
HYATTSVILLE, MARYLAND 20782

FOLD