|METRIC|
MIL-S-29580B
16 December 1993
SUPERSEDING
MIL-S-29580A
16 July 1991

MILITARY SPECIFICATION

SPECTACLES, AVIATOR'S, MULTIPLE WAVE LENGTH LASER PROTECTIVE, EDU-5/P (WITH CASE)

This specification is approved for use by all Departments and Agencies of the Department of Defense.

1. SCOPE

1.1 Scope. This specification covers the requirements for rotary and fixed wing aviator's spectacles with carrying case, designated EDU-5/P, which provide protection against multiple fixed laser wavelengths (see 6.2b). It shall be compatible with the Chemical Biological Radiological (CBR) Protective Assembly.

2. APPLICABLE DOCUMENTS

2.1 Government documents.

2.1.1 Specifications and standards. The following specifications and standards form a part of this specification to the extent specified herein. Unless otherwise specified, the issues of these documents are those listed in the issue of the Department of Defense Index of Specifications and Standards (DODISS) and supplement thereto, cited in the solicitation (see 6.2c).

SPECIFICATIONS

FEDERAL

L-P-375	-	Plastic Film, Flexible, Vinyl Chloride
PPP-B-636	-	Boxes, Shipping, Fiberboard

MILTARY

MIL-P-116	-	Preservation, Methods of
MIL-C-83409	-	Coating, Visor, Polycarbonate, Flying Helmet

Beneficial comments (recommendations, additions, deletions) and any pertinent data which may be of use in improving this document should be addressed to: Commanding Officer, Naval Air Warfare Center Aircraft Division Lakehurst, Systems Requirements Department, Code SR3, Lakehurst, NJ 08733-5100, by using the self-addressed Standardization Document Improvement Proposal (DD Form 1426) appearing at the end of this document or by letter.

AMSC N/A FSC 8465

STANDARDS

FEDERAL

FED-STD-595	-	Colors

MILITARY

MIL-STD-100	-	Engineering Drawing Practices
MIL-STD-105	-	Sampling Procedures and Tables for Inspection by Attributes.
MIL-STD-129	-	Marking for Shipment and Storage
MIL-STD-130	-	Identification Marking of U.S. Military Property
MIL-STD-662	-	V50 Ballistic Test for Armor
MIL-STD-810	-	Environmental Test Methods & Engineering Guidelines

(Unless otherwise indicated, copies of the federal and military specifications, standards, and handbooks are available from the DODSSP, Customer Service, Standardization Documents Order Desk, 700 Robbins Avenue, Bldg 4D, Philadelphia, PA 19111-5094.)

2.1.2 Other Government documents, drawings, and publications. The following other Government documents, drawings, and publications form a part of this document to the extent specified herein. Unless otherwise specified, the issues are those cited in the solicitation.

NAVAL AIR SYSTEMS COMMAND

DRAWINGS

3360AS100	-	Index
3360AS101	-	Frame Assembly
3360AS102	-	Eyewire Details
3360AS103	-	Side arm Assembly and Details
3360AS104	-	Bridge Assembly and Hardware Details
3360AS105	-	Markings

MANUAL

13-1-6.7	-	Aircrew Personal Protective Equipment

(Application for copies should be addressed to the Contracting Officer.)

US POSTAL SERVICE

Laws and Regulations

(Application for copies should be addressed to the Superintendent of Documents, Government Printing Office, Washington, DC 20402.)

NATIONAL BUREAU OF STANDARDS (NBS)

NBS Circular 533

NBS Special Publications 374 (Cat. No. C13.10374)

(Application for copies should be addressed to the Superintendent of Documents, Government Printing Office, Washington, DC 20402.)

2.2 Non-Government publications. The following documents form a part of this document to the extent specified herein. Unless otherwise specified, the issues of the documents which are DoD adopted are those listed in the issue of the DODISS cited in the solicitation. Unless otherwise specified, issues of documents not listed in the DODISS are the issues of the documents cited in the solicitation (see 6.2c).

AMERICAN SOCIETY FOR TESTING AND MATERIALS (ASTM)

ASTM D1003 - Standard Test Methods for Haze and Luminous Transmittance of Transparent Plastic

ASTM D3935-87 - Standard Specification for Polycarbonate (PC) Unfilled and Reinforced Material

(Application for copies should be addressed to the American Society for Testing and Materials, 1916 Race Street, Philadelphia, PA 19103-1137.)

NATIONAL MOTOR FREIGHT TRAFFIC ASSOCIATION, INC., AGENT

National Motor Freight Classification

(Application for copies should be addressed to the National Motor Freight Traffic, Tariff Order Section, 1616 P Street, N.W., Washington, DC 20036.)

UNIFORM CLASSIFICATION COMMITTEE, AGENT

Uniform Freight Classification

(Application for copies should be addressed to the Uniform Classification Committee, Room 1106, 222 South Riverside Plaza, Chicago, IL 60606.)

(Non-Government standards and other publications are normally available from the organizations that prepare or distribute the documents. These documents also may be available in or through libraries or other informational services.)

2.3 Order of precedence. In the event of a conflict between the text of this document and the references cited herein, (except for related associated detail specifications, specification sheets, or MS standards) the text of this document takes precedence. Nothing in this document, however, supersedes applicable laws and regulations unless a specific exemption has been obtained.

3. REQUIREMENTS

3.1 First article. When specified (see 6.2d), the spectacles shall be subjected to first article inspection (see 6.4) in accordance with 4.3.

3.2 Materials. Materials shall conform to applicable specifications and as specified herein. Materials which are not covered by applicable specifications or which are not specifically described herein, shall be of the best quality, of the lightest practicable weight and suitable for the purpose intended.

3.3 Design and construction. The spectacles shall afford protection for aircrew against multiple fixed laser wavelengths. They shall be compatible with all helmets, visors, and other head attached hardware that Navy, Army, and Air Force rotary and fixed wing aircrew may use. They shall not require external power or apparatus. All cockpit displays, phosphors (P43), and lights shall be visible when the spectacles are worn. It shall be possible for a prescription to be incorporated into the lens and the contractor shall be responsible for producing the prescription lenses. Incorporation of a prescription shall not compromise any of the performance requirements in this specification.

3.3.1 Frame. The frame shall be corrosion and heat resistant and shall be used by rotary and fixed wing aircrew members. The color of the frame shall be black, approximately matching color number 37038 of FED-STD-595. The frame shall be in accordance with drawings 3360AS100, 3360AS101, 3360AS102, 3360AS103, 3360AS104, and 3360AS105 or equivalent. It shall be compatible with the CBR Protective Assembly, Type Designator A/P22P-9(V). If various frame sizes are required to meet the protective requirements, these sizes shall be marked on the frame and shall be in accordance with 3.7.1.1b.

3.3.2 Lenses. The lenses shall be designed and fabricated to provide the protection requirements of this specification. Prescription lenses shall be as prescribed. The front and back surfaces of the lens shall be coated with an anti-reflection coating. The lenses shall have a scratch resistant coating in accordance with MIL-C-83409. Plastic material used for the spectacle lenses shall be in accordance with ASTM D3935-87. Markings on the lenses shall be in accordance with 3.7.1.1a.

3.3.3 Carrying case. A carrying case shall be provided with each pair of spectacles. The case shall be crush resistant and shall approximately match color number 30450 of FED-STD-595. Markings on the carrying case shall be in accordance with 3.7.1.

3.3.3.1 Case covering. The case covering shall be flexible vinyl chloride film conforming to the requirements of L-P-375 for the 0.020 inch thickness of type I, class 2, except that the thickness shall be 0.89±0.09 mm, the ultimate elongation (transdirection) shall be 200 percent minimum and the stiffness (Clark at 24°C (75°F)) shall be 20±3 cm. The outer surface of the case covering shall have a simulated natural grain leather finish. The inside surface of the case shall have a smooth finish.

3.3.3.2 Case insert. The case insert shall be made from unfilled polypropylene resin having a density of 900 to 910 Kg/m^3 and a miniumum tensile strength of 27.6 MPa. Reclaimed materials should be used to the maximum extent possible.

3.3.3.3 Support equipment.

3.3.3.3.1 Field test monitor. If the spectacles utilize an eye centered design, a field monitor shall be provided to verify proper positioning on the user. The monitor shall be small, lightweight and simple to use. It shall not require electrical power.

3.3.3.3.2 Lens overlay template. If the spectacles utilize an eye centered design, a lens overlay template shall be provided to locate the optical center of the lenses.

3.4 Performance.

3.4.1 Visual examination. When visually examined as specified in 4.6.1, the spectacles and carrying case shall conform to the requirements of this specification. Table III, Classification of Defects for Visual and Dimensional Examination, shall be used to classify and enumerate the defects.

3.4.2 Spectacles (optical requirements).

3.4.2.1 Matching. When tested as specified in 4.6.2.1, the design eyepoint of the right and left lenses of the spectacles shall match in location and shall match at the design eyepoint of each lens in sign, prism and power to the requirements of 3.4.2.2.1, 3.4.2.2.2. and 3.4.2.3. Prescription lenses shall be as prescribed.

3.4.2.2 Prismatic deviation (optical power).

3.4.2.2.1 Vertical prismatic deviation. Prismatic power, when measured at the design eyepoint of the right and left lens as specified in 4.6.2.2.1, shall not:

a. Differ by more than 0.00 diopters for prism of opposite base (i.e., base up - base down = 0.00).

b. Differ by more than 0.125 diopters for prism of the same base (i.e., base up - base up = 0.125, or base down - base down = 0.125).

c. Exceed a total of 0.20 prism diopters for prism of the same base (i.e., base up + base up = 0.20, or base down + base down = 0.20.

3.4.2.2.2 Horizontal prismatic deviation. The algebraic sum of horizontally oriented prism, when measured at the design eye point of the right and left lens as specified in 4.6.2.2.2, shall not:

a. Exceed 0.20 diopters for prism of opposite base (i.e., base out + base in = 0.20).

b. Exceed 0.20 diopters for base out prism (i.e., base out + base out = 0.20).

c. Exceed 0.125 diopters for base in prism (i.e., base in + base in = 0.125).

The overall difference in prism between right and left lens irrespective of base shall be not greater than 0.125 diopters.

3.4.2.3 Spherical and cylindrical power. The spherical and cylindrical power of the plano lenses, when measured as specified in 4.6.2.1 and 4.6.2.3, shall be not greater than ±0.125 diopters at any point on the lens. The comparable value of prescription lenses shall be as prescribed.

3.4.2.4 Lens defects. The spectacle lenses, when tested as specified in 4.6.2.4, shall be free from irregularities affecting optical qualities which would cause sudden jumps and blurring of the visual scene when viewed through the spectacles.

3.4.2.5 Lens fit. The spectacles, when inspected as specified in 4.6.2.5, shall show no evidence of visible space between the frame and lens.

3.4.2.6 Curvature. The curvature of the lenses shall be no less than 6 diopters ±0.25 diopter, nor more than 15.5 diopters ±0.25 diopter based on the design approach chosen when measured as specified in 4.6.2.6. The comparable value of prescription lenses shall be as prescribed.

3.4.3 Spectral transmittance requirements.

3.4.3.1 Optical density and angular protection. The spectacles shall protect the human eye against multiple fixed wavelengths of laser radiation when tested as specified in 4.6.3.1. The spectacles shall have the required optical density in the specified threat wavelengths (see 6.2b) regardless of the threat angle of incidence.

3.4.3.2 Transmittance. The photopic transmittance when tested as specified in 4.6.3.2, shall be 18 percent or greater. The scotopic transmittance shall be 40 percent or greater. Photopic and scotopic transmittance shall not differ by more than 10 percent between lenses or over the surface of a lens.

3.4.3.3 Near-infrared transmittance. The average near-infrared transmittance when computed as specified in 4.6.3.3, shall be less than 15 percent.

3.4.3.4 Erythemal ultraviolet transmittance. The erythemal ultraviolet transmittance of the lenses, when computed as specified in 4.6.3.4, shall not be greater than 0.2 percent.

3.4.3.5 Haze. The haze value of the lenses shall be minimized and when determined as specified in 4.6.3.5, shall not be greater than 3 percent.

3.4.3.6 Abrasion resistance. After being subjected to the abrasion test specified in 4.6.3.6, the haze shall not be greater than 6 percent and the transmittance shall not decrease by more than 4 percentage points (e.g. an initial value of 20% transmittance cannot decrease to less than 16 percent).

3.4.4 Environmental requirements.

3.4.4.1 Radiation induced damage resistance. Transitory or permanent radiation induced changes in the density or transmittance of the lens shall not occur at levels typical of those to which aircrew may be exposed during operation when tested as specified in 4.6.4.1 and 4.6.4.2. This shall include laser radiation and sunlight.

3.4.4.2 High temperature. The spectacles shall withstand high temperature stresses when tested as specified in accordance with 4.6.4.3.

3.4.4.3 Low temperature. The spectacles shall withstand low temperature stresses when tested in accordance with 4.6.4.4.

3.4.4.4 Temperature shock. The spectacles shall withstand the effects of rapid changes in ambient temperature when tested in accordance with 4.6.4.5.

3.4.4.5 Rain. The spectacles shall withstand the effects of prolonged exposure to blowing rain when tested in accordance with 4.6.4.6.

3.4.4.6 Humidity. The spectacles shall be capable of storage and operation under wide temperature and humidity extremes when tested in accordance with 4.6.4.7.

3.4.4.6.1 Adhesion of coating. The coating shall not be removed, dislodged or affected in any way when tested as specified in 4.6.4.7.1. Removal or loosening of the coating shall be cause for rejection.

3.4.4.7 Salt fog resistance. The spectacles shall withstand the effects of prolonged environmental salt fog when tested as specified in 4.6.4.8.

3.4.5 Ballistic resistance. there shall be no penetration, spall or cracks in the spectacle lenses when tested as specified in 4.6.5.

3.4.6 Frame.

3.4.6.1 Corrosion resistance. There shall be no evidence of corrosion on any of the significant surfaces (those surfaces in contact with the wearer) when tested as specified in 4.6.6.1.

3.4.6.2 Heat resistance. There shall be no visible signs of blistering, discoloration or visible white or crystalline film when tested as specified in 4.6.6.2.

3.4.6.3 Ductility. There shall be no visible cracks passing completely across the part when tested as specified in 4.6.6.3.

3.4.6.4 Adhesion of plating. Adhesion of any plating and underplating shall be such that the coating and undercoating shall not separate from each other or from the base metal when tested as specified in 4.6.6.4.

3.4.7 Crush resistance of carrying case. The carrying case shall not show any evidence of material failure and shall prevent any damage to the spectacles within the case when tested as specified in 4.6.7.

3.4.8 Support equipment.

3.4.8.1 Field test monitor. The field test monitor shall be used to ensure that the protective eyewear are properly positioned on the user if an eye centered approach has been chosen.

3.4.8.2 Lens overlay template. In order to support fitting and adjustment procedures of the spectacles, the lens overlay template shall locate the optical center of the lenses and allow this location to be temporarily marked on the lens.

3.5. Weight. The spectacles shall be as lightweight as possible without compromising the protection levels.

3.6 Interchangeability. All parts having the same manufacturer's part number shall be functionally and dimensionally interchangeable. The drawing number requirements of MIL-STD-100 shall govern changes in the manufacturer's part numbers.

3.7 Identification marking.

3.7.1 Carrying case. The front flap of the carrying case shall be marked in accordance with MIL-STD-130 by heat embossing and shall contain the following information:

SPECTACLES, AVIATOR'S, MULTIPLE WAVELENGTH LASER
PROTECTIVE
MIL-S-29580
BALLISTIC RESISTANT - NOT SAFETY GLASSES
MANUFACTURER'S IDENTIFICATION
CONTRACT OR ORDER NO.

3.7.1.1 Spectacles marking. Markings on the spectacles shall not cause them to be classified. The spectacles shall include the following additional marking:

a. Each lens shall be identified and controlled from the time of final assembly. The lot number, lens number (or an equivalent method of identifying each lens) and the word "multi-laser" shall be grit blasted (or an equivalent method that shall be permanent and not damage the lenses) in 2 mm high characters on the upper, outside corner of each lens. The identification markings shall not interfere with the optical quality of the lens.

b. If an eye centered approach is used, the interpupillary distance (IPD-defined as the distance between the optical centers of the two lenses) shall be indicated on the nose bridge. The side arm assemblies shall be marked in accordance with drawing 3360AS105.

3.7.2 Caution notice. The caution notice shall be placed in the unit package with the carrying case. The notice shall be printed on white paper and shall read as follows:

CAUTION NOTICE: These laser protection spectacles are a hazard/threat countermeasure device. They have been designed to protect aircrew personnel from the harmful effects of exposure to multiple laser wavelengths. The wave lengths and optical density are classified information and can be obtained from:

Commanding Officer
Naval Air Warfare Center
Aircraft Division Warminster
ATTN: Vision Laboratory (6023)
P. O. Box 5152
Warminster, PA 18974-0591

In order to provide the desired protection, the spectacles must be cared for and used properly. Always keep the spectacles in their case when not being used. To clean the lenses, remove all dust and dirt with a soft, dry cloth. Then clean the lenses with a moist cloth or by steaming with breath. Finally, dry lenses with a soft, clean, facial tissue or lint-free cloth. If the spectacles are damaged, do not use them.

Each pair of spectacles is a controlled item and should be disposed of in accordance with NAVAIR Manual 13-1-6.7.

The following points are important for your safety:

a. These spectacles do not protect against all lasers.
b. These spectacles are not intended for maintenance personnel or personnel using magnifying optical devices such as binoculars or telescopes.
c. These spectacles are not sunglasses.

3.8 Workmanship. The spectacles shall be constructed to produce an item free from all defects which would affect proper functioning in service. The spectacles shall conform to the quality and grade of product established by this specification. The occurrence of defects shall not exceed the acceptance criteria established in Table II.

4. QUALITY ASSURANCE PROVISIONS

4.1 Responsibility for inspection. Unless otherwise specified in the contract or purchase order, the contractor is responsible for the performance of all inspection requirements (examinations and tests) as specified herein. Except as otherwise specified in the contract or purchase order, the contractor may use his own or any other facilities suitable for the performance of the inspection requirements specified herein, unless disapproved by the Government. The Government reserves the right to perform any of the inspections set forth in this specification where such inspections are deemed necessary to ensure supplies and services conform to prescribed requirements.

4.1.1 Responsibility for compliance. All spectacles shall meet all requirements of sections 3 and 5. The inspection set forth in this specification shall become a part of the contractor's overall inspection system or quality program. The absence of any inspection requirements in the specification shall not relieve the contractor of the responsibility of ensuring that all products or supplies submitted to the Government for acceptance comply with all requirements of the contract. Sampling inspection, as part of manufacturing operations, is an acceptable practice to ascertain conformance to requirements, however, this does not authorize submission of known defective material, either indicated or actual, nor does it commit the Government to accept defective material.

4.2 Classification of inspection. The inspection requirements specified herein are classified as follows:

a. First article inspection. First article inspection consists of tests and examinations performed on samples which are representative of the production item after award of contract to determine that the production item conforms to the requirements of this specification (see 4.3).

b. Quality conformance inspection. Quality conformance inspection consists of tests and examinations performed on individual products or lots with the requirements set forth in this specification (see 4.4).

c. Quality conformance verification inspection. Quality conformance verification inspection shall consist of tests and examinations performed on selected products from the lot at a Government approved facility (see 4.5).

4.3 First article inspection. First article inspection shall consist of all the examinations and tests specified in Table I.

4.3.1 First article samples. Unless otherwise specified, as soon as practical after award of the contract or order, the manufacturer shall submit twelve complete assembled spectacle samples, two spare frames, two field monitors (if required) and two sets of lens overlay templates (The field test monitors and the lens overlay templates are required only if the spectacles are an eye centered approach design (see 3.3.3.3). The samples shall include prescription spectacles when specified (see 6.2d). The samples shall be representative of the construction, workmanship, components and materials to be used during production. When a manufacturer is in continuous production of the spectacles from contract to contract, submission of further first article inspection samples on the new contract may be waived at the discretion of the acquiring activity (see 6.2e). Approval of the first article inspection sample or waiving of the first article inspection does not preclude the requirements for performing the quality conformance inspection. The first article inspection samples shall be furnished to the Government as directed by the contracting officer (see 6.2f).

4.3.1.1 First article inspection completion. Upon the completion of the first article inspection program, recommendations and comments pertinent to the program will be forwarded by the Government activity responsible for the first article inspection (see 6.2f) to the Contracting Officer. One approved pair of spectacles shall be returned to the manufacturer for use in monitoring production. The remaining samples will be consumed or destroyed in the first article inspection and shall not be considered as part of the quantity to be delivered under contract.

4.3.1.2 Certification of compliance. When specified (see 6.2g), components and materials may be accepted on the basis of the contractor's certification of compliance with the requirements of this specification. The certification shall be accompanied with test, inspection or other verifiable data. The Government reserves the right to verify the validity of the certification.

4.4 Quality conformance inspection. Quality conformance inspection shall consist of the examinations and tests specified in Table II. The sampling and inspection levels and acceptance criteria shall conform to MIL-STD-105, where applicable.

4.4.1 Sampling.

4.4.1.1 Inspection lot.

4.4.1.1.1 Spectacles. An inspection lot shall be expressed in sample units which are defined as one pair of spectacles with carrying case, made under essentially the same conditions and from the same materials as the production units.

4.4.1.1.2 Packaging. An inspection lot shall be expressed in units of one fully prepared shipping container, containing pairs of spectacles (with case), fully prepared for delivery. The sample unit shall be one shipping container, containing pairs of spectacles with carrying case, fully prepared for delivery with the exception that it need not be sealed. The contractor shall provide a sample of materials to be used for closure of the shipping container.

4.4.1.2 Sampling for tests and examinations of the spectacles with case. The sample size and acceptance criteria for tests and examinations for the spectacles with case shall be as specified in Table II.

4.5 Quality conformance verification inspection at an inspection facility. Upon completion of the tests and examinations in 4.4.1.2, a random sample shall be selected from each lot in accordance with MIL-STD-105, Inspection Level S-3. The sample size shall be based only on the applicable sample size code letter corresponding to the Inspection Level S-3. Each pair of spectacles selected as a sample unit shall be identified as assigned (see 3.6), and shall be forwarded to the Government laboratory specified in the acquisition document (see 6.2.f), for the following tests and examinations (listed sequence mandatory):

REQUIREMENTS AND EXAMINATIONS

Visual and dimensional examination	3.4.1 and 4.6.1
Optical density	3.4.3.1 and 4.6.3.1
Luminous transmittance	3.4.3.2 and 4.6.3.2
Erythemal ultraviolet transmittance	3.4.3.4 and 4.6.3.4
Haze	3.4.3.5 and 4.6.3.5
Prismatic deviation (optical power)	3.4.2.2 and 4.6.2.2

The number of sample units selected from the lot shall be furnished to the Government laboratory. Sample units from a rejected lot shall not be resubmitted for tests and examinations without the approval of the contracting officer. Upon completion of the testing, the sample units will be returned to the contractor at the contractor's expense. The Government activity responsible for conducting the

inspection program (see 6.2f) shall report the results of the tests and examinations to the designated inspection and acceptance office specified in the acquisition document. Final acceptance shall be based upon successful completion of the inspection program by the cognizant Gorvernment quality assurance representative/specialist; applying the applicable acceptance criteria specified in Table III.

4.6 Inspection methods.

4.6.1 Visual and dimensional examination. Every pair of spectacles (with case), shall be examined visually and dimensionally, to determine conformance to this specification. The classification of defects in Table III shall be used to classify the defects found.

4.6.1.1 Packaging inspection. Each of the fully prepared shipping containers, containing pairs of spectacles, selected as a sample unit from the lot, shall be visually examined to determine that the packaging, packing and marking conform to this specification and the applicable drawing. The list of defects in Table IV shall be used to define the defects.

4.6.2 Optical inspections.

4.6.2.1 Matching. Matching of pairs of spectacle lenses within their frames, for location of design eyepoint, prism and power shall be determined with a telescope, vertometer, lensometer, projection lantern or any other instrument that can perform this test. The instrument shall include a target which can be brought into sharp focus, as observed through an eyepiece or projected on a screen and an aperture not over 1 centimeter in diameter fixed at a definite position along the axis of the optical system. The design of the system shall be such that refractive power in the principle meridian of the lens placed across the test aperture can be determined to within 0.06 diopter. The spectacles shall pass the requirements specified in 3.4.2.1.

4.6.2.2 Prismatic deviation (optical power).

4.6.2.2.1 Vertical prismatic deviation. The spectacles shall be tested for vertical prismatic deviation using the method specified in 4.6.2.1. Base up prism shall be designated positive (+) and base down prism shall be designated negative (-). The vertical prismatic deviation shall be calculated by determining the algebraic sum and difference between the amount of prism at the design eyepoint of one lens as worn, and the amount of prism at the design eyepoint of the other lens as worn, and shall pass the requirements specified in 3.4.2.2.1.

4.6.2.2.2 Horizontal prismatic deviation. The spectacles shall be tested for horizontal prismatic deviation using the method specified in 4.6.2.1. Base out prismatic deviation shall be designated positive (+) and base in prismatic deviation shall be designated negative (-). The horizontal prismatic deviation shall be calculated by determining the algebraic sum and difference between the amount of prism at the design eyepoint of one lens as worn, and the amount of prism at the design eyepoint of the other lens as worn, and shall pass the requirements specified in 3.4.2.2.2.

4.6.2.3 Spherical and cylindrical power. The spectacles shall be tested for spherical and cylindrical power using the method specified in 4.6.2.1. The spherical and cylindrical power shall pass the requirements specified in 3.4.2.3.

4.6.2.4 Lens defects. The spectacle lenses shall be inspected for material defects affecting the optical qualities by examining each lens against the NBS Special Publication 374 or NBS Circular 533 high contrast chart or equivalent. The lenses shall be examined for irregularities causing sudden jumps or blurring of the image and shall pass the requirements specified in 3.4.2.4.

4.6.2.5 Lens fit. The contact area between the frame and lens of the spectacles shall be inspected with a strong, neutral, non-glaring light behind the spectacles. Any visible light between the frame and lens indicates a space exists between the frame and lens. The spectacles shall pass the requirements specified in 3.4.2.5.

4.6.2.6 Curvature. The outside curvature of the spectacle lenses shall be measured by a Geneva lens measure or equivalent. Three measurements shall be made on each lens to the nearest 0.125 diopter. The lens outside curvature shall pass the requirements specified in 3.4.2.6.

4.6.2.7 Prescription lenses. Prescription lenses shall be as prescribed and shall be tested as specified in 4.5.2.1 through 4.5.2.6.

4.6.3 Spectral transmittance inspections.

4.6.3.1 Optical density and angular protection. The optical densities shall be measured at all angles at which incident laser radiation in the specified threat wavelengths bands may enter the eye. The calculation for angular protection shall be for an eye with an 8 mm diameter pupil rotated ±35 degrees with respect to the optic axis of the lens. The eye relief (distance from the rear of the spectacle lens to the cornea) shall be no greater than 24.0 mm. The measurements shall be made with a spectrophotometer, a photometer, lasers of the appropiate wavelengths, or any equivalent method. The densities shall pass the requirements specified in 3.4.3.1.

4.6.3.2 Transmittance. The photopic and scotopic transmittance of the spectacle lenses shall be computed as shown in Table V or equivalent method. The lenses shall pass the requirements specified in 3.4.3.2.

4.6.3.3 Near-infrared transmittance. The near-infrared transmittance of the spectacle lenses shall be computed as the average of the spectral transmittances at 50 nm steps in the spectral region of 800 to 1200 nm. The lenses of the spectacles shall pass the requirements specified in 3.4.3.3.

4.6.3.4 Erythemal ultraviolet transmittance. The erythemal ultraviolet transmittance of the spectacle lenses shall be computed by averaging the transmittances at wavelengths of 290, 300, 310 and 320 nm. The lenses shall pass the requirements specified in 3.4.3.4.

4.6.3.5 Haze. The haze shall be determined in accordance with Procedure A of ASTM D1003. The spectacle lenses shall pass the requirements specified in 3.4.3.5.

4.6.3.6 Abrasion resistance. The haze and transmittance of the lenses shall be determined before and after the abrasion test as specified in ASTM D1003. The abrasion test shall be performed by rubbing with a specially standardized eraser mounted as illustrated in Figure 2 and held approximately normal to the lens. The eraser shall be rubbed across the surface of the coated lens from one point to

another, over the same path, for 20 complete cycles with a force of 4.4 to 5.5 kilograms continously applied. Wherever possible, rubs of about 25 mm length are preferred. After the rubbing has been completed, the lens shall be thoroughly cleaned to remove dirt, film, fingermarks and grease marks using a mild detergent and water followed by drying with a soft cloth or lens tissue. The lens shall pass the requirements of 3.4.3.6.

4.6.4 Environmental inspections.

4.6.4.1 Solar radiation. The spectacles shall be placed in a solar simulator (Weatherometer or equivalent). The total incident flux shall be monitored and recorded throughout the exposure. At the completion of each exposure cycle, optical density and angular protection (4.6.3.1) and transmittance (4.6.3.2) (excluding abrasion resistance (4.6.3.6) shall be recorded. The exposure test cycle shall be repeated until either the spectacles fail or the equivalent of 312 days (estimate based on a two year service life with an average of 3 missions per week) of exposure is reached. At test completion, the spectacles shall pass optical density and angular protection (3.4.3.1), transmittance (3.4.3.2), abrasion resistance (3.4.3.6), lens defects (3.4.2.4), and ballistic resistance (3.4.5).

4.6.4.2 Laser saturation. The spectacles shall be spectrally scanned with a spectrophotometer before and after the laser saturation tests and the results recorded. The spectacles shall be exposed to laser energies at the protective wavelengths starting at an intensity below which any bleaching and/or damage will occur. The intensity shall be increased until reversible saturation (temporary bleaching) and/or damage to the spectacles occurs. The results shall be stated in terms of wavelength and energy density at which bleaching and/or damage occur.

4.6.4.3 High temperature. The spectacles shall be tested in accordance with MIL-STD-810, Method 501.3, Procedure I and the procedure outlined below. The spectacles shall be placed in the test chamber ensuring that they are positioned so that the entire front surface can be photographed from the viewing port without disturbing the sample. A white light source shall be positioned behind the item so that the illumination is uniform throughout the sample. The test sequence as specified below shall be followed:

Step 1 - Prepare the sample in accordance with MIL-STD-810, General test performance guidance 5.2.

Step 2 - Raise the internal temperature to 38°C (100°F). After temperature stabilization, photograph the spectacles.

Step 3 - Maintain internal temperature at 38°C for 6 hours. Photograph the spectacles at the end of the 2nd and the end of the 6th hours.

Step 4 - Raise temperature to 66°C (151°F) over a 1 hour time period and maintain that temperature for an additional 4 hours.
  a. Photograph spectacles after stabilizing the temperature at 66°C.
  b. Photograph spectacles at the end of the 2nd and 4th hours.

Step 5 - Lower chamber temperature to 38°C (100°F) within a time period of 1 hour.
a. Photograph spectacles after temperature stabilization.

Step 6 - Repeat steps 3, 4, and 5 two additional times.

The spectacles shall pass the requirements of 3.4.4.2. Following the high temperature test, the spectacles shall pass the requirements of 3.4.2 and 3.4.3.

4.6.4.4 Low temperature. The spectacles shall be tested in accordance with MIL-STD-810, Method 502.3, Procedure I and the procedure outlined below. The spectacles shall be placed in the test chamber ensuring that it is positioned so that the entire front surface can be photographed from the viewing port without disturbing the sample. A white light source shall be placed behind the sample so that the illumination is uniform throughout the sample. The test sequence as specified below shall be followed:

Step 1 - Prepare the spectacles in accordance with MIL-STD-810, General test performance guidance 5.2.

Step 2 - Lower the internal chamber temperature to the storage temperature of -51°C (-60°F) and maintain for a period of 24 hours after stabilization.
a. Photograph the sample after temperature stabilization.
b. Photograph sample at 2 hour intervals for the remainder of the 24 hour period.

Step 3 - Inspect the spectacles in accordance with MIL-STD-810, General test performance guidance 5.2.

Step 4 - Return spectacles to standard ambient conditions and stabilize. Photograph spectacles after temperature stabilization.

The spectacles shall pass the requirements of 3.4.4.3. Following the low temperature test, spectacles shall pass the requirements of 3.4.2 and 3.4.3.

4.6.4.5 Temperature shock. The spectacles shall be tested in accordance with MIL-STD-810, Method 503.3 and the procedure outlined below. The spectacles shall be placed in the test chamber ensuring that they are positioned so the entire front surface can be photographed from the viewing port without disturbing the sample. A white light source shall be positioned behind the sample so that the illumination is uniform throughout the sample. The test sequence as specified below shall be followed:

Step 1 - Prepare the spectacles in accordance with MIL-STD-810D, general test performance guidance 5.2.

Step 2 - Raise the internal chamber temperature to 66°C (151° F). Maintain for a period of not less than 4 hours.
a. Photograph the sample after temperature stabilization.
b. Photograph the sample at the end of 2 hours and at the end of 4 hours.

Step 3 - Transfer the sample within 5 minutes to a cold chamber with an internal temperature of -51°C (-60°F). Expose the sample to this temperature for a period of not less than 4 hours.
  a. Photograph sample within 5 min. of placement in cold chamber.
  b. Photograph sample at the end of 2 hours and at the end of 4 hours.

Step 4 - Return the sample within 5 minutes to the high temperature chamber. The sample shall be exposed to this temperature for a period of 4 hours.
  a. Photograph the sample as soon as it defrosts.
  b. Photograph the sample at the end of 2 hours and at the end of four hours.

Step 5 - Repeat step 3.

Step 6 - Repeat step 4.

Step 7 - Return sample to standard ambient conditions and stabilize.
  a. Photograph sample after temperature stabilization.

The spectacles shall pass the requirements of 3.4.4.4. Following the temperature shock test, the spectacles shall pass the requirements of 3.4.2 and 3.4.3.

4.6.4.6 Rain. The spectacles shall be tested in accordance with MIL-STD-810, method 506.3, Procedure II. The spectacles configuration is "unprotected". Position the sample in the test chamber so the entire front surface can be photographed from the viewing port without disturbing the sample. Place a white light source behind the sample so the illumination is uniform throughout. The test sequence as specified below shall be followed:

Step 1 - Prepare the spectacles in accordance with MIL-STD-810, general test performance guidance 5.2.

Step 2 - The water temperature shall be 25°±10°C (77°±18°F).

Step 3 - The spectacles shall be preheated to 10°C (17°F) higher than the water temperature.

Step 4 - The chamber temperature shall be uncontrolled except as regulated by the water temperature.

Step 5 - The entire outer surface of the lenses shall be exposed to the rain.

Step 6 - Photograph the sample prior to rain exposure.

Step 7 - Photograph the sample at the half-way point of the exposure time.

Step 8 - Expose the sample for two hours of rain.

Step 9 - Photograph the sample at the end of the test after the droplets have evaporated from the surface of the sample.

The spectacles shall pass the requirements of 3.4.4.5. Following the rain test, the spectacles shall pass the requirements of 3.4.2 and 3.4.3.

4.6.4.7 Humidity. The spectacles shall be tested in accordance with MIL-STD-810, Method 507.3, Procedure I. The spectacles shall be placed in the test chamber ensuring they are positioned so the entire front surface can be photographed from the viewing port without disturbing the sample. A white light source shall be placed behind the sample so the illumination is uniform throughout the sample. Ensure that the wiper on the viewing port adequately clears the surface to enable the quality of pictures required. The modified hot humid cycle listed in Table VI shall be used for testing with a test duration of 10 days (non-hazardous items). The relationship of temperature to relative humidity is shown in Figure 1. The points at which the sample will be photographed are indicated on the temperature function with a vertical line from the x axis. There are a total of 7 photographs per 24 hour period at key transition points. This schedule of photographs will result in a total of 70 pictures over the 10 day test period. Initially, the test will encompass 10 days, however, if the sample survives the initial 10 days, the test duration will be extended until either the sample fails or until a total of 60 days elapse. The test sequence as specified below shall be followed:

Step 1 - Prepare the spectacles in accordance with MIL-STD-810, general test performance guidance 5.2.

Step 2 - Place the spectacles in the chamber and stabilize the chamber to the first condition of Table VI. Photograph the sample after the temperature/humidity stabilization.

Step 3 - Following Table VI, the test shall be performed for 10 days. Photograph the sample at the points indicated on the temperature function, Figure 1 (1 through 7).

Step 4 - If the sample shows no deterioration after 10 days, continue the testing and the photographing until item failure or until 60 days of testing is complete.

The spectacles shall meet the requirements of 3.4.4.6. Following the humidity test, the spectacles shall pass the requirements of 3.4.2 and 3.4.3.

4.6.4.7.1 Adhesion of coating. Immediately upon completion of the humidity test and removal from the humidity chamber, the lenses shall be dried with a cotton cloth and then subjected to the adhesion test. A test tape, with an adhesion rating of 1.1 Kg per 25 mm of width, (40 ounces per inch of width) shall be firmly applied to the front surface of the lens. The area covered shall be 25 by 12.5 mm (1 inch by 1/2 inch). The tape is then removed using a snapping motion applied at 90 degrees to the surface of the lens. Two trials at separate locations shall be made using this method. The following 3M tapes are acceptable: 670 (preferred), 202, 218 and 232. The tested areas shall be closely examined. The spectacle shall pass the requirements of 3.4.4.6.1.

4.6.4.8 Salt fog resistance. The spectacles shall be tested in accordance with MIL-STD-810, Method 509.3 procedure I, configuration (3). The test sequence as outlined below shall be followed:

Step 1 - Prepare the spectacles in accordance with MIL-STD-810, general test performance guidance 5.2.

Step 2 - Adjust the test chamber temperature to 35°C (95°F) and photograph the sample.

Step 3 - After introduction of salt fog, at three hour intervals, the sample shall be removed from the chamber to allow photographs to be taken as expeditiously as possible. The sample shall be immediately returned to the chamber to continue the test. If any deterioration (cracks, etc.) appear, the photographs shall be taken at 1 hour intervals.

Step 4 - The sample shall be photographed at the end of the drying period.

The spectacles shall pass the requirements of 3.4.4.7 of this specification. Following the salt fog resistance test, the spectacles shall pass the requirements of 3.4.2 and 3.4.3.

4.6.5 Ballistic resistance. The ballistic test shall be conducted in accordance with MIL-STD-662 and using a caliber .22 T37 fragment simulating projectile. The spectacle lens shall be rigidly mounted with the area to be impacted normal to the line of fire. An aluminum foil witness sheet, 0.05 mm (0.002 inch) thick, shall be mounted 24 mm (.95 inches) behind the area of impact. One valid impact shall be made on each lens at optical center. An impact shall be considered valid only of it meets any of the following:

a. The impact velocity of the projectile is between 168 meters per second (550 feet per second) and 171 meters per second (560 feet per second).

b. The impact velocity of the projectile is less than 168 meters per second (550 feet per second) and the impacted lens fails to meet the requirements of 3.4.5.

c. The impact velocity of the projectile is more than 171 meters per second (560 feet per second) and the impacted lens meets the requirements of 3.4.5.

The lens containing the valid impact and the witness sheet shall be examined for conformance to the requirements of 3.4.5. Any penetration of the witness shall be considered evidence of spall.

4.6.6 Frame.

4.6.6.1 Corrosion resistance. When the spectacles are subjected to the salt fog test, (4.6.4.7), the frame shall meet the requirements of 3.4.6.1.

4.6.6.2 Heat resistance. When the spectacles are subjected to the temperature shock test, (4.6.4.4), the frame shall meet the requirements of 3.4.6.2.

4.6.6.3 Ductility. The temple of the spectacles shall be bent 45 degrees (once) over a 6 mm (0.25 inch) mandrel. The temple shall pass the requirements of 3.4.6.3.

4.6.6.4 Adhesion of plating. Adhesion of test articles shall be performed at room temperature by means of the following bend test. Plated temples shall be bent repeatedly through an angle of 180 degrees on a diameter equal to the thickness of the temple until fracture of the base metal occurs. No detachment of the coating shall be possible by probing with a sharp instrument. Cracks in the base metal or plating shall not be considered failure unless accompanied by flaking, peeling, or blistering. The temple shall pass the requirements of 3.4.6.4.

4.6.7 Crush resistance of carrying case. The carrying case with the spectacles inside, in the closed position, shall be placed on a flat surface. A force of 13.3 kilograms (29 pounds) shall then be applied over a circular area of 160 square millimeters (6 square inches) on the face of the closed case over the center of each lens. The carrying case shall pass the requirements specified in 3.4.7.

5. PACKAGING

5.1 Preservation. Preservation shall be level A or C as specified (see 6.2h).

5.1.1 Level A. Each pair of spectacles in its closed carrying case with paper printed with the caution notice (see 3.7.2) shall be packaged in accordance with MIL-P-116, Method IC-2. Each paperboard box shall snugly contain the spectacles (with case). The intent is to have a container that will afford the best protection possible to the spectacles.

5.1.2 Level C. Spectacles and case shall be packaged to afford adequate protection against physical damage during shipment from the supply source to the first receiving activity. The package and quantity per package shall be the same as that normally used by the contractor for retail distribution.

5.2 Packing. Packing shall be level A, B or C as specified (see 6.2h).

5.2.1 Level A. One hundred and forty-four pairs of spectacles with case, preserved-packaged as specified in 5.1, shall be packed in a fiberboard shipping container conforming to grade V2s, style RSC, of PPP-B-636. Spectacles, preserved-packaged level A, shall be packed flat four in length, six in width and six in depth within the shipping container. Inside dimensions of each shipping container shall approximate 640 mm (25-1/4 inches) in length, 420 mm (16-1/2 inches) in width and 250 mm (9-3/4 inches) in depth. Approximate dimensions are furnished as a guide only. Each shipping container shall be closed in accordance with method III as specified in the appendix to PPP-B-636.

5.2.2 Level B. One hundred and forty-four pairs of spectacles, preserved-packaged as specified in 5.1, shall be packed in a fiberboard shipping container conforming to style RSC, type CF, variety SW or SF, class domestic, grade 275 of PPP-B-636. Spectacles, preserved-packaged level B, shall be packed flat four in length, six in width and six in depth within the shipping container. Inside dimensions of each shipping container shall approximate 640 mm (25 inches) in length, 420 mm (16-1/2 inches) in width and 250 mm (9-3/4 inches) in depth. Approximate dimensions are furnished as a guide only. Each shipping container shall be closed in accordance with method II as specified in the appendix of PPP-B-636.

5.2.2.1 Weather-resistant shipping containers. When specified (see 6.2h), the fiberboard shipping container shall be a grade V3c, V3s or V4s fiberboard box fabricated in accordance with PPP-B-636 and closed in accordance with method III as specified in the appendix of the container specification.

5.2.3 Level C. Spectacles, preserved-packaged as specified (see 6.2h), shall be packed in a manner to ensure carrier acceptance and safe delivery at destination at the lowest transportation rate for such supplies. The quantity per shipping container shall be the same as that normally used by the contractor for retail distribution. Containers shall comply with U.S. Postal Service Manual for Laws and Regulations, Uniform Freight Classification, or National Motor Freight Classification, as applicable.

5.3 Marking. In addition to any special marking required by the contract or order, interior packages and shipping containers shall be marked in accordance with MIL-STD-129 and shall include the date of manufacture (month and year). Bar coding shall be applied in accordance with Appendix H of MIL-STD-129.

6. NOTES

(This section contains information of a general or explanatory nature that may be helpful, but is not mandatory.)

6.1 Intended use. The spectacles are for use by aircrew members for eye protection against exposure to multiple laser wavelengths.

6.2 Acquisition requirements. Acquisition documents must specify the following:

a. Title, number and date of this specification, including any amendments.

b. The applicable wavelengths and the required densities upon submission of a request accompanied by a secret clearance (see 3.4.3.1).

c. Issue of DODISS to be cited in the solicitation, and if required, the specific issue of individual documents referenced (see 2.1.1 and 2.2).

d. The number of items required for first article sample and if prescription spectacles are to be included (see 4.3.1).

e. Whether first article inspection is waived (see 4.3.1).

f. Name and address of the first article inspection laboratory (see 4.3.1) and the name of the Government activity responsible for conducting the first article inspection program (see 4.3.1.1) and the quality conformance verification inspection (see 4.5).

g. Whether certification of compliance is required (see 4.3.1.2).

h. Applicable levels of preservation, packaging, and packing (see 5); including marking requirements (see 5.3).

i. Items of data required (see 6.3).

6.3 Consideration of data requirements. The following data requirements should be considered when this specification is applied on a contract. The applicable Data Item Descriptions (DID's) should be reviewed in conjunction with the specific acquisition to ensure that only essential data are requested/provided and that the DID's are tailored to reflect the requirements of the specific acquisition. To ensure correct contractual application of the data requirements, a Contract Data Requirements List (DD Form 1423) must be prepared to obtain the data, except where DOD FAR Supplement 227.405-70 exempts the requirement for a DD Form 1423.

Reference Paragraph	DID Number	DID Title	Suggested Tailoring
4.3.1.1	DI-NDTI-80809A	Test/Inspection	Para 10.2.7.1
4.3.1.2	DI-E-2121	Certificate of compliance	Use contractor format

The above DID's were those cleared as of the date of this specification. The current issue of DOD 5010.12-L, Acquisition Management Systems and Data Requirements Control List (AMSDL), must be researched to ensure that only current, cleared DID's are cited on the DD Form 1423.

6.4 First article. When first article inspection is required, the contracting officer should provide specific guidance to offerors whether the item(s) should be a first article sample, a first production item, or a standard production item from the contractor's current inventory, and the number of items to be tested as specified in 4.3.1. The contracting officer should also include specific instructions in acquisition documents regarding arrangements for examinations, approval of first article test results, and disposition of first articles. Invitations for bids should provide that the Government reserves the right to waive the requirement for samples for first article inspection to those bidders offering a product which has been previously acquired or tested by the Government, and that bidders offering such products, who wish to rely on such production or test, must furnish evidence with the bid that prior Government approval is presently appropriate for the pending contract.

6.5 Subject term (key word) listing.

Ballistic protection
Eye protection
Laser eye protection (LEP)
Laser radiation
Lenses
Optical
Optical density
Spectacles, Aviators

6.6 Changes from previous issue. Marginal notations are not used in this revision to identify changes with respect to the previous issue due to the extent of the changes.

Custodians:
Army - GL
Air Force - 99

Preparing Activity
Navy-AS

(Project No. 8465-0163)

TABLE I. First article inspection.

Inspection	Requirement	Test method
Visual and dimensional examination	3.4.1	4.6.1
Matching	3.4.2.1	4.6.2.1
Vertical prismatic deviation	3.4.2.2.1	4.6.2.2.1
Horizontal prismatic deviation	3.4.2.2.2	4.6.2.2.2
Spherical and cylindrical power	3.4.2.3	4.6.2.3
Lens defects	3.4.2.4	4.6.2.4
Lens fit	3.4.2.5	4.6.2.5
Curvature	3.4.2.6	4.6.2.6
Optical density and angular protection	3.4.3.1	4.6.3.1
Transmittance	3.4.3.2	4.6.3.2
Near-infrared transmittance	3.4.3.3	4.6.3.3
Erythemal ultraviolet transmittance	3.4.3.4	4.6.3.4
Haze	3.4.3.5	4.6.3.5
Abrasion resistance	3.4.3.6	4.6.3.6
Solar radiation	3.4.4.1	4.6.4.1
Laser saturation	3.4.4.1	4.6.4.2
High temperature	3.4.4.2	4.6.4.3
Low temperature	3.4.4.3	4.6.4.4
Temperature shock	3.4.4.4	4.6.4.5
Rain	3.4.4.5	4.6.4.6
Humidity	3.4.4.6	4.6.4.7
Adhesion of coating	3.4.4.6.1	4.6.4.7.1
Salt fog resistance	3.4.4.7	4.6.4.8
Ballistic resistance	3.4.5	4.6.5
Corrosion resistance (frame)	3.4.6.1	4.6.6.1
Heat resistance (frame)	3.4.6.2	4.6.6.2
Ductility (frame)	3.4.6.3	4.6.6.3
Adhesion of plating (frame)	3.4.6.4	4.6.6.4
Crush resistance, carrying case	3.4.7	4.6.7

TABLE II. Quality conformance inspection.

Inspection	Method	Sampling size1/	Acceptance criteria 1/
Visual and Dimensional examination	4.6.1	a. Every spectacle for critical defects. b. Inspection Level II for minor defects.	a. Reject all units with any critical defect. b. An Acceptable Quality Level of 2.5 defects per 100 units for minor defects.
Matching	4.6.2.1	Inspection Level III 1/	Acceptance number zero, rejection number 1
Vertical prismatic deviation	4.6.2.2.1	Inspection Level III 1/	Acceptance number zero, rejection number 1
Horizontal prismatic deviation	4.6.2.2.2	Inspection Level III 1/	Acceptance number zero, rejection number 1
Spherical & cylindrical power	4.6.2.3	Inspection Level III 1/	Acceptance number zero, rejection number 1
Lens defects	4.6.2.4	Inspection Level III 1/	Acceptance number zero, rejection number 1
Lens fit	4.6.2.5	Inspection Level III 1/	Acceptance number zero, rejection number 1
Curvature	4.6.2.6	Inspection Level III 1/	Acceptance number zero, rejection number 1
Optical density & angular protection	4.6.3.1	Inspection Level III 1/	Acceptance number zero, rejection number 1
Transmittance	4.6.3.2	Inspection Level III 1/	Acceptance number zero, rejection number 1

or both sides of the seam are open

TABLE II. Quality conformance inspection - continued

Inspection	Method	Sampling size 1/	Acceptance criteria 1/
Near-infrared transmittance	4.6.3.3	Inspection Level III 1/	Acceptance number zero, rejection number 1
Erythemal ultraviolet transmittance	4.6.3.4	Inspection Level III 1/	Acceptance number zero, rejection number 1
Haze	4.6.3.5	Inspection Level III 1/	Acceptance number zero, rejection number 1
Packaging	4.6.1.1	Inspection Level II 1/	Total acceptable quality level of 2.5 defects per 100 units.

1/ The sample size shall be based only on the applicable sample size code letter corresponding to the specified inspection level of MIL-STD-105.

TABLE III. Classification of defects for visual and dimensional examination of the spectacles with case. 1/

Item	Defect	Major	Minor
Lens	Any imperfection in lens materials that adversely affects the protection levels and/or visual properties.	X	
	Imperfections that do not adversely affect the level of protection and/or the visual properties.		X
Frame	If required, identification or size information missing.	X	
	Cosmetic imperfections such as scratches in the finish that do not affect performance		X
Construction & Workmanship	Component missing or damaged. Any burr or sharp edge that may cause injury.	X	
	Any component not of the best quality, not of the proper size or lightest practical weight or suitable for the intended purpose.	X	
	Visible space between the lens and frame	X	
Carrying Case	Case missing.	X	
	Any component missing or damaged that would diminish protection to contents.	X	
	Cosmetic imperfections that do not affect protection to contents.		X
Marking			
Lens	Missing, misspelled, illegible, and/or incorrect.	X	
Frame	Missing, misspelled, illegible, and/or incorrect.	X	
Carrying Case	Missing, misspelled, illegible, and/or incorrect.	X	
Caution Notice	Missing - not included in carrying case.	X	
	Not worded as stated in paragraph 3.7.2.	X	

TABLE III. Classification of defects for visual and dimensional examination of the spectacles with case. 1/ - Continued

1/ Defect shall be classified as major when seriously affecting serviceability or appearance; otherwise, it is to be classified as a minor defect.

NOTE: Any defect determined to be minor based on the Table III classifications shall be subject to the Military Standard cited in the contract regarding disposition or acceptance of non-conforming materials.

TABLE IV. List of defects for packaging.

Item	Defect
Contents	More than one pair of spectacles in the same container.
Exterior and interior Marking	Missing, incomplete, incorrect, illegible; marking of improper size, location, sequence or method of application; exterior and interior marking different.
Packaging and packing Material	Inadequate application of the components material such as incomplete closure of unit pack, intermediate package, case liners, container flaps, loose strappings, etc; bulging or distortion of containers.
Weight or content	Number per container is more or less than required; gross or net weight exceeds the requirements.

Table V. Calculating photopic and scotopic transmittance.

Wavelength	Vλ	Vλ´	T	VλxT	Vλ´xT
380	.0000	.00059	.0000	.0000	.0000
385	.0001	.00111	.0000	.0000	.0000
390	.0001	.00221	.0000	.0000	.0000
395	.0002	.00453	.0000	.0000	.0000
400	.0004	.00929	.0000	.0000	.0000
405	.0006	.01850	.0000	.0000	.0000
410	.0012	.03484	.0000	.0000	.0000
415	.0022	.06040	.0000	.0000	.0000
420	.0040	.09660	.0000	.0000	.0000
425	.0073	.14360	.0000	.0000	.0000
430	.0116	.19980	.0000	.0000	.0000
435	.0168	.26250	.0000	.0000	.0000
440	.0230	.32810	.0000	.0000	.0000
445	.0298	.39310	.0000	.0000	.0000
450	.0380	.45500	.0000	.0000	.0000
455	.0480	.51290	.0000	.0000	.0000
460	.0600	.56720	.0000	.0000	.0000
465	.0739	.62050	.0000	.0000	.0000
470	.0910	.67560	.0000	.0000	.0000
475	.1126	.73370	.0000	.0000	.0000
480	.1390	.79300	.0000	.0000	.0000
485	.1693	.85090	.0001	.0000	.0001
490	.2080	.90430	.0000	.0000	.0000
495	.2586	.94910	.0000	.0000	.0000
500	.3230	.98170	.0000	.0000	.0000
505	.4073	.99840	.0000	.0000	.0000
510	.5030	.99660	.0000	.0000	.0000
515	.6082	.97500	.0000	.0000	.0000
520	.7100	.93520	.0000	.0000	.0000
525	.7932	.87960	.0000	.0000	.0000
530	.8620	.81100	.0000	.0000	.0000
535	.9149	.73320	.0004	.0004	.0003
540	.9540	.64970	.0037	.0035	.0024
545	.9803	.56440	.0221	.0217	.0125
550	.9950	.48080	.0710	.0706	.0341
555	1.0002	.40150	.1437	.1437	.0577
560	.9950	.32880	.2129	.2118	.0700
565	.9786	.26390	.2608	.2552	.0688
570	.9520	.20760	.2889	.2750	.0600
575	.9154	.16020	.3014	.2759	.0483
580	.8700	.12120	.3016	.2624	.0366
585	.8163	.08990	.2915	.2380	.0262
590	.7570	.06550	.2763	.2092	.0181
595	.6949	.04690	.2596	.1804	.0122
600	.6310	.03325	.2384	.1504	.0079
605	.5668	.02312	.2118	.1200	.0049
610	.5030	.01593	.1775	.0893	.0028
615	.4412	.01088	.1394	.0615	.0015
620	.3810	.00737	.1055	.0402	.0008

Table V. Calculating photopic and scotopic transmittance.

Wavelength	Vλ	Vλ´	T	VλxT	Vλ´xT
625	.3210	.00497	**.0822**	.0264	.0004
630	.2650	.00334	**.0677**	.0179	.0002
635	.2170	.00224	**.0577**	.0125	.0001
640	.1750	.00150	**.0492**	.0086	.0001
645	.1382	.00101	**.0416**	.0057	.0000
650	.1070	.00068	**.0347**	.0037	.0000
655	.0816	.00046	**.0278**	.0023	.0000
660	.0610	.00031	**.0207**	.0013	.0000
665	.0446	.00021	**.0141**	.0006	.0000
670	.0320	.00015	**.0083**	.0003	.0000
675	.0232	.00010	**.0039**	.0001	.0000
680	.0170	.00007	**.0015**	.0000	.0000
685	.0119	.00005	**.0005**	.0000	.0000
690	.0082	.00004	**.0002**	.0000	.0000
695	.0057	.00003	**.0001**	.0000	.0000
700	.0041	.00002	**.0000**	.0000	.0000
705	.0029	.00001	**.0000**	.0000	.0000
710	.0021	.00000	**.0000**	.0000	.0000
715	.0015	.00000	**.0000**	.0000	.0000
720	.0010	.00000	**.0000**	.0000	.0000
725	.0007	.00000	**.0000**	.0000	.0000
730	.0005	.00000	**.0000**	.0000	.0000
735	.0004	.00000	**.0000**	.0000	.0000
740	.0003	.00000	**.0000**	.0000	.0000
745	.0002	.00000	**.0000**	.0000	.0000
750	.0001	.00000	**.0001**	.0000	.0000
755	.0001	.00000	**.0000**	.0000	.0000
760	.0001	.00000	**.0001**	.0000	.0000
Totals:	21.3714	19.4142		2.6886	.4659

NOTE: The numbers in bold type shall be replaced by measurements made on the device under test.

The example is for a multiple-wavelength laser protection.

Symbols Vλ = Photopic relative luminosity (CIE 1924 standard)
Vλ´ = Scotopic relative luminosity (CIE 1924 standard)
T = Transmittance of device under test (bold type)
T_p = Percent photopic transmittance
T_s = Percent scotopic transmittance

Example: 1) Multiply Vλ by T at each wavelength.
2) Multiply Vλ´ by T at each wavelength.
3) Obtain separate totals for the numbers in VλxT, Vλ , Vλ´xT and Vλ´ columns.
4) Sum of VλxT divided by sum of Vλ is the photopic transmittance. Multiply this by 100 to get percent: T_p = 2.69/21.3 x 100 = 12.6%
5) Sum of Vλ´xT divided by Vλ´ is the scotopic transmittance. Multiply this 100 to get percent: T_s = .466/19.41 x 100 = 2.4.%

TABLE VI. Modified hot humid cycle. 1/

Time	Temp (F)	Temp (C)	RH (%)
0000	88	31	100
0100	88	31	100
0200	88	31	100
0300	88	31	100
0400	88	31	100
0500	88	31	100
0600	90	32	100
0700	93	34	94
0800	96	36	88
0900	98	37	82
1000	100	38	79
1100	102	39	77
1200	104	40	75
1300	105	41	74
1400	105	41	74
1500	105	41	74
1600	105	41	76
1700	102	39	79
1800	99	37	82
1900	97	36	82
2000	94	34	91
2100	91	33	95
2200	90	32	96
2300	89	32	100
2400	88	31	100

Modified from Table 507.2-I of MIL-STD-810D, 31 July 1986

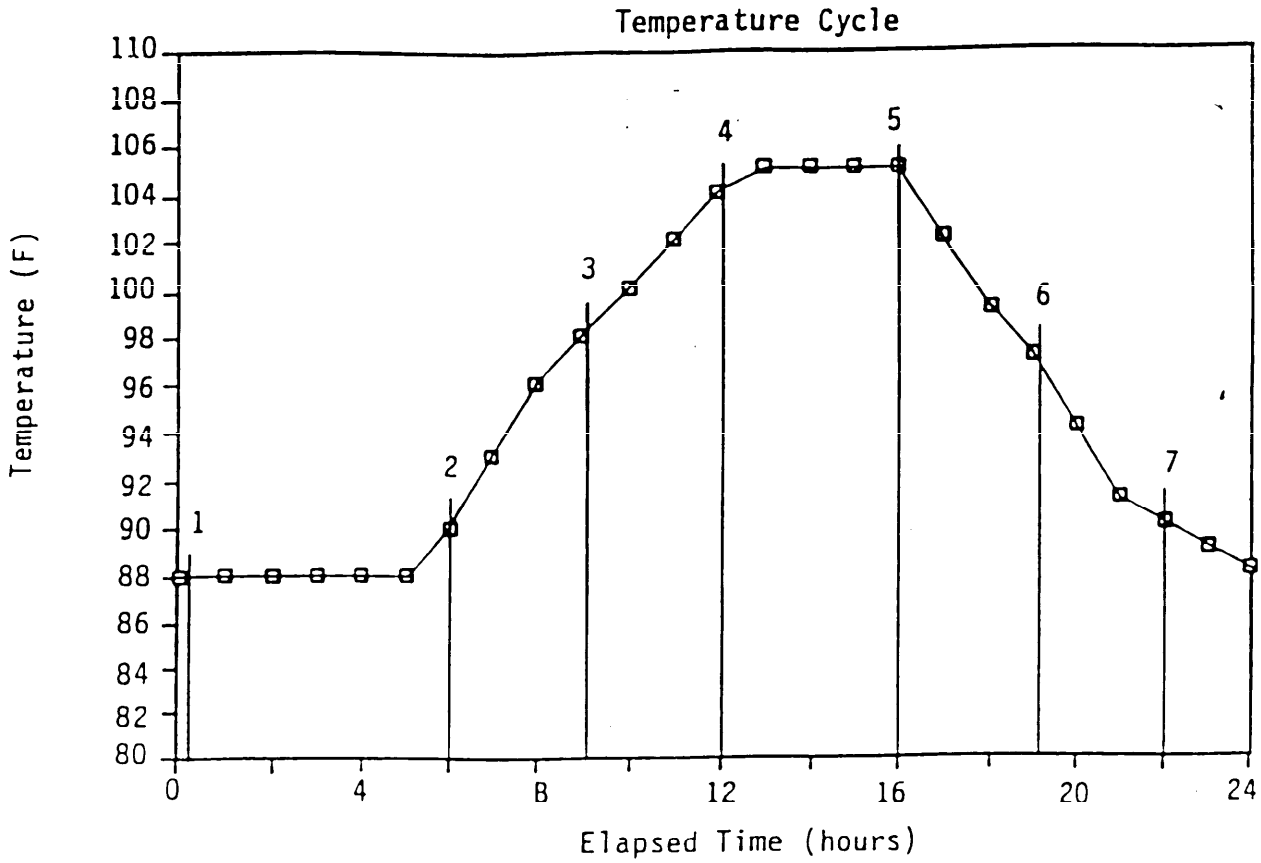

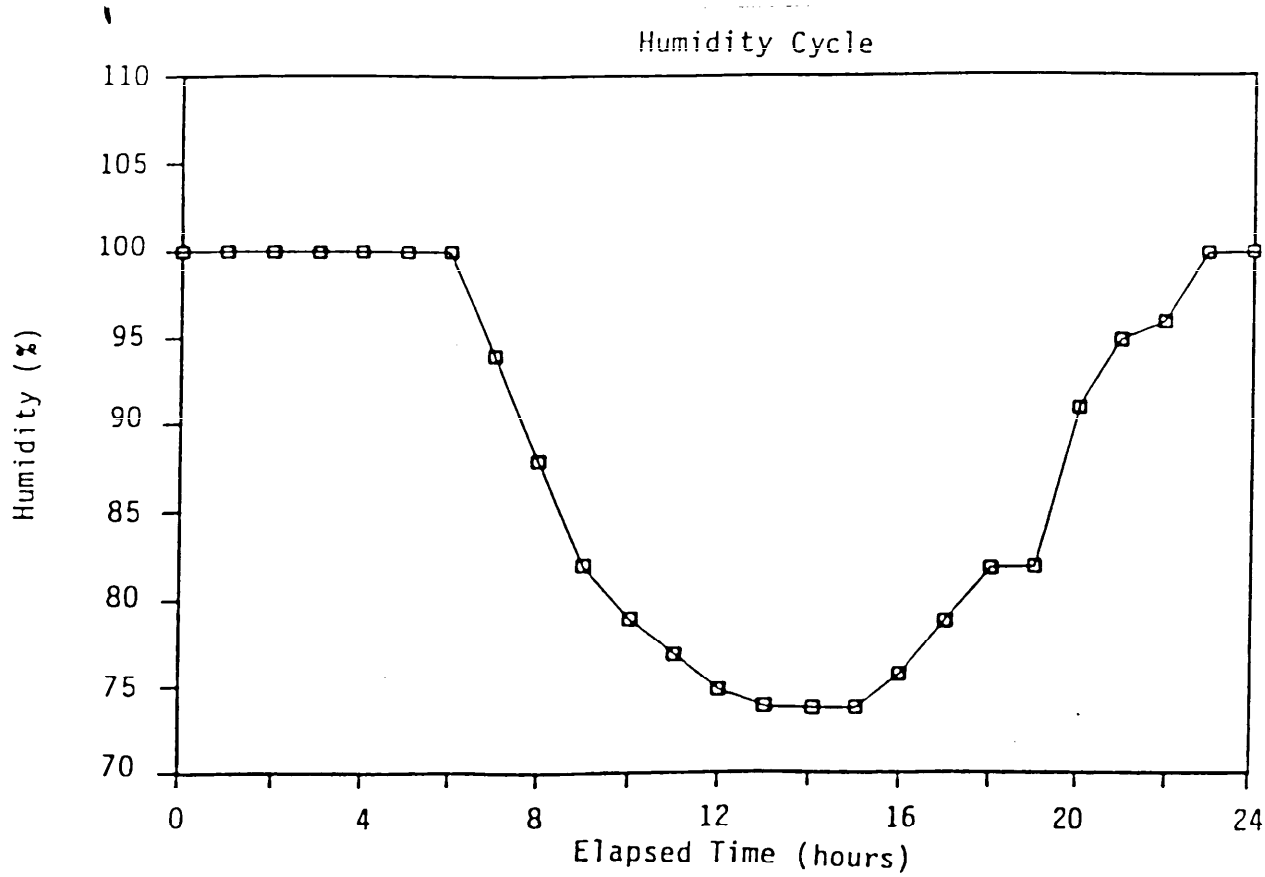

FIGURE 1. Modified hot humid cycle.

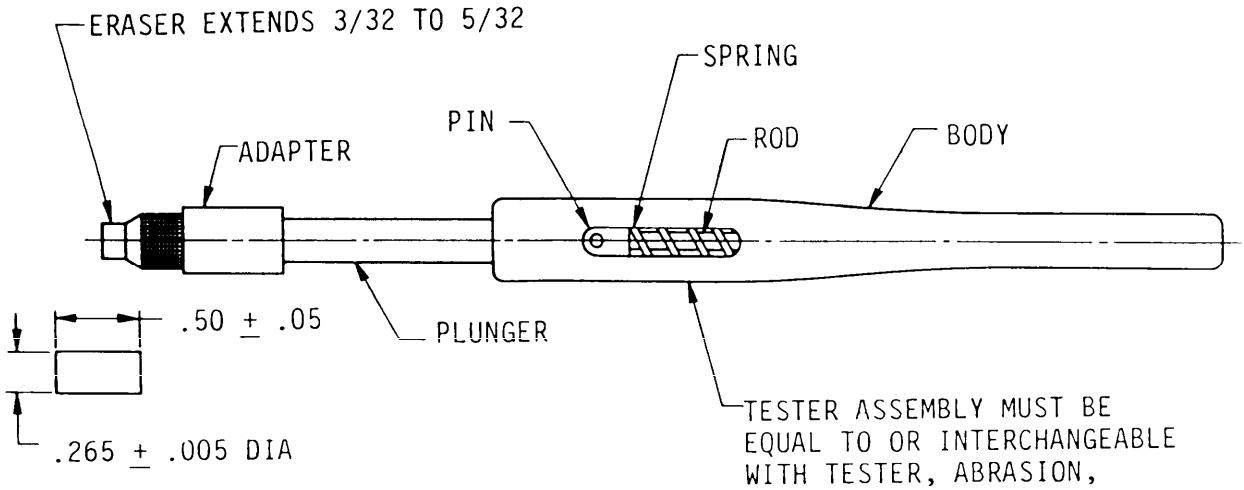

ERASER PLUG PER
MIL-E-12397

SUGGESTED SOURCE:
SUMMERS LAB INC.
BOX 162
FORT WASHINGTON, PA 19034

DIMENSION IN INCHES.

FIGURE 2. Eraser abrasion tester assembly and eraser plug.

STANDARDIZATION DOCUMENT IMPROVEMENT PROPOSAL

INSTRUCTIONS

1. The preparing activity must complete blocks 1, 2, 3, and 8. In block 1, both the document number and revision letter should be given.
2. The submitter of this form must complete blocks 4, 5, 6, and 7.
3. The preparing activity must provide a reply within 30 days from receipt of the form.

NOTE: This form may not be used to request copies of documents, nor to request waivers, or clarification of requirements on current contracts. Comments submitted on this form do not constitute or imply authorization to waive any portion of the referenced document(s) or to amend contractual requirements.

I RECOMMEND A CHANGE:	1. DOCUMENT NUMBER	2. DOCUMENT DATE (*YYMMDD*)
	MIL-S-29580B	931216

3. DOCUMENT TITLE

SPECTACLES, AVIATOR'S,MULTIPLE WAVE LENGTH LASER PROTECTIVE, EDU-5/P (WITH CASE)

4. NATURE OF CHANGE (*Identify paragraph number and include proposed rewrite, if possible. Attach extra sheets as needed.*)

5. REASON FOR RECOMMENDATION

6. SUBMITTER

a. NAME (*Last, First, Middle Initial*)	b. ORGANIZATION	
c. ADDRESS (*Include Zip Code*)	d. TELEPHONE (*Include Area Code*) (1) Commercial: (2) AUTOVON: (*If Applicable*)	7. DATE SUBMITTED (*YYMMDD*)

8. PREPARING ACTIVITY

a. NAME	b. TELEPHONE NUMBER (*Include Area Code*)	
COMMANDING OFFICER, NAVAL AIR WARFARE CENTER AIRCRAFT DIVISION LAKEHURST SYSTEMS REQUIREMENTS DEPARTMENT	(1) Commercial (908) 323-7488	(2) AUTOVON 624-7488
c. ADDRESS (*Include Zip Code*) CODE SR3 LAKEHURST, NJ 08733-5100	**IF YOU DO NOT RECEIVE A REPLY WITHIN 45 DAYS, CONTACT:** Defense Quality and Standardization Office, 5203 Leesburg Pike, Suite 1403, Falls Church, VA 22041-3466 Telephone (703) 756-2340 AUTOVON 289-2340	