Downloaded from http://www.everyspec.com

INCH-POUND

MIL-R-8236F
24 September 1993
SUPERSEDING
MIL-R-8236E
13 NOVEMBER 1986

MILITARY SPECIFICATION

REEL, SHOULDER HARNESS, INERTIA LOCK

This specification is approved for use by all Departments and Agencies of the Department of Defense.

1. SCOPE

1.1 Scope. This specification establishes the dynamic and static performance criteria and testing requirements for 6 types of shoulder harness inertia reels and subassemblies thereof, for military aircraft.

1.2 Classification. Inertia reels shall be of the following types and they are designated as flight critical components/subassemblies (see 6.4.7):

MA-1	Unidirectional (see 6.4.12 and Figure 1)
MA-2	Multidirectional (see 6.4.10 and Figure 2)
MA-6	Multidirectional (see 6.4.10 and Figure 3)
MA-8	Multidirectional (see 6.4.10 and Figure 3)
MA-14	Omnidirectional (see 6.4.11 and Figure 3)
MA-16	Omnidirectional (see 6.4.11 and Figure 3)

2. APPLICABLE DOCUMENTS

2.1 Government documents.

2.1.1 Specifications, standards and handbooks. The following specifications, standards, and handbooks form a part of this specification to the extent specified herein. Unless otherwise specified, the issues of these documents shall be those listed in the issue of the Department of Defense Index of Specifications and Standards (DODISS) and supplement thereto, cited in the solicitation.

SPECIFICATIONS

FEDERAL

PPP-B-566	Boxes, Folding, Paperboard
PPP-B-601	Boxes, Wood, Cleated-Plywood
PPP-B-636	Boxes, Shipping, Fiberboard
PPP-B-676	Boxes, Set-Up

Beneficial comments (recommendations, additions, deletions) and any pertinent data that may be of use in improving this document should be addressed to: The Resources and Logistics Services, SA-ALC/TILDM, Kelly AFB TX 78241-5000 by using the self-addressed Standardization Document Improvement Proposal (DD Form 1426) appearing at the end of this document or by letter.

AMSC N/A FSC 1680

DISTRIBUTION STATEMENT A. Approved for public release; distribution is unlimited.

Downloaded from http://www.everyspec.com

MILITARY

MIL-P-116	Preservation, Methods of
MIL-S-5002	Surface Treatments and Inorganic Coatings For Metal Surfaces of Weapons Systems
MIL-F-7179	Finishes, Coatings, and Sealants For The Protection of Aerospace Weapons Systems
MIL-S-7742	Screw Threads, Standard, Optimum Selected Series: General Specification For
MIL-C-7958	Controls, Push-Pull Flexible and Rigid
MIL-A-8625	Anodic Coatings, For Aluminum And Aluminum Alloys
MIL-Q-9858	Quality Program Requirements
MIL-F-18264	Finishes: Organic, Weapons System, Application And Control of
MIL-W-25361	Webbing. Textile, Polyester, Low Elongation
MIL-I-45208	Inspection System Requirements
MIL-S-58095	Seat System: Crash-Resistant Non-Ejection, Aircrew, General Specification For
MIL-S-81771	Seat System; Aircrew Crash Resistant, General Specification For
MIL-W-83420	Wire Rope, Flexible, For Aircraft Control
MIL-C-83488	Coating. Aluminum. Ion Vapor Deposited

STANDARDS

FEDERAL

FED-STD-595	Colors Used in Government Procurement

MILITARY

MIL-STD-129	Marking For Shipment Ana Storage
MIL-STD-130	identification Marking of U.S. Military Property
MIL-STD-810	Environmental Test Methods And Engineering Guidelines
MIL-STD-831	Reports Test, Preparation of
MIL-STD-889	Dissimilar Metals
MIL-STD-970	Standards Arid Specifications. Order of Preference For The Selection of

HANDBOOKS

MILITARY

MIL-HDBK-132	Protective Finishes For Metal And Wood Surfaces
MTL-HDBK-275	Guide for Selection of Lubricant Fluids and Compounds for Use in Flight Vehicles and Components

(Unless otherwise indicated, copies of federal and military specifications, standards and handbooks are available from the Standardization Documents Order Desk, Building 4D, 700 Robbins Ave, Philadelphia, PA 19111-5094)

2.2 Non-Government publication. The following document forms a part of this document to the extent specified herein. Unless otherwise specified. the issues of the documents which are DOD adopted are those listed in the issue of the DODISS cited in the solicitation. Unless othewise specified. the issues of documents not listed in the DODISS are the issues of (he documents cited in the solicitation (see 6.2).

Downloaded from http://www.everyspec.com

AMERICAN SOCIETY FOR TESTING AND MATERIALS (ASTM)

ASTM D-3951-90 Packaging, Commercial

(Application for copies of ASTM publications should be addressed to the American Society for Testing and Materials, 1916 Race Street, Philadelphia, PA 19103.)

SOCIETY OF AUTOMOTIVE ENGINEERS, INC.
(AEROSPACE MATERIAL SPECIFICATIONS)

1979 SAE Handbook Part 2, Recommended Practice, Section J211b, Instrumentation for Impact Test

(Application for copies should be addressed to the Society of Automotive Engineers, Inc., 400 Commonwealth Drive, Warrendale, Pa., 15096.)

(Non-Government standards and other publications are normally available from the organizations that prepare or distribute the documents. These documents also may be available in or through libraries or other informational services.

2.3 Order of precedence. In the event of a conflict between the text of this specification and the references cited herein (except for related associated detail or MS standards), the text of this specification takes precedence. Nothing in this specification, however, supersedes applicable laws and regulations unless a specific exemption has been obtained.

3. REQUIREMENTS

3.1 Qualification. The inertia reels and their subassemblies furnished under this specification shall be products which are authorized by the qualifying activity for listing on the applicable Qualified Products List (QPL) at the time of award of contract (see 4.2.1. and 6.5).

3.2. Specific aircraft applications. The inertia reel shall be installed in the applicable aircraft seat system and shall be compatible with seat interface and seat performance requirements (see 6.1.1 and 6.1.1.1).

3.3 Materials. The inertia reel materials shall withstand prolonged exposure to temperature extremes, humidity, fungus, sand, dust, salt fog (including effects with stack gases), acceleration, vibration, or other aspects of the environment without degradation. Materials used shall not be nutrients for fungi.

3.3.1 Metals. Metals utilized shall be corrosion-resistant or suitably treated to withstand the environmental conditions specified in 3.3. Unless suitably protected against electrolytic corrosion, dissimilar metals, as defined in MIL-STD-889, shall not be used in intimate contact with each other (see 4.3.1).

3.3.1.1 Corrosion protection. Corrosion protection practices employed in manufacturing the inertia reel and its components shall be in accordance with MIL-STD-889 for dissimilar metals and with MIL-F-7179 (exterior surfaces) for parts and surfaces of assemblies (see 4.3.1.1).

3.3.1.2 Finishes. Protective coatings and finishes shall not crack, chip, or scale during normal service use or when subjected to the general service environmental conditions specified (see 4.5.). Surface treatments and inorganic coatings for metal surfaces shall be applied in accordance with MIL-S-5002. Application and control of organic finishes shall be in accordance with MIL-F- 18264 and MIL-HDBK-132. Unless otherwise specified, all exterior surfaces of the inertia reel shall be lusterless black # 37038 in accordance with FED-STD-595.

Downloaded from http://www.everyspec.com

3.3.1.3 Plating Steel parts in contact with aluminum or aluminum alloy shall be coated with aluminum by ion vapor deposition in accordance with MIL-C-83488, Type II. Class I (see 4.3.1.3).

3.3.1.4 Anodizing. All aluminum and aluminum alloy parts not subject to severe wear shall be anodizd where applicable, in accordance with Type II of MIL-A-8625. All aluminum and aluminum alloy parts subject to severe wear shall be anodized in accordance with Type II of MIL-A-8625. Severe wear is defined as wear which results in inertia reel performance degradation below performance levels specified (see 4.3.1.4).

3.3.2 Screw threads. Screw threads shall conform to MIL-S-7742. All internal or external parts that are threaded shall be positively locked (see 4.3.2).

3.4 Design and construction. The inertia reel shall withstand the strains, jars, vibrations, and other conditions incident to shipping, storage, installation, and the operational service environment. Pivots, bearings, and gears shall not bind, shake, or degrade inertia reel performance during normal operational use. Maintenance assembly and disassembly for replacement of the webbing or cable and the control handle and cable assembly shall not require special tools.

3.4.1 Standard Parts. AN or MS standard parts shall be used whenever they are suitable for the purpose and shall be identified on the drawings by their part numbers (see 4.4.1). Government Qualifying Activity approval of the use of non-standard parts shall be required prior to their use. Electrical parts, if used, shall be Military Specification components.

3.4.2 Parts interchangeability. AH parts having the same manufacturer's part number shall be directly and completely interchangeable with respect to installation and performance (see 4.4.2).

3.4.3 Subassemblies. The MA- 1 and MA-2 type inertia reel assemblies shall consist of. and be available as, 3 subassemblies:

a. Inertia reel housing with its internal mechanism(s), sensing device(s), and integrated shoulder harness cable.

b. Manual control handle. with attaching hardware.

c. Manual control cable.

The MA-6, MA-8, MA-14, and MA-16 type inertia reel assemblies shall consist of, and be available as, 4 subassemblies:

a. Inertia reel housing with its internal mechanism(s), sensing device(s), and integrated cable or means for accepting and accommodating a webbing lead-in strap or integrated restraint harness lead-in strap, including webbing keeper

b. Webbing lead-in strap with harness attachment, when applicable.

c. Manual control handle, with attaching hardware.

d. Manual control cable.

Figure 4 depicts representative MA-6, MA-8, MA-14, and MA-16 type inertia reels.

3.4.3.1 Inertia reel housing subassembly. The inertia reel housing subassembly, which encloses the cable drum or webbing spool, shall have provisions for calibration of the internal mechanism. Access for calibration shall be gained using common hand tools in a maximum of 5 minutes (see 4.4.3.1).

Downloaded from http://www.everyspec.com

3.4.3.1.1 Inertia reel locking mechanism actuation.

3.4.3.1.1.1 Inertia reel locking mechanism actuation (MA-1 type inertia reel). The MA-1 type inertia reel lock/unlock mechanism shall be fully and completely activated by a throw (stroke) of 1.21 $\pm$0.03 inches delivered by the moveable element of the MA-1 manual control cable subassembly (see 4.4.3.1.1.1).

3.4.3.1.1.2 Inertia reel locking mechanism actuation (MA-2 type inertia reel). The MA-2 type inertia reel lock/unlock mechanism shall be fully and completely activated by a throw (stroke) of 0.38 $\pm$0.03 inches delivered by the moveable element of the MA-2 manual control cable subassembly (see 4.4.3.1.1.2).

3.4.3.1.1.3 Inertia reel locking mechanism actuation (MA-6, MA- 8, MA-14, and MA-16 type inertia reels). The MA-6, MA-8, MA-14, and MA-16 type inertia reel lock/unlock mechanisms shall be fully and completely activated by a throw (stroke) of 0.68 $^{+0.03}_{-0.08}$ inches delivered by the moveable element of the MA-6, MA-8, MA-14, and MA-16 type manual control cable subassemblies (see 4.4.3.1.1.3).

3.4.3.1.2 Inertia reel housing subassembly interchangeability. The inertia reel housing subassembly shall be capable of being mated with all QPL webbing lead-in strap subassemblies, restraint harness assemblies, all QPL manual control cable subassemblies and all QPL manual control handle subassemblies without performance degradation below the performance levels specified (see 3.5).

3.4.3.1.3 Inertia reel housing subassembly shoulder harness attachment cable (MA-1 and MA-2 type inertia reels). For inertia reels of these types, the shoulder harness attachment cable shall conform to MIL-W-83420, and shall be securely attached to the cable drum. A swaged-type clevis end fitting for the MA-1 type inertia reel, as depicted in Figure 5, and for the MA-2 type inertia reel, as depicted in Figure 6, shall be provided for attachment to the harness. The cable shall be protected at the point of attachment to prevent damage by snagging or rubbing. Dimension "A" on Figures 1 and 2 shall be as specified in acquisition requirements (see 6.2.1 (c)). On all inertia reels where the "A" dimension is more than 0.0 inch, a permanent stop shall prevent the inertia reel from retracting more than 18 inches of cable from the fully extended position. A durable dust cover and guide shall be provided for the shoulder harness cable (see 4.4.3.1.3).

3.4.3.1.4 Inertia reel drum/spool capacity. The MA-1 and MA-2 type inertia reel drums shall be capable of accepting a minimum of 18 inches of shoulder harness attachment cable within the inertia reel housing without binding . The MA-6 and MA-8 type inertia reel spools shall be capable of accepting a minimum of 18 inches of standard shoulder harness attachment webbing within the inertia reel housing without binding. The MA-14 and MA-16 type inertia reel spools shall be capable of accepting a minimum of 24 inches of standard shoulder harness attachment webbing within the inertia reel housing without binding (see 4.4.3.1.4).

3.4.3.1.5 Inertia reel housing subassembly adjustability. For MA-6, MA-8, MA-14, and MA-16 type inertia reels, the inertia reel housing subassembly control head shall be capable of being rotated within the plane perpendicular to the take-up spool axis of rotation with a minimum of 12 uniformly spaced adjustments with one on each cardinal point without degrading the capability of the manual control handle/manual control cable subassemblies to actuate the inertia reel lock. Additional adjustments need not be uniformly spaced (see 4.4.3.1.5).

3.4.3.2 Shoulder harness attachment webbing subassembly.

3.4.3.2.1 Shoulder harness attachment webbing (MA-6, MA-8, MA- 14, and MA-16 type inertia reels). For inertia reels of these types, the shoulder harness attachment webbing shall consist of either a webbing lead-in strap subassembly, as detailed herein, or an integrated restraint harness assembly lead-in strap. The integrated restraint harness assembly shall comply with the applicable seat system/restraint system requirements and drawings. For the webbing lead-in strap subassembly, the webbing shall conform to MIL-W-25361, Type IV, except that the width shall be 1.75 $\pm$ 0.0625 inches, the thickness shall be 0.055 to 0.075 inches, and the minimum breaking strength shall be 8,000 pounds. The webbing lead-in strap shall have a fitting, as depicted in Figure 7, for attachment to the harness. The webbing shall be securely attached to the spool with an appropriate end fitting to

Downloaded from http://www.everyspec.com

spool retainer in such a manner that field replacement can be made without disassembly of the inertia reel. Slot and retainers must meet all strength requirements, both at maximum and minimum dimensions of the webbing end fitting. An end fitting in accordance with Figure 8 shall be provided for attachment to the inertia reel spool. The webbing shall be protected at the point of attachment to prevent damage by snagging or rubbing. Dimension "A" on Figure 3 shall be as specified in the acquisition requirements (see 6.2.1(c)). Total webbing length is the standard length plus dimension "A" (see 4.4.3.2.1).

3.4.3.2.1.1 Webbing lead-in strap subassembly standard length (MA-6, MA-8, MA-14, and MA-16 type inertia reels). For inertia reels of the MA-6 and MA-8 types. the standard length of the webbing lead-in strap subassembly shall be 18 inches of 0.070 to 0.075 inch thick lead-in webbing. For testing purposes, the webbing lead-in strap subassembly shall be 24 inches. For inertia reds of the MA-14 and MA-16 types, the standard length of the webbing lead-in strap subassembly shall be 24 inches of 0.070 to 0.075 inch thick lead-in webbing. For testing purposes. the webbing lead-in strap shall be 30 inches. The webbing lead-in straps shall have a fitting, as depicted in Figure 8 (see 4.4.3.2.1. 1).

3.4.3.2.1.2 Webbing lead-in strap subassembly interchangeability (MA-6, MA-8, MA-14, and MA-16 type inertia reels). For inertia reels of the MA-6, MA-8, MA-14, and MA-16 types, the inertia reel spool shall be capable of accepting all same type QPL webbing lead-in strap subassemblies and perform in accordance with the proof and ultimate load requirements specified (see 3.5.4, 3.5.4.1, 3.5.4.2) as a separate subassembly.

3.4.3.2.1.3 Webbing lead-in strap Subassembly design requirements. The webbing lead-in subassembly shall meet the following design requirements:

a. Dimensions (see Figures 3.7 and 8.3.4.3.2).

b. Materials (see 3.3).

c. Design and construction (see Figure 4, 3.4).

d. Environmental (see 3.5.5).

e. interchangeability (see 3.4.3.2.1.2).

f. Design static strength (see 3.5.7).

3.4.3.2.1.4 Integrated restraint harness assemblies. The spool of the MA-6, MA-8, MA-14, and MA-16 type inertia reds shall be capable of accepting and retaining the lead-in webbing of applicable integrated restraint harness assemblies with an appropriate end fitting to spool retainer. Slot and retainers must meet all strength requirements, both at maximum and minimum dimensions of the webbing end fitting. Interchangeability of the integrated restraint harness assembly shall be demonstrated during service installation verification prior to approval for QPL.

3.4.3.3 Manual control handle subassembly operational requirements. An external manual control handle subassembly shall be provided for manual operation. The structural load bearing pieces of the handle subassembly shall be capable of accepting without performance degradation the loads generated by usage, being stepped upon, and other cockpit abuses. The control handle shall have 2 distinct positions, "auto-lock" and "manual-lock". Means shall be provided for retaining the control handle at either selected position. When the control handle is mounted on the seat, locking of the cable drum or spool shall be effected by moving the control handle forward to the "manual- lock" position. Unlocking the drum or spool shall be effected by moving the control handle rearward to the "auto-lock" position. The control handle shall be capable of unlocking (ratcheting is acceptable) the inertia reel while a load of 25 pounds is sensed at any webbing or cable extension length. The manual control handle shall be provided with two No. 10 (0.193 inch diameter) bolt holes for attachment to the seat as detailed in Figures 9 through 11 for each type of inertia reel application. The control handle shall connect to the inertia reel via a flexible push-pull cable (see 3.4.3.4). The static force required to move the control handle from each of its 2

Downloaded from http://www.everyspec.com

functional positions to the opposite position shall be 10 ±5 pounds while a 25 pound load is concurrently applied and sensed through the inertia reel cable/webbing when the handle is being moved from the "manual-locked" position to the "auto-locked" position. The control handle shall properly switch the inertia reel between "auto-lock" and "manual-lock" modes when the handle actuation time is 0.125 seconds or longer (see 4.4.3.3).

3.4.3.3.1 Manual control handle subassembly interchangeability.

3.4.3.3.1.1 Manual control handle subassembly (MA-1 type inertia reel) interchangeability. The manual control handle subassembly for the MA-1 type inertia reel shall conform to the dimensions of Figure 9 and shall be interchangeable without modification with all QPL MA-1 type inertia reel control handles with no peformamce degradation below the performance levels specified (see 3.4.3.3.3).

3.4.3.3.1.2 Manual control handle subassembly (MA-2 type inertia reel) interchangeability. The manual control handle subassembly for the MA-2 type inertia reel shall conform to the dimensions of Figure 10 and shall be interchangeable without modification with all QPL MA-2 type inertia reel control handles with no performance degradation below the performance levels specified (see 3.4.3.3.3).

3.4.3.3.1.3 Manual control handle subassembly (MA-6. MA-8. MA- 14. and MA-16 type inertia reels) interchangeability. The manual control handle subassembly for the MA-6, MA-8. MA-14 and MA-16 type inertia reels shall conform to the dimensions of Figure 11 and shall be interchangcable without modification with all QPL MA-6, MA-8, MA-14, and MA-16 type inertia reel control handles with no performance degradation below the performance levels specified (see 3.4.3.3.3).

3.4.3.3.2 Manual control handle subassembly throw.

3.4.3.3.2.1 Manual control handle subassembly (MA-1 type inertia reel) throw. The MA-1 manual control handle subassembly shall be have a 60° ±5° angle throw which shall produce a manual control cable throw brake) of 1.21 ±0.03 inches for the MA-1 type manual control cable subassembly (see 4.4.3.3.2.1).

3.4.3.3.2.2 Manual control handle subassembly (MA-2 type inertia reel) throw. The MA-2 manual control handle subassembly shall be have a 50° ±10° angle throw which shall produce a manual control cable throw (stroke) of 0.38 ±0.03 inches for the MA-2 type manual control cable subassembly (see 4.4.3.3.2.2).

3.4.3.3.2.3 Manual control handle subassembly (MA-6. MA-8, MA-14. and MA-16 type inertia reel) throw. The manual control handle subassembly of these rypes of inertia reds shall be have a $50° \frac{+15°}{-10°}$ angle throw which shall produce a manual control cable throw (stroke) of $0.68 \frac{+0.03}{-0.08}$ inches for the MA-6, MA-8, MA-14, and MA-16 type manual control cable subassemblies (see 4.4.3.3.2.3).

3.4.3.3.3 Manual control handle Subassembly perforrnance requirements. The manual control handle subassembly shall meet the material, design, and performance requirements:

a. Dimensions (see Figures 9-11).

b. Materials (see 3.3).

c. Design and construction (see 3.4).

d. Manual control handle subassembly opeational requirements (see 3.4.3.3).

e. Interchangeability (see 3.4.3.3.1).

Downloaded from http://www.everyspec.com

f. Throw angle (see 3.4.3.3.2).

g. Weight (see 3.4.5.6).

h. Environmental (see 3.5.5).

i. Life cycle (see 3.5.6.3).

j. Lubrication (see 3.6)

k. Workmanship (see 3.8).

3.4.3.4 Manual control cable subassembly design requirements. The manual control cable subassembly which transmits the manuall control handle motions to iertia reel locking mechanism shall be a push-pull control cable complying with the rcquirements of MIL-C-7958. Type I (see 4.4.3.4).

3.4.3.4.1 Manual control cable subassembly Performance.

3.4.3.4.1.1 Manual control cable subassembly (MA-1 type inertia reel) throw (stroke). The throw (stroke) of the moveable element of the MA-1 type manual control cable subassembly shall be 1.21 ±0.03 inches, as depicted in Figure 12. The manual control cable subassembly shall be capable of performing satisfactorily irrespective of which end is connected to the inertia reel or manual control handle subassembly (see 4.4.3.4.1.1).

3.4.3.4.1.2 Manual control cable subassembly (MA-2 typeinertia reel) throw (stroke). Both, terminal ends of the moveable element shall conform to Figures 13 through 15 and the throw (stroke) of the moveable element of the MA-2 type manual control mbit subassemblies shall be 0.38 ±0.03 inches. The flexible tubular casing shall be terminated with end fittings and threaded attachment nuts conforming to Figure 15. The manual control cable subassembly shall be capable of performing satisfactorily irrespective of which end is connected to the inertia reel or manual control handle subassembly (see 4.4.3.4.1.2).

3.4.3.4.1.3 Manual control cable subassembly (MA-6, MA-8, MA- 14, and M.4-16 type inertia reel) throw (stroke). Both terminal ends of the moveable element shall conform to Figures 13 throough 15 and the throw (stroke) of the moveable element of the MA-6, MA-8, MA-14, and MA-16 type manual control cable subassemblies shall be 0.68 $^{+0.03}_{-0.08}$ inches. The flexible tubular casing shall be terminated with end fittings and threaded attachment nuts conforming to Figure 15. The manual control cable subassembly shall be capable of performing satisfactorily irrespective of which end is connected to the inertia reel or manual control handle subassembly (see 4.4.3.4.1.3).

3.4.3.4.2 Manual control cable subassembly adjustability. For MA-6, MA-8, MA-14, and MA-16 type inertia reels, the manual control cable subassembly shall be capable of interfacing at the point of attachment to the inertia reel housing subassembly control head, and shall be capable of being rotated within the plane perpendicular to the take-up spool axis of rotation with a minimum of 12 uniformly spaced adjustments with one on each cardinal point without degrading the capability of the manual control handle/manual control cable to actuate the inertia reel lock. Additional adjustments need not be uniformly spaced (see 4.4.3.4.2).

3.4.3.4.3 Manual control cable subassembly interchangeability. For the MA-1 and MA-2 type inertia reek, all manual control cable subassemblies shall be readily capable of being physically mated between all QPL inertia reels of the same type and between all QPL manual control handles of the same type. For the MA-6, MA-8, MA-14, and MA-16 type inertia reels, all manual control cable subassemblies shall be readily capable of being physically mated between all QPL inertia reck of these types and between all QPL manual control handle

Downloaded from http://www.everyspec.com

subassemblies of these types. The manual control cable subassembly shall be operated, without any degradation of performance (manual and automatic modes), by all manual control handle subassemblies of that type approved for QPL. The manual control cable subassemblies shall meet the requirements of Figures 12 through 15, as applicable for each type of inertia reel configuration (see 4.4.3.4.3).

3.4.3.4.4 Manual control cable subassembly load transmission. The manual control cable subassembly shall be capable of transmitting manual control handle loads required to actuate the inertia reel locking mechanism when the cable or webbing lead-in strap, as applicable, is tensioned with a 25 pound load (see 4.4.3.4.4).

3.4.3.4.5 Manual control cable subassembly throw. The MA-2 type manual control cable subassembly shall be capable of receiving and delivering a 0.38 $\pm$0.03 inch throw (stroke) through a 50° $^{+15^0}_{-10^0}$ throw angle of the MA-2 type manual control handle subassembly. The MA-6, MA-8, MA-14, and MA-16 type manual control cable subassemblies shall be capable of receiving and delivering a 0.68 $^{+0.03}_{-0.08}$ inch throw (stroke) through a 50° $\pm$10° throw angle of the MA-6, MA-8, MA-14, and MA-16 type manual control handle subassembly (see 4.4.3.4.5).

3.4.3.4.6 Manual control cable subassembly performance requirements. The manual control cable subassembly shall meet the material, design and performance requirements:

a. Dimensions (see Figures 12 - 15)

b. Materials (see 3.3).

c. Design and construction (see 3.4).

d. Manual control cable subassembly design requirements (see 3.4.3.4).

e. Cable throw (stroke) (see 3.4.3.4.1, 3.4.3.4.5).

f. Adjustability (see 3.4.3.4.2).

g. Interchangeability (see 3.4.3.4.3).

h. Load transmission (see 3.4.3.4.4).

i. Environmental (see 3.5.5).

j. Life cycle (see 3.5.6.3).

k. Workmanship (see 3.8).

3.4.4 Dimensions. The inertia reel dimensions shall conform to Figures 1 through 15, as applicable.

3.4.5 Weight.

3.4.5.1 Weight of MA-1 type inertia reel. The maximum weight for the MA-1 type of inertia reel, including the shoulder harness lead-in cable, but excluding the manual control cable and manual control handle subassemblies, shall be 3.5 pounds.

3.4.5.2 Weight of MA-2 type inertia reel. The maximum weight for the MA-2 type of inertia reel, including the shoulder harness lead-in cable, but excluding the manual control cable and manual control handle subassemblies, shall be 4 pounds.

Downloaded from http://www.everyspec.com

3.4.5.3 Weight of MA-6, and MA-8 type inertia reefs. The maximum weight for these types of inertia reels, excluding the webbing lead-in strap, manual control cable, and manual control handle subassemblies, shall be one and 1.5 pounds.

3.4.5.4 Weight of MA-14 type inertia reel. The maximum weight for this type of inertia reel, excluding the webbing lead-in strap, manual control cable, and manual control handle subassemblies, shall be 2 pounds.

3.4.5.5 Weight of MA-16 type inertia reel. The maximum weight for this type of inertia reel. excluding the webbing lead-in strap, manual control cable, and manual control handle subassemblies. shall be 2.25 pounds.

3.4.5.6 Weight of manual control handle subassembly. The maximum weight of the manual control handle subassembly shall be 4 ounces.

3.5 System Performance.

3.5.1 Automatic inertia-locking activation. The aircraft coordinate system shown in Figure 16 is applicable for determining acceleration direction for locking of the inertia reels.

3.5.1.1 Unidirectional locking mechanism (MA- 1 type inertia recl). The inertia reel locking mechanism of the MA-1 type of inertia reels, mounted in each of the positions shown in Figure 17, shall lock the cable drum at any increment of extension of the shoulder harness cable with a maximum movement of 1 inch of shoulder harness cable payout as measured from its initial position. Activation shall occur when the inertia reel is subjected to a rearward longitudinal acceleration of 3.0 G or greater. Conversely, locking shall not occur when the inertia reel is subjected to accelerations of 1.5 G or less. When the manual control handle is in the "auto-lock" position and the inertia reel is automatically activated. the drum shall remain locked until unlocked by a complete cycle of the manual control handle under a 25 pound load (see 4.5.1.1).

3.5.1.2 Multidirectional lock ing mechanism (MA-2, MA-6, and MA-8 type inertia reels). The inertia reel locking mechanism of these types of inertia reels, mounted in any of the positions shown in Figure 17, shall lock the cable drum, if the inertia reel contains a cable drum, at any increment of extension of the shoulder harness cable with a maximum movement of 1 inch of the shoulder harness cable payout as measured from its initial position. If the inertia reel contains a webbing spool the locking mechanism shall lock the webbing sped at any increment of extension of the shoulder harness webbing with a maximum movement of 1.50 inch of the shoulder harness webbing payout as measured from its initial position. Activation shall occur when the cable/webbing pays out at a rearward longitudinal acceleration. right or let? transverse accelerations. or vectorial sums thereof, which have a component of 3.0 G or greater. Conversely. the inertia reel shall not lock for acceleration components of 1.5 G or less. When the manual control handle is in the "auto-lock" position and the inertia reel is automatically activated, the drum or spool shall remain locked until unlocked by a complete cycle of the manual control handle under a 25 pound load (see. 4.5.1.2).

3.5.1.3 Omnidirectional locking mechanism (MA-14 type inertia reel). The MA-14 type inertia reel ocking mechanism shall lock the webbing spool at any increment of extension of webbing. and in all mounting orientations shown in Figure 17, with a maximum movement of 1.50 inches of webbing payout as measured from its initial position. Activation shall occur when the webbing/inertia reel housing is exposed to an acceleration of 6.0 G in the plane perpendicular to the spool axis and/or if the webbing is exposed to an acceleration of 2.5 G or greater. Conversely, locking shall not occur when the inertia reel housing is exposed to an acceleration of 4.0 G or less or if the webbing is accelerated at 1.5 G or less at 3 inches of webbing extension or 1.0 G or less at 12 or more inches of webbing extension. When the manual control handle is in the "auto-lock" position and the inertia reel is automatically activated. the webbing spool shall remain locked until unlocked by a complete cycle of the manual control handle under a 25 pound load (see 4.5.1.3).

Downloaded from http://www.everyspec.com

3.5.1.4 Omnidirectional locking mechanism (MA-16 type inertia reel). The MA-16 type inertia reel locking mechanism shall lock the webbing spool at any increment of extension of webbing, and in all mounting orientations shown in Figure 17, with a maximum movement of one and 1.5 inches of webbing payout as measured from its initial position. Activation shall occur when the inertia reel housing is exposed to an acceleration of 6.0 G in any direction and/or if the webbing is exposed to an acceleration of 2.5 G or greater. Conversely, locking shall not occur when the inertia reel housing is exposed to an acceleration of 4.0 G or less or if the webbing is accelerated at 1.5 G or less at 3 inches of webbing extension or 1.0 G or less at 12 or more inches of webbing extension. When the manual control handle is in the "auto-lock" position and the inertia reel is automatically activated, the webbing spool shall remain locked until unlocked by a complete cycle of the manual control handle under a 25 pound load (see 4.5.1.3 and 4.5.1.4).

3.5.1.5 Dual mode inertia reels. Each mode of dual mode (see 6.4.6) type inertia reels shall function independently (see 4.5.1.5).

3.5.2 Flight performance. The inertia reel shall not inadvertently lock while in the automatic locking mode due to the separate or combined effects of aircraft flight dynamics and deliberate occupant motion in the seat during normal flight, combat flight maneuvers, or firing of weapon systems (see 4.5.2).

3.5.3 Stowage/take-up mechanism forces.

3.5.3.1 Cable drum extension/retraction forces (MA-1 and MA-2 type inertia reels). The force required to extend the cable (see 6.4.1) of the MA-1 and MA-2 type inertia reels shall be not less than 2 pounds nor more than 4 pounds for the initial 2 inch increment of extension and not more than 6 pounds for extension from 2 to 17 inches of extension. The force may increase to a maximum of 18 pounds as the cable is extended from 17 inches to full extension. The retracting force shall be from 2 to 18 pounds during retraction of the fully extended cable to 17 inches of cable extension and 2 to six 6 pounds from 17 inches to the initial 2 inch increment of extension. The retracting force shall not be less than 2 pounds nor more than 4 pounds during the final 2 inch increment of retraction. The drum shall lock the cable in increments of 0.50 inch or less (see 4.5.3.1).

3.5.3.2 Webbing spool extension/retraction forces (MA-6, MA-8, MA-14, and MA-16 type inertia reels). The force required to extend the webbing (see 6.4.1) of the MA-6, MA-8, MA-14, and MA-16 type inertia reels shall not be less than 2 pounds nor more than 9 pounds during the first 22 inches of extension. The force may increase to a maximum of 18 pounds as the webbing is extended from 22 inches to full extension. The retracting force shall be from 2 to 18 pounds during retraction from the full extension to 22 inches of webbing extension and 2 to 9 pounds from 22 inches to full retraction. The rotating spool shall lock the webbing in increments of 0.50 inch or less (see 4.5.3.2).

3.5.4 Proof strength. Inertia reel assemblies, including the mounting provisions, cable/webbing, and terminal end fittings and harness fitting, shall withstand a static proof strength load for a period of 60 seconds with no permanent deformation and may be placed in service upon removal of the load. Recalibration is allowed following proof load testing. Each inertia reel type shall be capable of meeting all performance requirements specified herein after the proof load test. Inertia reels having more than one locking mechanism shall meet the static strength requirements for each locking mechanism. Description of the load instrumentation and method of inertia reel attachment must be detailed in the test plan (see 4.5.4).

3.5.4.1 Proof strength of the MA-1, MA-2, and MA-6 type inertia reels. These types of inertia reels shall withstand a static proof strength load of 2,660 pounds (see 4.5.4.1).

3.5.4.2 Proof strength of the MA-8, MA-14, and MA-16 type inertia reels. These types of inertia reels shall withstand a static proof strength load of 3,330 pounds (see 4.5.4.2).

3.5.5 Environmental conditions. The inertia reel assembly or subassembly under test shall withstand the various environmental exposures specified herein without performance degradation below the performance levels specified herein.

Downloaded from http://www.everyspec.com

3.5.5.1 High temperature. The inertia reel assembly or subassembly under best shall withstand a non-operating (storage) high temperature cycle exposure of +95°F to +230°F (35°C to 110°C) without performance degradation. The inertia reel shall then deliver specified performance (operational) at + 170°F (76.6°C) without temporary or permanent performance degradation below the performance levels specified (see 4.5.5.1).

3.5.5.2 Low temperature. The inertia reel assembly or subassembly under test shall withstand a non-operating (storage) low temperature exposure of -65°F (-54°C) without perfomance degradation. The inertia reel shall then deliver specified performance (operational) at -40°F (-40°C) without temporary or permanent performance degradation below the performance levels specified (see 4.5.5.2).

3.5.5.3 Humidity. The inertia reel assembly or subassembly under test shall withstand exposure to 160°F (71°C) and 80% relative humidity without temporary or permanent performance degradation or causing physical or chemical deterioration of any inertia reel components (see 4.5.5.3).

3.5.5.4 Fungus. The inertia reel assembly or subassembly under test shall show no evidence of being a nutrient for fungi. nor when exposed to fungal organisms shall the inertia reel assembly or subassembly exhibit any performance degradation below the performance levels specified (see 4.5.5.4).

3.5.5.5 Salt fog. The inertia reel assembly or subassembly under test shall be corrosion-resistant or processed to withstand the corrosive effects of salt fog and stack gases without any performance degradation below the performance levels specified (see 4.5.5.5).

3.5.5.6 Sand and dust. The inertia reel assembly or subassembly under test shall withstand exposure to a 170°F (76.6°C) sand environment and 73°F (22.8°C) dust environment without experiencing performance degradation below the performance levels specified (see 4.5.5.6).

3.5.5.7 Vibration. The inertia reel assembly or subassembly under test shall withstand vibration environments of basic transportation. propeller aircraft, jet aircraft, and helicopters without inadvertent lock-ups or performance degradation below the performance levels specified (see 4.5.5.7).

3.5.6 Inertia reel life cycle. The inertia reel assembly or subassembly under test shall withstand the life cycles without performance degradation below the performance levels specified (see 4.5.6).

3.5.6.1 Stowage/take-up mechanism life cycle. The inertia reel stowage/take-up mechanism shall have a functional life of not less than 60,000 cycles distributed as follows:

a. 36,000 cycles 0 to 0.25 full strap extension.

b. 12,000 cycles 0 to 0.50 full strap extension.

c. 6,000 cycles 0 to 0.75 full strap extension.

d. 6,000 cycles O to full strap extension.

3.5.6.2 Shoulder harness attachment cable terminal fitting life cycle For MA-1 and MA-2 type inertia reels, the cable, fully retracted and bent 30° from the axis of the cable at the point of the cable entrance to the housing, shall withstand 5,000 cycles of 360° rotation with the control handle in the "auto-lock" position and 5,000 cycles of 360° rotation with the control handle in the "manual-lock" position with no evidence of breakage or excessive wear on either the cable or the terminal fitting which would degrade the performance of the inertia reel assembly below the performance levels specified (see 4.5.6.2).

Downloaded from http://www.everyspec.com

3.5.6.3 Manual control cable and handle subassemblies life cycle. The manual control mechanism, consisting of the manual control handle subassembly and manual control cable subassembly, shall withstand 25,000 cycles of positioning the control handle from the "manual-lock" to "auto-lock" and back to "manual-lock" without performance degradation below the performance levels specified (see 4.5.6.3).

3.5.7 Design static strength.

3.5.7.1 Design static strength of inertia reels. Inertia reels, including the inertia reel housing subassemblies and mounting provisions, and the webbing lead-in strap subassemblies, including the terminal end fitting, as applicable, shall withstand a design static load (see 6.4.5) for a period of 60 seconds without any structural or mechanical failure which would impair the seat/occupant restraint capability. Inertia reels having more than one locking mechanism shall meet the design static strength requirements for each locking mechanism (see 4.5.7.1).

3.5.7.1.1 Design static strength of MA-1, MA-2, and MA-6 type inertia reels. These types of inertia reels shall withstand a design static load of 4,000 pounds (see 4.5.7.1.1).

3.5.7.1.2 Design static strength of MA-8, MA-14, and MA-16 type inertia reels. These types of inertia reels shall withstand a design static load of 5,000 pounds (see 4.5.7.1.2).

3.5.7.2 Design static strength of webbing. The webbing, excluding its terminal end fitting and attachment fitting, when grasped at each end, shall be capable of withstanding a design static load of 8,000 pounds for 60 seconds without failure (see 4.5.7.2).

3.5.8 Dynamic crash loads. In all specified mounting orientations shown in Figure 17, the inertia reel, including its cable/webbing, shall be capable of withstanding survivable crash loads. Application of the crash loads shall cause the locking mechanism to lock as specified (see 4.5.8).

3.6 Lubrication. Unless otherwise specified, lubrication shall be in accordance with MIL-HDBK-275.

3.7 Identification of product. Identification marking shall be in accordance with MIL-STD-130. The inertia reel housing subassembly shall have a permanently attached nameplate which shall contain the following information:

REEL, SHOULDER HARNESS, INERTIA LOCK
Type (see 6.2)
Specification MIL-R-8236F
National Stock No.
Manufacturer's Part No.
Manufacturer's Serial No.
Contract or Order No.
Manufacturer's name/trade mark and CAGE
U.S.

3.7.1 Permanent identification of inertia reel. The housing of the inertia reel shall be stamp imprinted with the serial number and date of manufacture to coincide with the serial number of the permanently attached nameplate.

3.7.2 Anti-Tampering seal. Anti-tampering seals shall be affixed to primary unit entry points. The anti-tampering seals shall retain their integrity throughout the life of the product.

3.8 Workmanship. The inertia reel assembly and subassemblies, including all detail parts, shall be fabricated and finished to produce an item free from defects which could affect proper functioning of the complete unit in service.

Downloaded from http://www.everyspec.com

3.9 Quality Program. The manufacturer shall establish, implement, and maintain a Quality Assurance Program which meets the requirements of MIL-Q-9858. The quality program, including procedures, processes, and products shall be documented and shall be subject to review and approval by the Government Qualifying Activity (see 6.4.8) or its designee. The quality program is subject to disapproval whenever the manufacturer's procedures do not accomplish [heir objectives, as set forth in the manufacturer's quality program. The program shall assure adequate quality throughout all areas of the manufacturer's development performance, specifically: design, fabrication. processing. assembly, inspection. test, packaging, shipping, and storage. The quality program shall include, but not be limited to the following:

a. The program shall provide for the prevention and ready detection of discrepancies and for timely and positive corrective action.

b. The program shall clearly delineate the authority and responsibility of those in charge of all aspects of the manufacturer's program.

c. The program shall include an effective control of purchased materials and subcontracted work, and shall also include effective execution of responsibilities shared jointly with the Government or related to Government functions.

d. Effective management for quality shall be clearly prescribed by the manufacturer and the manufacturer shall maintain and use any records or data essential to the economic and effective operation of his quality program.

The inclusion of an inertia reel subassembly on the QPL does not relieve the manufacturer of his responsibility for furnishing products that meet all specification requirements or for the performance of specified inspections and tests for such material. The contractor shall provide arid maintain an inspection system, in accordance with the requirements of MIL-I-45208. This system shall assure that all inertia reel subassemblies submitted to the Government for acceptance conform to specification requirements.

3.10 Service life. inertia reels shall be designed to achieve a minimum installed service life of 10 years.

3.11 Safety of equipment To preclude. breakage of inertia reel spool springs, all inertia reds shall be delivered with the spring pre-wound to the design tension for full extension in the correct direction, with the keeper installed in the slot at 90° to the spool axis. Each inertia reel shall be equipped with a removable warning tag:

CAUTION - PRE-WOUND

The end of the inertia reel housing through which access to the spool is obtained shall be marked to indicate direction of rotation to retract the webbing lead-in strap.

4. QUALITY ASSURANCE PROVISIONS

4.1 Responsibility for inspection. Unless otherwise specified in the contract or purchase order, the manufacturer is responsible for the performance of al] inspection requirements as specified herein and may use his own or any other facilities suitable for the performance of the quality conformance inspection requirements specified in accordance with MIL-I-45208 and MIL-Q-9858, unless disapproved by the Government or if the inspection is part of the qualification testing. The Government reserves the right to perform any inspection or test it deems necessary to assure supplies and services conform to prescribed requirements

Downloaded from http://www.everyspec.com

4.1.1 Responsibility for compliance. All items shall meet the requirements of this specification applicable to that type inertial reel, including its subassemblies (see 1.2). The inspection set forth in this specification shall become a part of the manufacturer's overall inspection system or quality program. The absence of any inspection requirements in this specification shall not relieve the manufacturer of the responsibility of assuring that all products or supplies submitted to the Government for acceptance comply with all requirements of this specification. Sampling for quality conformance inspection does not authorize submission of known defective material, either indicated or actual, nor does it commit the Government to acceptance of defective material.

4.2 Classification of inspections. The inspection requirements specified herein are classified as follows:

a. Qualification inspection (see 4.2.1 and 4.2.2)

b. Quality conformance inspection (see 4.2.3).

4.2.1 Qualification inspection. Qualification of inertia reels and their subassemblies shall consist of all tests specified (see 4.3 through 4.6) and any supplemental tests as may be required by the Government Qualifying Activity. Service tests (application) under actual or simulated service conditions assuring product compatibility in the proposed/intended installation are required by the Government Qualifying Activity.

4.2.1.1 Qualification samples.

4.2.1.1.1 Inertia reels. The qualification samples shall consist of randomly selected complete inertia reels (see 3.4.3), of each manufacturer's part number for which qualification is desired, and a complete set of applicable manufacturer's drawings. For all types of inertia reels, except for the MA-14 and MA-16, the qualification test samples shall consist of 19 complete inertia reels and service test inertia reels, if applicable. For the MA-14 and MA-16 type inertia reels, the qualification samples shall consist of 30 complete inertia reels plus inertia reels for service test requirements. Tables IA and IB identify the test sample distribution for qualification and the required test sequence.

4.2.1.1.2 Webbing lead-in strap subassembly (MA-6, MA-8, MA-14, and MA-16 type inertia reels). Webbing lead-in strap subassemblies used on the MA-6, MA-8, MA-14, and MA-16 type inertia reels may be offered independent of a specific inertia reel for qualification. The qualification test program, defined using applicable parts of this specification and MIL-W-25361, shall be conducted to determine whether the webbing lead-in strap subassembly is compatible with all QPL MA-6, MA-8, MA-14, and MA- 16 type inertia reels with webbing spools. A quantity of 10 samples shall be submitted to the approved testing activity.

4.2.1.1.3 Manual control cable subassembly. A manual control cable subassembly may be offered independent of a specific inertia reel and independent of a specific manual control handle subassembly for qualification. The qualification test program, defined using applicable parts of this specification and MIL-C- 7958, shall be conducted to determine whether the manual control cable subassembly is compatible with all QPL inertia reels and all QPL manual control handle subassemblies in the appropriate type (e.g.: MA-1; MA-2; or between the MA-6, MA-8, MA-14, and MA-16). A quantity of 10 manual control cable subassemblies shall be submitted to the approved testing activity.

4.2.1.1.4 Manual control handle subassembly. A manual control handle subassembly may be offered independent of a specific inertia reel and independent of a specific manual control cable subassembly for qualification. The qualification test program, defined using applicable parts of this specification, shall be conducted to ascertain whether the manual control handle subassembly is compatible with all QPL manual control cables subassemblies and all QPL inertia reels in the appropriate type (e.g.: MA-1; MA-2; or between the MA-6, MA-8, MA-14, and MA-16). A quantity of 10 manual control handle subassemblies shall be submitted to the approved testing activity.

Downloaded from http://www.everyspec.com

4.2.1.2 Testing facility. All qualification tests shall be conducted at and by an independent certified test facilities or by a Govemrnent testing activity at manufacturer's expense. The testing facility shall be approved by the Government Qualifying Activity. The Government Qualifying Activity shall be notified 30 days prior to the start of testing to arrange for Government witnessing of testing. The manufacturer shall make arrangements with the test laboratory to permit the government witness to photograph/video tape qualification tests at that facility. Additionally, the manufacturer shall make arrangements for all the test set-ups, and any anomalies or failures to be photographed for inclusion in the test report. Following any failure, the test article shall be put under Government control pending review of associated data by the Government Qualifying Activity.

4.2.1.3 Test documentation. As part of the test plan submitted for Government approval, a list of al! test equipment calibration dates and equipment accuracy used by the test facility shall be provided. The accuracy of the G measurement shall be ±0.1 G or better to provide required accuracy in determining inertia reel lock-up accelerations. Verification data shall be submitted for the equipment used for the automatic operation testing to demonstrate reproducible and accurate measurement of G accelerations.

4.2.1.3.1 Test plan. The manufacturer shall prepare and submit to the Government Qualifying Activity for review and approval a proposed qualification test plan. No qualification testing can start without an approved test plan. The test plan. as a minimum. shall include the following:

a. Manufacturer name and address.

b. Proposed test facility and address.

c. Test article description. including proposed applications.

d. Description of test equipment, method of operation, accuracies, certifications and calibration dates.

e. Description of test data acquisition system. including filtering parameter used, level/aspects.

f. Photographic record plan.

g. Data analysis plan.

h. How test item will be handled if failure occurs.

4.2.1.3.2 Test report. The manufacturer shall prepare and furnish to the Government Qualifying Activity a qualification test report documenting. at a minimum. the following:

a. Manufacturer name and address.

b. Test facility name and address.

c. Names and organizations of witnesses and the tests which they witnessed.

d. Test article description. including part number. serial number. and proposed applications.

e. Test plan as approved by the Governrnent Qualifying Activity with approval letter.

f. Description of each article of test equipment used, including test equipment which functions the article and how it operates.

g. Calibration certificates for all test equipment used.

Downloaded from http://www.everyspec.com

h. Description of the test data acquisition system, including, for each channel of electronic data, information concerning filtering used.

i. Copies of each data record (trace) and data sheets.

j. Pre-and post-test photographs of test articles, including photographs of any failures noted during testing.

k. Pre-and post-test photographs illustrating use of each article of test equipment.

l. Description of each failure, detailed failure analysis, and corrective action taken to resolve failure.

m. Description of each non-failure anomaly and results of investigation to determine cause.

n. Description of each "no-test" and the cause.

o. Copies of video/motion photography records acquired during tests.

p. Analysis/analyses of test results, including statistical, graphical and narrative data.

q. Letters from Cognizant Engineering Activity/ Configuration Management Authority (see 6.4.3 and 6.4.4) accepting/ concurring with proposed service testing (applications).

r. Letters from Cognizant Engineering Activity/ Configuration Management Authority summarizing conditions, duration, and results of service testing.

4.2.1.4 Criteria for judging the acceptability of the results of individual tests and total test program. The criteria specified has been established to provide assistance in determining the acceptability of the results obtained from both the individual tests and from the total test program. Determination of the acceptability of the individual tests and of the total test program shall be made on the basis of these criteria.

4.2.1.4.1 Classification of individual tests. In accordance with the criteria provided herein, tests shall be classified as:

a. No test.

b. Fail.

c. Pass.

4.2.1.4.1.1 No test. A "no test" shall be determined to have occurred if:

a. The test condition was not within the acceptable range as required by the test plan.

b. The inertia reel fails to operate as a result of a non-inertia reel system (i.e., sled, test initiation system) malfunction, or test equipment failure.

c. One or more failures of the data collection system or photographic coverage results in insufficient data or coverage to permit adequate and satisfactory analysis of the test.

d. Test articles which did not fail or sustain damage during the test, were damaged during the post-test recovery or hardware analysis phase.

Downloaded from http://www.everyspec.com

4.2.1.4.1.2 Fail. A test shall be deemed to be a failure if any requirement is not met and the reason for the failure is other than one of the conditions which justify a "no test" determination. The Government Qualifying Activity will determine what action(s) shall be required following the review of the failure analysis and proposed corrective action.

4.2.1.4.1.3 Pass. A test of the inertia reel shall be judged to be a pass only if all requirements are demonstrated in accordance with the appropriate testing procedures.

4.2.1.4.2 Government notification requirement of any qualification test failures. The Government Qualifying Activity shall be notified of any qualification test failure within 24 hours of the occurrence. Following written notification of a failure, the manufacturer shall provide a failure analysis, a corrective action plan with substantiating test data, and recommendation of test(s) which should be re-run. All testing shall be terminated until the Government Qualifying Activity provides written approval to re-initiate testing. The failure, including analysis and corrective action: and associated testing shall be fully documented in the test report.

4.2.1.4.3 Government notification requirement of any "no-test" condition. For a "no-test" condition. the manufacturer may provide notification verbally with an analysis of the cause, including corrective action, and a recommendation of which test(s) should be re-run. The testing should be stopped until the Government Qualifying Activity, or its designee. concurs with the testing facility-recommended "no-test" classification and provides authorization to resume testing. In the case of a "no test", the Government Qualifying Activity, or its designee. may provide verbal approval to resume testing followed by written approval. The "no-test" condition, including corrective action and retest. shall be fully documented in the test report.

4.2.1.4.4 Re-test criteria. The testing shall be continued in sequence when a "no-test" determination is made by the Government Qualifying Activity, or its designee. and approval to resume testing has been granted. The test for which the "no-test" determination was made shall be repeated using the original test article unless it was structurally loaded (i.e., in a dynamic crash test, static strength test. etc.) or the test article was damaged during the test for which a "no-test" determination was made. In those cases. a new test article shall be substituted and the test, or entire series of qualification tests which had been previously run using the original item, shall be repeated. Any substitution of test articles must be approved by the Government Qualifying Activity and fully documented in the test report.

4.2.1.4.5 Criteria for QPL rejection. When the inertia reel assembly fails to perform in accordance with requirements as specified herein. the qualification effort shall be terminated and application for QPL inclusion rejected.

4.2.2 Service tests A minimum of 5 complete inertia reels for each installation will be used by the Government Activity responsible for service tests, to assess their suitability for/compatibility with the proposed installation, and their reliability under actual service conditions. Lengths of cable or webbing lead-in strap subassemblies and control cable subassemblies for each inertia reel configuration shall be specified by the Government Verifying Activity (see 6.4.9) responsible for service tests and reflected in the test plan.

4.2.2.1 Retention of qualification. Every 2 years following approval for listing on the QPL, the supplier shall submit to the Government Qualifying Activity a certification. that no element requiring notification of the Govemment Qualifying Activity has changed since the prior certification. Any changes implemented since the last certification. including changes previously disclosed in full, shall be summarized on the current certification form with the submission and Government Qualifying Activity approval dates for each change listed. The supplier thus certifies that all changes are limited to those previously disclosed and for which approval has been obtained from the Govemment Qualifying Activity to retain QPL status.

Downloaded from http://www.everyspec.com

4.2.3 Quality conformance inspection. Quality conformance inspection of the inertia reel or subassemblies shall consist of the following examination and tests:

a. Visual Examination (see 4.2.3.1).

Failure to meet any of the requirements specified herein shall be considered cause for rejection of the inertia reel or subassembly.

b. Acceptance tests (see 4.2.3.2).

Failure to meet any of the requirements specified herein shall be considered cause for rejection of the lot.

c. Sampling (see 4.2.3.3).

Failure to meet any of the requirements specified herein shall be considered cause for rejection of the lot.

4.2.3.1 Visual examination. Each inertia reel or subassembly shall be examined to determine compliance with this specification with respect to material and workmanship, lubrication, finish, and marking instructions.

4.2.3.2 Acceptance tests. Each inertia reel or subassembly shall be subjected to the following acceptance tests, as applicable:

a. Automatic operation (see 4.5.1).

b. Cable extension and retraction, if applicable (see 4.5.3.1).

c. Webbing extension and retraction, if applicable (see 4.5.3.2).

d. Manual control operation (see 4.4.3.3 - excluding sublevels).

Any inertia reel or subassembly found to be defective during the acceptance portion of the qualification tests shall be reported in writing within 24 hours to the Government Qualifying Activity (see 6.6). Defects noted during production lot testing shall be reported in accordance with MIL-STD-831 within 24 hours to the Government Procuring Activity with a courtesy copy to the Government Qualifying Activity.

4.2.3.3 Sampling. Samples shall be selected in accordance with Production Acceptance Test Sample Size identified in Table II. A lot shall consist of inertia reels or subassemblies of the same type produced under the same conditions, and all submitted for inspection at one time. Any inertia reel or subassembly found to be defective during the sampling portion of the qualification tests shall be reported in writing within 24 hours to the Government Qualifying Activity (see 6.6). Defects noted during production lot sampling shall be reported in writing within 24 hours to the Government Procuring Activity with a courtesy copy to the Government Qualifying Activity. The inertia reels or subassemblies selected for the lot sampling shall be subjected to the following tests, as applicable:

a. Proof strength (see 4.5.4).

b. Dimension examination (see 4.4.4)

c. Weight verification (see 4.4.5).

4.3 Material determination. The following material determinations shall be accomplished as listed.

4.3.1 Metals. The use of non-corrosive metals in the construction of the inertia reels shall be determined by inspection for compliance with MIL-STD-889.

Downloaded from http://www.everyspec.com

4.3.1.1 Corrosion protection. Corrosion practices and protection of dissimilar metal interfaces shall be determined by inspect ion for compliance with MIL-STD-889 and MIL-F-7179.

4.3.1.2 Finishes. The inertia reel shall be inspected to determine if protective finishes are utilized and are in accordance with MIL-S-5002 for surface treatments and inorganic coatings and MIL-F-18264 and MIL-HDBK-132 for organic finishes. Each inertia reel shall be inspected for cracks, chips, or scales. Each inertia reel exterior color shall be inspected for compliance with FED-STD-595 #37038, lusterless black.

4.3.1.3 Plating. The inertia reel shall be inspected to determine whether ail steel parts in contact with aluminum or aluminum alloy are coated with aluminum by ion vapor deposition in accordance with MIL-C-83488, Type II, class 1.

4.3.1.4 Anodizing. The inertia reel shall be inspected to determine that all aluminum and aluminum alloy parts are anodized in accordance with MIL-A-8625. Type II or Type III, as appropriate.

4.3.2 Screw Threads. All screw threads of the inertia reel shall be inspected during pans interchangeability demonstration (see 4.4.2) for conformance with MIL-S-7742. Screws shall be inspected to determine if they have positive locking capability.

4.4 Design and constnuction verification. The inertia reel or subassemblies shall be inspected visually following each individual environmental conditioning test to ensure that the inertia reel performance is not degraded below specified levels during exposure or post-exposure testing. Maintenance assembly and disassembly for replacement of thc webbing or cable and the control handle and cable assembly shall be demonstrated without the use of special tools.

4.4.1 Standard parts determination. The inertia reel drawings shall be inspected to verify the use of MS and AN standard parts. Electronic parts shall be inspected to verify the use of Military Specification compliant components.

4.4.2 Parts interchangeability demonstration. Parts interchangeability shall be verified by demonstration. Three inertia reds shall be randomly selected from the test sample pool. The serial numbers shall be noted and quality conformance tests conducted. Five functionally-critical parts (excluding fasteners) shall be randomly selected to demonstrate intercharngeability. The same 5 randomly selected parts shall be removed from all 3 inertia reels and mixed together, All 3 inertia reels shall then be reassembled using this pool of parts. The iertia reel shall be recalibrated and quality conformance tests conducted to demonstrate no performance degradation below the performance levels specified herein.

4.4.3 Subassemblies. Subassemblies may be qualified independent of the complete inertia reel assembly. The required tests are listed in Table III and sample information (see 4.2.1.1).

4.4.3.1 Inertia reel housing subassembly demonstration. The inertia reel housing mechanism cover shall be removed using common hand tools to assess compliance with the requirement for the task to be performed within a maximum of 5 minutes to allow for recalibration of the internal mechanism.

4.4.3.1.1 Inertia reel locking mechanism actuation demonstration.

4.4.3.1.1.1 inertia reel locking mechanism actuation (MA- I type inertia reel) demonstration. The MA-1 type inertia reel locking mechanism shall be functioned using an MA-1 type manual control handle subassembly attached to an MA-1 type manual control cable subassembly to ascertain whether the cable throw (stroke) of 1.21 ±0.03 inch fully and completely activates the MA-1 type inertia reel lock/unlock mechanism. This demonstration shall be repeated 5 times.

Downloaded from http://www.everyspec.com

4.4.3.1.1.2 Inertia reel locking mechanism actuation (MA-2 type inertia reel) demonstration. The MA-2 type inertia reel locking mechanism shall be functioned using an MA-2 type manual control handle subassembly attached to an MA-2 type manual control cable subassembly to ascertain whether the cable throw (stroke) of 0.38 $\pm$0.03 inch fully and completely activates the MA-2 type inertia reel lock/unlock mechanism. This demonstration shall be repeated 5 times.

4.4.3.1.1.3 Inertia reel locking mechanism actuation (MA-6, MA- 8, MA-14, and MA-16 type inertia reels) demonstration. The MA-6, MA-8, MA-14, and MA-16 type inertia reel locking mechanisms shall be functioned using an MA-6, MA-8, MA-14, and MA-16 type manual control handle subassembly attached to an MA-6, MA-8, MA-14, and MA-16 type manual control cable subassembly to ascertain whether the cable throw (stroke) of 0.68 $^{+0.03}_{-0.08}$ inches fully and completely activates the MA-6, MA-8, MA-14, and MA-16 type inertia reel lock/unlock mechanism. This demonstration shall be repeated 5 times.

4.4.3.1.2 Inertia reel housing subassembly interchangeability. The inertia reel housing subassembly shall be mated with 6 samples of each QPL webbing lead-in strap subassembly and each existing restraint harness assembly to assess its compatibility with existing inventories and with 6 samples of each QPL manual control cable subassembly and each QPL manual control handle subassembly combination to assess its ability to perform in accordance with the requirements specified herein, with each such potential combination in current inventories.

4.4.3.1.3 Inertia reel housing subassembly shoulder harness attachment cable (MA-1 and MA-2 type inertia reels) inspection. The cable for shoulder harness attachments for the MA-1 and MA-2 type inertia reel housing subassemblies shall be inspected for conformance to MIL-W-83420, and secure attachment to the cable drum. The swaged-type clevis end fitting shall be inspected to assure compliance with Figures 5 and 6, as applicable. On all inertia reel housing subassemblies where Dimension "A" on Figures 1 and 2 is more than 0.0 inch, the cable shall be retracted and measured to demonstrate that the permanent stop prevents the inertia reel from retracting more than 18 inches of cable from the fully extended position. The inertia reel housing subassembly shall be inspected for a durable dust cover and guide for the shoulder harness cable.

4.4.3.1.4 Inertia reel drum/spool capacity demonstration. The shoulder harness cable of the MA-1 and MA-2 type inertia reel housing subassemblies shall be fully extended and measured. The cable shall then be retracted and extended 10 times to demonstrate performance without binding. The shoulder harness webbing of the MA-6, MA-8, MA-14, and MA-16 type inertia reel housing subassemblies shall be fully extended and measured. The webbing shall then be retracted and extended 10 times to demonstrate performance without binding.

4.4.3.1.5 Inertia reel housing subassembly adjustability demonstration. For MA-6, MA-8, MA-14, and MA-16 type inertia reels, the inertia reel housing subassembly control head shall be rotated within the plane perpendicular to the take-up spool axis and then functioned to verify the capability of adjustment in a minimum of 12 positions without degradation below inertia reel performance requirements specified herein.

4.4.3.2 Shoulder harness attachment subassembly.

4.4.3.2.1 Shoulder harness attachment webbing (MA-6, MA-8, MA- 14, and MA-16 type inertia reels) inspection. Where applicable, the webbing used for shoulder harness attachment shall be inspected for conformance to MIL-W-25361 Type IV except that the width shall be 1.75 $\pm$0.0625 inches, the thickness shall be 0.055 to 0.075 inch and the breaking strength shall be at least 8,000 pounds. Webbing replacement shall be demonstrated without disassembly of the inertia reel. The end fitting shall be inspected for compliance with Figures 7 and 8. During the webbing replacement, the insertion distance of the webbing into the end fitting shall be measured. Inspection of the inertia reel shall demonstrate that the webbing is protected against damage by snagging or rubbing at the point of attachment.

Downloaded from http://www.everyspec.com

4.4.3.2.1.1 Webbing lead-in straps subassembly standard length demonstration. A standard 18 inch webbing lead-in strap subassembly shall be installed in MA-6, and MA-8 type inertia reels and a standard 24 inch webbing lead- in strap subassembly shall be installed in MA-14 and MA-16 type inertia reds, as appropriate, and the webbing shall be extended and retracted to assess the capability of the inertia reel to accept the required length of webbing.

4.4.3.2.1.2 Webbing lead-in strap subassembly interchangeability demonstration. The MA-6, MA-8, MA-14, and MA-16 type webbing lead-in strap subassemblies shall be installed into all QPL MA-6, MA-8, MA-14, and MA- 16 type inertia reel take-up spools without degrading performance. The lead-in webbing subassembly end fittings shall be inspected for compliance with end fitting dimensions, Figure 8 and shall interchange with ail end fittings of the MA-6, MA-8, MA-14, and MA-16 type approved for QPL. The integral end fitting shall be tested at full extension of the webbing to ascertain whether the webbing/spool interface meets the proof and design static toad requirements. specified herein.

4.4.3.2.1.3 Webbing lead-in strap subassembly qualification. The webbing lead-in subassembly shall be subjected to the following tests/inspections when qualified only as a subassembly:

a. Dimensions (see Figures 3, 7-8, 4.4.3.2).

b. Materials (see 4.3).

c. Design and construction (see Figure 4, 4.4).

d. Environmental (see 4.5.5).

e. Interchangeability (see 4.4.3.2.1.2).

f. Design static strength (see 4.5.7).

4.4.3.2.1.4 Integrated restraint harness assembly interchangeability. Interchangeability of the integrated restraint harness assembly webbing lead-in strap shall be demonstrated during service installation verification prior to approval for QPL. Certification of interchangeability for each type of integrated restraint harness assembly is required from the Government Verifying Activity responsible for service tests as part of the qualification test report.

4.4.3.3 Manual control handle subassembly operation demonstration. The manual control handle subassembly, while attached to the inertia reel via the manual control cable subassembly. shall be functioned to permit assessment of the capability of the 2 position handle to be retained in and moved between the "auto-lock" and "manual-lock" positions. With the inertia reel and manual control assembly mounted as shown in Figures 9 through II, as applicable, the control handle shall be moved from the "auto-lock" to the "manual-lock" position. The force required to operate the manual control handle shall be 10 ±5 pounds. The movement shall be within the limits specified in Figures 9 through 11, and shall cause the inertia reel to lock positively and to completely unlock. When the manual control handle is placed in the "manual-lock" position. the inertia reel shall not become unlocked unless the control handle is placed into the "auto-lock' position. With the inertia reel locked in the "auto-lock" position, it shall be demonstrated that the inertia reel can be. unlocked (ratcheting is acceptable) with a dead weight load of 25 pounds applied to the shoulder harness cable or webbing. Measurements shall be taken to permit assessment of the extension of the cable or webbing exclusive of webbing stretch and packing when the manual control cable locks the cable drum or webbing spool at any increment of extension. The manual control handle subassembly shall be inspected to determine compliance with installation requirements, specified herein While connected to the inertia reel. the static force required to move the control handle from both of its 2 functional positions to the opposite position shall be measured. When the handle is being moved from the "manual- locked" position to the "auto-locked" position. the 10 ± 5 pound handle load shall be applied while a 25

Downloaded from http://www.everyspec.com

pound load is concurrently applied to the inertia reel strap. While connected to the inertia reel, the control handle shall be moved from each functional position to the opposite position within 0.125 to 0.150 seconds. The test shall be performed 3 times for each of the 2 directions of handle movement. Before and after each test, it shall be verified that the reel is in the proper functional mode associated with each handle position.

4.4.3.3.1 Manual control handle subassembly interchangeability demonstration.

4.4.3.3.1.1 Manual control handle subassembly (MA-1 type inertia reel) interchangeability demonstration. When attached to all QPL manual control cable subassemblies, the manual control handle subassembly shall lock/unlock the MA-1 inertia reel without any performance degradation. The manual control handle subassembly shall be inspected to assess compliance with Figure 9.

4.4.3.3.1.2 Manual control handle subassembly (MA-2 type inertia reel) interchangeability demonstration. When attached to all QPL manual control cable subassemblies, the manual control handle subassembly shall lock/unlock the MA-2 inertia reel without any performance degradation. The manual control handle subassembly shall be inspected to assess compliance with Figure 10.

4.4.3.3.1.3 Manual control handle subassembly (MA-6, MA-8, MA- 14, and MA-16 type inertia reels) interchangeability demonstration. When attached to all QPL manual control cable subassemblies, the manual control handle subassembly shall lock/unlock the MA-6, MA-8, MA-14, and MA-16 type inertia reels without any performance degradation. The manual control handle subassembly shall be inspected to assess compliance with Figure 11.

4.4.3.3.2 Manual control handle subassembly throw demonstration.

4.4.3.3.2.1 Manual control handle subassembly (MA-1 type inertia reel) throw demonstration. The MA-1 type manual control handle subassembly, while attached to a MA-1 type manual control cable subassembly, shall be moved from the "manual-lock" position to the "auto-lock" position to assess the angle of throw of the manual control handle and the throw (stroke) of the manual control cable.

4.4.3.3.2.2 Manual control handle subassembly (MA-2 type inertia reel) throw demonstration. The MA-2 type manual control handle subassembly, while attached to a MA-2 type manual control cable subassembly, shall be moved from the "manual-lock" position to the "auto-lock" position to assess the angle of throw of the manual control handle and the throw (stroke) of the manual control cable.

4.4.3.3.2.3 Manual control handle subassembly (MA-6, MA-8, MA- 14, and MA-16 type inertia reels) throw demonstration. The MA-6, MA-8, MA-14, and MA-16 type manual control handle subassemblies, while attached to a MA-6, MA-8, MA-14, MA-16 type manual control cable subassembly, shall be moved from the "manual-lock" position to the "auto-lock" position to assess the angle of throw of the manual control handle and the throw (stroke) of the manual control cable.

4.4.3.3.3 Manual control handle subassembly qualification. The manual control handle subassembly shall be subjected to the following tests/inspections when qualified only as a subassembly:

a. Dimensions (see Figures 9 - 11)

b. Materials (see 4.3).

c. Design and construction (see 4.4)

d. Manual control handle subassembly operational demonstration (see 4.4.3.3).

e. Interchangeability (see 4.4.3.3.1).

Downloaded from http://www.everyspec.com

f. Throw angle (see 4.4.3.3.2).

g. weight (see 4.4.5).

h. Environmental (see 4.5.5).

i. Life cycle (see 4.5.6.3).

j. Lubrication (see 4.6).

k. Workmanship (see 4.8).

4.4.3.4 Manual control cable subassembly design inspection. The external control cable subassembly shall be attached (o an inertia reel and manual control handle subassembly to ascertain whether the manual control cable subassembly is interchangeable without degradation of performance. When the manual control handle is functioned from the "au{o-leek" to the "manual-lock" position. the inertia reel shall be inspected to ascertain if the cable locked the inertia reel. Conversely, when the manual control handle is functioned from the "manual-lock" position to the "auto-lock" position, the inertia reel shall be inspected to verify if the cable unlocked the inertia reel. The manual control cable subassembly shall be inspected to determine compliance with installation requirements. specified herein. The test shall be performed 3 times for each of the 2 directions of handle movement. Before and after each test. it shall be verified that the reel is in the proper functional mode associated with each handle position. The manual control cable subassembly shall be inspected for conformance with MIL-C-7958.

4.4.3.4.1 Manual control cable subassembly performance demonstration.

4.4.3.4.1.1 Manual control cable subassembly (MA-1 type inertia reel) throw (stroke). The MA-1 type manual control cable subassembly, while attached to an MA-1 type manual control handle subassembly, shall be functioned to determine the distance of the throw (stroke) of the moveable element of the manual control cable. The manual control cable subassembly shall be inspected to verify compliance with Figure 12.

4.4.3.4.1.2 Manual control cable subassembly (MA-2 type inertia reel) throw (stroke). The MA-2 type manual control cable subassembly: while attached to an MA-2 type manual control handle subassembly, shall be functioned to determine the distance of the throw (stroke) of the moveable element of the manual control cable. The manual control cable subassembly shall be inspected to verify compliance with Figures 13 through 15. The manual control cable subassembly shall be removed and the other end connected to the manual control handle subassembly. The functioning shall be repeated to demonstrate that the manual control cable subassembly performs satisfactorily irrespective of which end is connected to the manual control handle subassembly.

4.4.3.4.1.3 Manual control cable subassembly (MA-6, MA-8, MA-14, and MA- 16 type inertia reels) throw (stroke). The M-6, MA-8, MA-14, and MA-16 type manual control cable subassemblies, while attached to all QPL MA-6, MA-8, MA-14, and MA-16 type manual control handle subassemblies, shall be functioned to determine the distance of the throw (stroke) of the moveable element of the manual control cable. The manual control cable subassembly shall be inspected to verify compliance with Figures 13 through 15. The flexible tubular casing shall be inspected to verify the conformance of the end fittings and threaded attachment nuts to Figure 15. The manual control cable subassembly shall be removed and the other end tonne.e~ed to the manual control handle subassemblj'. The functioning shall be repeated to demonstrate that the manual control cable performs satisfactorily irrespective of which end is connected to the manual control handle subassembly.

4.4.3.4.2 Manual control cable subassembly adjustability demonstration. For MA-6, MA-8, MA-14, and MA-16 type inertia reels. the interfacing point of attachment of [he manual control cable subassembly to the inertia reel housing subassembly. the control head. shall be rotated within the plane perpendicular to the take-up spool axis and then functioned to verify the capability of adjustment in a minimum of 12 positions without degradation below inertia reel performance requirements specified herein.

Downloaded from http://www.everyspec.com

4.4.3.4.3 Manual control cable subassembly interchangeability demonstration. The manual control cable subassembly shall be attached to all QPL inertia reel subassemblies and to all QPL manual control handle subassemblies and functioned to permit verification that the inertia reel performance (manual and automatic modes) meets the requirements specified herein. The manual control cable subassembly shall be operated each time it is mated to a different inertia reel or manual control handle to demonstrate performance without any degradation. The manual control cable shall be tested to verify compliance with the 25 pound load unlock test, environmental tests, and life cycle tests. The manual control cable shall be inspected to verify compliance with Figures 12 through 15, as applicable for each type of inertia reel configuration.

4.4.3.4.3.1 Manual control cable subassembly (MA-1 type inertia reel) interchangeability demonstration. The manual control cable subassembly for the MA-1 type inertia reel, shall be attached to all QPL MA-1 type inertia reels and all QPL MA-1 manual control handle subassemblies and functioned to verify interchangeability without modification. The manual control cable subassembly shall function in accordance with all requirements specified herein when mated with each of the QPL inertia reels and manual control handle subassemblies.

4.4.3.4.3.2 Manual control cable subassembly (MA-2 type inertia reel) interchangeability demonstration. The manual control cable subassembly for the MA-2 type inertia reel, shall be attached to all QPL MA-2 type inertia reels and all QPL MA-2 manual control handle subassemblies and functioned to verify interchangeability without modification. The manual control cable subassemblies shall function in accordance with all requirements specified herein when mated with each of the QPL inertia reels and manual control handle subassemblies.

4.4.3.4.3.3 Manual control cable subassembly (MA-6, MA-8, MA-14, and MA-16 type inertia reels) interchangeability demonstration. The manual control cable subassembly of any MA-6, MA-8, MA-14, and MA-16 type inertia reels, shall be attached to all QPL inertia reels of these types and all QPL manual control handle subassemblies of these types and functioned to verify interchangeability without modification. The manual control cable subassemblies shall function in accordance with all requirements specified herein when mated with each of the QPL inertia reels and manual control handle subassemblies.

4.4.3.4.4 Manual control cable subassembly load transmission demonstration. The manual control cable subassembly, while attached to an inertia reel and manual control handle subassembly, shall be functioned to verify the capability of the manual control cable subassembly to transmit manual control handle loads required to actuate the inertia reel locking mechanism when the cable or webbing lead-in strap is tensioned with a 25 pound load.

4.4.3.4.5 Manual control cable subassembly throw. The manual control cable subassembly, while attached to a manual control handle subassembly, shall be functioned to ascertain the manual control cable throw (stroke) distance produced through the attached manual control handle throw angle.

4.4.3.4.6 Manual control cable subassembly qualification. The manual control cable subassembly shall be subjected to the following tests/inspections when qualified only as a subassembly:

a. Dimensions (see Figures 12 - 15)

b. Materials (see 4.3).

c. Design and construction (see 4.4).

d. Manual control cable subassembly design inspection (see 4.4.3.4).

e. Cable throw (stroke) (see 4.4.3.4.1, 4.4.3.4.5).

f. Adjustability (see 4.4.3.4.2).

g. Interchangeability (see 4.4.3.4.3).

Downloaded from http://www.everyspec.com

h. Load transmission (see 4.4.3.4.4).

i. Environmental (see 4.5.5).

j. Life cycle (see 4.5.6.3).

k. Workmanship (see 4.8).

4.4.4 Dimensions. The inertia reel dimensions shall be inspected to verify conformance with Figures 1 through 15. as applicable.

4.4.5 Weight. The inertia reels shall be weighed to verify compliance with the allowable maximum weights specified herein.

4.5 Performance verification.

4.5.1 Automatic operation. The automatic locking characteristics of the inertia reel shall be demonstrated at no- lock and lock levels. The cable/webbing payout (see 6.4.2) shall be measured with respect to a reference point, along the cable/webbing. 2 inches from the centerline of the spool. Each test shall be repeated for all 4 mounting orientations in Figure 17. The acceleration onset shall be calculated by the procedures shown in Figures 18 and 19. Test data shall be measured and recorded as a function of time using wideband techniques in accordance with SAE J211, Class 60 instrumentation system requirements. The filtering level shall be 300 Hz for inertia reel acceleration and webbing displacement measurements.

4.5.1.1 Unidirectional inertia reel acceleration (MA-1 type inertia reel).

4.5.1.1.1 No-lock test. The inertia reel cable or webbing lead- in strap. as applicable, shall be fixed at an extension of 3 inches and with the control handle in the "auto-lock" position, then the inertia reel shall be subjected to a peak rearward longitudinal acceleration of 1.5 G $^{+0.0}_{-0.2}$ G with an onset rate of between 75 and 300 G/see. The test shall then be repeated using an onset rate between 300 and 500 G/sec. Both tests shall be repeated with the cable or webbing lead-in strep. as applicable. fixed at a 12 inch extension and the inertia reel accelerated at 1.0 G. The inertia reel shall not lock in any of the above tests.

4.5.1.1.2 Lock test. Locking capability shall be demonstrated by exposing the inertia red, with the cable or webbing lead-in strap, as applicable, fixed at an extension of 3 inches and with the control handle in the "auto-lock" position. to a rearward longitudinal acceleration of between 3.0 and 3.5 G with an onset rate of between 75 and 300 G/sec. The test shall be repaired with an onset rate between 300 and 500 G/sec. Both tests shall be repeated with the cable or webbing lead-in strap, as applicable, fixed at an extension of 12 inches. These accelerations shall lock the inertia reel. Once the inertia reel is locked, the cable payout shall not extend more than 0.5 inch or webbing payout shall no(extend more than 1 inch when a load of 25 to 100 pounds is applied to the cable or webbing. Once the inertia reel locks, it shall unlock when the control handle is cycled to the "manual-lock" position and back to the "auto-lock" position.

4.5.1.2 Multidirectional cable/webbing lead-in strap acceleration (MA-2, MA-6 and MA-8 type inertia reels).

4.5.1.2.1 No-lock test. The inertia reel cable or webbing lead- in strap, as applicable, at an extension of 3 inches and with the control handle in the "auto-lock" position. shall be subjected to a peak acceleration of 1.5 G $^{+0.0}_{-0.2}$ (G with an onset rate of between 75 and 300 G/sec. The test shall then be repeated using an onset rate between 300 and 500 G/Sec. Both tests shall be repeated with the cable or webbing lead-in strap, as applicable, extended 12 inches and the webbing acceleration of 1.0 G. The inertia reel shall not lock in any of the above tests.

Downloaded from http://www.everyspec.com

4.5.1.2.2 Lock test. Locking capability shall be demonstrated by exposing the inertia reel cable or webbing lead-in strap, as applicable, at an extension of 3 inches and with the control handle in the "auto-lock" position, to a cable or webbing acceleration of between 3.0 and 3.5 G with an onset rate of between 75 and 300 G/sec. The test shall be repeated with an onset rate between 300 and 500 G/sec. Both tests shall be repeated with the cable or webbing lead-in strap, as applicable, extended 12 inches. These accelerations shall lock the inertia reel. The cable payout shall not exceed 1 inch or the webbing payout shall not exceed 1.5 inches. For measurement purposes, the force exerted on the lead- in cable or webbing after locking shall be between 25 and 100 pounds. Once the inertia reel locks, it shall unlock when the control handle is cycled to the "manual- lock" position and back to the "auto-lock" position.

4.5.1.3 Omnidirectional webbing lead-in strap and inertia reel acceleration (MA-14 and MA-16 type inertia reels).

4.5.1.3.1 Omnidirectional webbing lead-in strap acceleration.

4.5.1.3.1.1 No-lock test. The inertia reel webbing lead-in strap, at an extension of 3 inches and with the control handle in the "auto-lock" position, shall be subjected to a peak acceleration of 1.5 G $^{+0.0}_{-0.2}$ G with an onset rate of between 75 and 300 G/sec. The test shall then be repeated using an onset rate between 300 and 500 G/sec. Both tests shall be repeated with the webbing lead-in strap extended 12 inches and the webbing acceleration of 1.0 G. The inertia reel shall not lock in any of the above tests.

4.5.1.3.1.2 Lock test. Locking capability shall be demonstrated by exposing the inertia reel webbing lead-in strap, at an extension of 3 inches and with the control handle in the "auto-lock" position, to a webbing acceleration of between 3.0 and 3.5 G with an onset rate of between 75 and 300 G/sec. The test shall be repeated with an onset rate between 300 and 500 G/sec. Both tests shall be repeated with the webbing lead-in strap extended 12 inches. These accelerations shall lock the inertia reel. The webbing payout shall not exceed 1.5 inches. For measurement purposes, the force exerted on the lead-in webbing after locking shall be between 25 and 100 pounds. Once the inertia reel locks, it shall unlock when the control handle is cycled to the "manual-lock" position and back to the "auto-lock" position.

4.5.1.3.2 Omnidirectional inertia reel acceleration. With the inertia reel webbing lead-in strap at an extension of 3 inches and with the control handle in the "auto-lock" position, the inertia reel shall undergo 3 acceleration tests. The webbing position shall be fixed relative to the inertia reel during these tests. The first test shall have a peak acceleration of 3.0 to 4.0 G, an onset rate of 300 to 700 G/sec, and a velocity change of 0.7 to 1.8 ft/sec. The second test shall have a peak acceleration of 6.0 to 7.0 G, and an onset rate of 300 to 700 G/sec. The velocity change is left arbitrary. The third test shall have a peak acceleration of 8.0 to 12.0 G, an onset rate of 300 to 700 G/sec, and a velocity change of 2.9 to 15.5 ft/sec. All acceleration vectors shall lie in the plane perpendicular to the axis of the spool. These tests shall be repeated with all the same test conditions, except that the acceleration vector shall be rotated 90° in the plane perpendicular to the axis of the spool. The direction of acceleration along each axis shall be alternated in each series of tests. The webbing shall not lock with an acceleration of less than 4.0 G and shall lock when the acceleration exceeds 6.0 G. Once the inertia reel locks, the webbing shall not extend more than 1 inch when a load of 25 to100 pounds is placed on the webbing. The inertia reel shall be unlocked when the manual control handle is cycled to the "manual-lock" position and back to the "auto-lock" position.

4.5.1.4 Omnidirectional inertia reel assembly lateral acceleration (MA-16 type inertia reel). In addition to the acceleration tests specified (see 4.5.1.3), the MA-16 inertia reel shall also be exposed to accelerations in the direction of the spool axis. The inertia reel, with the webbing lead-in strap fixed relative to the inertia reel at an extension of 3 inches and with the control handle in the "auto-lock" position, shall be subjected to 3 tests. The first test shall have a peak acceleration of 3.0 to 4.0 G, an onset rate of 300 to 700 G/sec, and a velocity change of 0.7 to 1.8 ft/sec. The second test shall have a peak acceleration of 6.0 to 7.0 G, and an onset rate of 300 to 700 G/sec. The velocity change is left arbitrary. The third test shall have a peak acceleration of 8.0 to 12.0 G, an onset rate of 300 to 700 G/sec, and a velocity change of 2.9 to 15.5 ft/sec. All acceleration vectors shall be parallel to the spool

Downloaded from http://www.everyspec.com

axis with the direction alternated in each series of tests. The webbing shall not lock with an acceleration of less than 4.0 G and shall lock when the acceleration exceeds 6.0 G. Once the inertia reel locks, the webbing shall not extend more than 1 inch when a load of 25 pounds is placed on the webbing. The inertia reel shall be unlocked when the manual control handle is cycled to the "manual-lock" position and back to the "auto-lock" position.

4.5.1.5 Dual mode inertia reels demonstration. When a dual mode inertia reel is being qualified the tests shall be conducted with one of the modes disabled to demonstrate that each mode of the dual mode type inertia reel functions independently. These tests shall then be repeeated with the other mode disabled to demonstrate that the second mode also functions independently.

4.5.2 Flight Performance simulation tests. Flight simulation tests are required for all types of inertia reels. The tests shall consist of subjecting inertia reels, while in the automatic locking mode, to simulated flight operational environments including the concurrent application of steady state acceleration from a centrifuge, vibratory acceleration using an excitation device, and cyclic cable/webbing motion. In addition, the Government Qualifying Activity may perform flight testing to confirm, or in lieu of any or all of the flight simulation conditions.

4.5.2.1 Flight simulation conditions. Two inertia reels, 1 environentally conditioned, shall be subjected to the flight simulation conditions. Nine tests are required to evaluate inertia reel performance in the 3 mounting orientations of Figure 20. For each of the 3 mounting orientations, the steady state acceleration vector shall have a resultant rnagnitude of 3.5 G. applied to the inertia reel in the vertical axis (Z) of the aircraft coordinate system as shown in Figure 16. The vibratory acceleration shall be applied in each of the 3 orthogonal directions with a sinusoidal sweep over a frequency range of 4 to 60 HZ. The vibration amplitude shall be 0.20 G from 4 to 10 HZ, and 0.50 G from 10 to 60 HZ. Each vibration sweep shall be applied over a time period of not less than 7 minutes. Each MA-1, MA-2, MA-6, and MA-8 type inertia reel shall include a standard 18 inch length of cable/webbing attached to and wound on the drum/spool. as applicable. The MA-14 and MA-16 type inertia reels shall include a standard 24 inch length of webbing attached 10 and wound on the spool. For each test, the exposed end of the inertia reel cable/webbing shall be attached to a device which continuously cycles the Cable/webbing in and out of the inertia reel. The cycling shall simulate occupant motion and permit detection of inertia reel locking. The cycling rate shall be 30 cycles per minute with a displacement amplitude of ±3.0 inches. The inertia reel shall remain unlocked throughout the duration of all 9 tests.

4.5.3 Stowage/take-up mechanism force demonstration.

4.5.3.1 Cable drum (MA-1 and MA-2 type inertia reels) extension/retraction test. The force required to extend the cable of a MA-1 and MA-2 type inertia reel shall be measured during the first 17 inches of cable extension. The force shall be measured again as the cable is extended from 17 inches to full extension. The retracting force shall be measured during retraction of the fully extended cable to 17 inches of cable extension and again measured as the cable is retracted from 17 inches to full retraction. This extension/retraction test shall be conducted 3 times for reproducibility. The inertia reel shall be activated to lock at 5 random extensions to demonstrate that the drum is capable of locking the cable in increments of 0.50 inch or less. The extension and retraction forces shall be as specified (see 3.5.3.1).

4.5.3.2 Rotating spool (MA-6, MA-8, MA-14, and MA-16 type inertia reels) extension/retraction test. The force required to extend the webbing of MA-6, MA-8, MA-14, and MA-16 type inertia reels shall be measured during the first 17 inches of webbing extension. The force shall be measured again as the webbing is extended from 17 inches to full extension. The retracting force shall be measured during retraction from the full extension to 17 inches of webbing extension and again measured as the webbing is retracted from 17 inches to full retraction The inertia reel shall be activated to lock at 5 random extension to demontstrate that the rotating spool is capable of locking the webbing in increments of 0.50 inch or less. The extension and retraction forces shall be as specified (see 3.5.3.2).

Downloaded from http://www.everyspec.com

4.5.4 Proof strength tests. Inertia reels, including the mounting provisions, cable/webbing, and terminal end fittings shall be subjected to a static proof strength load. With the control handle in the "manual-lock" position, a static load shall be applied for a period of 60 seconds to the shoulder harness attachment cable or webbing fitting with a spring dynamometer or standard testing machine. Upon removal of the load, the inertia reel shall operate freely, allowing the shoulder harness cable or webbing to reel out when the control handle is cycled to unlock the inertia reel. Recalibration is allowed at this time as necessary. Following the proof strength test, the inertia reels shall be subjected to the tests specified (see 4.5.1 and 4.4.3.3 excluding 4.4.3.3 subparagraphs). Inertia reels having more than 1 locking mechanism shall be subjected to the proof strength requirements for each locking mechanism.

4.5.4.1 Proof strength test of the MA-1, MA-2, and MA-6 type inertia reels. These types of inertia reels shall be subjected to a static load of 2,660 pounds for a duration of 60 seconds without failure.

4.5.4.2 Proof strength test of the MA-8, MA-14, and MA-16 type inertia reels. These types of inertia reels shall be subjected to a static load of 3,330 pounds for a duration of 60 seconds without failure.

4.5.5 Environmental tests. For all inertia reel types, except the MA-14 and MA-16, 6 inertia reel assemblies shall be subjected to each of the environmental tests, MIL-STD-810, and 2 inertia reel assemblies to the fungus test, MIL-STD-810, in the order specified in Table IA. For the MA-14 and MA-16 type inertia reel, 10 inertia reel assemblies shall be subjected to each of the environmental tests, and 2 inertia reel assemblies to the fungus test, MIL-STD-810, in the order specified in Table IB. When qualifying inertia reel subassemblies, 5 subassemblies shall be subjected to the environmental tests and then the subassemblies shall be attached to a QPL inertia reel assembly for the post-tests. All inertia reel assemblies shall be tested with the cable/webbing extended 25 percent. Following environmental conditioning, the inertia reel assemblies shall be subjected to the tests specified (see 4.5.1, 4.5.3.1 or 4.5.3.2 as applicable, and see 4.4.3.3 excluding 4.4.3.3 subparagraphs). Following completion of all environmental conditioning and the post-conditioning tests, the inertia reel assemblies shall be visually inspected for corrosion, cracking, or other anomalous conditions and each such condition fully documented, including, where appropriate, photographic documentation.

4.5.5.1 High temperature. High-temperature tests shall be in accordance with Method 501, Procedures I and II of MIL-STD-810, for the induced conditions under the Hot climate category as shown in Table 501.3-I. Temperatures used in the cycle shall be adjusted proportionally for the peak temperatures herein specified. The storage high temperature shall be 230°F for a duration of 7 cycles (168 hours). The operational high temperature shall be 170°F for a duration of 3 cycles (72 hours). Following the storage high temperature exposure, the inertia reel assemblies or subassemblies shall be returned to ambient temperature and subjected to post-tests specified (see 4.5.5). Following the operating temperature exposure and while at 170°F, the inertia reel assemblies or subassemblies shall be subjected to post-tests specified (see 4.5.5). The tests shall be completed within 10 minutes of removal from the chamber, or the inertia reel assemblies or subassemblies shall be reconditioned for a minimum of 1 hour after reaching the chamber temperature of 170°F and the post-tests continued.

4.5.5.2 Low temperature. Low-temperature tests shall be conducted in accordance with Method 502, Procedures I and II of MIL-STD-810. The test temperature shall be -65°F for storage with a duration of 72 hours. Following the storage low temperature test, the inertia reel assemblies or subassemblies shall be returned to ambient temperature and subjected to post-tests specified (see 4.5.5). The operational test temperature shall be -40°F for a 6 hour duration. Following the operational temperature exposure and while at -40°F, the inertia reel assemblies or subassemblies shall be subjected to post-tests specified (see 4.5.5). The tests shall be completed within 10 minutes of removal from the chamber, or the inertia reel assemblies or subassemblies shall be reconditioned for a minimum of 1 hour after reaching the chamber temperature of -40°F and the post-tests continued.

4.5.5.3 Humidity. Humidity tests shall be in accordance with Method 507 of MIL-STD-810, Procedure II, Hazardous test items, Cycle 4 in accordance with Tables 507.3-I and 507.3-II with a duration of 30 days. After exposure to the humidity test, the inertia reel assemblies or subassemblies shall be subjected to post-tests specified (see 4.5.5).

Downloaded from http://www.everyspec.com

4.5.5.4 Fungus. Two inertia reel assemblies or subassemblies, not previously exposed to any other environments, shall be subjected to fungus-resistance tests for a duration of 28 days in accordance with Method 508 of MIL-STD-810. After exposure to the test, the inertia reel assemblies or subassemblies shall be subjected to post-tests specified (see 4.5.5). After completion of all tests, the inertia reel assemblies or subassemblies shall be disassembled. Any evidence of fungus growth is a failure.

4.5.5.5 Salt fog. The inertia reel assemblies or subassemblies shall be tested in accordance with the salt fog tests of Method 509 of MIL-STD-810. The test procedure shall be modified by the injection of sulfur dioxide gas into the test chamber at 6 hour intervals for a time duration of 60 minutes and a flow rate at standard conditions of 50 cubic centimeters per hour per cubic foot of test chamber volume for a total salt fog duration of 24 hours. The salt fog exposure shall be followed by a 24 hour drying time and then the cycle repeated for a total test time of 96 hours. After exposure to the tests. the inertia reel assemblies or subassemblies shall be subjected to post-tests specified (see 4.5.5).

4.5.5.6 Sand and dust. The inertia reel assemblies or subassemblies shall be tested in accordance with Method 510, Procedures I and 11 of MIL-STD-810. The temperature for the sand test shall be 170°F for a duration of 12 hours. The temperature for the dust test shall be 73°F for a duration of 24 hours. After exposure to the tests, the inertia reel assemblies or subassemblies shall be subjected to post-tests specified (see 4.5.5).

4.5.5.7 Vibration. Vibration tests shall be in accordance with Method 514, Categories 1,4,5, and 6. With the inertia reel in the "auto-lock" position and unlocked, it shall be subjected to vibration along 3 muiurdly-perpendicular axes. At each position, the inertia red assemblies shall be subjected m vibration throughout the range specified. Throughout this vibration, the inertia reel shall not lock. The test parameters for each of the categories follows:

a. Category 1. The inertia reel assemblies shall be mounted in a packaged shipping configuration on the vibration fixture using restraints and tie-downs typical of actual ground transport conditions. Excitation shallbe applied along 3 mutually-perpendicular axes for a duration of 3 hours/axis. The random vibration spectrum for this test is found in Figure 514.4-1.

b. Category 4. The inertia reel assemblies shall be mounted in a vibration fixture similar to the actual service installation. The setup shall use the actual mounting provisions from the aircraft. The value of F_1 shall equal 68 Hz (frequency of a C-130). The value of L_1 shall equal 0.3 g^2/Hz. The inertia reel assemblies shall be vibrated for one (1) hour/axis following the vibration spectrum given in Figure 514.4-7.

c. Category 5. The inertia reel assemblies shall be mounted in the same manner as in Category 4. The inertia reel assemblies shall be vibrated for 1 hour/axis using the vibration spectrum given in Figure 514.4-8. The value of W_0 shall be equal to 0.04 g^2/Hz as determined by the criteria in Table 514.4-111.

d. Category 6. The inertia reel assemblies shall be mounted in the same manner as in Category 4. The inertia reel harmonic frequencies shall be determined by performing a resonance search on the inertia reel. Resonant frequencies of the inertia reel from 0 to 50 Hz shall be determined by conducting a resonance search and vibrating 0.5 hour at each of the 4 worst resonant frequencies. This test shall be conducted with the inertia reel mounted on each of the 3 orthogonal axes.

After completion of each of the vibration environment categories the inertia reel assemblies shall be subjected to post-tests specified (see 4.5.5).

4.5.6 Life cycle tests For all inertia reel types. 4 inertia reel assemblies shall be subjected to each of the tests described in the following paragraphs. Inertia reels subjected to the life cycle tests shall be disassembled at the end of the qualification testing and inspected to assess the amount of wear on the external and internal inertia reel assembly components.

Downloaded from http://www.everyspec.com

4.5.6.1 Stowage/take-up mechanism life cycle test. The inertia reel stowage/take-up mechanism shall be cycled 60,000 times by pulling the take-up cable/webbing to the required extension and allowing it to return to the fully-retracted position. The cycle distribution shall be as follows for the full 60,000 cycles:

a. 36,000 cycles 0 to 0.25 full extension.

b. 12,000 cycles 0 to 0.50 full extension.

c. 6,000 cycles 0 to 0.75 full extension.

d. 6,000 cycles 0 to full extension.

At least 10,000 cycles shall be completed with the axis of the cable or webbing extended at an angle of 30^0 lateral or vertical from the axis of the cable or webbing at the point where they enter the inertia reel housing. The cycles shall be completed in sets of 120 cycles composed of 72 cycles of 0 to 0.25 full extension, 24 cycles of 0 to 0.50 full extension, 12 cycles of 0 to 0.75 full extension and 12 cycles of 0 to full extension. After every 120 cycles, the cable or webbing shall be fully extended, the control handle placed in the "manual-lock" position, and the cable allowed to retract with a resisting tension of at least 2 pounds. Before the extension and retraction test is begun, at 24,000 and 48,000 cycles, and after completion of the test, the cable or webbing shall be fully extended, the control handle placed in the "manual-lock" position, and the maximum cable or webbing movement measured at 4 different positions of extension to determine that the movement does not exceed 0.50 inch. After completing the tests, the inertia reel shall demonstrate compliance (see 4.5.1, 4.5.3.1, or 4.5.3.2 as applicable, and 4.4.3.3 excluding 4.4.3.3 subparagraphs). There shall be no evidence of excessive wear on the external or internal surfaces of the inertia reel mechanism. The inertia reel shall then be subjected to the proof strength test specified (see 4.5.4) and meet the operating conditions described within the paragraph.

4.5.6.2 Shoulder harness attachment cable terminal fitting life cycle test. For MA-1 and MA-2 type inertia reels, the inertia reel cable shall be fully retracted and bent until the axis of the cable terminal is inclined at an angle of 30° with the axis of the cable at the point where the cable enters the inertia reel housing. Maintaining this angle, the cable terminal fitting shall be rotated, generating a conical surface, about the axis of the cable at the point where the cable enters the inertia reel housing. Each 360° of rotation shall constitute 1 cycle. The fitting shall be subjected to 5,000 cycles with the control handle in the "auto-lock" position, and to 5,000 cycles with the control handle in the "manual-lock" position. After each 100 cycles, the cable shall be fully extended and permitted to return to the retracted position. Upon completion of this 10,000 cycle test, the inertia reel shall be subjected to the proof strength test specified (see 4.5.4). The cable and terminal fitting shall then be visually inspected, and there shall be no evidence of breakage or excessive wear on either the cable or the terminal fitting.

4.5.6.3 Manual control cable and handle subassembly life cycle test. With the inertia reel and manual control cable and handle subassemblies on a simulated mounting, the manual control mechanism shall be subjected to 25,000 cycles of locking and unlocking. Each cycle shall consist of moving the manual control handle from the "manual-lock" position to the "auto-lock" position and back. Upon completion of this test, the inertia reel shall be tested as specified (see 4.5.1, 4.5.3.1, or 4.5.3.2 as applicable, and 4.4.3.3 excluding 4.4.3.3 subparagraphs).

4.5.7 Design static strength test.

4.5.7.1 Design static strength of inertia reels. The design static strength test shall be conducted on 6 inertia reels, including 2 that were previously subjected to the environmental tests, as identified in Table I. The inertia reels shall be at full retraction and locked by placing the control handle into the "manual-lock" position. The inertia reel shall not fail structurally. For inertia reels having 2 separate locking mechanisms for the "manual-lock" and "auto-lock", this test shall be conducted for each locking mechanism.

Downloaded from http://www.everyspec.com

4.5.7.1.1 Design static strength of MA-1, MA-2. and MA-6 type inertia reels. These types of inertia reds shall be subjected to a design static load of 4,000 pounds applied to the shoulder harness cable or webbing, at full retraction and locked. for a period of 60 seconds without failure.

4.5.7.1.2 Design static strength of MA-8, MA-14, and MA-16 typc inertia reels. These types of inertia reels shall be subjected to a design static load of 5,000 pounds applied to the shoulder harness webbing, at full retraction and locked, for a period of 60 seconds without failure.

4.5.7.2 Design static strength of webbing. The webbing. excluding its terminal end and attachment fitting, shall be grasped at each end, and loaded to a design static load of 8,000 pounds for 60 seconds without failure, and then loaded to destruction.

4.5.8 Dynamic crash tests. For all inertia reel types, except the MA-14 and MA-16 types, II inertia reels shail be dynamically crash tested to the conditions specified in Tables IV and V. Four of the 11 inertia reels shall previously have been environmentally conditioned. For the MA-14 and MA-16 type inertia reel, 22 inertia reels shall be dynamically crash-tcsted to the conditions specified in Tables IV and V. Eight of the 22 inertia reels shall previously have been environmentally conditioned. All inertia reel types, except for the MA-14 and MA-16 types, shall be dynamically tcstcd to the horizontal and combined crash test conditions (impact conditions A and B of Tables IV and V). The MA-14 and MA-16 type inertia reels shall be dynamically tested to all impact conditions defined in Table IV. For each test. the inertia reel shall be installed on a fixture which simulates its operational environment. including a seat fixture. aircrew restraint system, and anthropomorphic dummy as shown in Figure 21 and as specified herein. Selected inertia reels shall be environmentally and operationally preconditioned prior to dynamic crash tests as specified in Tables IA or IB, as applicable. The inertia reels shall be tested in the automatic locking mode, and shall include the manual control cable subassembly, lock/unlock lever, and standard attachment fasteners. To verify compliance with Tables IA or IB, as applicable, inertia reel performance shall be monitored with electronic instrumentation during each test. Data shall include linear payout of the inertia reel cable or webbing. Linear payout of the cable/webbing shall be measured from the point where the cable/webbing exits the inertia reel housing subassembly. The data shall be measured and recorded as a function of time in accordance with SAE Handbook. Section SAE J211, Class 60 instrumentation system requirements.

4.5.8.1 Seat fixture. The seat fixture shall consist of a rigid seat bucket and floor attachment structure, with seat bottom and seat back dimensions as shown in Figure 22. The seat pitch angle for the seat fixture shall be 90° Mounting provisions shall be included on the seat for installation of the inertia reel and restraint system as shown in Figure 20, as appropriate for each type of inertia reel. .4 seat bottom cushion shall be used which has 2 thickness of between 0.50 and 0.75 inch when compressed by the seated dummy occupant. Seat rigidity shall be such that no point on the primary scat structure deflects more than 0.50 inch during the dynamic tests.

4.5.8.2 Restraint system. The restraint system shall include a strap configuration as shown in Figure 21. The restraint may be either a qualified operational restraint system meeting the requirements of MIL-S-58095, MIL-S-81771, or a representative test restraint constructed for the purposes of this test. Full details of the restraint system shall be included in the test plan. If a representative restrain(is used, it shall meet the dimensioned, strength and elasticity requirements of MIL-S-58095 or MIL-S-81771. However, the adjusters and buckle can be replaced with continuous straps and stiiched joints to allow multiple test use, as long as other provisions are made to ensure representative fitting and dynamic behavior of the harness throughout (he duration of the test program. If strap length adjusters are used. webbing slippage at each adjuster shall not exceed 0.50 inch during each test.

4.5.8.3 Anthropomorphic dummy. Each test shall be performed with a 95th percentile, VIP-95, Hybrid III, or ADAM type test dummy weighed to 250 pounds. The dummy's feet shall be secured in a position representing placement on an aircraft primary flight rudder pedal, or anti-torque pedal controls, or as in an appropriate crew station.

4.6 Lubrication. Any lubrication used on the inertia reel shall be inspected to demonstrate compliance with HDBK-STD-275.

Downloaded from http://www.everyspec.com

4.7 Identification of product. Identification marking shall be inspected to demonstrate compliance with 3.7 and MIL-STD-130.

4.7.1 Permanent identification of inertia reel. The housing of the inertia reel shall be inspected for the stamp imprinted with the serial number and date of manufacture to coincide with the serial number of the permanently attached nameplate.

4.7.2 Anti-Tampering seal. The inertia reel shall be inspected for the anti-tampering seals affixed to primary unit entry points.

4.8 Workmanship. The inertia reel assembly and subassemblies, including all detail parts, shall be inspected to demonstrate that the inertia reel is free from defects which could affect proper functioning of the complete unit in service.

4.9 Quality program survey. As part of the qualification process, but prior to the manufacture of the qualification inertia reel assemblies, the Government shall conduct a quality audit in accordance with MIL-Q-9858 and MIL-I-45208 Any deficiencies noted shall be resolved and approved corrective action implemented prior to the manufacture of qualification inertia reel assemblies.

4.10 Service life demonstration. Service life shall be demonstrated by the successful completion of the environmental conditionings, including the post-tests and completion of the life cycle tests, including post-test disassembly to verify the lack of excessive wear.

4.11 Safety of equipment inspection. The inertia reels shall be inspected to comply as specified (see 3.11).

4.12 Inspoection of packaging. Preservation and packaging, packing, and marking shall be inspected to assure compliance with section 5 of this specification.

5. PACKAGING

5.1 Preservation. The preservation shall be Level A, B or Commercial, as specified (see 6.2).

5.1.1 Level A. Inertia reeks shall be packaged per Method III of MIL-P-116 in a snug-fitting fiberboard box conforming to W6s or W6c of PPP-B-636 Each inertia reel shall be wrap-peal with a suitable material in a manner to protect the box from puncture or other damage and to immobilize the inertia reel within the container.

5.1.1.1. Intermediate packaging. No more than 10 unit packages shall be placed in fiberboard containers conforming to domestic class of PPP-B-636, As much as possible, intermediate containers shall contain a like number of unit packages.

5.1.2 Level B. Inertia reels shall be packaged as for Level A. including intermediate containers. except that the unit containers need not exceed paperboard boxes conforming to PPP-B-566 or PPP-B-676.

5.1.3 Commercial. The inertia reels shall be packaged in accordance with ASTM D-3951-90.

5.2 Packing. Packing shall be Level A. B. or Commercial, as specified (see 6.2).

5.2.1 Level A. Shipments shall be packed in snug-fitting wood- cleatrd plywood boxes conforming to Grade A of PPP-B-601. Gross weight of the boxes shall not exceed 200 pounds.

5.2.2 Level B. Shipments shall be packed in snug-fitting fiberboard boxes conforming to V3S, V4S or V3C of PPP-B-636.

Downloaded from http://www.everyspec.com

5.2.3 Commercial. Inertia reels preserved as specified (see 5.1) shall be packed in accordance with ASTM D-3951.

5.3 Marking. In addition to any special marking required by the contract or order, shipping containers shall be marked in accordance with MIL-STD-1 29 or ASTM D-3951, as applicable.

6. NOTES

(This section contains information of a general or explanatory nature that maybe helpful. but is not mandatory.)

6.1 Intended use. The shoulder harness take-up, inertia-lock reel is intended as a safety device for seat occupants to restain torso and head/neck movement during a crash. deceleration. or violent flight motion of an aircraft.

6.2 Specific applications. Each specific application of the QPL inertia reel shall require the inertia reel be subjected to "as installed" system testing tailored to evaluate the suitability of the QPL inertia reel for the intended application. Such evaluation cannot occur without the inertia reel being either on a QPL or satisfactorily completing the qualification testing required herein prior to the evaluation. Qualification of an inertia reel to 1 type of designation shall not be constructed as qualification m any other type designation contained in this specification. Nor shall the approval of an inertia reel for a particular application be construed as approval for any other application not specifically identified in that approval.

6.1.1.1 Procedures. Approval of an inertia reel for a specific airmail application requires review and approval of the service tests (see 4.2.2) by both the Government Qualifying Activity for inertia reels and the Cognizant Engineering Activity or Configuration Manager for the aircraft.

6.2 Acquisition requirements. Acquisition documents must specify the following:

a. Title. number, and date of this specification.

b. Type of inertia reel required (see 1.2).

c. Dimension "A" (see Figures 1 through 3 and 6.2.1a).

d. Dimension "B" (see 6.2 1b).

e. If service test samples are required, instructions for submittal (see 3.2.2 and 4.2.2).

f. Level of packing required (see 5.2).

g. Whether special marking for shipment is required (see 5.3).

h. Data requirements. if any (see 6.5).

6.2.1 Dimensions. For specific aircraft installations. the procuring activity should specify:

a. Dimension "A" on Figures 1 through 3, as applicable, shall be 0.0 inch plus any number of 2 inch increments until a length of 20 inches is reached, or 20 inches pi us any number of 5 inch increments thereafter.

b. Dimension "B" on Figures 1 through 3, as applicable, shall be 14 inches plus any number of 2 inch increments until a length of 30 inches is reached. or 30 inches plus any number of 5 inch increments thereafter.

Downloaded from http://www.everyspec.com

6.3 Consideration of data requirements. The following data requirements should be considered when this specification is applied on a contract. The applicable Data Item Descriptions (DID's) Should be reviewed in conjunction with the specific acquisition to ensure that only essential data are requested/provided and that the DID's are tailored to reflect the requirements of the specific acquisition. To ensure correct contractual application of the data requirements, a Contract Data Requirements List (DD Form 1423) must be prepared to obtain the data, except where DOD FAR Supplement 27.475-1 exempts the requirement for a DD Form 1423.

Reference Paragraph	DID Number	DID Title
4.2.3.2	DI-T-2072	Report, Test

The above DID's were cleared as of the date of this specification. The current issue of DOD 5010.12-L, Acquisition Management Systems and Data Requirements Control List (AMSDL), must be researched to ensure that only current, cleared DID's are cited on the DD Form 1423.

6.4 Definitions

6.4.1 Cable/webbing extension An initial length of cable/webbing extended from the fully retracted cable/webbing position. Extension is used as a condition prior to a test run.

6.4.2 Cable/webbing payout. The length of cable/webbing extended from an inertia reel during an acceleration pulse. Payout is used as a test measurement for evaluation of functional operation.

6.4.3 Cognizant engineering activity. Government activity responsible for specific aircraft seat system.

6.4.4 Configuration management authority. Government activity responsible for confirmation control of the specific aircraft seat system.

6.4.5 Design static load. Design static load is less than the item ultimate load. It is a load at which the inertia reel shall remain functional.

6.4.6 Dual mode. Inertia reels which apply two sensing methods, such as strap acceleration and vehicle acceleration, to engage the locking mechanism(s). The sensing methods are independent of each other providing total redundancy.

6.4.7 Flight critical componenets/subassemblies designation. The flight critical components/subassembies are defined as elements of the component/subassembly design which are critical to the correct, rapid and complete functioning of the inertia reel; require unique skill or capability to manufacture and require extreme attention to tolerances and/or other quality assurance aspects of manufacture for the intia reel to operate as spcified herein. This designation is in accordance with NAVAIR Instruction 4200.25.

6.4.8 Government Qualifying Activity. Government activity responsible for qualification, SA-ALC/LDIE.

6.4.9 Government Verifying Activity. Government activity tasked to conduct the service tests during the qualification.

6.4.10 Multidirectional inertia reel. Inertia reels which automatically lock when the aircraft is subjected either to a longitudinal acceleration, a transverse acceleration, or combination thereof.

6.4.11 Omnidirectional inertia reel. Inertia reels which automatically lock when the aircraft is subjected to either a longitudinal acceleration, a transverse acceleration, a latitudinal acceleration, or combination thereof.

6.4.12 Unidirectional inertia reel. Inertia reels which automatically lock when subjected to rearward longitudinal acceleration of the aircraft.

Downloaded from http://www.everyspec.com

6.5 Qualification. With respect to products requiring qualification. awards will be made only for products which are, at the time of award of contract, qualified for inclusion in Qualified Products List QPL-8236 whether or not such products have actually been so listed by that date. The attention of the contractors is called to these requirements, and manufacturers are urged to arrange to have the products that they propose to offer to the Federal Government tested for qualification in order that they maybe eligible to be awarded contracts or purchase orders for the products covered by this specification. The activity responsible for the Qualified Products List is SA-ALC/LDIE-L, 485 Quentin Roosevelt Rd. Suite 7, Kelly AFB, TX 78241-6426, and information pertaining to qualification of products maybe obtained from that activity.

6.5.1 Provisions Governing Qualification SD-6. Copies of the SD-6 may be obtained upon application to Standardization Document Order desk. Building 4D. 700 Robbins Avenue, Philadelphia. PA 19111-5094.

6.6 Part or identifying Number (PIN). The PIN is as follows:

M 8236 - H1 Example of PIN: M8236-HI

H1 — Control handle for MA-1 reel (see table VI)

8236 — Specification number

M — An item defined by inch-pound units

TABLE VI. Dash numbers and component

Reels		Manual control handle	Manual control cable	Webbing lead-in strap
MA-1	1	H1	C? (see figure 9)	N/A
MA-2	2	H2	C? (see figure 10)	N/A
MA-6	6	H3	C? (see figure 11)	W? (see figure 3)
MA-8	8	H3	C? (see figure 11)	W? (see figure 3)
MA-14	14	H3	C? (see figure 11)	W? (see figure 3)
MA-16	16	H3	C? (see figure 11)	W? (see figure 3)

The question mark would be replaced with the length of the cable or webbing.

6.7 Subject term (keyword) listing.

Acceleration
Automatic inertia locking mechinism
Certification
Flight critical components
Housing subassembly
Human restraint
Inertia-lock reel
Locking mechanism
Multidirectional
Omnidirectional
Unidirectional

Downloaded from http://www.everyspec.com

6.8 Changes from previous issue. Marginal notations are not used in this revision to identify changes with respect to the previous issue due to the extensiveness of the changes.

TABLE IX. MA-1, MA-2, MA-6 and MA-8 type inertial reel qualification test matrix

	1	2	3	4	5	6	7	8	9	10	11	12	13	14	15	16	17	18	19
REVIEW DRAWING/MATERIALS/PROCESSES (4.3, 4.4.1)	X	X	X	X	X	X	X	X	X	X	X	X	X	X	X	X	X	X	X
DESIGN VERIFICATION (4.4)	X	X	X	X	X	X	X	X	X	X	X	X	X	X	X	X	X	X	X
PARTS INTERCHANGE DEMONSTRATION (4.4.2)															X	X	X		
SUBASSEMBLY INTERCHANGE AS REQUIRED (4.4.3 SUBS)	X	X	X																
PROOF LOAD AND RECALIBRATE (4.5.4)	X	X	X	X	X	X	X	X	X	X	X	X	X	X	X	X	X	X	X
CATEGORY I VIBRATION (4.5.5.7)	X	X	X	X										X	X				
VISUAL EXAM (4.2.3.1, 4.2.3.2)	X	X	X	X	X	X	X	X	X	X	X	X	X	X	X	X	X	X	X
DIMENSION MEASURE (4.4.4)	X	X	X	X															
WEIGHT MEASURE (4.4.5)	X	X	X	X															
STOWAGE TAKEUP/FORCE DEMO (4.5.3)	X	X	X	X	X	X													
MANUAL CONTROL DEMO (4.4.3.3)	X	X	X	X	X	X													
AUTOMATIC OPERATION (4.5.1)	X	X	X	X	X	X													
HIGH TEMP (4.5.5.1)	X	X	X	X										X	X				
LOW TEMP (4.5.5.2)	X	X	X	X										X	X				
HUMIDITY (4.5.5.3)	X	X	X	X										X	X				
SALT FOG (4.5.5.5)	X	X	X	X										X	X				
SAND AND DUST (4.5.5.6)	X	X	X	X										X	X				
VIBRATION (4.5.5.7)	X	X	X	X										X	X				
LIFE CYCLE (4.5.6)	X		X		X	X													
FLIGHT SUMULATION (4.5.2)	X						X												
DYNAMIC CRASH TESTS (4.5.8)	X	X	X	X	X	X	X	X	X	X	X								
STATIC STRENGTH (4.5.7)														X	X	X	X	X	X
FUNGUS (4.5.5.4)												X	X						
SERVICE (5 MINIMUM) (4.2.2)																			

Downloaded from http://www.everyspec.com

Downloaded from http://www.everyspec.com

TABLE IB. MA-14 and MA-16 type inertia reel qualification test matrix

	1	2	3	4	5	6	7	8	9	10	11	12	13	14	15	16	17	18	19	20	21	22	23	24	25	26	27	28	29	30
REVIEW DRAWING/MATERIALS/PROCESSES (4.3, 4.4.1)	X	X	X	X	X	X	X	X	X	X	X	X	X	X	X	X	X	X	X	X	X	X	X	X	X	X	X	X	X	X
DESIGN VERIFICATION (4.4)	X	X	X	X	X	X	X	X	X	X	X	X	X	X	X	X	X	X	X	X	X	X	X	X	X	X	X	X	X	X
PARTS INTERCHANGE DEMONSTRATION (4.4.2)																										X	X	X		
SUBASSEMBLY INTERCHANGE AS REQUIRED (4.4.3 SUBS)	X	X	X																											
PROOF LOAD AND RECALIBRATE (4.5.4)	X	X	X	X	X	X	X	X	X	X	X	X	X	X	X	X	X	X	X	X	X	X	X	X	X	X	X	X	X	X
CATEGORY I VIBRATION (4.5.5.7)	X	X	X	X	X	X	X	X																	X	X				
VISUAL EXAM (4.2.3.1, 4.2.3.2)	X	X	X	X	X	X	X	X	X	X	X	X	X	X	X	X	X	X	X	X	X	X	X	X	X	X	X	X	X	X
DIMENSION MEASURE (4.4.4)	X		X		X		X																							
WEIGHT MEASURE (4.4.5)	X		X		X		X																							
STOWAGE TAKEUP/FORCE DEMO (4.5.3)	X		X		X		X		X		X																			
MANUAL CONTROL DEMO (4.4.3.3)	X		X		X		X		X		X																			
AUTOMATIC OPERATION (4.5.1)	X		X		X		X		X		X																			
HIGH TEMP (4.5.5.1)	X	X	X	X	X	X	X	X																	X	X				
LOW TEMP (4.5.5.2)	X	X	X	X	X	X	X	X																	X	X				
HUMIDITY (4.5.5.3)	X	X	X	X	X	X	X	X																	X	X				
SALT FOG (4.5.5.5)	X	X	X	X	X	X	X	X																	X	X				
SAND AND DUST (4.5.5.6)	X	X	X	X	X	X	X	X																	X	X				
VIBRATION (4.5.5.7)	X	X	X	X	X	X	X	X																	X	X				
LIFE CYCLE (4.5.6)	X				X				X		X																			
FLIGHT SUMULATION (4.5.2)	X									X																				
DYNAMIC CRASH TESTS (4.5.8)	X	X	X	X	X	X	X	X	X	X	X	X	X	X	X	X	X	X	X	X	X	X								
STATIC STRENGTH (4.5.7)																									X	X	X	X	X	X
FUNGUS (4.5.5.4)																							X	X						
SERVICE (5 MINIMUM) (4.2.2)																														

Downloaded from http://www.everyspec.com

TABLE II. Production acceptance test sample size

SIZE OF PRODUCTION LOT	QUANTITY OF SAMPLES TO BE TESTED
1 - 100	5
101 - 500	10
501 - 1,000	15
1000+	20

Downloaded from http://www.everyspec.com

TABLE III. Subassembly test/inspection requirements

REQUIREMENT	SUBASSEMBLY				
	INERTIA REEL HOUSING		WEBBING LEAD-IN CABLE	MANUAL CONTROL CABLE	MANUAL CONTROL HANDLE
	W/O CABLE	W/CABLE			
VISUAL	4.2.3.1	4.2.3.1	4.2.3.1	4.2.3.1	4.2.3.1
DESIGN/CONSTRUCTION	4.4 4.4.3.1.4	4.4 4.4.3.1.3	4.4 4.4.3.2.1	4.4 4.4.3.4	4.4
DIMENSIONS	4.4.4	4.4.4 4.4.3.1.3	4.4.4 4.4.3.2	4.4.4	4.4.4
FLIGHT SIMULATION	4.5.2	4.5.2	N/A	N/A	N/A
OPERATION	4.4.3.1 4.5.1 4.5.2 4.5.3	4.4.3.1 4.4.3.1.3 4.4.3.1.4 4.5.2 4.5.1 4.5.3	4.4.3.1.4 4.4.3.2.1 4.4.3.2.1.3	4.4.3.4 4.4.3.4.6	4.4.3.3 4.4.3.3.3
ADJUSTABILITY	4.4.3.1.5	N/A	N/A	4.4.3.4.2	N/A
INTERCHANGEABILITY	4.4.2 4.4.3.1.2 4.4.3.2.1.2	N/A	4.4.2 4.4.3.1.2 4.4.3.2.1.2 4.4.3.2.1.4	4.4.2 4.4.3.4.3 4.4.3.1.2	4.4.2 4.4.3.3.1 4.4.3.1.2
THROW (STROKE)	N/A	N/A	N/A	4.4.3.4.1 4.4.3.4.5	4.4.3.3.2
ENVIRONMENTAL	4.5.5	4.5.5	4.5.5	4.5.5	4.5.5
WEIGHT	4.4.5	4.4.5	4.4.5	N/A	4.4.5
LIFE CYCLE	4.5.6	4.5.6 4.5.6.2	4.5.6	4.5.6 4.5.6.3	4.5.6 4.5.6.3
DYNAMIC CRASH	4.5.8	4.5.8	N/A	N/A	N/A
SERVICE LIFE	4.10	4.10	4.10	4.10	4.10
PROOF STRENGTH	4.5.4	4.5.4	4.5.4	N/A	N/A
DESIGN STRENGTH	4.5.7	4.5.7	4.5.7 4.5.7.2	N/A	N/A
LOAD TRANSMISSION	N/A	N/A	N/A	4.4.3.4.4	4.4.3.4.4

Downloaded from http://www.everyspec.com

TABLE IV. Impact conditions for dynamic tests

IMPACT CONDITION		PARAMETER	ROTARY WING AND VTOL AIRCRAFT	FIXED WING AIRCRAFT TRANSPORT CATAGORY (1)	FIXED WING AIRCRAFT LIGHT WEIGHT (2)
A	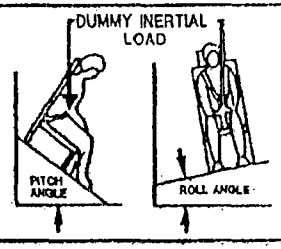	PITCH ANGLE (DEG) ROLL ANGLE (DEG) t1 SEC t2 SEC G MIN G MAX ΔV MIN, FT/SEC (M/SEC)	30 10 0.024 0.031 23 28 50 (15.2)	30 0 0.070 0.080 14 16 35	30 0 0.040 0.050 19 21 31
B	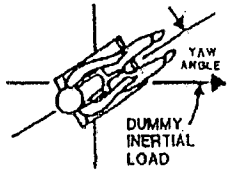	YAW ANGLE (DEG) t1 SEC t2 SEC G MIN G MAX ΔV MIN, FT/SEC (M/SEC)	30 0.068 0.100 28 33 50 (15.2)	10 0.080 0.090 16 18 44	10 0.040 0.050 28 30 42
C	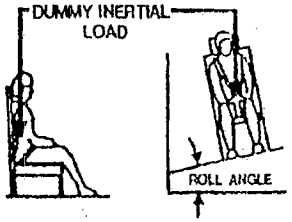	ROLL ANGLE (DEG) t1 SEC t2 SEC G MIN G MAX ΔV MIN, FT/SEC (M/SEC)	30 0.014 0.020 15 20 42 (12.8)	N/A	N/A
D	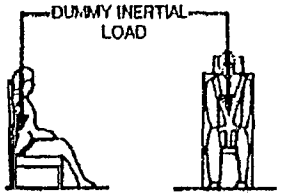	t1 SEC t2 SEC G MIN G MAX ΔV MIN, FT/SEC (M/SEC)	0.020 0.030 6 9 24	N/A	N/A

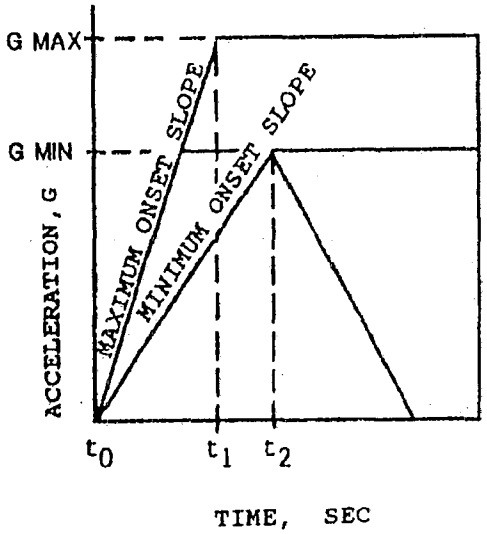

NOTES:

(1) Transport category aircraft as defined in the Code of Federal Regulations, Title 14, Part 24.

(2) Normal, utility, acrobatic, and commuter category aircraft as defined in the Code of Federal Regulations, Title 14, Part 23.

Downloaded from http://www.everyspec.com

TABLE V. Schedule of dynamic testing

TEST ITEM	(1) IMPACT CONDITION	(2) REEL ORIENTATION	(3) WEBBING ON SPOOL		(4) ALLOWABLE STRAP DISPLACEMENT	
			MA-2 MA-6 MA-8	MA-14 MA-16	MA-2 MA-6 MA-8	MA-14 MA-16
1	A	1	18	22	4.5	5.0
2	A	2	12	16	4.0	4.5
3	A	3	18	22	4.5	5.0
4	A	1	12	16	4.0	4.5
5	A	2	18	22	4.5	5.0
6	A	3	12	16	4.0	4.5
7	B	1	18	22	4.5	5.0
8	B	2	12	16	4.0	4.5
9	B	3	18	22	4.5	5.0
10	B	1	12	16	4.0	4.5
11	B	2	18	22	4.5	5.0
12	C	3		16		4.5
13	C	1		22		5.0
14	C	2		16		4.5
15	C	3		22		5.0
16	C	1		16		4.5
17	C	2		22		5.0
18	D	3		16		4.5
19	D	1		22		5.0
20	D	2		16		4.5
21	D	3		22		5.0
22	D	1		16		4.5

NOTES:

(1) Impact conditions are defined in Table IV.

(2) Orientations are defined in Figure 24.

(3) Tolerance for "Webbing on Spool" is +/– 1.0 inch.

(4) Total displacement includes allowance for webbing packing and elongation internal to the reel.

Downloaded from http://www.everyspec.com

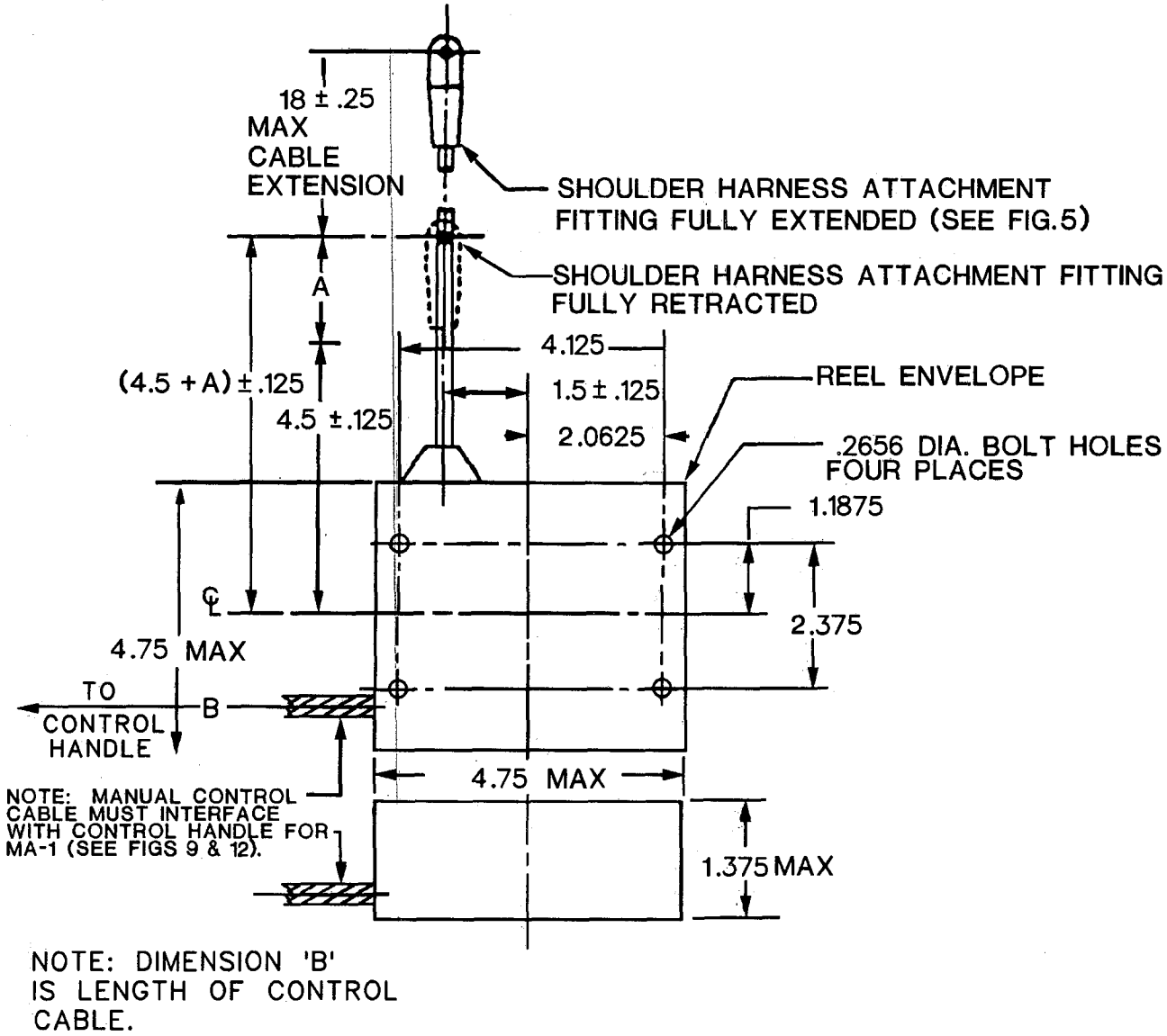

DIMENSIONS IN INCHES, UNLESS OTHERWISE SPECIFIED.
TOLERANCES: DECIMAL ± .010

FIGURE 1. Space provisions for MA-1 type inertia reel

Downloaded from http://www.everyspec.com

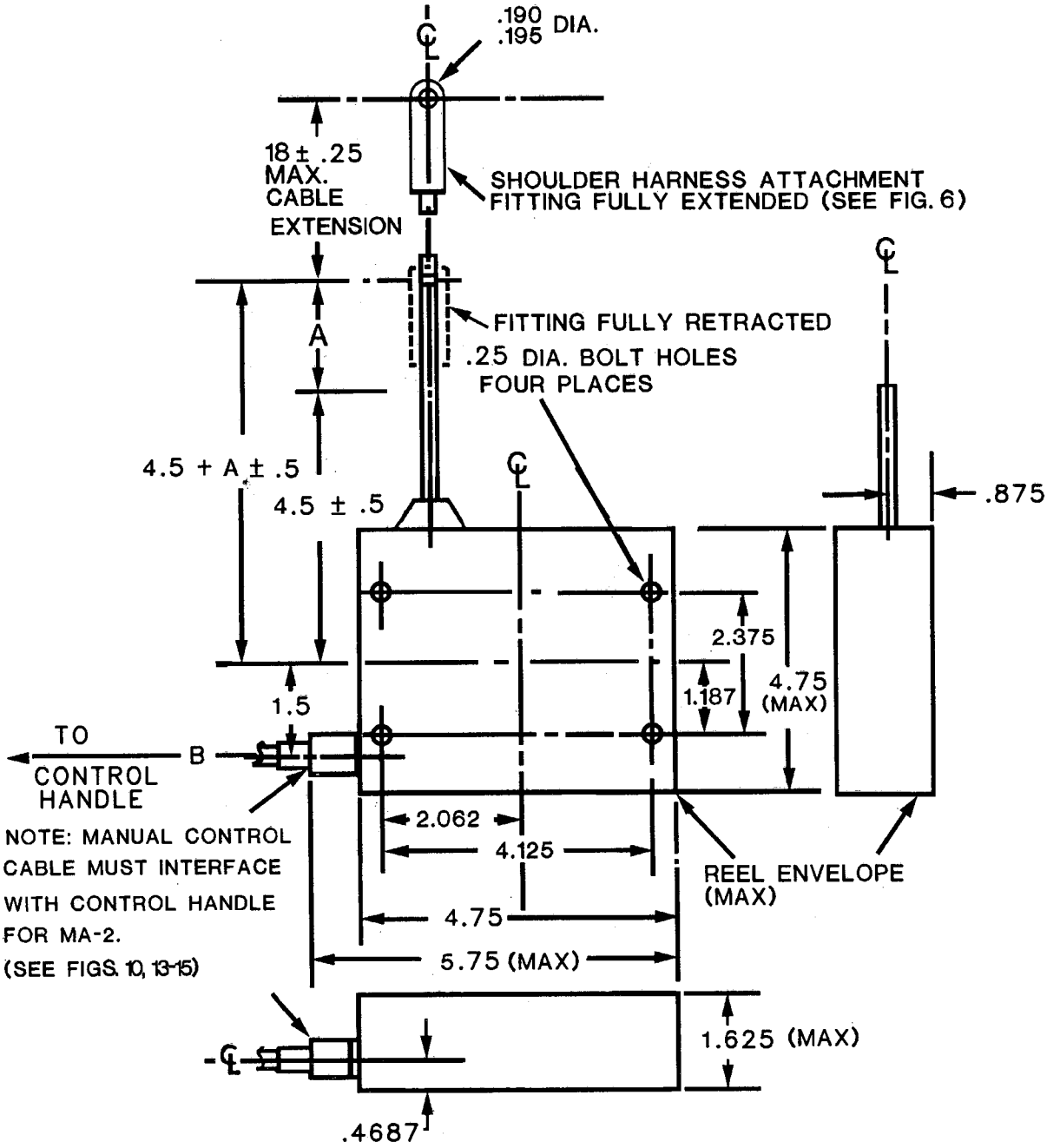

NOTE: DIMENSION 'B' IS LENGTH OF CONTROL CABLE

DIMENSIONS IN INCHES, UNLESS OTHERWISE SPECIFIED.

TOLERANCES: ±.010 (DECIMAL)

FIGURE 2. Space provisions for MA-2 type inertia reel

Downloaded from http://www.everyspec.com

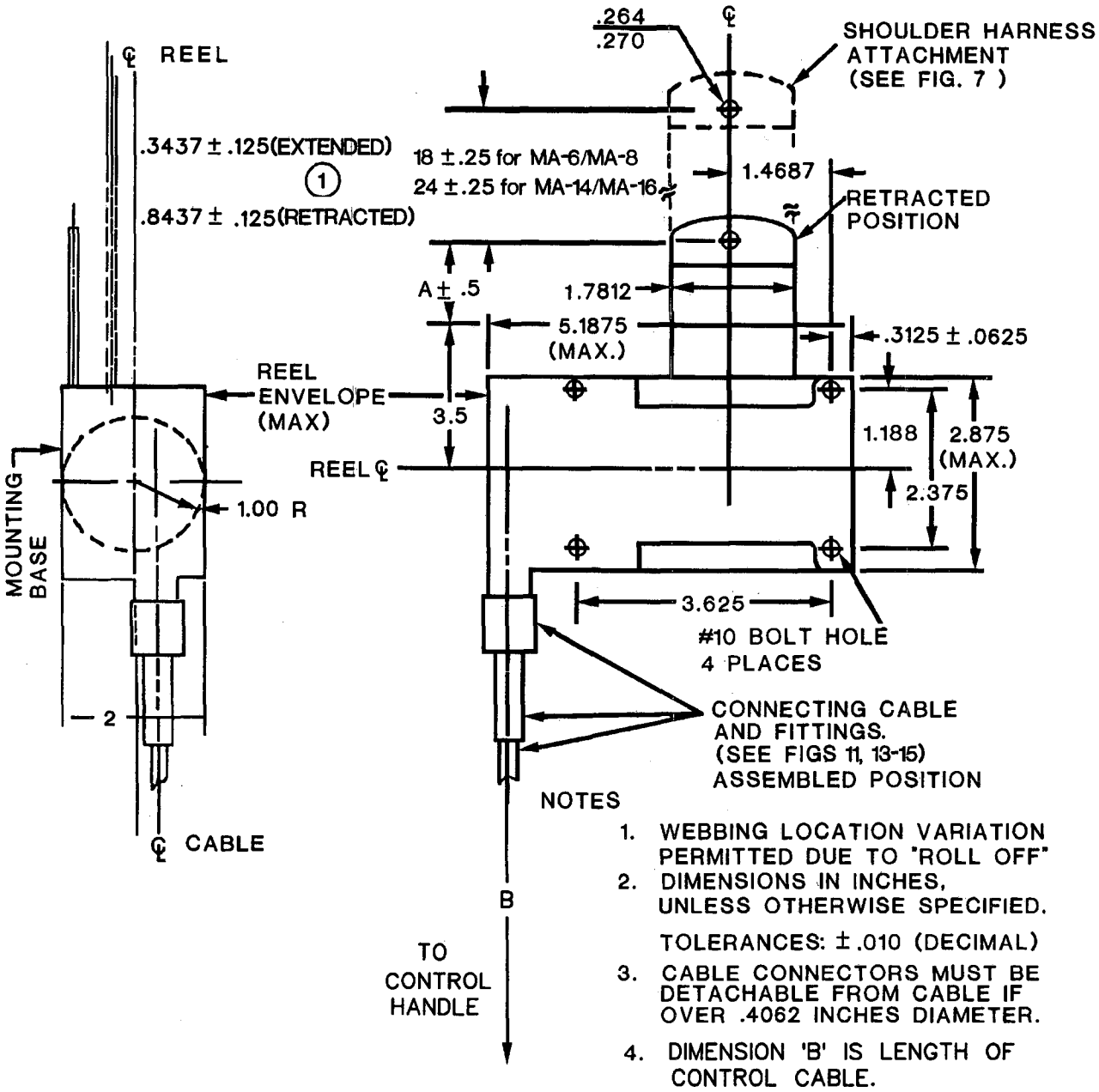

NOTES

1. WEBBING LOCATION VARIATION PERMITTED DUE TO "ROLL OFF"
2. DIMENSIONS IN INCHES, UNLESS OTHERWISE SPECIFIED.

   TOLERANCES: ±.010 (DECIMAL)
3. CABLE CONNECTORS MUST BE DETACHABLE FROM CABLE IF OVER .4062 INCHES DIAMETER.
4. DIMENSION 'B' IS LENGTH OF CONTROL CABLE.

FIGURE 3. Space provisions for MA-6, MA-8, MA-14 and MA-16 type inertia reels

Downloaded from http://www.everyspec.com

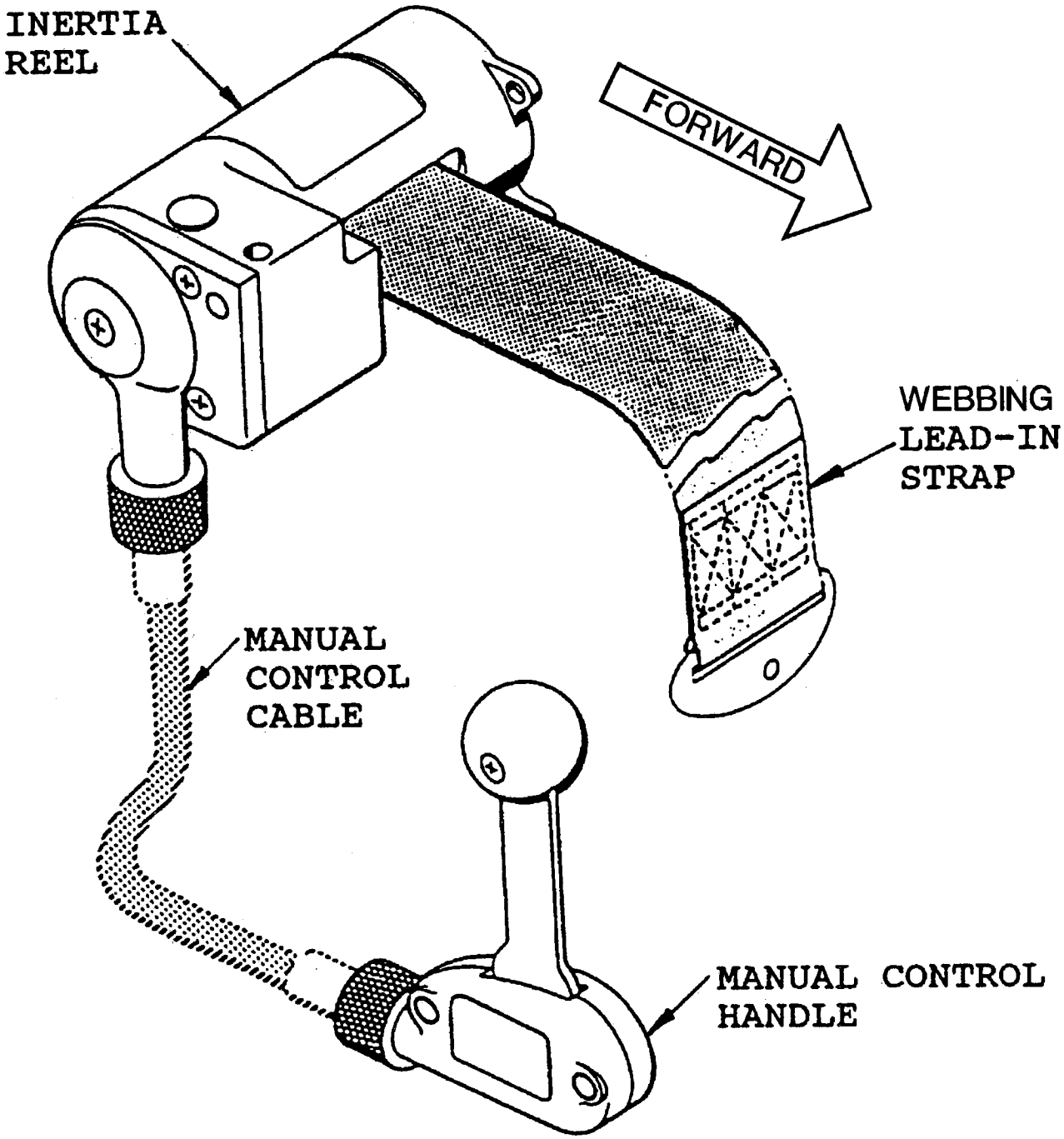

FIGURE 4. Inertia reel subassemblies, MA-6, MA-8, MA-14 and MA-16 type inertia reels

Downloaded from http://www.everyspec.com

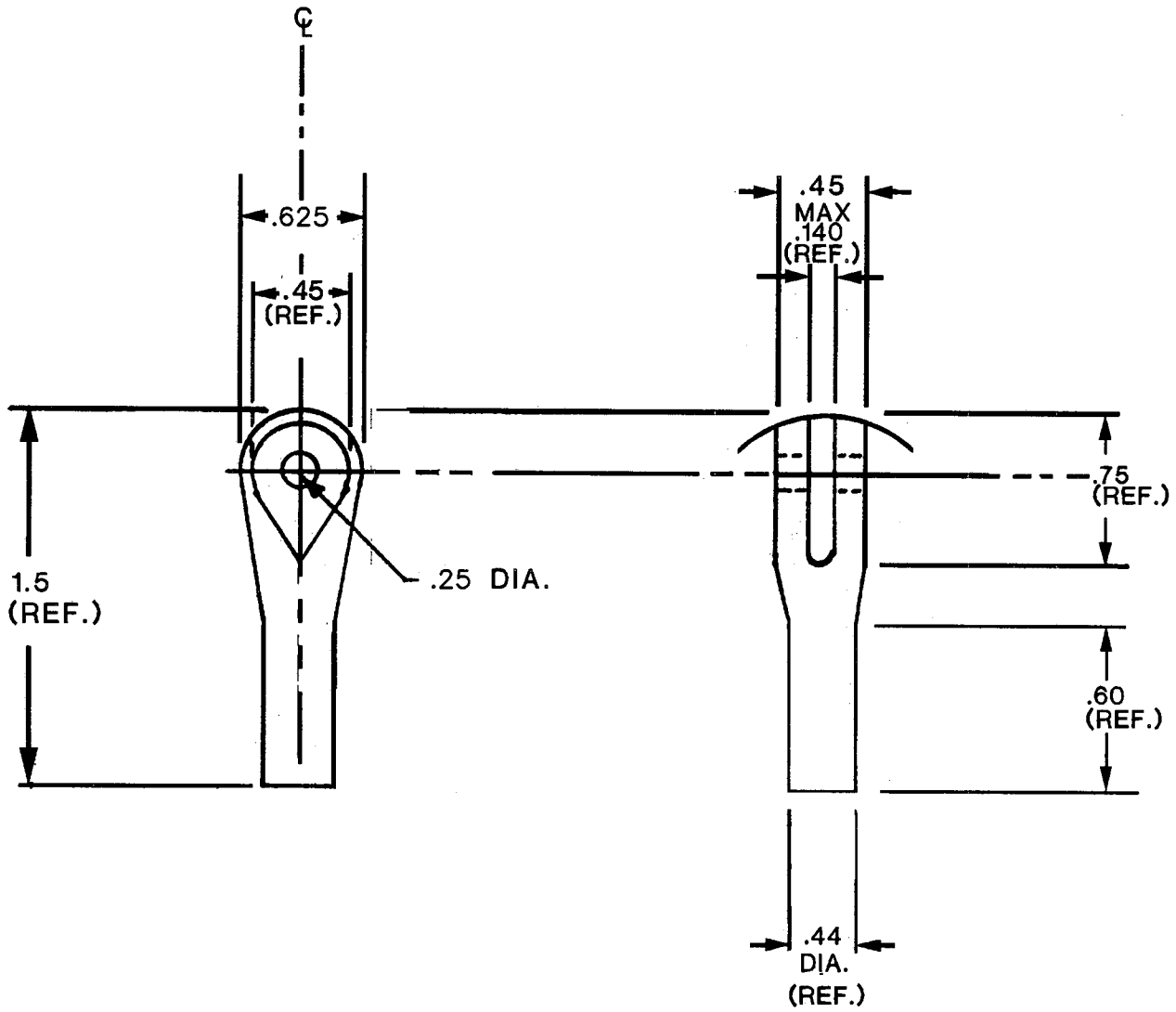

NOTE: DIMENSIONS IN INCHES, UNLESS OTHERWISE SPECIFIED.

TOLERANCES: ±.010 (DECIMAL)

FIGURE 5. Shoulder harness attachment fitting dimensions, MA-1 type inertia reel

Downloaded from http://www.everyspec.com

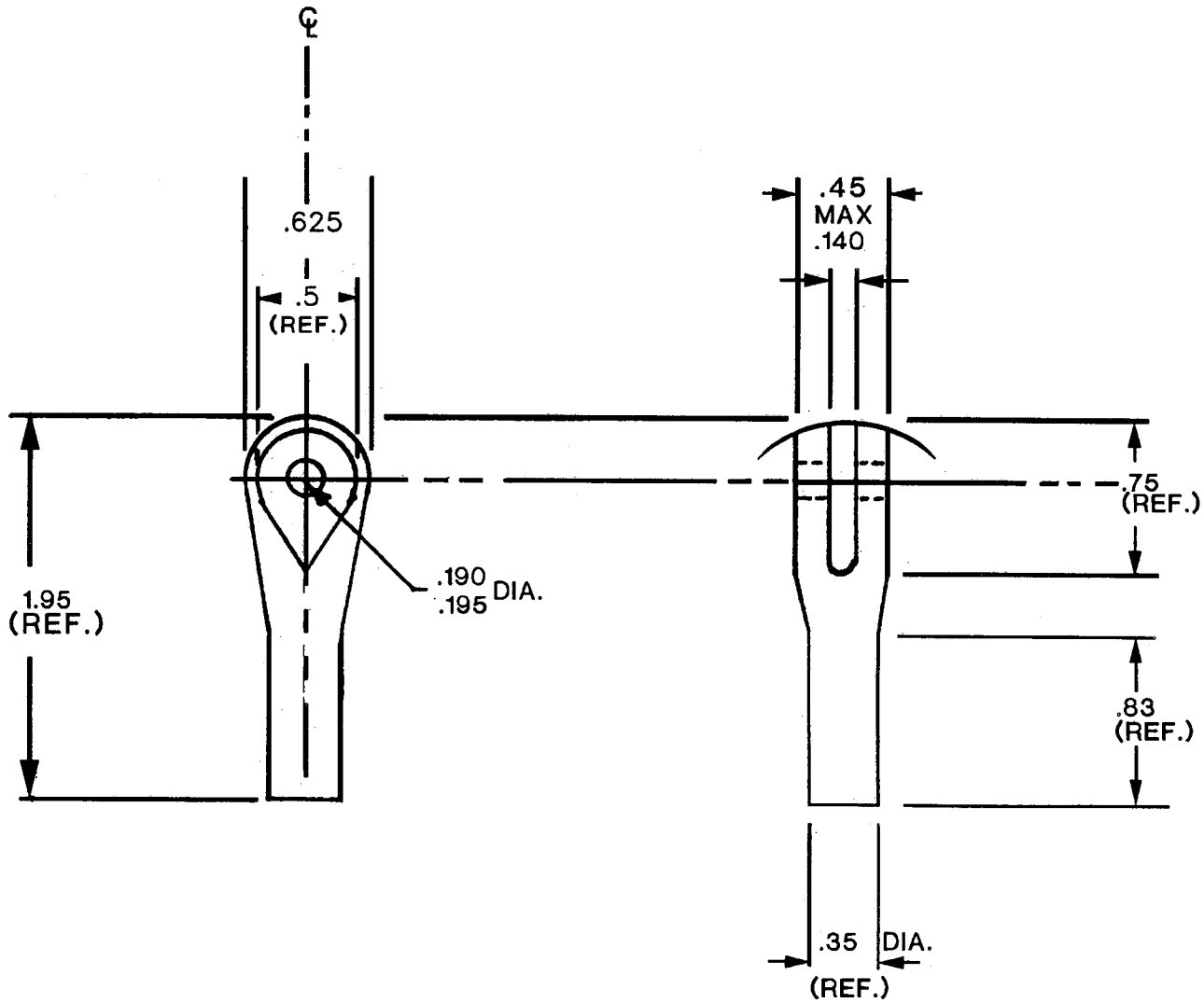

NOTE: DIMENSIONS IN INCHES, UNLESS OTHERWISE SPECIFIED.

TOLERANCES: ±.010 (DECIMAL)

FIGURE 6. Shoulder harness attachment fitting dimensions, MA-2 type inertia reel

Downloaded from http://www.everyspec.com

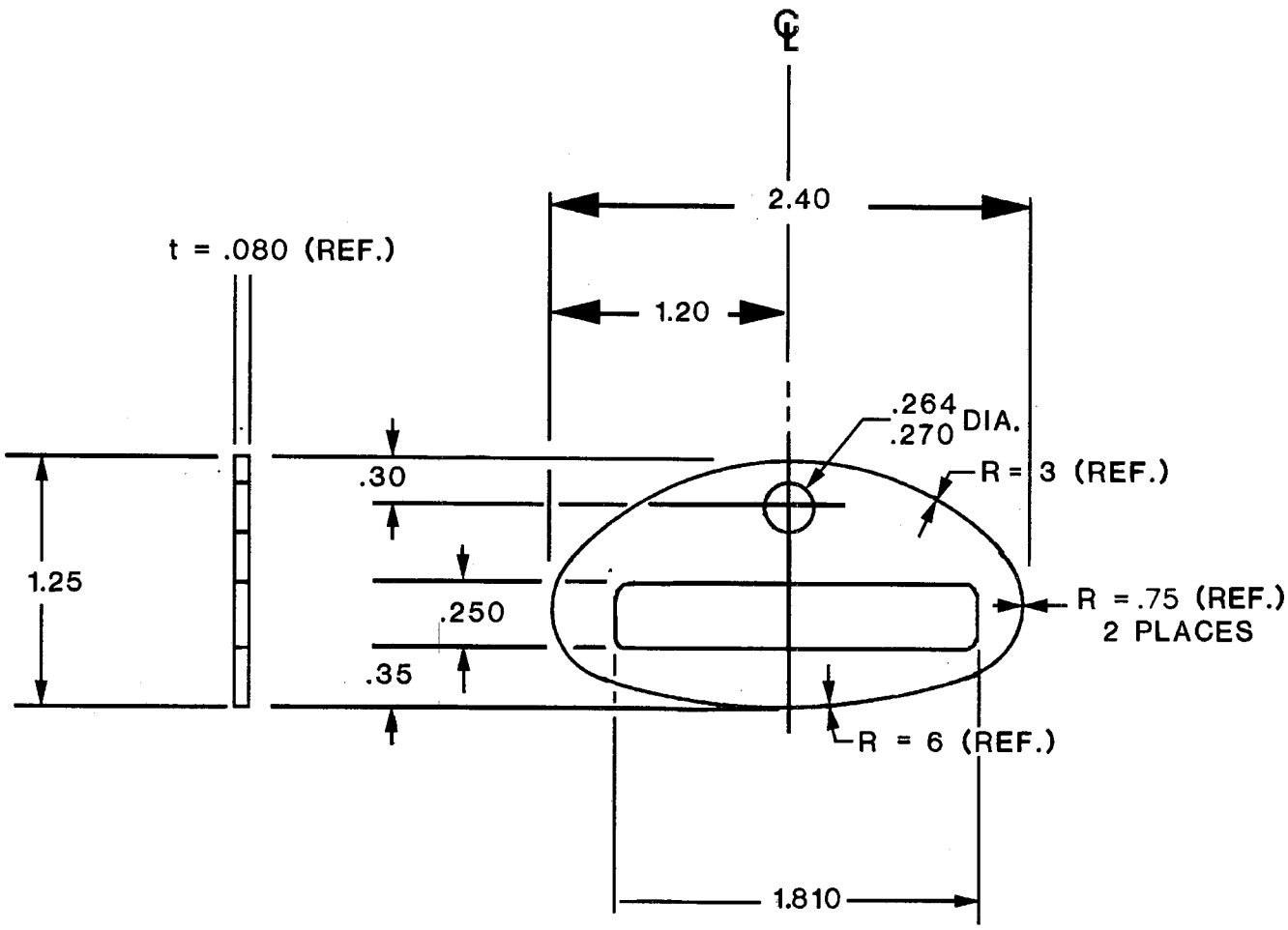

NOTE: DIMENSIONS IN INCHES, UNLESS OTHERWISE SPECIFIED.

TOLERANCES: ±.010 (DECIMAL)

FIGURE 7. Shoulder harness attachment fitting dimensions, MA-6, MA-8, MA-14 and MA-16 type inertia reels

Downloaded from http://www.everyspec.com

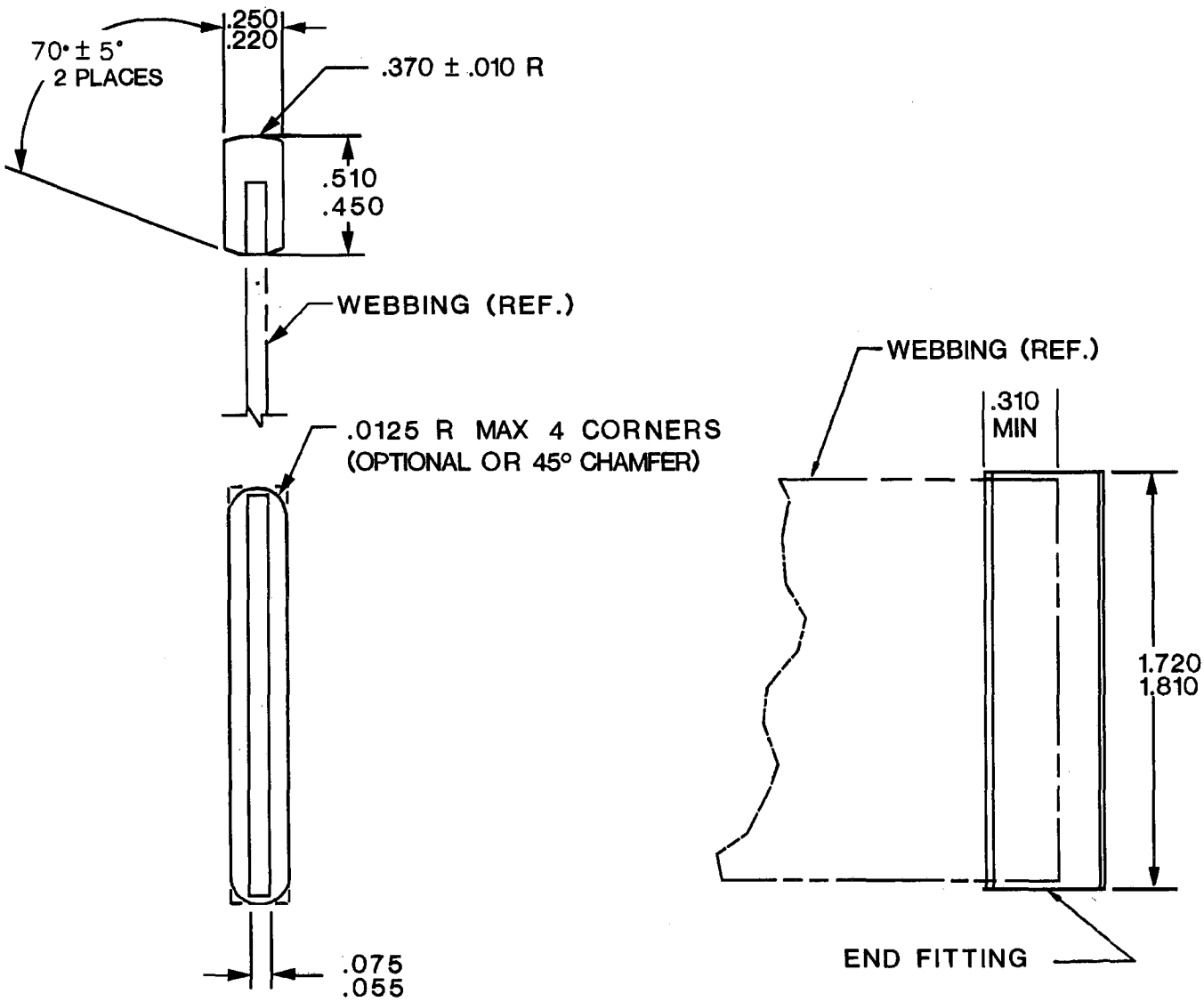

NOTE: DIMENSIONS IN INCHES, UNLESS OTHERWISE SPECIFIED.

TOLERANCES: ±.010 (DECIMAL)

FIGURE 8. Interface control dimensions, webbing lead-in strap end fitting, MA-6, MA-8, MA-14 and MA-16 type inertia reels

Downloaded from http://www.everyspec.com

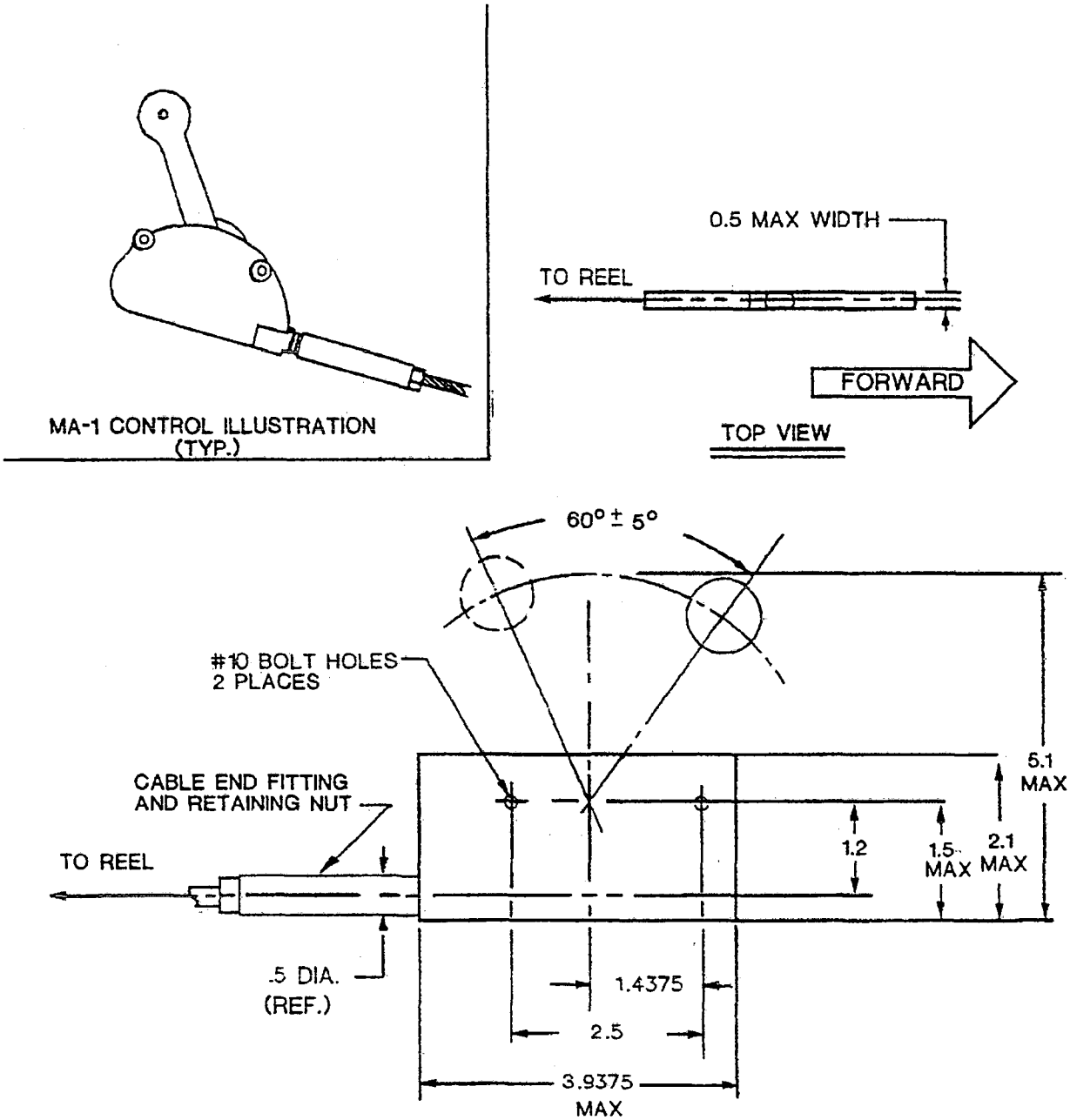

NOTE: MANUAL CONTROL MUST INTERFACE WITH CABLE END FITTINGS AND RETAINING NUT FOR MA-1 (SEE FIGS. 1 & 13).
CABLE STROKE - 1.21 ± 0.003

NOTE: DIMENSIONS IN INCHES, UNLESS OTHERWISE SPECIFIED.

TOLERANCES: ±.010 (DECIMAL)

FIGURE 9. Manual control handle dimensions, MA-1 type inertia reel

Downloaded from http://www.everyspec.com

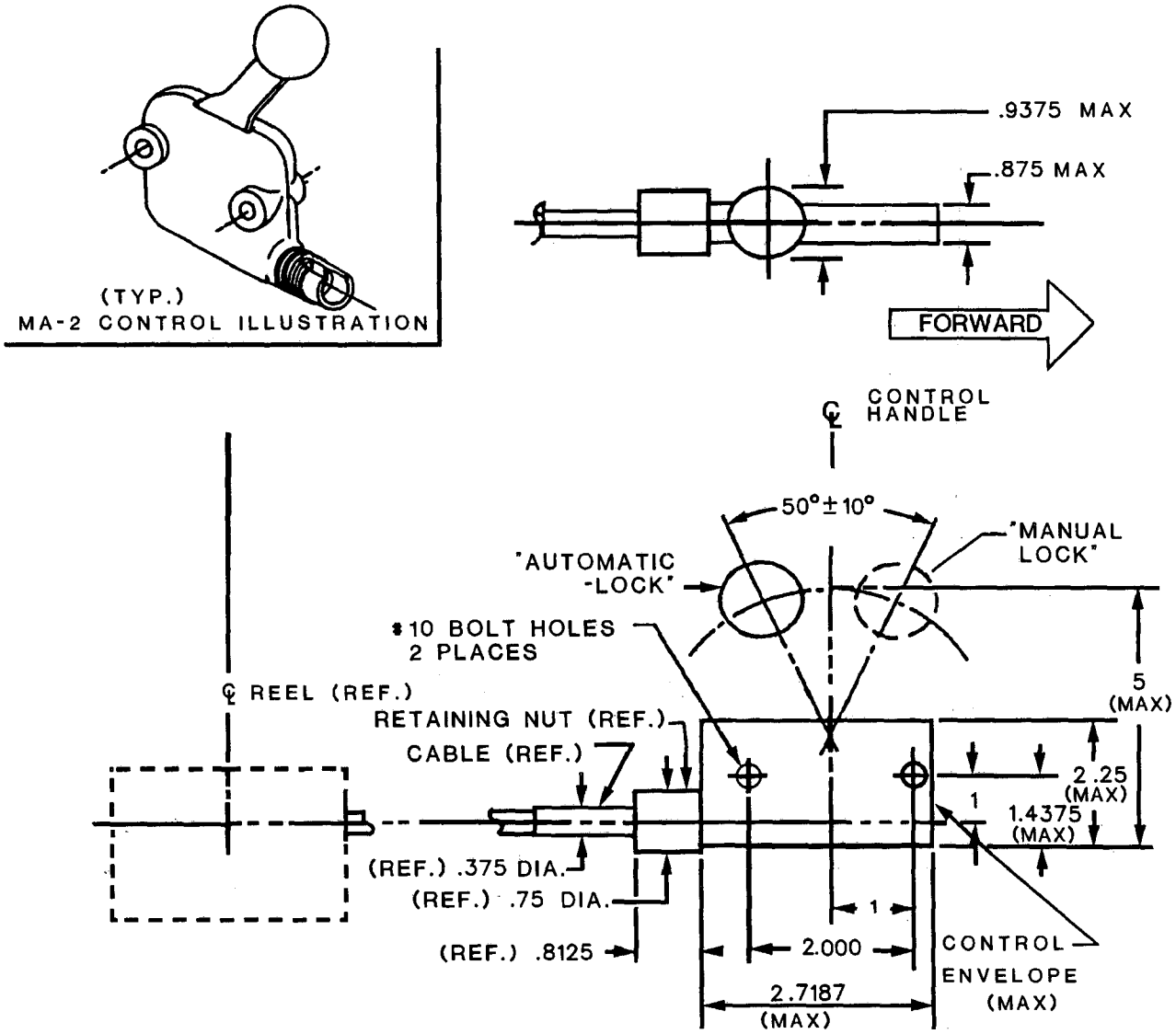

NOTE: MANUAL CONTROL MUST INTERFACE WITH CABLE END FITTINGS AND RETAINING NUT (SEE FIGS. 2, 13-15). MA-2 CABLE STROKE = 0.380 ± 0.03

NOTE: DIMENSIONS IN INCHES, UNLESS OTHERWISE SPECIFIED.

TOLERANCES: ±.010 (DECIMAL)

FIGURE 10. Manual control handle dimensions, MA-2 type inertia reel

Downloaded from http://www.everyspec.com

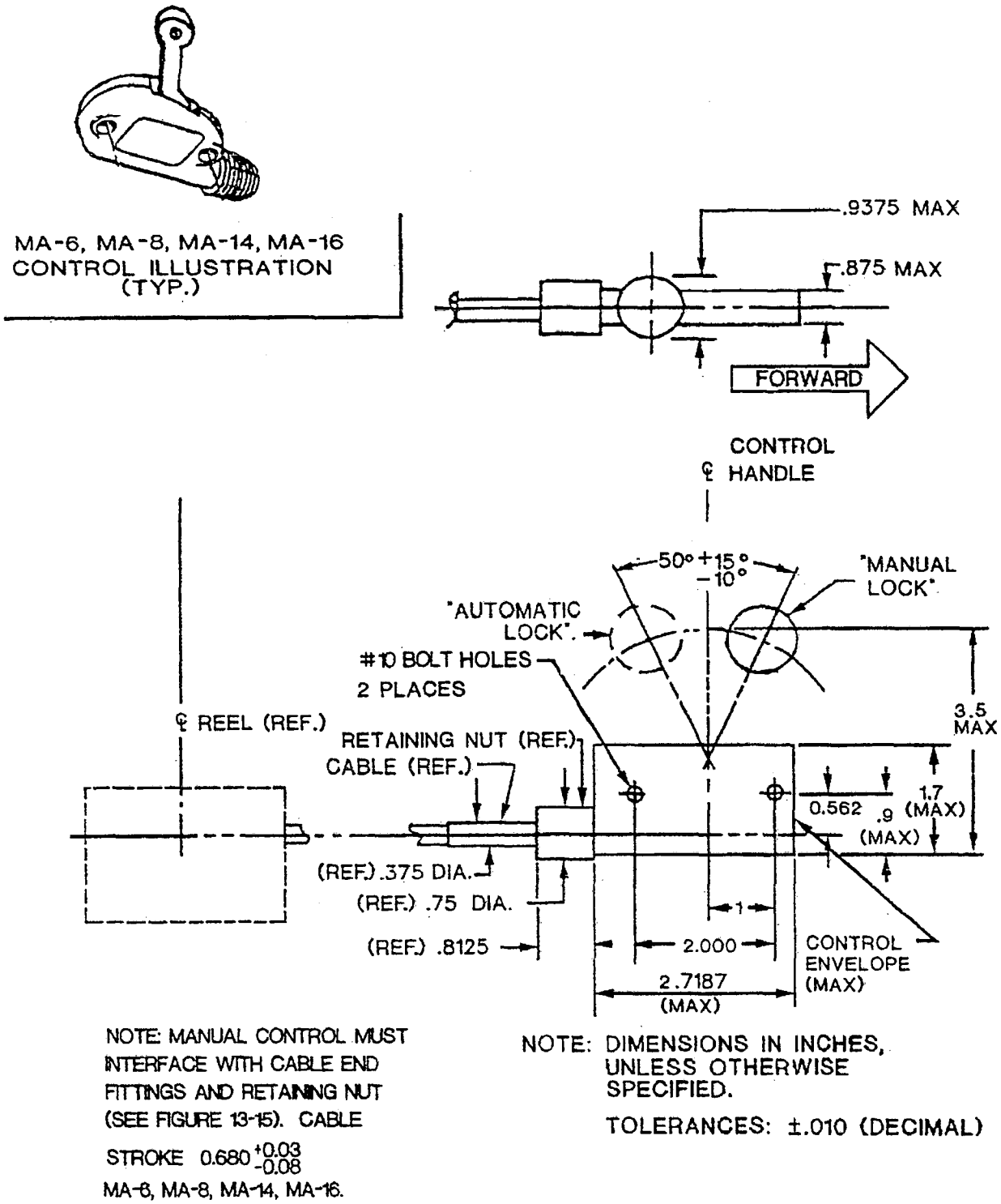

FIGURE 11. Manual control handle dimensions, MA-6, MA-8, MA-14 and MA-16 type inertia reels

Downloaded from http://www.everyspec.com

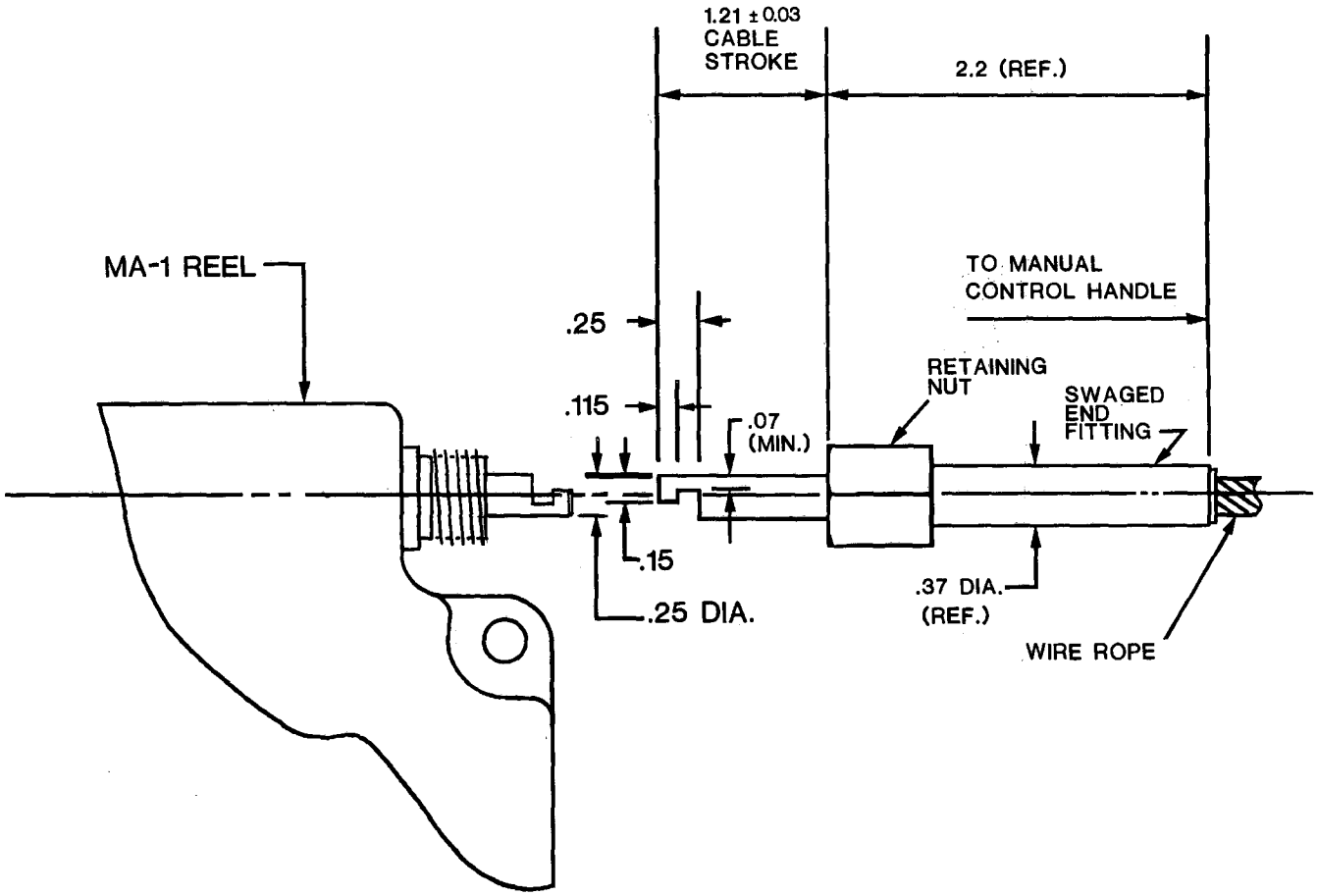

NOTE: DIMENSIONS IN INCHES, UNLESS OTHERWISE SPECIFIED.

TOLERANCES: ±.010 (DECIMAL)

FIGURE 12. Control cable end fitting assembly, MA-1 type inertia reel

Downloaded from http://www.everyspec.com

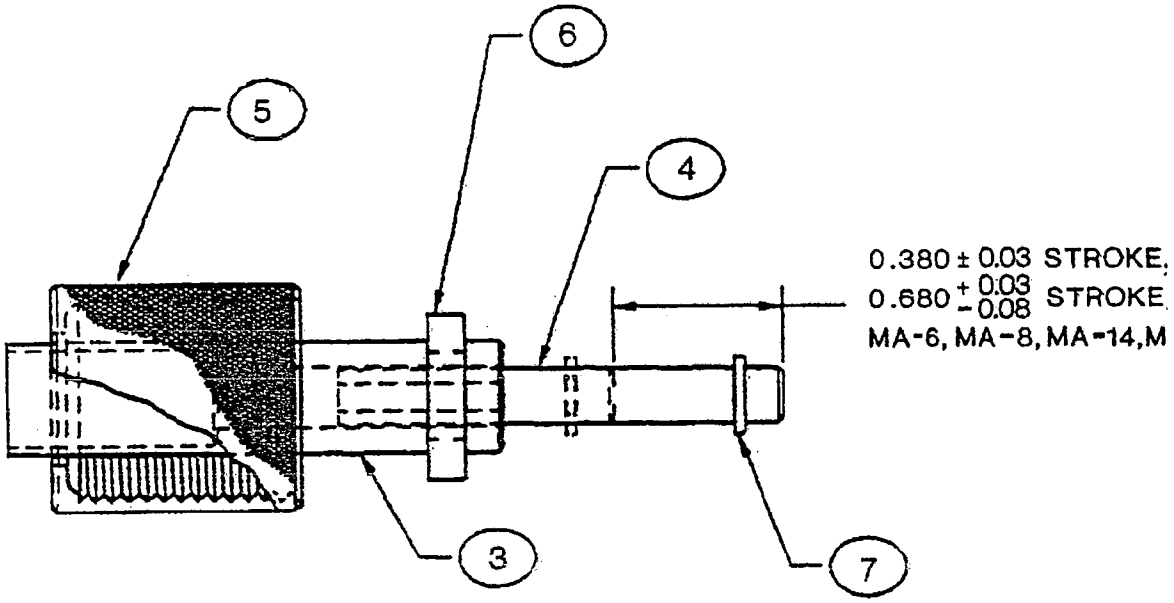

	RING, RETAINING	7	MS3211-1-SZ
	WASHER, HORSESHOE	6	FIG. 15
	NUT, RETAINING	5	FIG. 15
	FERRULE, SMALL	4	FIG. 14
	FERRULE, LARGE	3	FIG. 14

NOTE: DIMENSIONS IN INCHES.

FIGURE 13. Control cable end fitting assembly, MA-2, MA-6, MA-8, MA-14 and MA-16 type inertia reels

Downloaded from http://www.everyspec.com

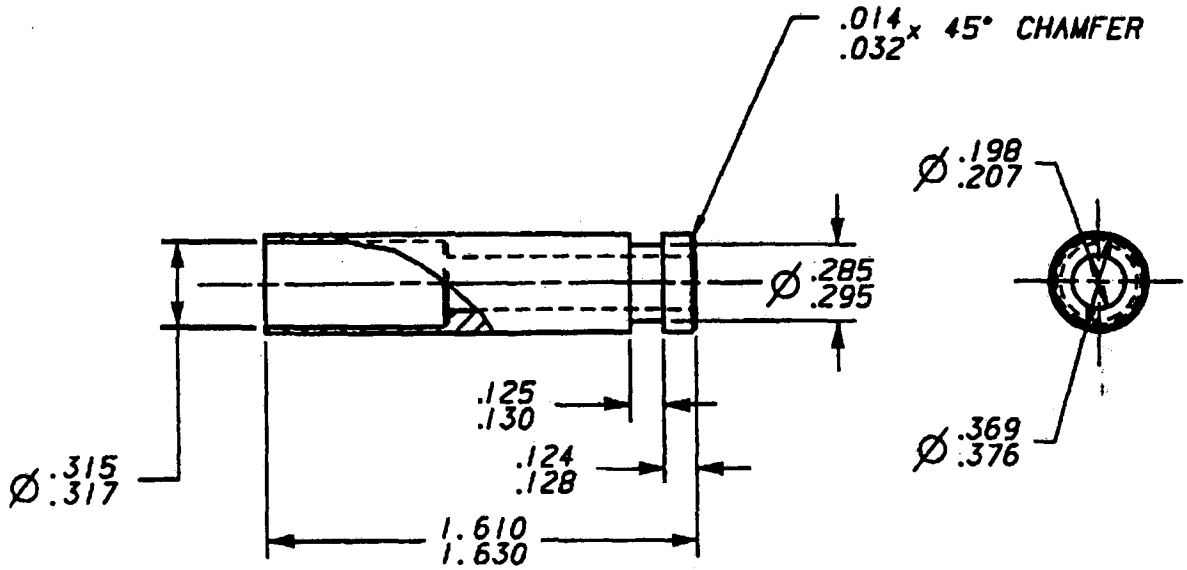

3 FERRULE, LARGE

NOTE:
DIMENSIONS IN INCHES.

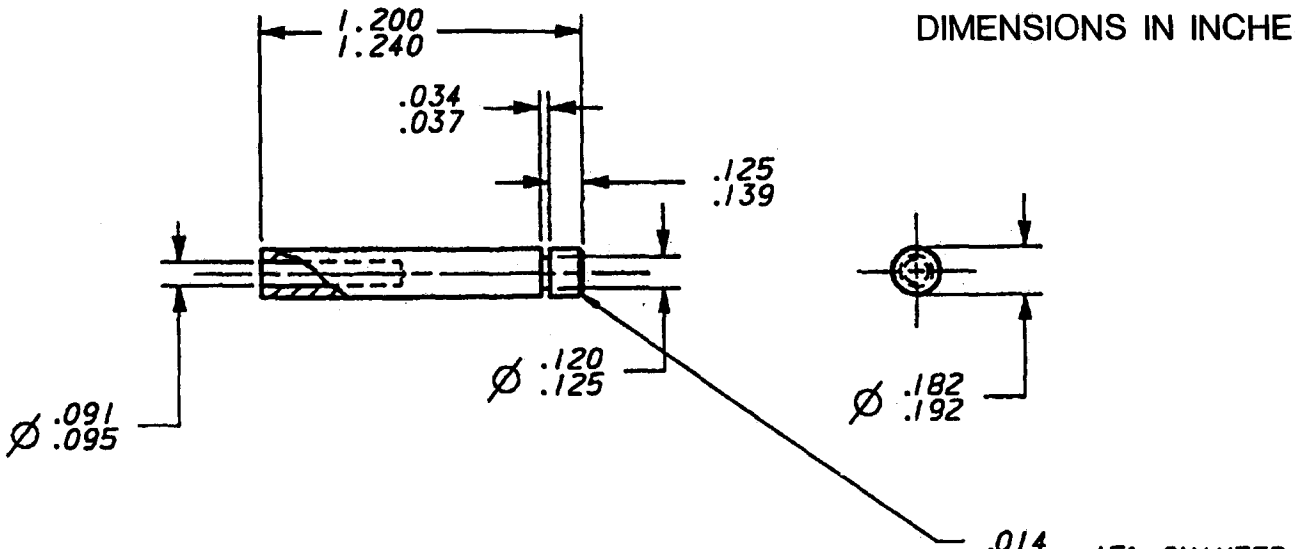

4 FERRULE, SMALL

FIGURE 14. Interface control dimensions control cable end fittings, MA-2, MA-6, MA-8, MA-14 and MA-16 type inertia reels

Downloaded from http://www.everyspec.com

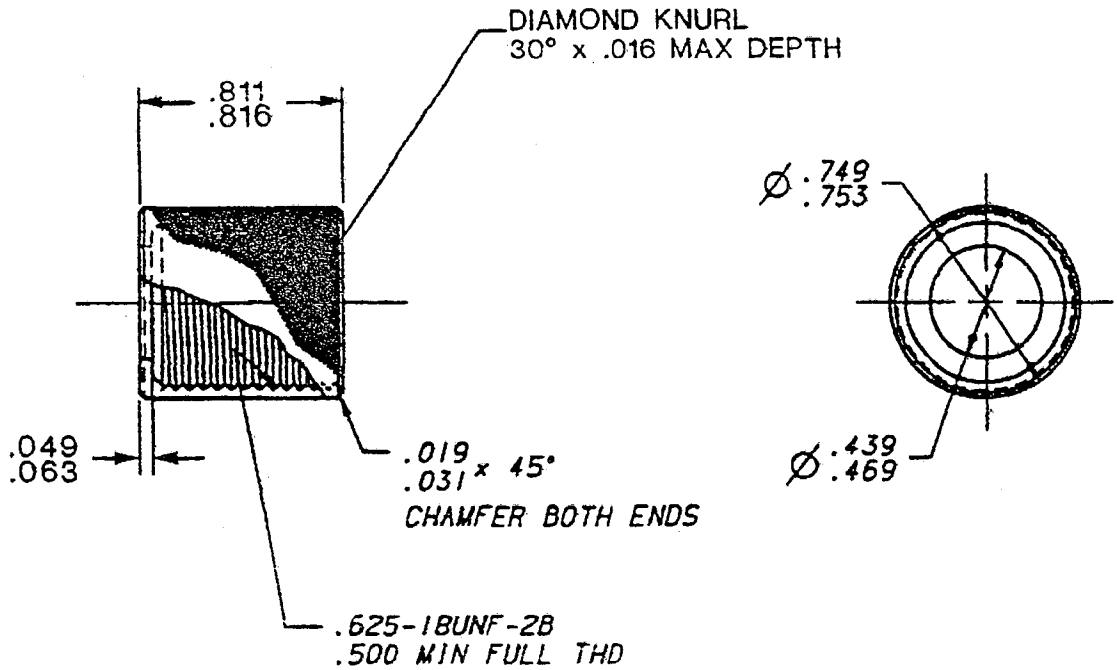

5 NUT, RETAINING

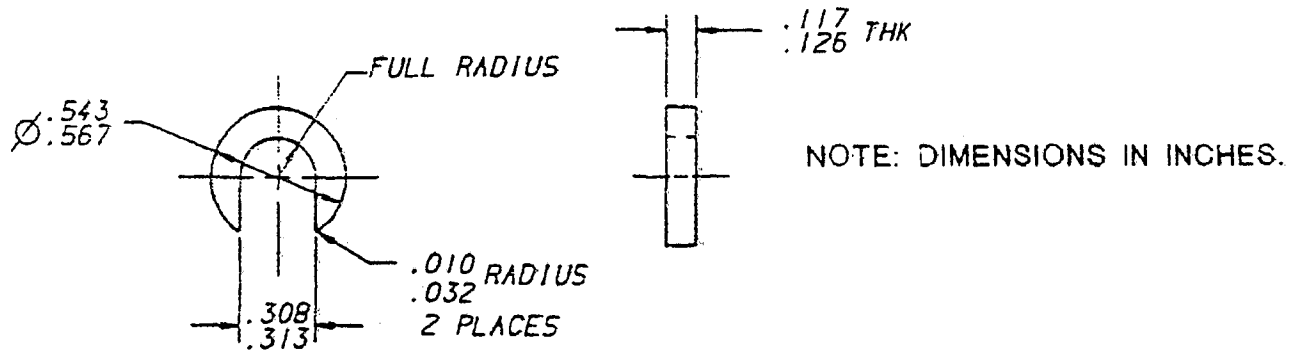

6 WASHER, HORSESHOE

FIGURE 15. Interface control dimensions control cable end fittings, MA-2, MA-6, MA-8, MA-14 and MA-16 type inertia reels

Downloaded from http://www.everyspec.com

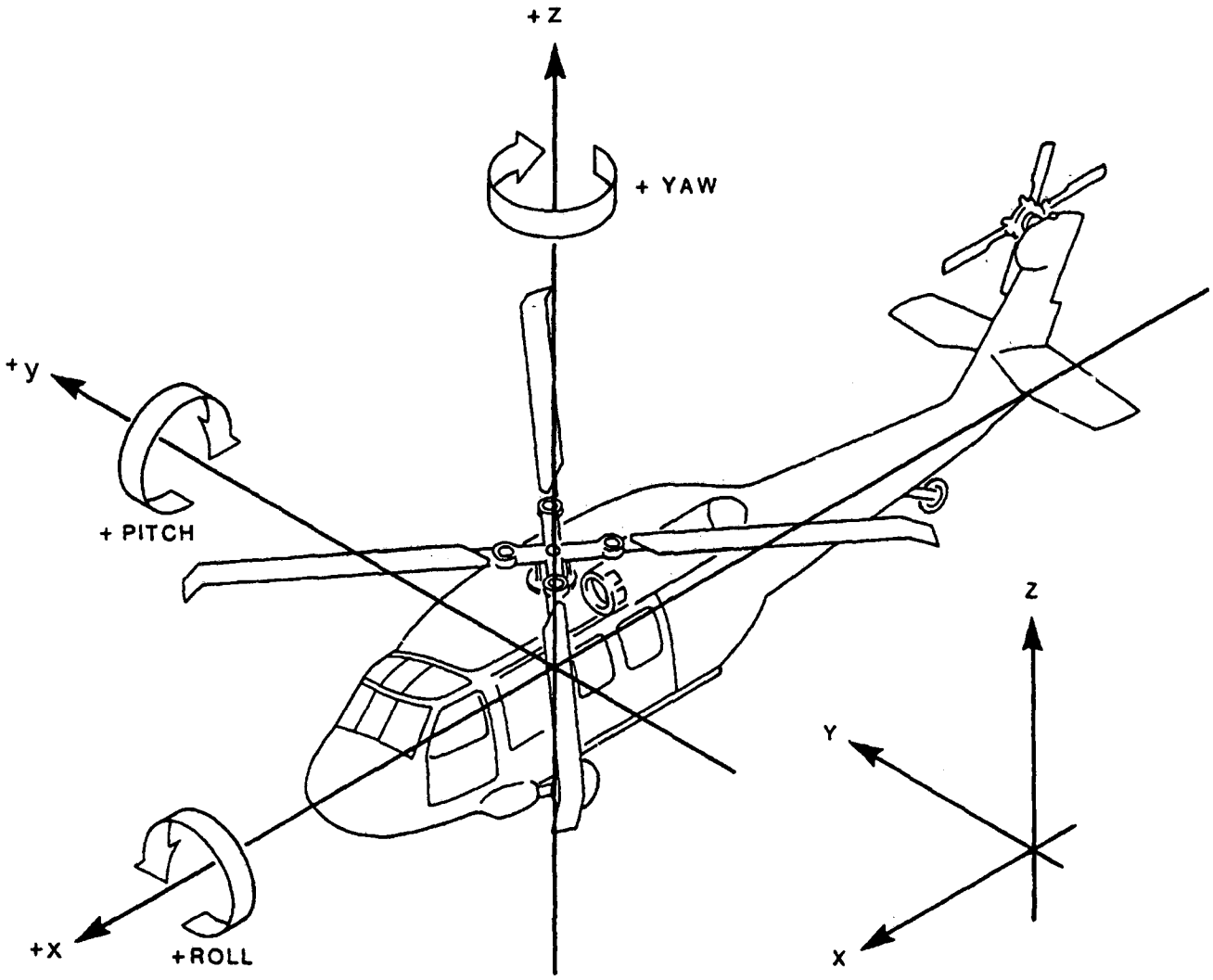

NOTE: RIGHT-HAND RULE DOES NOT APPLY.

FIGURE 16. Aircraft coordinate system for inertia reel automatic locking sensitivity

Downloaded from http://www.everyspec.com

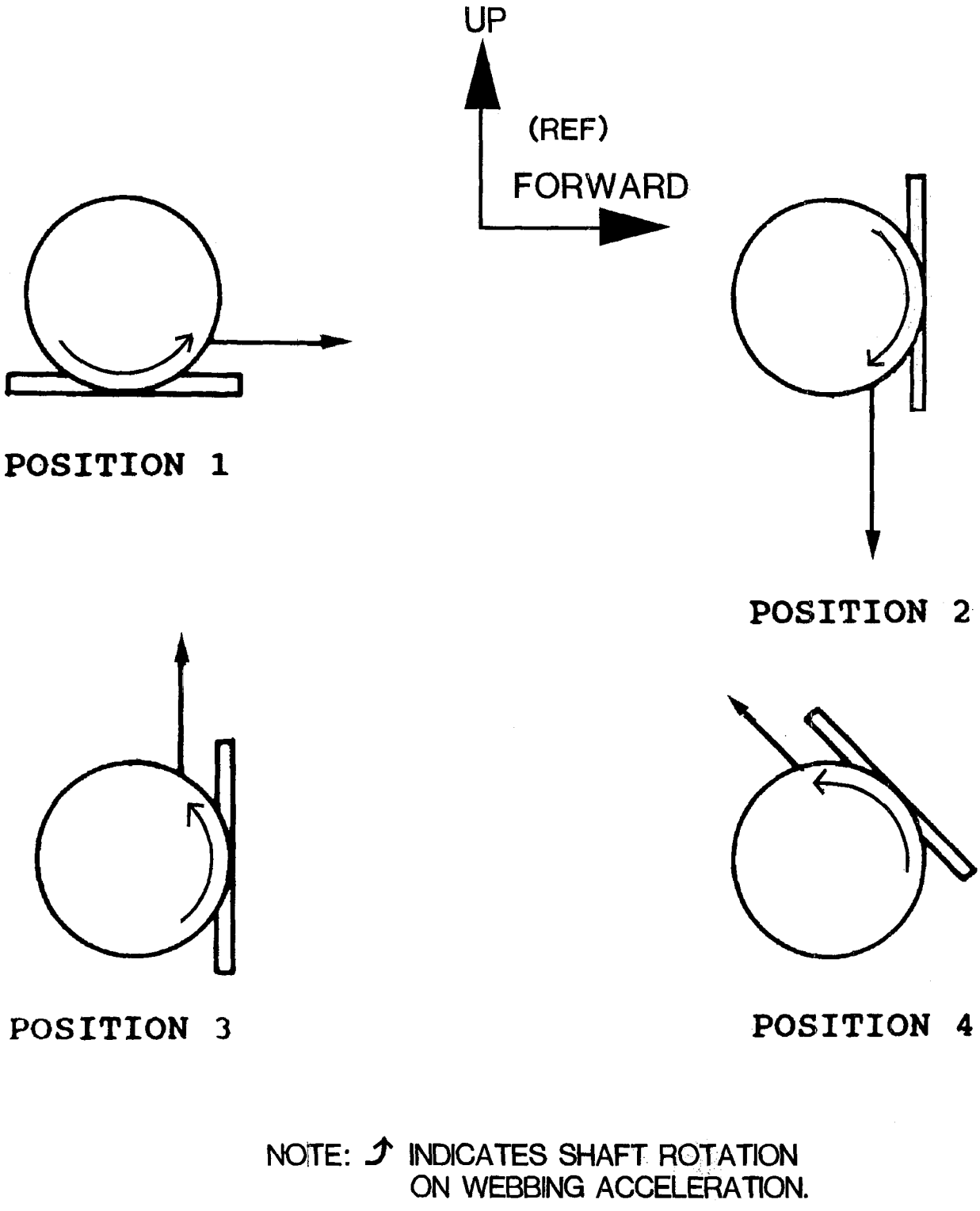

FIGURE 17. Inertia reel orientations for automatic operation

Downloaded from http://www.everyspec.com

Graphic approximation technique. Based upon acceleration time plots from measurements or computations; rise time, plateau duration, and G values may be obtained using the graphic approximation technique shown in Figure 19. The procedures for establishing the accelerations and times are:

a. Establish the calibration baseline.

b. Establish the maximum (peak) acceleration magnitude.

c. Construct a reference line parallel to the calibration baseline at a magnitude equal to 10 percent of the peak acceleration. The intersection of this line with the acceleration time plot defines points 1 and 2.

d. Construct a second reference line parallel to the calibration baseline at a magnitude equal to 90 percent of the peak acceleration. The intersection of this line with the acceleration time plot defines points 3 and 4.

e. Construct the onset line defined by the straight line through points 1 and 3.

f. Construct the offset line defined by the straight line through points 2 and 4.

g. Construct a line parallel to the calibration baseline, through the peak acceleration. The time interval defined by intersections of this line with the constructed onset and offset lines (points 5 and 6) is the plateau (t).

h. Locate the intersection of the constructed onset line with the calibration baseline (point 7). The time interval defined by points 7 and 5 is the rise time (t_r).

i. For a given plot of accelerations, the specific G values are graphically obtained from the constructed onset and offset lines for the specific time at which the acceleration is the greatest.

FIGURE 18. Graphic approximation technique

Downloaded from http://www.everyspec.com

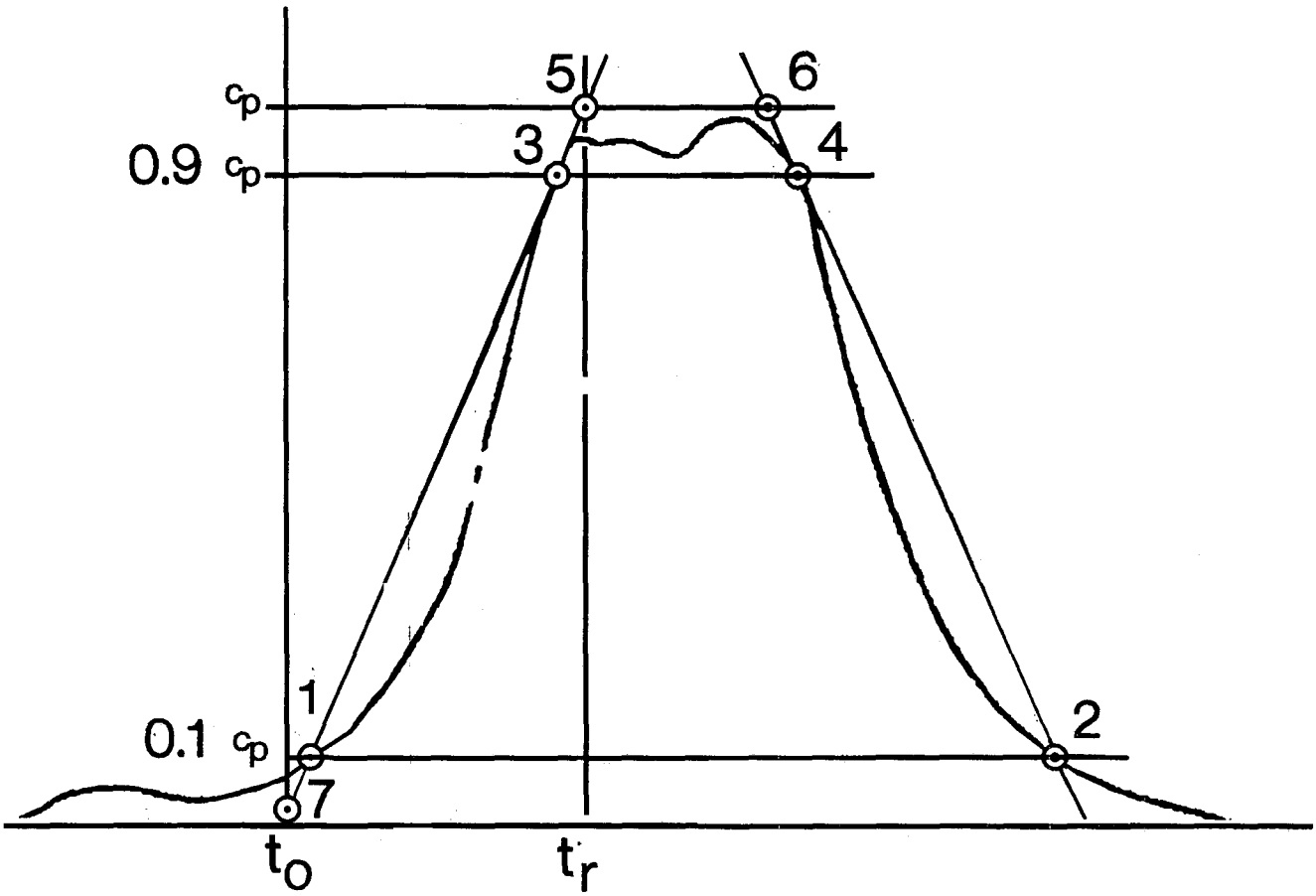

FIGURE 19. Graphic approximation example

Downloaded from http://www.everyspec.com

ORIENTATION NUMBER	INERTIA REEL MOUNTING ORIENTATION SCHEMATIC
1 (SEE NOTE 1)	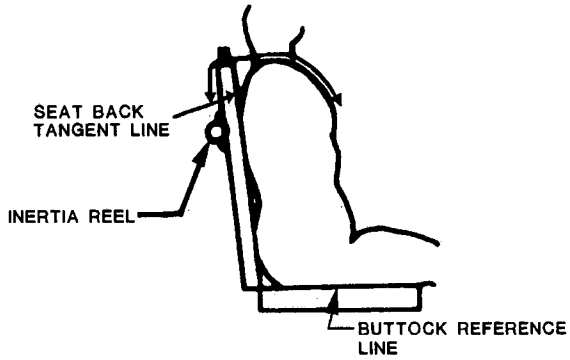
2 (SEE NOTE 2)	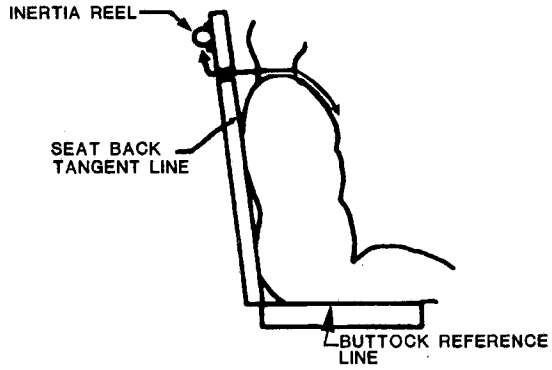
3 (SEE NOTE 3)	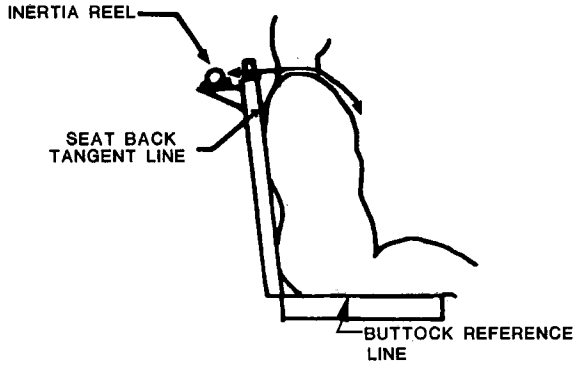

NOTES:

(1) Reel mounted paralled to seat back tangent, above webbing slot in seat.

(2) Reel mounted parallel to seat back tangent, below webbing slot in seat.

(3). Reel mounted perpendicular to seat back tangent.

FIGURE 20. Inertia reel mounting orientations

Downloaded from http://www.everyspec.com

ITEM IDENTITY

1. SEAT
2. RESTRAINT
   A. INERTIA REEL
   B. INERTIA REEL STRAP
   C. SHOULDER HARNESS
   D. LAP BELT
   E. TIEDOWN STRAP
3. DUMMY

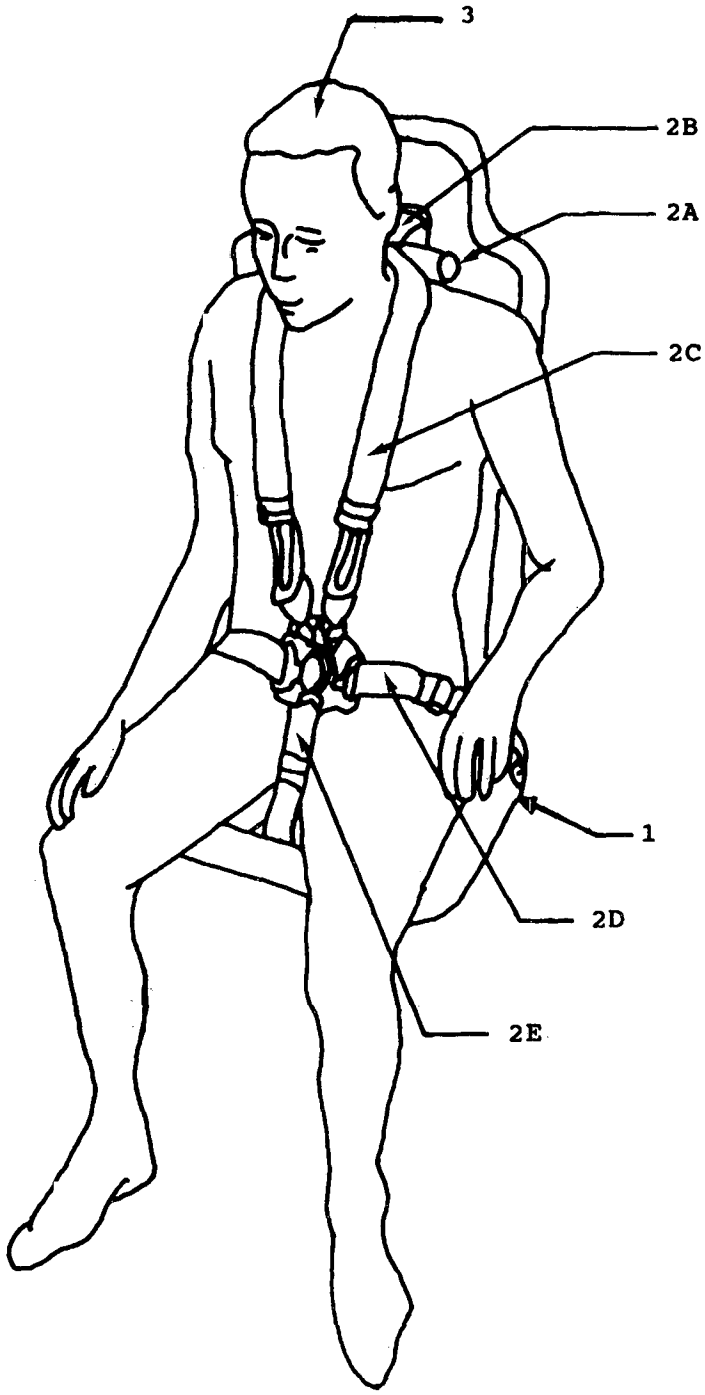

FIGURE 21. Seat, restraint and dummy configuration for dynamic crash tests

Downloaded from http://www.everyspec.com

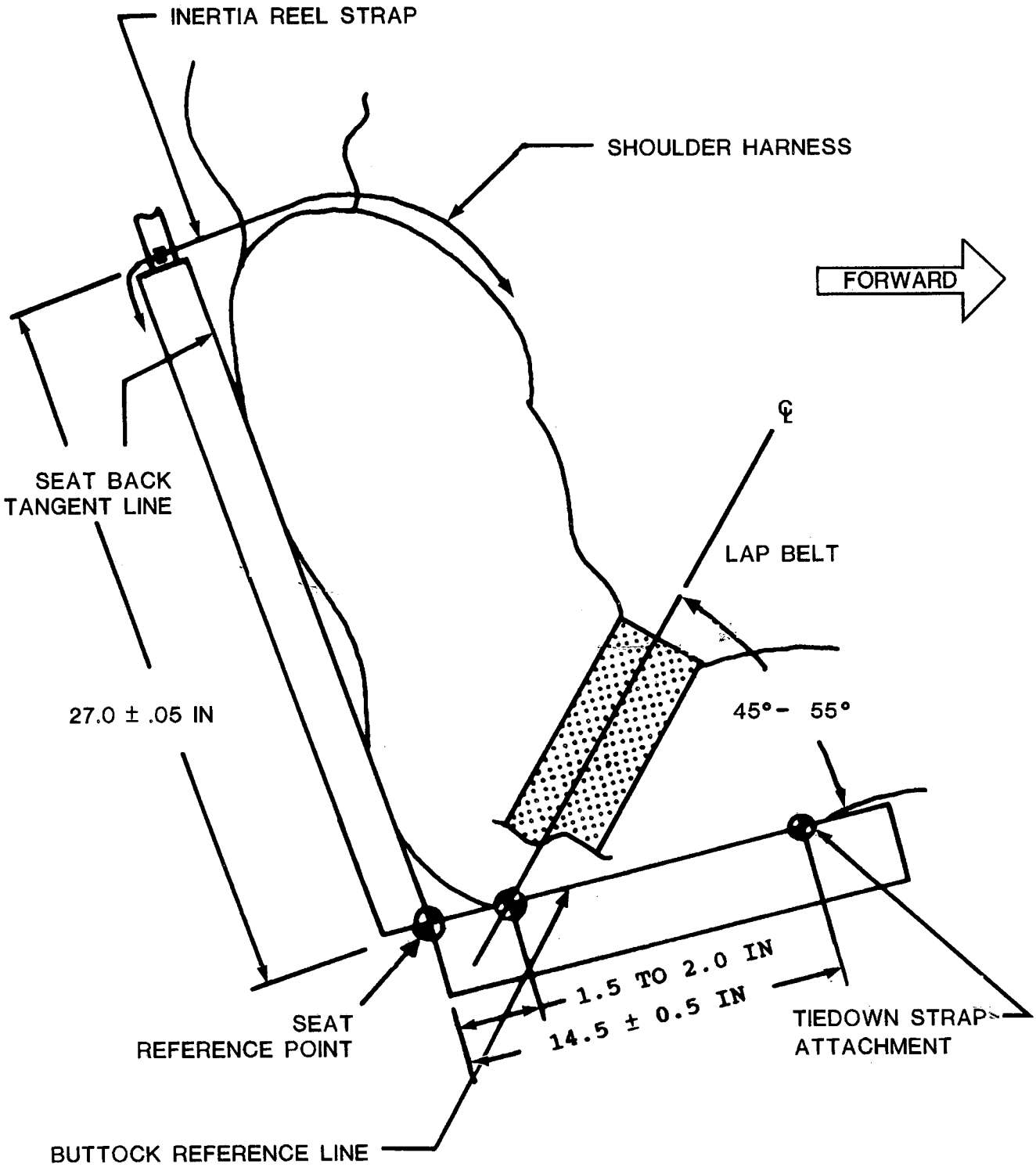

FIGURE 22. Seat dimensions and restraint attachment points for dynamic crash tests

Downloaded from http://www.everyspec.com

Custodians:
Army - AV
Navy - AS
Air Force - 99

Reviewers:
Navy - CG, MC

Preparing activity:
Air Force - 82

(Project 1680-0603)

Downloaded from http://www.everyspec.com

STANDARDIZATION DOCUMENT IMPROVEMENT PROPOSAL

INSTRUCTIONS

1. The preparing activity must complete blocks 1, 2, 3, and 8. In block 1, both the document number and revision letter should be given.
2. The submitter of this form must complete blocks 4, 5, 6, and 7.
3. The preparing activity must provide a reply within 30 days from receipt of the form.

NOTE: This form may not be used to request copies of documents, nor to request waivers, or clarification of requirements on current contracts. Comments submitted on this form do not constitute or imply authorization to waive any portion of the referenced document(s) or to amend contractual requirements.

I RECOMMEND A CHANGE:	1. DOCUMENT NUMBER	2. DOCUMENT DATE *(YYMMDD)*

3. DOCUMENT TITLE

4. NATURE OF CHANGE *(Identify paragraph number and include proposed rewrite, if possible. Attach extra sheets as needed.)*

5. REASON FOR RECOMMENDATION

6. SUBMITTER

a. NAME *(Last, First, Middle Initial)*	b. ORGANIZATION	
c. ADDRESS *(Include Zip Code)*	d. TELEPHONE *(Include Area Code)* (1) Commercial (2) AUTOVON *(If applicable)*	7. DATE SUBMITTED *(YYMMDD)*

8. PREPARING ACTIVITY

a. NAME	b. TELEPHONE *(Include Area Code)* (1) Commercial (2) AUTOVON
c. ADDRESS *(Include Zip Code)*	**IF YOU DO NOT RECEIVE A REPLY WITHIN 45 DAYS, CONTACT:** Defense Quality and Standardization Office 5203 Leesburg Pike, Suite 1403, Falls Church, VA 22041-3466 Telephone (703) 756-2340 AUTOVON 289-2340