Downloaded from http://www.everyspec.com

MIL-O-2414H(NU)
15 AUG 1988
SUPERSEDING
MIL-O-2414G(NU)
15 August 1984

MILITARY SPECIFICATION

OVERCOAT, MAN'S, ENLISTED

This specification is approved for use by the Navy Clothing and Textile Research Facility, Department of the Navy, and is available for use by all Departments and Agencies of the Department of Defense.

1. SCOPE

1.1 Scope. This specification covers the requirements for the enlisted man's double breasted service blue overcoat (pea coat).

1.2 Classification. The overcoat shall be of one type only and in the following sizes and lengths (see 6.2):

Sizes - 30, 32, 34, 36, 38, 40, 42, 44, 46, 48, 50, and 52

Lengths - short, regular, long, and extra-long

Beneficial comments (recommendations, additions, deletions) and any pertinent data which may be of use in improving this document should be addressed to: Officer in Charge, Navy Clothing and Textile Research Facility, 21 Strathmore Road, Natick, MA 01760-2490 by using the self-addressed Standardization Document Improvement Proposal (DD Form 1426) appearing at the end of this document or by letter.

AMSC/NA FSC 8405

Distribution Statement A. Approved for public release; distribution is unlimited.

Downloaded from http://www.everyspec.com

2. APPLICABLE DOCUMENTS

2.1 Government documents.

2.1.1 Specifications, standards, and handbooks. The following specifications, standards and handbooks form a part of this specification to the extent specified herein. Unless otherwise specified, the issue of these documents shall be thoes listed in the issue of the Department of Defense Index of Specifications and Standards (DoDISS) and supplelment thereto, cited in the solication.

SPECIFICATIONS

FEDERAL

C-F-206	- Felt Sheet: Cloth, Felt, Wool, Pressed
V-B-871	- Button, Sewing Hole, and Button, Staple (Plastic)
V-T-276	- Thread, Cotton
V-T-280	- Thread, Gimp, Cotton, Buttonhole
V-T-285	- Thread, Polyester
NN-P-71	- Pallet, Material Handling, Wood, Stringer Construction, 2 Way and 4 Way (Partial)
CCC-C-441	- Cloth, Corduroy, Cotton
DDD-L-20	- Label; for Clothing, Equipage, and Tentage (General Use)
DDD-L-86	- Tape, Textile, Cotton, General Purpose (Unbleached, Bleached, or Dyed)

MILITARY

MIL-C-297	- Cloth, Interlining, Cotton Warp, and Spun Hair-Wool, or Rayon Filling
MIL-B-371	- Braid, Textile (Tubular)
MIL-C-15011	- Pallet, Material Handling, Wood, Post Construction, 4 Way Entry
MIL-P-15064	- Pads, Shoulder and Sleeve-Head
MIL-C-15065	- Coat, Fronts
MIL-C-16290	- Cloth, Melton, Wool (Moth Proofed)
MIL-C-16375	- Cloth, Wigan, Cotton
MIL-B-17143	- Button, Insignia, (Anchor, Plastic, Black)
MIL-C-17155	- Cloth, Knitted, Nylon Fleece
MIL-B-17757	- Boxes, Shipping, Fiberboard, (Modular Sizes)
MIL-C-21852	- Cloth, Taffeta, Nylon
MIL-C-43525	- Cloth, Satin, Acetate or Rayon Face and Rayon or Cotton Back
MIL-T-43548	- Thread, Polyester Core: Cotton-, Rayon-, or Polyester-covered
MIL-C-43718	- Cloth, Twill, Polyester, Polyester and Cotton, Polyester and Rayon for Pockets
MIL-C-44192	- Container, Shipping and Storage, Coat (Hangar Pack)

Downloaded from http://www.everyspec.com

STANDARDS

FEDERAL

FED-STD-191 - Textile Test Methods
FED-STD-751 - Stitches, Seams, and Stitchings

MILITARY

MIL-STD-129 - Marking for Shipment and Storage
MIL-STD-147 - Palletized Unit Loads
MIL-STD-1391 - Provisions for Evaluating Quality of Overcoats, Men's

(Copies of specifications, standards, drawings, and publications required by contractors in connection with specific procurement functions should be obtained from the procuring activity or as directed by the contracting officer.)

2.1.2 Other Government documents, drawings, and publications. The following other Government documents, drawings, and publications form a part of this specification to the extent specified herein. Unless otherwise specified, the isues shall be those in effect on the date of the solicitation.

LAWS AND REGULATIONS

U.S. POSTAL SERVICE MANUAL

(Copies may be obtained from the Superintendent of Document, U.S. Government Printing Office, Washington, DC 20402.)

2.2 Other publications. The following document(s) form a part of this specification to the extent specified herein. Unless otherwise specified, the issue of the documents which are DOD adopted shall be those listed in the issue of the DODISS specified in the solicitation. Unless otherwise specified, the issues of documents not listed in the DODISS shall be the issue of the nongoverment documents which is current on the date of the solicitation.

NATIONAL MOTOR FREIGHT TRAFFIC ASSOCIATION, INC., AGENT

National Motor Freight Classification

(Applications for copies should be addressed to the American Trucking Association, ATTN: Traffic Department, 1616 P Street, N.W., Washington, DC 20036-1404).

UNIFORM CLASSIFICATION COMMITTEE, AGENT

Uniform Freight Classification

Downloaded from http://www.everyspec.com

(Application for copies should be addressed to the Uniform Classification Committee, Room 1106, 222 South Riverside Plaza, Chicago, Illinois 60606-5808).

THE COLOR ASSOCIATION OF THE UNITED STATES

Department of Defense Standard Shades for Buttons

Department of Defense Standard Shades for Sewing Threads

(Application for copies of color cards should be addressed to the Color Association of the U.S. Inc., 343 Lexington Avenue, New York, NY 10016).

TECHNICAL MANUAL OF THE AMERICAN ASSOCIATION OF TEXTILE CHEMISTS AND COLORISTS

Method No. 8 Colorfastness to Crocking: AATCC Crockmeter Method

(Application for copies should be addressed to the AATCC National Headquarters, P.O. Box 12215, Research Triangle Park, NC 27709-9989).

2.3 Order of precedence. In the event of a conflict between the text of this specification and the references cited herein, the text of this specification shall take precedence. Nothing in this specification, however, shall supersede applicable laws and regulations unless a specific exemption has been obtained.

3. REQUIREMENTS

3.1 Guide sample. Samples, when furnished, are solely for guidance and information to the contractor (see 6.3). Variations from this specification may appear in the sample in which case this specification shall govern.

3.2 First article. When specified, the contractor shall furnish sample unit(s) for first article inspection and approval (see 4.3 and 6.2).

3.3 Materials.

3.3.1 Basic material. The basic material shall be 22 ounce wool melton conforming to type II, class 4 of MIL-C-16290 shade Blue 3346.

3.3.2 Linings.

3.3.2.1 Lining, fleece. The knitted fleece material for lining the body shall conform to type III of MIL-C-17155 and shall be dyed to match Black 3234.

3.3.2.2 Lining, sleeves and yoke. The napped-back satin material for lining the sleeves and yoke shall conform to type II of MIL-C-43525 and shall be dyed to match Black 3202.

Downloaded from http://www.everyspec.com

3.3.3 Nylon binding. The binding for the back edge of facings, bottom raw edge and vent shall be nylon taffeta cloth conforming to type IV of MIL-C-21852. The color shall be black. The nylon shall be cut on a 45 (±5) degree angle in strips of 7/8 to 1 inch width. The ends of the strips shall be joined together by stitch type 301 and the seam type SSa-1 with 10-12 stitches per inch.

3.3.4 Pocketing.

3.3.4.1 Inside pockets. The material for the inside pocket and the cash pocket shall be polyester, polyester/cotton, or polyester/rayon twill conforming to class 1 of MIL-C-43718. The shade shall be natural or black. When a black shade is used, the colorfastness requirements for perspiration and crocking shall not apply.

3.3.4.2 Front pockets. The material for the front pockets shall be cotton corduroy conforming to type I, class 1 of CCC-C-441.

3.3.4.2.1 As an alternate, the material for the front pockets shall be a soft filled cotton flannel having a smooth suede finish on one side, in natural or gray shade and shall conform to the physical requirements shown in Table I when tested as specified in Table III.

TABLE I. Physical Requirements

Characteristics	Minimum
Weight (oz./sq. yd.)	6.0
Yarns per inch:	
Warp	44
Filling	40
Breaking strength (pounds):	
Warp	60
Filling	35

The use of sulphur dyes and dyes containing elementary sulphur or sulphur compounds capable of oxidation to sulphuric acid is prohibited. The dyed material shall show a minimum of good fastness to wet-dry cleaning and shall show an AATCC Rating for crocking not lower than 3 when tested as specified in Table III.

3.3.5 Interlining. The material for interlining the collar shall be cotton warp, and spun hair-wool filling conforming to type I, class 2 of MIL-C-297. The color shall be black, grey, or natural.

3.3.6 Wigan. The material for interlining the sleeve bottoms shall be cotton wigan, natural color, conforming to type I of MIL-C-16375.

* 3.3.7 Coat front. The coat front shall be manufactured in accordance with type XIX of MIL-C-15065.

Downloaded from http://www.everyspec.com

3.3.8 Shoulder and sleeve-head pads. The shoulder pads shall conform to type I, class 1 and the sleeve-head pads shall conform to type IV of MIL-P-15064.

3.3.9 Threads.

3.3.9.1 Cotton or covered polyester thread. The thread for seaming and stitching the overcoat shall be dyed Black AA Cable No. 66043 of DOD Standard Shades for Sewing Threads. Colorfastness requirements shall be in accordance with 3.3.9.3.3, and shall conform to V-T-276 or MIL-T-43548 (2 or 3 ply, except the use of the polyester-covered, polyester core thread is not allowed) when applicable, in the following types and sizes:

Use	Type 1/	Ticket No./ Ply 1/	Ticket No. 2/
Seaming and stitching	IC2	0/3	50
401 looper; 304 stitching	IC2	0/3	70
Tacking armholes and attaching sleeve-head pads	IA1 or IA2	30/3	30
Buttonholes and bartacks	IC2	A or B/3	30
Button sewing:			
Hand	IB3	12 or 16/4	30
Machine	IA3 or IB3	20/4	30

1/ Applies to V-T-276.
2/ Applies to MIL-T-43548.

3.3.9.2 Basting thread. Thread for basting and tacking may be bleached or unbleached and shall be of a good commercial grade cotton. A monofilament synthetic thread may be used for only those basting operations where the thread is required to be removed provided the garment is subsequently given a treatment by a cleaning agent in which the synthetic thread is soluble. When this thread is used, any residue remaining on the garment after the dry cleaning process shall be brushed or removed.

3.3.9.3 Felling thread.

3.3.9.3.1 Polyester thread. For machine felling and blind felling, polyester thread conforming to type I, size A/3 or AA/2 of V-T-285 or a monofilament nylon thread of comparable type and size shall be used. The color of the polyester thread shall be black.

3.3.9.3.2 Nylon thread. For hand felling, nylon thread conforming to type IV, size A/2 or C/2 of V-T-295 shall be used. The color shall be black.

3.3.9.3.3 Colorfastness. The dyed thread shall show colorfastness to wet-dry cleaning and light equal to or better than the standard sample when tested as specified in V-T-276, V-T-285, V-T-295, or MIL-T-43548. As a limit of acceptability, or when no standard is available, the dyed thread shall show a minimum of "good" colorfastness to wet-dry cleaning and light when tested as specified in V-T-276, V-T-285, V-T-295, or MIL-T-43548.

Downloaded from http://www.everyspec.com

3.3.9.4 Gimp. The gimp for reinforcing the buttonholes shall be thread, cotton, gimp, buttonhole conforming to type I or II, size No. 8 of V-T-280. The gimp shall be dyed black.

3.3.9.4.1 Colorfastness. The dyed thread shall show colorfastness to wet-dry cleaning equal to or better than the standard sample when tested as specified in V-T-280. As a limit of acceptability, or when no standard is available, the dyed thread shall show a minimum of "good" colorfastness to wet-dry cleaning when tested as specified in V-T-280.

3.3.10 Tapes.

3.3.10.1 Woven tape. The tape shall be cotton, preshrunk, conforming to type I, class 1 or class 2 of DDD-T-86. The widths shall be as follows:

1/2 inch for staying lapels, fronts and bottom edges
5/8 inch for staying bridle at breakline of lapel
1/4 inch for staying back armhole, lower part of front armhole, and fold line of left vent

3.3.10.2 Cross-cut tape. The tape for staying the front shoulder, neck gorge, back neckline and upperpart of front armhole shall conform to class 1 of MIL-C-43718. The tape shall be cut across the width of the cloth in strips 1/2 (±1/16) inch wide and shall be dyed or undyed. The raw edges of the tape shall be treated with a synthetic resin to prevent raveling when tested as specified in 4.4.1.

3.3.10.3 Tape, fusible. The tape for joining the fronts and facings shall be woven or non-woven with a thermoplastic polyamid resin applied to the tape. The tape shall be natural color and shall be 5/8 inch in width (see 4.4.1).

3.3.11 Buttons.

3.3.11.1 Plastic anchor design buttons. The outside buttons shall be class 2 (50 line) of MIL-B-17143.

3.3.11.2 Plastic button. The hidden plastic button for anchoring the left front on the inside of the coat shall be shade Black BT, Cable No. 62001 in accordance with DOD Standard Shade for Buttons, conforming to type II, class D, style 20 and 21, 45-line of V-B-871. As an alternate, the 50 line plastic anchor design button in paragraph 3.3.11.1 may be used.

3.3.12 Hanger loop. The hanger loop shall be cotton tubular braid conforming to type III, class 1 of MIL-B-371, except that the color shall be black. The dyed braid shall show good fastness to wet-dry cleaning and shall show an AATCC Rating for crocking not lower than 3 when tested as specified in Table III.

3.3.13 Labels.

3.3.13.1 Combination label. Each overcoat shall have a combination personal identification and instruction label that conforms to type VI, classes 10 and 15 of DDD-L-20. The printing on the label shall show fastness to dry cleaning. The label shall bear the following inscription:

Downloaded from http://www.everyspec.com

NAME:
SERVICE NO.:
OVERCOAT, MAN'S, ENLISTED (100% WOOL)
CONTRACT NO.: DLA 100-00-0-0000 (EXAMPLE)
NAME OF CONTRACTOR:
NAME OF MANUFACTURER: (If other than contractor)

DRY CLEAN ONLY

3.3.13.2 Size label. A separate label conforming to type VI, class 2 of DDD-L-20 shall indicate the size and stock number.

NOTE: The length (short, regular, long, or extra-long) may be abbreviated as S, R, L, or XL.

3.3.13.3 Removable size ticket. Each coat shall have a commercial type size ticket attached to the outside of the lower left sleeve. The ticket shall be 1-1/2 inches long and 2 inches high, made of a suitable plain white cardboard. The corners of the ticket may be double perforated for ease in tacking. The size (38R - Example) shall be printed or stamped on the upper left hand corner in black or blue ink. The lettering for the size shall be 1/4 inch in height. Abbreviations for lengths shall be allowed in accordance with 3.3.13.2.

3.4 Design. The double breasted overcoat is fleece lined (fleece side of lining away from the wearer), with napped-back satin sleeve and yoke linings, convertible collar, two outside slash pockets (Beason), a cash pocket within the right outside pocket, a right inside breast pocket opening on facing, a two-piece back with center vent, and seven 50-line black plastic anchor design buttons with one hidden anchoring button.

3.4.1 Figures. Figures are furnished for information purposes only. To the extent of any inconsistencies between the written specification and the figures, the written specification shall govern.

3.5 Patterns. Standard patterns to be used to cut working patterns will be furnished by the Government (see 6.3). The working patterns shall be identical to the Government patterns. Neither the Government patterns nor the working patterns shall not be altered in any way, except that additional notches for use during construction are permitted on the working patterns. Also, minor modifications are permitted where necessary when using automatic equipment. These modifications shall not alter the dimensional, serviceability, or appearance requirements cited in the specification. Unless otherwise specified in Table II, seam allowances shall be as follows:

Joining center back and side seams	1/2 inch
Joining shoulders, armholes, sleeves	3/8 inch
Joining facings to fronts	1/8 to 3/16 inch
Joining linings and yokes at sides and back	1/2 inch
Joining shoulders and sleeves of lining	3/8 inch
Joining undercollar to neckline	5/8 inch

Downloaded from http://www.everyspec.com

3.5.1 Pattern parts. The component parts of the overcoat shall be cut from materials as specified and in accordance with the number of parts required for the manufacturing process as follows:

Material	Nomenclature of pattern parts	Cut parts
Cloth, melton, wool	Front	2
	Back	2
	Front Facing	2
	Topsleeve	2
	Undersleeve	2
	Topcollar	1
	Topcollar (Alternate) 1/	1
	Undercollar Front	2
	Undercollar Back	2
	Front Pocket Facing (Beason)	2
	Pocket welt (inside breast pocket)	1
Cloth, lining, fleece	Front Lining	2
	Back Lining, Left Side	1
	Back Lining, Right Side	1
Cloth, lining, satin	Front Yoke	2
	Back Yoke	1
	Topsleeve	2
	Undersleeve	2
	Pocket facing (inside breast pocket)	1
Cloth, twill	Inside Breast Pocket	
	Inner ply	1
	Outer ply	1
	Cash Pocket	1
Cloth, corduroy, or flannel	Pocket, Top Ply	2
	Pocket, Bottom Ply	2
Cloth, interlining	Undercollar, Front	2
	Undercollar, Back	2
Cloth, wigan	Sleeve bottom; interlining	2
Templates	Undercollar Shaper	
	Undercollar Shaper (Alternate)	
	Lapel Shaper	
	Finished Collar and Lapel Shaper	

1/ Use with undercollar shaper (alternate)

3.6 Construction.

Downloaded from http://www.everyspec.com

3.6.1 Stitches, seams, and stitchings. Stitch, seam, and stitching types specified in Table II shall conform to FED-STD-751. Wherever two or more methods for seam or stitch types are given for the same part of the operation, any one may be used. Seam allowances shall be maintained with seams properly sewn so that no raw edges, runoffs, twists, pleats, puckers, or open seams result. All seams shall start and finish evenly. Thread tension shall be maintained so that there is no tight or loose stitching. Where stitch type 401 is used, the looper (under thread) shall be on the inside of the overcoat. Ends of all seams produced by stitch type 401 shall be caught in other seams or stitching. Unless otherwise specified, edgestitching shall be 1/2 inch from the folded edge. When no range or tolerance is given for gauge of stitching, 1/16 inch variation is permitted. Edgestitching shall be straight and parallel to the edge.

3.6.2 Thread breaks and ends of seams. Ends of all seams and stitchings, when not caught in other seams or stitchings, shall be backtacked not less than 3/8 inch. The ends of a continuous line of stitching (except label) shall be overlapped not less than 1/2 inch. The ends of the label stitching shall be overlapped not less than 3 stitches. Thread breaks (all stitch types) shall be secured by stitching back of the break not less than 1/2 inch. Skipped stitches or thread breaks may be repaired by using 301 stitch type.

3.6.3 Stitches per inch. The minimum and maximum number of stitches per inch shall be specified in Table II.

3.7 Manufacturing operations requirements. The overcoats shall be manufactured in accordance with operation requirements specified in Table II. The contractor is not required to follow the exact sequence of operations listed provided that the finished overcoats are identical to those produced by following the sequence of operations as listed in Table II. Minor modifications are permitted where necessary when using automatic equipment. These modifications shall not alter the dimensional, serviceability, or appearance requirements cited in the specification.

3.7.1 Shade and size marking. The component parts shall be marked or ticketed to insure a uniform shade and size throughout the overcoat. Any method may be used except:

(1) Corrosive metal fastening devices. No metal device or sew-on type marking shall be used on the satin lining.

(2) Adhesive type tickets which discolor or adhere to the material upon removal of tickets.

NOTE: The use of ink pad numbering machine, rubber stamp, or pencil is allowed, provided the numbering does not show on the outside of the overcoat and wherever possible, is covered by the seam allowance.

3.7.2 Pressing and fusing. All pressing operations referenced in Table II shall use a heated pressing iron and steam pressing machines designed specifically for the pressing operations being performed. Fusible tape shall be applied in accordance with the fusible manufacturer's recommended time, temperature, and pressure settings and in accordance with good commercial practice.

Downloaded from http://www.everyspec.com

3.7.3 Abbreviations in table of operations. The abbreviations used in Table II are as follows:

Stch	-	Stitch
in	-	inch
Ndl	-	Needle
Bob	-	Bobbin
Lpr	-	Looper
Mchne	-	Machine
Brtck	-	Bartack
Comrcl	-	Commercial
smlr	-	similar
Btnhl	-	Buttonhole
incl	-	including
dbl	-	double

Downloaded from http://www.everyspec.com

TABLE II - CONSTRUCTION OF OVERCOAT

No.	Operation	Stch Type	Seam/ Stch type	Stch in	Threa Ndl B L
1.	Cutting.				
	a. Cut the overcoats in strict accordance with the patterns provided which show size, shape, directional lines, and notches for proper assembly of all parts. Marking, spreading, and cutting procedures used shall be consistent with the precision results required for the proper construction of the overcoat. Perforated and plain paper markers are prohibited on the basic fabric. Felt back paper markers are permitted.				
	b. Cut the component woolen parts of the overcoat from one piece of material, except the undercollar parts and pocket facing and welt which may be cut from ends. When so cut, these parts shall approximate the shade of the corresponding overcoat. The basic material shall be spread in the lengthwise direction with the nap of all plies running in the same direction. Accordingly, when making markers, all patterns of the component woolen parts shall be positioned so that the nap on the completed overcoat will run in one direction, either up or down. The undercollar parts shall be shade marked and shall match each other when assembled. When alternate topcollar is used it may be die cut.				
	c. Cut the component lining parts of the overcoat from one piece of material.				
	NOTE: (1) The fleeced or pile side of the knit lining material shall be considered the back side, and the unfleeced side, or smooth surface, shall be considered the face and shall finish toward the wearer.				
	(2) The smooth, satin surface of the material for the yoke and sleeves shall be considered the face side.				

Downloaded from http://www.everyspec.com

TABLE II - CONSTRUCTION OF OVERCOAT

No.	Operation	Stch Type	Seam/ Stch type	Stch in	Threa Ndl	B L
2.	Replacement of defective components. During the spreading, cutting, and manufacturing process, components having material defects as specified in MIL-STD-1391, shall be removed from production and replaced with non-defective and properly matched components.					
3.	Shade and size marking. (see 3.7.1) All parts shall be marked or ticketed except inner breast pocket welt, inner breast pocket facing and beason pocket facing, to insure properly sized and matching components.					
4.	Make collar. a. The collar shall consist of a one-piece topcollar, a four-piece undercollar, and a four-piece interlining.					
	b. With face sides together, stitch 1/4 to 5/16 inch from edge along the undercollar center back seam, and seams joining center and end section.	301	SSa-1	12-14	50	5
	c. Press seams open and flat with a heated pressing iron.					
	d. With the edges overlapped 3/8 inch, stitch 3/16 to 1/4 inch from edge, along interlining center back seam, and seams joining center and end sections.	301	LSa-1	12-14	50	5
	e. Mark breakline of undercollar to conform with notches on pattern.					
	f. Undercollar may be shaped with the alternate undercollar shaper.					
	g. Stitch interlining to undercollar at breakline mark.	301	SSv-1	12-14	50	5
	h. Blindstitch interlining to undercollar between breakline and outer edge of undercollar with not less than four equally spaced rows of stitching and between breakline and neck edge of undercollar with not less than two equally spaced rows of stitching.	Hand or 103 or 306	SSm-6	2-4 4-8 4-8	50 50 50	 5

Downloaded from http://www.everyspec.com

TABLE II - CONSTRUCTION OF OVERCOAT

No.	Operation	Stch Type	Seam/ Stch type	Stch in	Threa Ndl	B L
	i. Crease undercollar at breakline and press on a suitable pressing buck. Center area of creaseline shall be straight for a distance of 3 to 4 inches.					
	j. Unless alternate undercollar shaping is performed as prescribed in operation 4.f., mark and shape the undercollar with undercollar shaper.					
	k. Trim, where necessary, ends and outer edge of undercollar interlining. Trim interlining not more than 3/16 inch from the neck edge of undercollar.					
	l. Position, face to face, center of topcollar to center seam of undercollar. Stitch the topcollar to the undercollar 3/16 inch from edge, along the ends and outer edge putting fullness on topcollar, and making certain points are uniformly shaped. Trim excess topcollar material.	301	SSa-1	12-14	50	5
	NOTE: Use the topcollar cut from the alternate topcollar pattern when undercollar is shaped with the alternate undercollar shaper (see operation 4.f.). Omit trimming.					
	m. Turn collar to finished position. Baste along ends and outer edge, distributing the collar fullness evenly and rolling the joining seam to the underside. Trim neck edge of topcollar to allow for seaming and proper roll.	Hand or Mchne				
	n. Press collar, stretching the outer edge to conform to the shoulder contours, and removing excess fullness.					
5.	Make sleeves.					
	a. Sleeves shall be set-in type consisting of a topsleeve and undersleeve.					
	b. With face sides together, distribute fullness of the forearm seam of woolen sleeve, align notches and stitch 3/8 inch from raw edge.	301 or 401	SSa-1	12-14	50 50	5 7

Downloaded from http://www.everyspec.com

TABLE II - CONSTRUCTION OF OVERCOAT

No.	Operation	Stch Type	Seam/ Stch type	Stch in	Threa Ndl	B L
	c. Press forearm seam open and flat holding seam short.					
	d. Superimpose sleeve bottom interlining on inside of sleeve bottom, matching raw bottom edges. Stitch 3/8 inch from edge.	301 or 401	SSa-1	10-12	50 50	5 7
	e. Join, 3/8 inch from edge, face to face, the backarm seam of woolen sleeve, catching the ends of the sleeve bottom interlining in the seam.	301 or 401	SSa-1	12-14	50 50	5 7
	f. Press backarm seam open and flat.					
	g. Turn up the sleeve bottom according to the notches, back side to back side, forming an even hem, and edgestitch 1/2 inch from folded edge.	301	OSf-1	12-14	50	5
	OR					
	As an alternate, sleeve hems may be pre-pressed or tacked as indicated by marks on pattern, and edgestitched following stitching of lining to sleeve bottom (see operation 19.)					
6.	Make inside breast pocket.					
	a. Turn under lower raw edge of pocket facing and stitch to outer pocket ply according to marks on pattern.	301	LSd-1	12-14	50	5
	b. Position the combination label ajacent to the turned pocket facing and stitch on all four sides. The label shall be in the upright position and shall face the wearer when worn. The right side of the label may be caught in the stitching of the pocket facing in operation 6a. The stitching shall not be through the printing.	301	LSbj-1	12-14	50	5
	c. Position the welt piece on the face side of the facing, with the outer ply of the pocket on underside (as indicated on the patterns as a solid line for the cut opening for the pocket), and stitch the welt and outer ply of pocket to the facing with two parallel rows of stitching.	301	SSv-2	12-14	50	5

Downloaded from http://www.everyspec.com

TABLE II - CONSTRUCTION OF OVERCOAT

No.	Operation	Stch Type	Seam/ Stch type	Stch in	Threa Ndl	B L
	d. Cut opening between the parallel rows of stitching through all plies simultaneously, and notch to ends of each row of stitching. Turn under outer ply of pocketing, welt and facing through the opening and topstitch forming a 1/8 to 3/16 inch welt.	301	SSbe-2(b)	12-14	50	5
	e. Turn in other raw edge of welt and stitch to inner ply of pocketing.	301	SSa-1	12-14	50	5
	f. Raise stitch other pocket opening edge, forming a 1/8 to 3/16 inch welt. Turn pocketing towards armhole.	301	SSbe-2(b)	12-14	50	5
	g. Tack ends of pocket opening 1/4 to 3/8 inch through welt, facing and pocketing.	301		12-14	50	5
	OR					
	h. Operations c amd d above may be accomplished with a double welt pocket machine which stitches, cuts and turns welt edges in one operation. When this machine is used, the welt piece may be trimmed to permit insertion into the machine. The thread shall be in accordance with the machine manufacturer's recommendation.	101 or 301		12-14		
	AND					
	i. Raise stitch the pocket opening. The ends of the pocket opening shall be tacked.	301		12-14	50	5
7.	Make lining.					
	a. With face sides together, align notches and stitch centerback seam of lining, 1/2 inch from raw edges, ending stitching at the notch which indicates top vent.	301 or 401	SSa-1	12-14	50 50	5 7
	b. With face sides together, align bottom raw edge of back and front yoke pieces with notches of fleece lining pieces, positioning the top of the yokes toward the bottom of the lining. Stitch 3/8 inch from raw edge of yokes and turn up to finished position.	301 or 401	SSa-1	12-14	50 50	5 7
	c. Stitch yoke to lining, 1/4 inch from raw edges, along shoulders, sides, fronts, around armholes and at neck line (disregard notches on pattern for pleat and distribute fullness along back neckline).	301 or 401	SSa-1	10-12	50 50	5 7

Downloaded from http://www.everyspec.com

TABLE II - CONSTRUCTION OF OVERCOAT

No.	Operation	Stch Type	Seam/ Stch type	Stch in	Threa Ndl	B L
	d. Bind the back raw edge of the front facing, bottom coat hem, and left and right vent openings along edges.	301 or 401	BSc-1	12-14	50 50	5 7
	e. Position the back (bound) edge of the facing over the front edge of the front yoke/lining assembly, both parts face up, overlapping 3/4 inch, and stitch the facing to the lining adjacent to binding stitch, with the pocket folded out of the way, distributing fullness in the yoke/lining assembly so that the bottom raw edge of the lining finishes even with the bottom raw edge of the facing, with the stitching ending 1-1/4 inches from the bottom of the lining. Fold pocket towards the armhole.	301 or 401	LSa-1	12-14	50 50	5 7
	f. With face sides together, stitch side seams of yoke/lining assemblies 1/2 inch from raw edges, matching the bottom turned edges of the yokes.	301 or 401	SSa-1	12-14	50 50	5 7
	g. Join the lining shoulder seams, 3/8 inch from the raw edges.	301 or 401	SSa-1	12-14	50 50	5 7
	h. With face sides together, stitch forearm and backarm sleeve lining seams 3/8 inch from raw edges.	301 or 401	SSa-1	12-14	50 50	5 7
	i. With face sides together and matching seams, distribute fullness of sleeve linings into lining armhole and stitch 3/8 inch from the raw edge.	301	SSa-1	12-14	50	5
	j. Center the size label on the face side of the back yoke/lining assembly, with the top edge 2-1/2 (± 1/4) inches below the top raw edge of the neck. Stitch label on all four sides without obscuring the printing.	301	LSbj-1	12-14	50	5

Downloaded from http://www.everyspec.com

TABLE II - CONSTRUCTION OF OVERCOAT

No.	Operation	Stch Type	Seam/ Stch type	Stch in	Threa Ndl	B L
8.	Make outside vertical slash pockets.					
	a. Each front shall have a double welted beason style pocket. The right front pocket shall include a patch type cash pocket on the inside bottom ply. The napped or pile side of the pocketing shall finish on the inside of the pocket.					
	b. Stitch, face to face, the woolen front pocket facing (beason) piece to top ply of pocketing, 3/8 inch from raw edge.	301	SSa-1	12-14	50	5
	NOTE: When automatic pocket welt machine is used, pocketing and beason shall be joined following welting (operation 8.i.).					
	c. Stitch, face side up, the woolen front pocket facing piece (beason) to bottom ply of pocketing.	301	LSbj-1	12-14	50	5
	d. Fold cash pocket piece in half as indicated by marks on patterns.					
	e. Position the cash pocket on the inside bottom ply of right pocket. Stitch 3/8 inch from the raw edges through all plies of material, the side and bottom edges of the cash pocket.	301 or 401	LSbj-1	12-14	50 50	5 7
	Note: The side edge of the cash pocket may be inserted under the front pocket facing (beason) during operation 8.c.					
	f. The top edge of the cash pocket shall finish 6 (± 1/4) inches from bottom raw edge of front pocket. The front raw edge of the cash pocket shall finish 2 (± 1/4) inches from front raw edge of front pocket.					
	g. Both the finished opening and depth of the cash pocket shall be 3-1/2 (± 1/4) inches.					
	h. Position face side of top ply pocket assembly on the outside of each front as indicated by marks on pattern. Double stitch 3/8 to 1/2 inch gauge and cut midway between the two parallel rows of stitching, tongue notching ends of opening. Turn pocket through opening.	301	SSbe-2(a)	12-14	50	5

Downloaded from http://www.everyspec.com

TABLE II - CONSTRUCTION OF OVERCOAT

No.	Operation	Stch Type	Seam/ Stch type	Stch in	Threa Ndl	B L
	i. Form and top stitch a 3/16 inch wide welt on each side opening, simultaneously catching the facing/bottom ply of pocketing assembly on the underside at the back edge of the opening (nearest side seam). Stitching shall be straight, parallel, and within 1/16 inch of the welt seam. Turn back the bottom ply of pocketing prior to topstitching front edge.	301	SSbe-2(b)	12-14	50	5
	OR					
	As an alternate, opening may be topstitched without simultaneously catching the facing/bottom ply of pocketing assembly. Stitching of assembly to welt area may be accomplished in a separate operation by positioning pocketing assembly on inside and either superimposing stitching on the welt topstitching through all plies, or attaching back edge of the pocketing to the free welt edge.	301		12-14	50	5
	j. Operation 8.h. may be accomplished with a double welt pocket machine which stitches, cuts, and turns welt edges in one operation. When this machine is used, the beason piece may be trimmed to permit insertion into the machine. The joining seams of the beason piece shall be topstitched through front and all plies of material as in operation 8.i. The contractor may utilize the machine manufacturer's recommended pocket stay material.	101 and 301		12-14	30 50	 5
	k. Topstitch the length of the pocket opening on each side 1/2 to 5/8 inch from the pocket opening and parallel to the finished edge of the pocket and the previous row of topstitching. The bottom ply of the pocketing shall be turned back before stitching front edge of pocket. Stitching shall end not more than 1/8 inch beyond ends of pocket.	301	SSv-1	12-14	50	5

Downloaded from http://www.everyspec.com

TABLE II - CONSTRUCTION OF OVERCOAT

No.	Operation	Stch Type	Seam/ Stch type	Stch in	Threa Ndl	B L
	1. Close pocketing 1/2 to 5/8 inch from inner raw edge, around outer and bottom edges and up inside edge to bottom of welt catching ends of beason facing and facing pieces. Note: Pocket edges may be staggered up to 1/2 inch.	301	SSa-1	12-14	50	5
	m. Starting at ends of the outermost rows of parallel stitching, stitch uniformly to a point 1 (± 1/8) inch from each end of pocket opening through all plies, catching pocketing at both ends.	301	SSv-1	12-14	50	5
	n. Stitch a single 1 to 1-1/4 inch bartack or two 1/2 to 5/8 inch bartacks perpendicular to the pocket opening at each end of the pocket, connecting the parallel rows of stitching (see figure 2 detail).	Brtck		56 per (1 to 1-1/4") brtck or 28 per (1/2 to 5/8") brtck	30	3
	o. The finished pocket opening shall measure 6-3/4 (± 3/8) inches long.					
*9.	Baste coat fronts to fronts. a. Make coat front in accordance with 3.3.7					
	b. Baste coat front to its respective front as follows: 1. Along center of coat front. 2. Across shoulder. 3. Around armhole and down back edge. 4. Along breakline of lapel. 5. Down lapel and front edge. 6. Tack the front edge of pocket to coat front.	Hand or Mchne		Comrcl		

Downloaded from http://www.everyspec.com

TABLE II - CONSTRUCTION OF OVERCOAT

No.	Operation	Stch Type	Seam/ Stch type	Stch in	Threa Ndl	B L	›/ :
	c. Position a 5/8 inch wide bridle stay tape just behind the breakline of each lapel. The bridle stay shall extend sufficiently above gorge to permit catching the stay in the gorge seam tacking and to within 1-1/2 inches of bottom of lapel breakline. Baste tape even and smooth for a distance of 1-1/2 to 2 inches from gorge, then hold tape taut for a distance of 4 to 5 inches to work in not less than 3/8 inch chest fullness. Tape and coat front may be stamp marked with a double line, spaced for proper fullness. When so marked, match the upper mark on the tape with the lower mark on the coat front and evenly distribute the fullness above the marks. The balance of the tape shall be basted without tautness or fullness.	Hand or Mchne			Comrc		
	d. Pad each lapel of overcoat with not less than seven equally spaced rows of blind stitching. Fullness shall be equally distributed between rows of stitching in order to roll lapel.	103 or 306	SSm-7	4-6	50 50	 5	
	e. Blindstitch both edges of bridle stay to coat front.	103 or 306	SSm-2	4-8	50 50	 5	
	f. After the lapels are padded, fronts shall be pressed individually on a suitable buck to smooth out excess fullness. (See 15a)						
10.	Make backs and form vent.						
	a. Join back pieces 1/2 inch from edge, face to face, to form a center back seam. The bottom of the center back stitching shall terminate 1/2 inch below the top of the vent.	301 or 401	SSa-1	12-14	50	5	
	b. Notch top of right vent and press seam open and flat.						
	c. Stitch a 1/2 inch wide woven tape to back at neckline.	301	SSaa-1	12-14	50	5	
	d. Stitch a 1/4 inch wide woven tape adjacent to the length of the left side of vent at fold.	301	SSaa-1	12-14	50	5	

Downloaded from http://www.everyspec.com

TABLE II - CONSTRUCTION OF OVERCOAT

No.	Operation	Stch Type	Seam/ Stch type	Stch in	Threa Ndl	B L
	f. Fold left vent to inside in line with the center back seam and press.					
11.	Stitch tapes and join sides.					
	a. Stitch a 1/2 inch wide cross-cut tape to front neck gorge.	301	SSaa-1	10-14	50	5
	b. Stitch a 1/2 inch wide cross-cut tape on each front shoulder 3/4 to 1 inch from gorge to within 1/2 to 3/4 inch from armhole.	301	SSaa-1	12-14	50	5
	c. Stitch a 1/2 inch wide cross-cut tape on front armhole from 2 to 2-1/2 inches of armhole notch to within 1/2 to 3/4 inch from shoulder.	301	SSaa-1	12-14	50	5
	d. Stitch a 1/4 inch wide woven tape to lower part of front armhole from 1 inch of side seam to approximately 3/8 inch beyond cross-cut tape on upper part of front armhole.	301	SSaa-1	12-14	50	5
	e. Join, 1/2 inch from edge, face to face, the fronts and back at sides.	301 or 401	SSa-1	12-14	50 50	5 7
	f. Press seams open and flat.					
	g. Stitch a 1/4 inch wide woven tape on back armhole 1/2 to 3/4 inch from top of shoulder to approximately one inch in back of side seam, holding tape taut to draw up material and working in proper fullness.	301	SSaa-1	12-14	50	5
	NOTE: As an alternate, armholes may be taped in one operation.					
	h. Press the taped area of the armhole shrinking in fullness.					
12.	Join shoulder seams.					
	a. Join shoulder seams of overcoat, 3/8 inch from edge, evenly distributing fullness on back. The seam should curve slightly towards front.	301	SSa-1	12-14	50	5

Downloaded from http://www.everyspec.com

TABLE II - CONSTRUCTION OF OVERCOAT

No.	Operation	Stch Type	Seam/ Stch type	Stch in	Threa Ndl	B L	›/
	b. Press shoulder seam open over a suitable block to finish smooth and flat, curving slightly toward front.						
13.	Set sleeves, shoulder pads, and sleevehead pads.						
	a. Stitch sleeve to armhole 3/8 inch from the raw edge, matching notches and easing fullness as indicated on pattern. Ease in fullness of sleeve so that set sleeve in finished overcoat is free of wrinkles or puckering at armhole seam.	301	SSa-1	12-14	50	5	
	b. Press fullness of sleeve flat around armhole, taking care not to stretch or distort armhole.						
	c. Baste the shoulder pad to the armhole-sleeve seam outlet, centered over the shoulder seam, with the raw edge of the pad even with the raw edge of the armhole. The shoulder pad shall be attached with no distortion or pleats.	Hand or mchne			Cmrcl		
	d. Tack all around armhole through all plies of material.	301 or hand	SSa-1	4-6	50	5	
	NOTE: When armholes are tacked by machine, a loose but properly formed and elastic stitch may be used. When armholes are tacked by hand, tacking shall be backstitched every other stitch from front notch to side (underarm) seam across top of armhole.						
	e. Trim away excess interlining, canvas, and shoulder pad to 3/8 inch from armhole seam.						
	f. Tack the sleevehead pad to the armhole seam outlet from the lower front armhole notch to the back seam of the sleeve, adjacent to, but not beyond the armhole-sleeve joining seam, through all plies. The row of stitching shall start and finish no less than 1 inch beyond the length of the sleevehead.	301	SSa-1	4-6	50	5	

Downloaded from http://www.everyspec.com

TABLE II - CONSTRUCTION OF OVERCOAT

No.	Operation	Stch Type	Seam/ Stch type	Stch in	Threa Ndl	B L
	NOTE: The shoulder pad may be simultaneously tacked with the sleevehead.					
	g. Insert round edges of the shoulder pad between coat front interlining.					
14.	Miter vent corner.					
	a. Turn up bottom hem at left vent edge, face to face, according to the 1-1/4 inch hem indicated and seam along the inner side of the folded vent edge. Trim excess material to eliminate bulk and turn back to finished position forming a square corner, with the seam hidden on the underside of the turnup, without twisting or distortion.	301	SSa-1	12-14	50	5
15.	Shape fronts.					
	a. Press front edge, lapel and chest of right and left fronts individually on a suitably shaped pressing block conforming to the shape of the body. (If not previously accomplished, see 9f)					
	b. Mark and shape lapels in accordance with lapel shaper.					
	c. Trim lapel, front, and bottom edges of facing, matching vent lengths.					
	d. Trimming of lapels, front, and bottom edges of facing may be performed simultaneously with taping of front edges.					
	e. Trim interlining 1/4 to 3/8 inch back from top and front edges of lapel and fronts.					
16.	Join facings and fronts with tape.					
	a. With face sides together, baste facings with attached linings to fronts, putting in proper lapel and chest fullness.	Hand or Mchne			Comrc	
	b. Join the facings and fronts together with a 1/2 inch wide woven tape 1/8 to 3/16 inch from edges. The tape shall extend from 1/2 inch in back of lapel notch, down front and across bottom of overcoat extending not less than 3 inches beyond back edge of facing.	301	SSab-1	12-14	50	5

Downloaded from http://www.everyspec.com

TABLE II - CONSTRUCTION OF OVERCOAT

No.	Operation	Stch Type	Seam/ Stch type	Stch in	Threa Ndl	B L
	c. Blindstitch back edge of tape to edge of coat front interlining from top of lapel (notch) to bottom of coat.	103 or 306	SSm-1	4-6	50 50	 5
	NOTE: As an alternate to operations b. and c., a 5/8 inch fusible tape may be used in lieu of the 1/2 inch woven tape. When this method is used, the tape shall be fused to the interlining and the back edge in lieu of blindstitching.					
	d. Press front edges flat and smooth removing fullness.					
	e. Remove all basting stitches, trim lower front corner of facings, corners of lapels, gorge seam, and notch lapels for proper turning.					
	f. Spread open the front facing seam from lapel notch to bottom edge of overcoat and press smooth and flat.					
17.	Make vent. a. Fold the edge of the right vent lining 1/4 to 3/8 inch and align it 1/4 inch from the bound edge of coat vent. Stitch 1/16 to 1/8 inch along the folded edge of lining. The bottom raw edge of the fleece lining shall end about 1/8 inch above the folded hem with the row of stitching starting at the top of the vent opening, and ending at the bottom folded edge of the turnup.	301	SSb-1	12-14	50	5

Downloaded from http://www.everyspec.com

TABLE II - CONSTRUCTION OF OVERCOAT

No.	Operation	Stch Type	Seam/ Stch type	Stch in	Threa Ndl	B L
	b. Lap the bound edge of the left wool vent over the lining, both parts face up, positioning the top of the wool vent at the top of the lining vent opening. Topstitch the wool vent to the lining, with the row of stitching superimposed on the binding stitching. The bottom raw edge of the vent lining shall be inserted within the pre-finished corner, and end inside the folded bottom edge. Only the wool vent outlet and vent edge of the lining shall be stitched together, and care shall be taken to avoid twisting or puckering. Lining shall lay smooth with no distortion around, or bunching in, the vent or corner of hem. Excess lining material may be trimmed.	301	LSa-1	12-14	50	5
18.	Baste front and bottom edges.					
	a. Turn facings to finished position, rolling seam slightly to the underside in the lapel area, and to the inside along the front edge, and baste along front and bottom edges.	Hand or Mchne				
19.	Set collar.					
	a. Stitch topcollar to front facing at gorge to a point not less than 1 inch back of lapel breakline. Notch seam allowance of gorge facing at end of stitching. Spread gorge seam open and tack, catching bridle tape and canvas interlining in the tacking and continue stitching topcollar to neckline across front facing and back through all plies of material 3/8 inch from edge positioning ends of hanger loop aside the edges of size label, centered at center back (± 1/2 inch). The finished hanger loop opening shall measure 2 to 2-1/2 inches and the size label printing shall be exposed.	301	SSa-1	12-14	50	5
	b. Baste undercollar to neckline of collar with center seam of undercollar matching center back seam using a 5/8 inch seam allowance. The basting shall put poper fullness over the shoulders.	Hand or Mchne				

Downloaded from http://www.everyspec.com

TABLE II - CONSTRUCTION OF OVERCOAT

No.	Operation	Stch Type	Seam/ Stch type	Stch in	Threa Ndl B L	›/
	c. Fell edge of undercollar to neckline and securely hand tack corners of undercollar to lapel at notch. The raw edge of the undercollar shall be enclosed within the felling.	Hand or Mchne Hand type		8-10 6-8	See 3.3.9	3
	d. The finished collar shall measure 3-1/2 (± 1/4) inches wide at center back (measured from breakline to collar edge).					
	e. The width of the collar from the finished edge of neckline to the breakline of topcollar shall be 1-1/4 (± 1/16) inches wide at center back.					
	f. The collar and lapel shall be equal in length at the notch.					
	g. The finished notch opening shall measure 3-1/2 (± 1/4) inches deep.					
20.	Join sleeve bottoms and tack linings.					
	a. With face sides together, stitch 1/2 inch from the raw edges along the bottoms of the wool sleeve and sleeve lining, matching the forearm and backarm seams.	301	SSa-1	12-14	50	5
	b. Tack the sleeve lining to the wool sleeve approximately 2 inches from the turned up raw edge of the wool sleeve, at the forearm and backarm seam allowances. The sleeve lining shall be tacked to the wool sleeve for a length of not less than 6 inches, and shall be positioned with sufficient fullness below the tack to provide an approximately 1/4 inch bellows at the bottom of the finished sleeve lining, and leaving sufficient lining above the tack to prevent the lining from pulling or distorting the wool sleeve.	301	SSa-1	8-10	50 or cm	5 :l
	c. Tack the armhole seam outlets of the wool and lining together for a distance of not less than 2 inches, approximately centered over and matching the shoulder seams. The tacking shall be positioned as close to the sleevehead tacking as possible and shall be free of twisting or distortion.	301	SSa-1	8-10	50 or cm	5 :l

Downloaded from http://www.everyspec.com

TABLE II - CONSTRUCTION OF OVERCOAT

No.	Operation	Stch Type	Seam/ Stch type	Stch in	Threa Ndl	B L
21.	Complete edgestitching and vent.					
	a. Continuously edgestitch along the collar, lapel, fronts, and bottom of the facing, 1/2 inch from the forced-out, basted, folded edge. The lapel topstitching shall form a right angle at the base of collar notch, extend 5/8 inch along gorge seamline and continue around collar at 1/2 inch gauge (see Figure 3). Turn up the bottom edge of the coat 1-1/8 to 1-1/4 inches over bottom raw edge of the lining. Continue edgestitching 1/2 inch gauge, creating a right angle step up to the bound hem edge on the inside edge of the facing, with the stitching superimposed on the binding at the back edge of the facing, approximately 1 inch from bottom edge of coat. Continue stitching around the bottom of the overcoat on the binding, catching the bottom of the lining in the stitching. The lining shall be slightly full, but shall not fold over itself or over the bound hem edge in the finished coat. The hem shall be even and smooth with no twisting or distortion. The lining shall not be bunched in the hem. Continue edgestitching up the left vent, 1/2 inch from the folded edge, terminating at the top of the vent.	301	SSae-2(b) and smlr to SSbc-1	12-14	50	5
	b. Form two parallel, diagonal rows of stitching, through all plies at the top of the left vent positioned diagonal to center back seam (approximately 80 degrees) with the ends of the parallel stitching inclined towards the front and bottom of the overcoat. The finished parallel rows shall measure 2 (± 1/4) inches long, and 1/2 (± 1/8) inch apart. The bottom row of stitching shall cover the top of the vent edgestitching which shall not extend beyond the lower row of stitching by more than 2 stitches. OR As an alternate, a parallelelogram may be used with the same measurements as stated above.	301	SSv-2	12-14	50	5

Downloaded from http://www.everyspec.com

TABLE II - CONSTRUCTION OF OVERCOAT

No.	Operation	Stch Type	Seam/ Stch type	Stch in	Threa Ndl	B L	›/
22.	Mark and stitch buttonholes.						
	a. Press lapel and front edges prior to marking and making buttonholes.						
	b. All buttonholes shall be eyelet end, square bar, cut first, and reinforced with gimp with the stitching securely caught in the fabric. The buttonholes shall be clean and correctly positioned with the purling finishing on the outside. Buttonhole gimp shall be pulled through to the underside. The ends of all buttonholes shall be securely tacked, catching the ends of the gimp, and of sufficient width to cover the bar. The tack shall be perpendicular and centered with respect to the cut in the buttonhole.						
	c. The inside purled eyelet edge on front and lapel buttonholes shall be 3/4 (± 1/8) inch from the finished edge, vertically aligned, and equally spaced.						
	d. Mark and stitch as indicated by marks on pattern, three 1-1/4 to 1-3/8 inches horizontal buttonholes on the left front and one on the right front to correspond with the center buttonhole on the left front. Mark and stitch the same size buttonhole on each lapel, parallel to and 1-1/2 (± 1/8) inches from the finished top edge of the lapel. The purling of the lapel buttonholes shall finish on the outside of the lapel. The purling of the other front buttonholes shall finish on the outside of the front.	Btnhl	Size Btnhl 1-3/8 1-1/2	71-75 80-85 not incl brtck	30	3	
	e. Tack the ends of each buttonhole as indicated in operation 21.b. The buttonhole tacking may be performed by hand or separate machine.	Brtck or hand		21-22 per brtck 10-14 per brtck	30 30	3	
23.	Cleaning.						
	a. Remove all basting threads.						
	b. All ends of stitching shall be trimmed and loose threads removed from the overcoat.						

Downloaded from http://www.everyspec.com

TABLE II - CONSTRUCTION OF OVERCOAT

No.	Operation	Stch Type	Seam/ Stch type	Stch in	Threa Ndl B L
	c. All spots, stains, and marking tickets shall be removed without injury to the material.				
	d. Attach removable size ticket to outside of lower left sleeve.	Hand or mchne	2-4 stitches per tack 6-8 stitches per tack		
24.	Pressing. Finished appearance. Edges of the collar, lapels, fronts and bottoms shall be smooth and flat. Shoulders shall be molded and shaped to body contours with no excess fullness. The fronts, sides and backs shall be smooth and flat with no excess fullness. The left vent shall lap smoothly over the right with no distortion or pressing impressions at the back of the overcoat. Fullness in the tops of the sleeves shall be shrunk in. Sleeves shall roll smoothly with no breaks, twists, or creases. The collar breakline shall be maintained with a soft crease and the collar edges shall be shaped and stretched over the shoulders. Lapel notches (gap between top edge of lapels and collar ends) shall be uniform. The break line crease shall extend from the gorge line midway into the lapel. The remaining lapel shall roll at the breakline. Fullness (shaping) over topcollar, lapel facing and the lower left coat front shall be maintained so that they roll inward, allowing their edges to rest against the body of the overcoat. The collar and lapels shall finish uniform and in accordance with the finished collar and lapel shapers.				
	a. Press the edge of lapels, fronts, collar, and bottom of the overcoat on edge pressing machine.				
	b. Press entire body of overcoat complete on suitable pressing machine.				
	c. Roll press sleeves.				

Downloaded from http://www.everyspec.com

TABLE II - CONSTRUCTION OF OVERCOAT

No.	Operation	Stch Type	Seam/ Stch type	Stch in	Threa Ndl B L
	d. Press collar on suitable collar pressing machine stretching outer edge of collar over shoulder area.				
	e. Press armholes and shoulders on armhole or shoulder machine.				
	f. Press armhole solid from the inside, creasing the armhole from not less than 1/2 inch above the backarm seam to not less than 4 inches from the front shoulder seam. The armpit and back of the armhole shall be held short and pressed flat.				
	g. Press lapels. The lapels shall be soft creased from the breakline of the collar, and roll pressed from midway between the gorge seam to the bottom of the lapel.				
	h. Block armholes and shrink topsleeve with suitable pressing machine.				
25.	Finish pressing. a. Press yoke smooth and flat with a hand iron.				
	b. Touch up any area missed by hand or machine pressing.				
	c. Remove gloss, creases, and all pressing impressions.				
	d. Place overcoat on hanger until thoroughly dry.				
25.	Mark and sew buttons. a. Plastic anchor design buttons shall be sewn with the anchor in an upright position and aligned with the corresponding buttonholes. No bulging or distortion shall occur when fronts and necks are buttoned.				

Downloaded from http://www.everyspec.com

TABLE II - CONSTRUCTION OF OVERCOAT

No.	Operation	Stch Type	Seam/ Stch type	Stch in	Thre Ndl B L
	b. In addition to the number of stitches required for sewing on buttons, hand or machine sewn buttons on right front and the hidden button used to anchor right front to inside shall have the thread tightly wrapped not less than four times around to form a 1/8 to 3/16 inch shank. Thread ends on all buttons shall be hidden and securely tied off with not less than 2 stitches.				
	c. Fronts - six buttons, three on each front as follows:			Stchs per button	
	(1) Top button - through all plies. (Breast pocket shall not be caught in stitching).	Hand or		4 (dbl thread)	12/4 or 16/4
	(2) Center button - lower ply of pocketing and plies of inside breast pocket shall not be caught in button stitching.	101 or 301		22-24	20/4
				14-16	20/4
	(3) Bottom button - catch top ply of front pocketing, front, and interlining only.				
	Center of each button shall be sewn 6 (± 1/4) inches from the finished front edge.				
	NOTE: Pattern markings should be used as a guide only, pending amount of trimming performed in operation 14.				
	d. Sew one 50 line anchor button on right front lapel through facing and smoothly align with lapel buttonhole.		- as above -		
	e. Sew one hidden button on left front directly under the outside center button, catching the inner ply of the pocketing.		- as above -		

Downloaded from http://www.everyspec.com

3.8 Sizes and measurements. Finished measurements shall be as shown in Table II. All measurements and tolerances are expressed in inches.

Table II - Sizes and Measurements.

Size	(A) Chest	(B) Sleeve Inseam Length Short	Regular	Long	X-Long	(C) Center Back Length Short	Regular	Long	X-Long
30	42	17	18	19	20	29-1/4	30-3/4	32-3/4	34-3/4
32	44	17	18	19	20	29-3/4	31-1/4	33-1/4	35-1/4
34	46	17	18	19	20	30-1/4	31-3/4	33-3/4	35-3/4
36	48	17	18	19	20	30-3/4	32-1/4	34-1/4	36-1/4
38	50	17	18	19	20	31-1/4	32-3/4	34-3/4	36-3/4
40	52	17	18	19	20	31-3/4	33-1/4	35-1/4	37-1/4
42	54	17	18	19	20	32-1/4	33-3/4	35-3/4	37-3/4
44	56	17	18	19	20	32-3/4	34-1/4	36-1/4	38-1/4
46	58	17	18	19	20	32-3/4	34-1/4	36-1/4	38-1/4
48	60	17	18	19	20	33	34-1/2	36-1/2	38-1/2
50	62	17	18	19	20	33	34-1/2	36-1/2	38-1/2
52	64	17	18	19	20	33-1/4	34-3/4	36-3/4	38-3/4
Tolerance	±1/2	±1/2	±1/2	±1/2	±1/2	±3/8	±3/8	±3/8	±3/8

NOTE: Refer to figure 1 for A, B, and C measurements.

(A) Chest - Twice the measurement taken along the base of armhole from left front edge to center back seam with the overcoat laid out open and flat.

(B) Sleeve inseam length - Measurement shall be taken along sleeve inseam from base of armhole to bottom of sleeve.

(C) Center back length - Measurement shall be taken from the neckline seam to bottom edge of overcoat.

3.9 Workmanship. The finished overcoat shall conform to the quality of product established by this specification. As a final step in the contractor's production control plan, before formation of a lot, each overcoat shall be buttoned on a model form and examined for selected defects. An overcoat containing a selected defect shall not be included in the end item lot. Selected defects are those defects listed in Table III of MIL-STD-1391. The occurrence of defects shall not exceed the applicable point value or defect limit.

Downloaded from http://www.everyspec.com

4. QUALITY ASSURANCE PROVISIONS

4.1 Responsibility for inspection. Unless otherwise specified in the contract, the contractor is responsible for the performance of all inspection requirements as specified herein. Except as otherwise specified in the contract or order, the contractor may use his own or any other facilities suitable for performance of the inspection requirements specified herein, unless disapproved by the Government. The Government reserves the right to perform any of the inspections set forth in the specification where such inspections are deemed necessary to assure supplies and services conform to prescribed requirements.

4.1.1 Responsibility for compliance. All items must meet all requirements of sections 3 and 5. The inspection set forth in this specification shall become a part of the contractor's overall inspection system or quality program. The absence of any inspection requirements in the specification shall not relieve the contractor of the responsibility of assuring that all products or supplies submitted to the Government for acceptance comply with all requirements of the contract. Sampling in quality conformance does not authorize submission of known defective material, either indicated or actual, nor does it commit the Government to acceptance of defective material.

4.1.2 Certificate of compliance. Where certificates of compliance are submitted, the Government reserves the right to check test such items to determine the validity of the certification.

4.2 Classification of inspection. The inspection requirements specified herein are classified as follows:

1. First article inspection (see 4.3).
2. Quality conformance inspection (see 4.4).

4.3 First article inspection. When required, the first article submitted in accordance with 3.2 shall be inspected as specified for compliance with design, construction, workmanship, appearance, and dimensional requirements.

4.4 Quality conformance inspection. Inspection shall be performed in accordance with MIL-STD-1391.

4.4.1 Component and material inspection. In accordance with 4.1 above, components and materials shall be tested in accordance with all the requirements of referenced specifications, drawings, and standards unless otherwise excluded, amended, modified, or qualified in this specification or applicable procurement documents. In addition, a certificate of compliance shall be furnished for the resin treatment requirements of 3.3.10.2, the fusible tape requirements of 3.3.10.3. In addition, the alternate cotton flannel (3.3.4.2.1) and the cotton braid (3.3.12) shall be tested for the characteristics specified in Table III and in accordance with the referenced test methods of FED-STD-191 whenever applicable. The sample unit for the alternate cotton flannel shall be 2 yards, and the sample unit for the cotton braid shall be 1/2 yard.

Downloaded from http://www.everyspec.com

Table III Test Methods

Component	Characteristic	Requirement Paragraph	Test Method
Alternate Cotton Flannel	Weight	3.3.4.2.1	5041 1/
	Yarns per inch		
	Warp	3.3.4.2.1	5050 1/
	Filling	3.3.4.2.1	5050 1/
	Breaking Strength		
	Warp	3.3.4.2.1	5100 1/
	Filling	3.3.4.2.1	5100 1/
	Colorfastness to Crocking	3.3.4.2.1	AATCC 8-1977 1/
	Colorfastness to Wet-Dry Cleaning	3.3.4.2.1	5622
Cotton Braid	Colorfastness to Crocking	3.3.12	AATCC 8-1977 1/
	Colorfastness to Wet-Dry Cleaning	3.3.1.2	5622

1/ A certificate of compliance may be substituted and will be acceptable for the stated requirements.

4.4.2 Examination of the end item. Sampling and examination of the end item shall be performed in accordance with the provisions of MIL-STD-1391 and the following defects:

1. Top stitching along welt crooked, not parallel to pocket or misplaced - 1 point
2. One or both sleeve seams not pressed open - 2 points
3. Tacking of sleeve lining seams to sleeve seams omitted or insecure - 1 point
4. Undercollar lower raw edge stitching not uniform for more than 3/4 inch - 1 point
5. Repair of undercollar lower raw edge stitching not accomplished neatly - 2 points
6. Bottom edge of undercollar exposed beyond collar edge - 2 points

4.4.3 Packaging inspection. Packaging inspection shall be in accordance with MIL-STD-1391 or MIL-C-44192 as applicable.

Downloaded from http://www.everyspec.com

* 4.4.4 Palletization examination. An examination shall be made to determine that the palletization complies with the section 5 requirements. Defects shall be scored in accordance with the list below. The sample unit shall be one palletized unit load fully packaged. The lot size shall be the number of palletized unit loads in the end item inspection lot. The inspection level shall be S-1 and the AQL, expressed in terms of defects per hundred units, shall be 6.5.

Examine	Defect
Finished dimensions	Length, width, or height exceeds specified maximum requirements.
Palletization	Pallet pattern not as specified. Interlocking of loads not as specified. Load not bonded with required straps as specified.
Weight	Exceeds maximum load limits.
Marking	Omitted; incorrect; illegible; of improper size, location, sequence, or method of application.

5. PACKAGING

5.1 Preservation-packaging. Preservation-packaging shall be level A or C (see 6.2).

5.1.1 Level A. Each overcoat shall be unbuttoned and folded as follows:

(1) Keeping the lining exposed and collar extended, insert on shoulder into opposite shoulder area (base fabric face to face).
(2) Shape and smooth shoulder area and align front edges with center back seam.
(3) Fold overcoat in half lengthwise to measure approximately 14 inches by 23 inches. Each overcoat shall be inserted in a snug-fitting clear polyethylene film bag of not less than 0.00125 inch thickness (± 20% tolerance). All seams and closures shall be formed by heat sealing. A 1/4 inch hole shall be made at one corner of the bag to allow excess air to escape. As an alternate, the polyethylene bag may be of the tuck-in or reverse flap type where a heat seal closure and corner hole are not required.

5.1.2 Level C. Overcoats shall be packaged to afford adequate protection against deterioration and physical damage during shipment from the supply source to the first receiving activity. The package and the quantity per package shall be the same as that normally used by the contractor for retail distribution.

5.2 Packing. Packing shall be level A, B, or C as specified (see 6.2).

Downloaded from http://www.everyspec.com

5.2.1 Level A. Seven overcoats, of one size and length, packaged as specified in 5.1, shall be packed in a fiberboard shipping container assembled, closed, and reinforced conforming to type CF, class weather-resistant, grade V15C, variety DW, size 3A of MIL-B-17757. The fiberboard for the liner shall conform to type CF, class domestic of MIL-B-17757. Level A packages shall be packed flat, seven in depth within the container with every other one reversed and the length of the bags parallel to the side panels of the container. Each container shall have the contents completely covered on the top and bottom with a sheet of commercial grade kraft paper.

5.2.2 Level B. Seven overcoats, of one size and length, packaged as specified in 5.1., shall be packed in a fiberboard shipping container assembled, closed, and reinforced conforming to type CF, class domestic, grade 275, variety DW, size 3A of MIL-B-17757. The fiberboard for the liner shall conform to type CF, class domestic of MIL-B-17757. Level A packages shall be packed flat, seven in depth within the container with every other one reversed, and the length of the bags parallel to the side panels of the container. Each container shall have the contents completely covered on the top and bottom with a sheet of commercial grade kraft paper.

5.2.3 Level C. Overcoats, packaged as specified in 5.1, shall be packed in a manner to insure carrier acceptance and safe delivery at destination at the lowest transportation rate for such supplies. The quantity per shipping container shall be the same as that normally used by the contractor for retail distribution. Containers shall comply with the U.S. Postal Service Manual, Uniform Freight Classification Rules, or National Motor Freight Classification Rules, as applicable.

5.2.4 Hangar pack. When specified (see 6.2) the coats shall be packaged, packed, palletized and marked in accordance with appendix to MIL-C-44192 in type I containers except the quantity shall be six coats.

5.3 Marking. In addition to any special marking required by the contract or order, shipping containers shall be marked in accordance with MIL-STD-129.

5.3.1 Polyethylene bagged packages. The polyethylene bagged packages, specified in 5.1.1, shall have the required information legibly printed or stamped in black bold letters, 1/4 inch in height, directly on the bag across the center face or on a white paper label inserted within the bag to permit ready identifiction. The bag or label shall indicate the following information:

STOCK NUMBER
NOMENCLATURE
SIZE AND LENGTH

Downloaded from http://www.everyspec.com

5.4 Palletization. When specified (see 6.2) overcoats, packed as specified in 5.2, shall be palletized on a 4-way entry pallet in accordance with load type Ia of MIL-STD-147. Each prepared load shall be bonded with primary and secondary straps in accordance with the bonding means C, K and L or P. Pallet pattern shall be in accordance with the appendix of MIL-STD-147. The pallet shall be 4-way, Type IV; Type V, class 1, size 2; or Type VIII fabricated from wood group I, II, III or IV, Grade A of NN-P-71, or 4-Way, Style 1, Size A, Type I, Class 1, fabricated from wood groups specified, of MIL-P-15011. Interlocking of loads shall be effected by reversing the pattern of each course. If the container is of size which does not conform to any of the patterns specified in MIL-STD-147, the pallet pattern used shall first be approved by the contracting officer.

6. NOTES

6.1 Intended use. The overcoat (Pea Coat) is intended for use by the Navy enlisted male personnel.

6.2 Ordering data. Procurement documents should specify the following:

a. Title, number, and date of this specification.
b. Sizes and lengths required (see 1.2).
c. When first article inspection is required (see 3.2). (When required, the item tested should be a first article sample. The contracting officer should include specific instructions in acquisition documents regarding arrangements for examinations, quantity, and approval of the first article.)
d. Levels of packaging and packing required (see 5.1 and 5.2).
e. When palletization is required (see 5.4).

6.3 Samples and patterns. For access to samples and patterns, address the procuring activity issuing the invitation for bids.

6.4 Subject term (key word) listing:
Wool, melton
Peacoat
Overcoat, double breasted
Coat, enlisted

Custodian:
Navy - NU

Review Activity:
DLA - CT

Preparing Activity:
Navy - NU

Project No. 8405-N057

Downloaded from http://www.everyspec.com

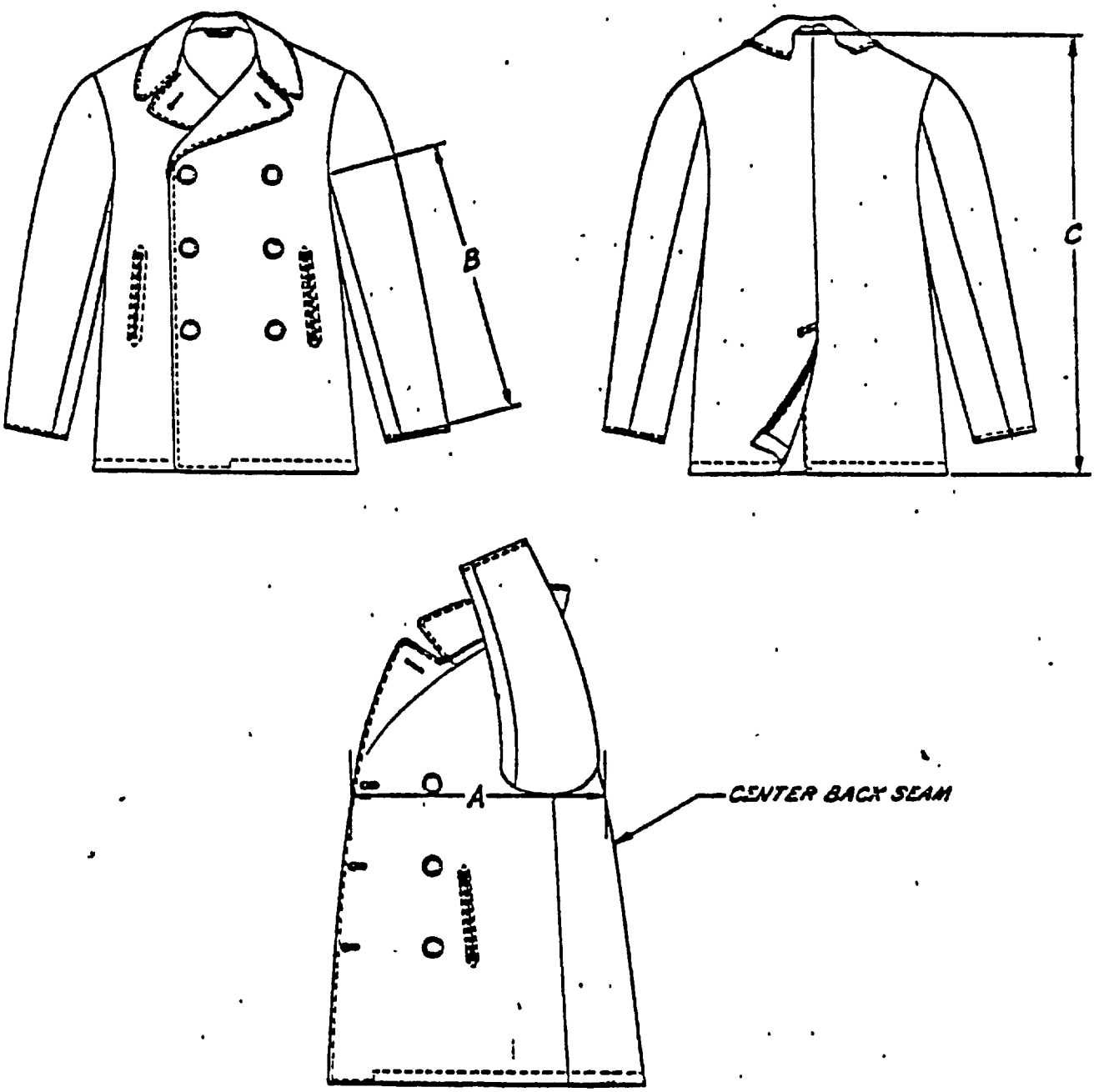

FIGURE 1

OVERCOAT, MAN'S ENLISTED

Downloaded from http://www.everyspec.com

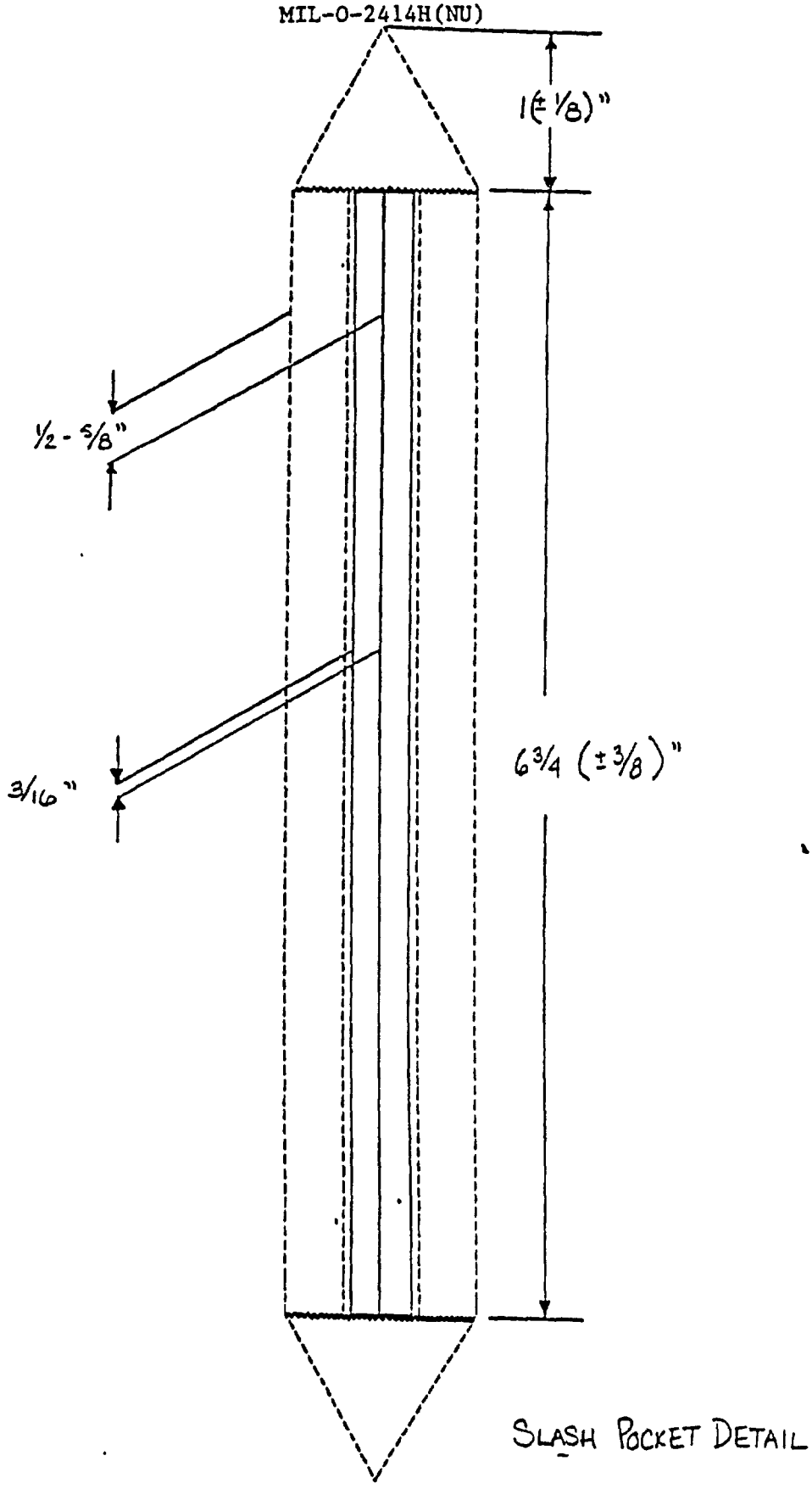

FIGURE 2

OVERCOAT, MAN'S ENLISTED

Downloaded from http://www.everyspec.com

STANDARDIZATION DOCUMENT IMPROVEMENT PROPOSAL

(See Instructions – Reverse Side)

1. DOCUMENT NUMBER	2. DOCUMENT TITLE
MIL-O-2414H(NU)	OVERCOAT, MAN'S ENLISTED

3a. NAME OF SUBMITTING ORGANIZATION	4. TYPE OF ORGANIZATION *(Mark one)*
	☐ VENDOR
	☐ USER
b. ADDRESS *(Street, City, State, ZIP Code)*	☐ MANUFACTURER
	☐ OTHER *(Specify)*: _____

5. PROBLEM AREAS

a. Paragraph Number and Wording.

b. Recommended Wording:

c. Reason/Rationale for Recommendation:

6. REMARKS

7a. NAME OF SUBMITTER *(Last, First, MI)* – Optional	b. WORK TELEPHONE NUMBER *(Include Area Code)* – Optional
c. MAILING ADDRESS *(Street, City, State, ZIP Code)* – Optional	8. DATE OF SUBMISSION *(YYMMDD)*

Downloaded from http://www.everyspec.com

INSTRUCTIONS: In a continuing effort to make our standardization documents better, the DoD provides this form for use in submitting comments and suggestions for improvements. All users of military standardization documents are invited to provide suggestions. This form may be detached, folded along the lines indicated, taped along the loose edge *(DO NOT STAPLE)*, and mailed. In block 5, be as specific as possible about particular problem areas such as wording which required interpretation, or too rigid, restrictive, loose, ambiguous, or was incompatible, and give proposed wording changes which would alleviate the problems. Enter in block 6 any remarks not related to a specific paragraph of the document If block 7 is filled out, an acknowledgement will be mailed to you within 30 days to let you know that your comments were received and are being considered.

NOTE. This form may not be used to request copies of documents, nor to request waivers, deviations, or clarification of specification requirements on current contracts. Comments submitted on this form do not constitute or imply authorization to waive any portion of the referenced document*(s)* or to amend contractual requirements.

(Fold along this line)

(Fold along this line)

DEPARTMENT OF THE NAVY

NO POSTAGE NECESSARY IF MAILED IN THE UNITED STATES

OFFICIAL BUSINESS
PENALTY FOR PRIVATE USE $300

BUSINESS REPLY MAIL
FIRST CLASS PERMIT NO 12503 WASHINGTON D C

POSTAGE WILL BE PAID BY THE DEPARTMENT OF THE NAVY

NCTRF (Code 50)
21 Strathmore Road
Natick, Ma. 01760-2490