Downloaded from http://www.everyspec.com

MILITARY SPECIFICATION

NUT, SEALING, SELF-LOCKING, 250°F, 450°F
GENERAL SPECIFICATION FOR

This specification is approved for use by all Departments and Agencies of the Department of Defense.

1. SCOPE

1.1 Scope. This specification establishes the requirements for the manufacture and acceptance of self-locking nuts for sealing fluids in temperatures up to 250°F and 450°F.

2. APPLICABLE DOCUMENTS

2.1 Government documents.

2.1.1 Specifications and standards. The following specifications and standards form a part of this specification to the extent specified herein. Unless otherwise specified, the issues of these documents shall be those listed in the issue of the Department of Defense Index of Specifications and Standards (DODISS) and supplement thereto, cited in the solicitation.

SPECIFICATIONS

FEDERAL

QQ-P-416	Plating, Cadmium (Electrodeposited)
TT-E-751	Ethyl Acetate, Technical
TT-I-735	Isopropyl Alcohol
TT-M-261	Methyl Ethyl Ketone, Technical
TT-N-97	Naphtha Aromatic

Beneficial comments (recommendations, additions, deletions) and any pertinent data which may be of use in improving this document should be addressed to: Commanding Officer, Naval Air Engineering Center, Systems Engineering and Standardization Department, Code 93, Lakehurst, NJ 08733, by using the self-addressed Standardization Document Improvement Proposal (DD Form 1426) appearing at the end of this document or by letter.

AMSC N/A FSC 5310
DISTRIBUTION STATEMENT A: Approved for public release; distribution is unlimited.

Downloaded from http://www.everyspec.com

SPECIFICATIONS (Continued)

FEDERAL (Continued)

GGG-W-641	Wrench, Socket (and Sockets, Handles, and Attachments for Socket Wrenches, Hand)
PPP-H-1581	Hardware (Fasteners and Related Items) Packaging and Packing for Shipment and Storage of

MILITARY

MIL-C-5541	Chemical Conversion Coatings on Aluminum and Aluminum Alloys
MIL-T-5624	Turbine Fuel, Aviation, Grades JP-4 and JP-5
MIL-H-6088	Heat Treatment of Aluminum Alloys
MIL-B-6812	Bolt, Aircraft
MIL-I-6866	Inspection, Penetrant Method of
MIL-I-6868	Inspection Process, Magnetic Particle
MIL-H-6875	Heat Treatment of Steels (Aircraft Practice), Process for
MIL-L-7808	Lubricating Oil, Aircraft Turbine Engine, Synthetic Base
MIL-A-8243	Anti-Icing and Deicing-Defrosting Fluid
MIL-A-8625	Anodic Coatings, for Aluminum and Aluminum Alloys
MIL-S-8802	Sealing Compound, Temperature-Resistant, Integral Fuel Tanks and Fuel Cell Cavities, High-Adhesion
MIL-S-8879	Screw Threads, Controlled Radius Root With Increased Minor Diameter, General Specification for
MIL-L-8937	Lubricant, Solid Film, Heat Cured
MIL-P-23377	Primer Coating, Epoxy Polyamide, Chemical and Solvent Resistant
MIL-C-43616	Cleaning Compound, Aircraft Surface
MIL-H-81200	Heat Treatment of Titanium and Titanium Alloys

Downloaded from http://www.everyspec.com

SPECIFICATIONS (Continued)

MILITARY (Continued)

MIL-S-81733	Sealing and Coating Compound, Corrosion Inhibitive
MIL-R-83283	Rubber, Silicone, High Strength, Cabin Pressure Seal Material, Diaphragm Type

(See Supplement 1 for list of associated specifications.)

STANDARDS

MILITARY

MIL-STD-105	Sampling Procedures and Tables for Inspection by Attributes
MIL-STD-129	Marking for Shipment and Storage
MIL-STD-1312	Fastener Test Methods

(Copies of specifications and standards required by contractors in connection with specific acquisition functions should be obtained from the contracting activity or as directed by the contracting activity.)

2.2 Other publications. The following documents form a part of this specification to the extent specified herein. Unless otherwise specified, the issues of the documents which are DOD adopted shall be those listed in the issue of the DODISS specified in the solicitation. Unless otherwise specified, the issues of documents not listed in the DODISS shall be the issue of the nongovernment documents which is current on the date of the solicitation.

American National Standards Institute

ANSI - B46.1	Surface Texture (Surface Roughness, Waviness and Lay)

(Application for copies should be addressed to the American National Standards Institute, 1430 Broadway, New York, NY 10018.)

National Aerospace Standards

NAS 1801	Screw, Hex Head, Phillips Recess, Full Thread, Alloy Steel 160,000 psi Tensile
NAS 3350	Nuts, Self-Locking, 450°F, High Quality

(Application for copies should be addressed to the National Standards Association, Inc., 1725 De Sales Street, N.W., Washington, DC 20036.)

Downloaded from http://www.everyspec.com

2.3 Order of precedence. In the event of a conflict between the text of this specification and the references cited herein (except for associated detail specifications, specification sheets or MS standards), the text of this specification shall take precedence. Nothing in this specification, however, shall supersede applicable laws and regulations unless a specific exemption has been obtained.

3. REQUIREMENTS

3.1 Specification sheets. The individual item requirements shall be as specified herein and in accordance with the applicable specification sheet. In the event of any conflict between the requirements of this specification and the specification sheet, the latter shall govern.

3.2 Qualification. The nuts furnished under this specification shall be products which are authorized by the qualifying activity for listing on the applicable qualified products list at the time set for opening of bids (see 4.3 and 6.3).

3.2.1 Requalification. Requalification will be required in the event any change is made in the product design, material, heat treatment, finish or lubrication.

3.3 Material. The material shall be as specified on the applicable specification sheet.

3.3.1 Heat treatment. Heat treatment of aluminum alloy nuts shall be in accordance with MIL-H-6088; steel nuts in accordance with MIL-H-6875; and titanium nuts in accordance with MIL-H-81200.

3.4 Design and construction.

3.4.1 Design. The nuts shall be of the prevailing torque type. The locking device shall not operate by means of separate movement as a result of installation and shall not depend upon pressure on the bearing surface for locking action.

3.4.2 Construction.

3.4.2.1 Wrenching element. The wrenching element shall be in accordance with the applicable specification sheet.

3.4.2.2 Threads. Thread dimensions shall be in accordance with MIL-S-8879. Threads used on the locking device may be displaced in any manner that provides self-locking nuts conforming to this specification. Thread gaging shall be performed after plating in accordance with the applicable thread specification (except that the unlubricated nut with locking device incorporated shall allow the go plug gage members to enter not less than a one-half turn before engagement of the locking device). When lubricant prevents use of standard gages, the nut shall permit free rotational (finger torqued) bolt engagement of not less than three-fourths turn.

Downloaded from http://www.everyspec.com

3.4.2.3 Seal. Nuts shall have a sealing element integral to the nut body design.

3.5 Protective treatment. Protective treatment shall be as specified on the applicable specification sheet.

3.6 Lubrication. Nuts may be lubricated to prevent nut-bolt seizure, provided the lubricant has passed the applicable tests (see 4.5.2). The Qualified Products List (QPL-85615) shall identify the lubricant and shall classify it as either dry film or soluble film. The lubricant shall not be changed without requalification of the nut, except as noted in 3.6.1.

3.6.1 Dry film lubricant. When specified on the applicable specification sheet, the 250°F and 450°F nuts shall be coated with graphite-free dry film lubricant. If lubricant is selected from QPL-8937, no testing of lubricant is required; if lubricant is not selected from QPL-8937, then lubricant shall be subjected to and pass the applicable tests (see 4.5.2 through 4.5.2.5).

3.6.2 Soluble film lubricant. When specified on the applicable specification sheet, the nuts shall be coated with a lubricant that is removable (see 4.5.3).

3.7 Axial tensile strength. The nuts shall have an axial tensile strength of not less than the values specified on the applicable specification sheet (see 4.5.4.2).

3.8 Torque.

3.8.1 Wrench torque. Wrenchable nuts shall withstand the wrench torque values specified in Table I (see 4.5.4.3.1). Upon completion of the test, the nuts shall show no indication of permanent deformation that may prevent its proper application and removal with a box or socket wrench. The nuts shall show no evidence of cracking (see 4.5.4.7).

3.8.2 Torque effectivity (room temperature). The nuts shall not exceed room temperature maximum locking torque values and shall not be lower than the minimum breakaway torque values specified in Table II (see 4.5.4.3.2).

3.8.3 Torque effectivity (after elevated temperature). The nuts shall not exceed the maximum locking torque values and shall not be lower than the minimum breakaway torque values specified in Table II (see 4.5.4.3.3 and 4.5.4.3.3.1).

3.8.4 Permanent set. The nuts shall not exceed the maximum locking torque and shall not be lower than the minimum breakaway torque values specified in Table II (see 4.5.4.3.4).

3.8.5 Torque out (A.R.E. nuts or plate nuts). Torque out values for A.R.E. (Attached Retention Element) nuts or plate nuts with no axial load on the seat of the nut shall be not less than the values listed in Table II (see 4.5.4.3.5). This test is not applicable to wrenchable nuts.

Downloaded from http://www.everyspec.com

TABLE I. Wrench torque values.

Nominal Size	Wrench Torque Minimum (in. pounds)		
	Aluminum Alloy Nuts	Steel Nuts 1/	Titanium and CRES Nuts 2/
0.164-32	25	30	27
0.190-32	45	60	50
0.250-28	115	150	125
0.312-24	130	330	280
0.375-24	220	530	430
0.437-20	480	825	650
0.500-20	630	1125	900

1/ Wrench torque values are in accordance with NAS 3350 (160 ksi).
2/ Wrench torque values are in accordance with NAS 3350 (125 ksi).

TABLE II. Torque values. 1/

Maximum Locking Torque					
Nominal Size	Room Temperature (in.-lb)	Room Temperature After Bake (in.-lb)	Minimum Breakaway Torque (in.-lb)	Torque Out (in.-lb)	Push Out (pounds)
0.164-32	15	30	1.5	45	80
0.190-32	18	36	2.0	60	100
0.250-28	30	60	3.5	100	125
0.312-24	60	120	6.5	160	125
0.375-24	80	160	9.5	240	125
0.437-20	100	200	14.0	350	125
0.500-20	150	300	18.0	400	125

1/ Values apply to nuts as lubricated by manufacturer.

Downloaded from http://www.everyspec.com

3.8.6 Push out (A.R.E. nuts or plate nuts). Push out values for A.R.E. nuts or plate nuts shall be not less than the values listed in Table II (see 4.5.4.3.6).

3.9 Vibration. The nuts shall show no evidence of failure when subjected to the vibration test (see 4.5.4.4).

3.10 Stress durability (Alloy steel nuts). Alloy steel nuts shall show no evidence of failure when subjected to the stress durability test (see 4.5.4.6).

3.11 Discontinuities. Discontinuities in the nuts shall be not greater than the depth limitations specified in Table III (see 4.5.4.7). Care shall be taken not to confuse cracks with discontinuities (see 6.4.1). Cracks are not permitted in any location.

TABLE III. Maximum discontinuity depth limits. 1/

Nominal Thread Size	Limit (inches)		Rejectable Criteria
	Sheet	Bar/Wire	
0.164-32	0.005	0.010	
0.190-32	.005	.010	Any crack, regardless
0.250-28	.005	.010	of location.
0.312-24	.005	.010	Discontinuities in
0.375-24	.006	.011	excess of specified
0.437-20	.007	.012	limits.
0.500-20	.009	.014	

1/ Samples of nuts having indications may be sectioned and microexamined to determine whether the indications are due to tool or die marks, or discontinuities, and to determine conformance of discontinuities to the depth limits specified.

3.12 Sealing effectivity. The nuts shall seal when subjected to the sealing effectivity test (see 4.5.4.8 and 4.5.4.8.1). The nuts shall be suitable for use with the fluids listed in 4.5.4.8.

3.13 Workmanship. Workmanship shall be consistent with the type of product, finish and class of thread fit specified. Sharp edges shall be broken and hanging burrs and slivers shall be removed.

Downloaded from http://www.everyspec.com

4. QUALITY ASSURANCE PROVISIONS

4.1 Responsibility for inspection. Unless otherwise specified in the contract or purchase order, the contractor is responsible for the performance of all inspection requirements as specified herein. Except as otherwise specified in the contract or purchase order, the contractor may use his own or any other facilities suitable for the performance of the inspection requirements specified herein, unless disapproved by the Government. The Government reserves the right to perform any of the inspections set forth in the specification where such inspections are deemed necessary to assure supplies and services conform to prescribed requirements.

4.1.1 Responsibility for compliance. All items must meet all requirements of Sections 3 and 5. The inspection set forth in this specification shall become a part of the contractor's overall inspection system or quality program. The absence of any inspection requirements in the specification shall not relieve the contractor of the responsibility of assuring that all products or supplies submitted to the Government for acceptance comply with all requirements of the contract. Sampling in quality conformance does not authorize submission of known defective material, either indicated or actual, nor does it commit the Government to acceptance of defective material.

4.2 Classification of inspections. The inspection requirements specified herein are classified as follows:

a. Qualification inspection (see 4.3).

b. Quality conformance inspection (see 4.4).

4.3 Qualification inspection. Qualification inspection shall consist of the inspections listed in Table IV.

4.3.1 Retention of qualification. To maintain status on a Qualified Products List (QPL), certification shall be submitted by the manufacturer at two year intervals to indicate continued compliance with the requirements of this specification. Certification shall be requested from the manufacturer by the Naval Air Engineering Center (NAEC), Systems Engineering and Standardization Department (SESD), Code 9311, Lakehurst, NJ 08733-5100, who is acting under the direction of the Naval Air Systems Command. Certification shall be signed by a responsible official of management. The certification shall attest that the listed product(s) is still available from the listed plant, can be produced under the same conditions as originally qualified (i.e., same process, materials, construction, design, manufacturer's part number or designation), and meets the requirements of the current issue of the specification. Failure of the manufacturer to provide the certification will be cause for removal from the QPL. Upon completion of the certification review by NAEC, the QPL will be reprinted to show the date of certification. DD Form 1717 (Certification of Qualified Products), shall be used by the manufacturer for obtaining certification.

4.3.2 Certified test report. The manufacturer shall furnish a certified test report showing that the manufacturer's product satisfactorily conforms to

Downloaded from http://www.everyspec.com

this specification. The test report shall include actual results of the tests specified herein. When this report is submitted, it shall be accompanied by a dated drawing which describes the manufacturer's product by specifying all dimensions and tolerances, composition of materials selected, coating or plating applied, and the Rockwell hardness. The manufacturer's part number for each size shall be included on the specified drawing.

TABLE IV. Qualification inspections.

Test	Requirement Paragraph	Test Paragraph	Nuts Required	Bolts or Studs Required
Examination of Product	3.4	4.5.1	ALL	0
Suitability of Lubricants	3.6	4.5.2 - 4.5.2.5		
Axial Tensile Strength	3.7	4.5.4.2	5	5
Wrench Torque	3.8.1	4.5.4.3.1	5	5
Torque Effectivity, room temperature (locking element)	3.8.2	4.5.4.3.2	5	5
Torque Effectivity, 250°F and 450°F (locking element)	3.8.3	4.5.4.3.3	5	5
Permanent Set	3.8.4	4.5.4.3.4	3	3
Torque out (A.R.E. nuts only)	3.8.5	4.5.4.3.5	5	5
Push out (A.R.E. nuts only)	3.8.6	4.5.4.3.6	5	5
Vibration	3.9	4.5.4.4	10	10
Stress Durability	3.10	4.5.4.6	5 1/	5
Discontinuities	3.11	4.5.4.7	ALL	0
Sealing Effectivity	3.12	4.5.4.8	40 2/	8

1/ Stress Durability for Aluminum nuts is not required.
2/ Vibration after baking for Aluminum nuts is not required.

Downloaded from http://www.everyspec.com

4.3.3 Sampling plan. The qualification inspection samples shall consist of 75 nuts for each size upon which qualification is desired. All bolts, screws and mandrels necessary for inspections shall be furnished by the manufacturer. Complete data on the lubricating material used on the nuts shall be furnished. Samples shall be identified as required and forwarded to the activity responsible for qualification, designated in the letter of authorization from that activity (see 6.3).

4.4 Quality conformance inspections. The quality conformance inspections shall be as specified in Table V.

TABLE V. Quality conformance inspections.

Inspection	Requirement Paragraph	Inspection Paragraph
Examination of Product	3.4	4.5.1
presence of locking element	3.4.1	4.5.1
presence of seal	3.4.2.3	4.5.1
thread fit	3.4.1	4.5.1
Axial Strength	3.7	4.5.4.2
Torque Effectivity, room temperature (locking element)	3.8.2	4.5.4.3.2
Stress Durability	3.10	4.5.4.6
Sealing Effectivity	3.12	4.5.4.8
Packaging	5.1	4.6

4.4.1 Selection of samples. Sample nuts shall be selected at random from each lot as specified herein. A lot shall consist of finished nuts of the same type and diameter fabricated by the same process, heat treated in the same manner, and produced as one continuous run or part thereof.

4.4.1.1 Sampling plan A. Sampling sizes for examination of product (see 4.5.1) shall be in accordance with MIL-STD-105, inspection level I. The acceptance and rejection criteria shall be applied to the following Acceptance Quality Levels (AQLs) pertaining to the corresponding class:

Major AA - 0.0 percent
Major A - 0.4 percent
Major B - 1.5 percent
Major C - 2.5 percent
Major D - 4.0 percent

Source: https://assist.dla.mil -- Downloaded: 2014-09-26T12:56Z

Downloaded from http://www.everyspec.com

4.4.1.1.1 Classification of defects. The classification of defects for sealing self-locking nuts shall be as follows:

Major AA: Absence of sealing element.

Major A: Visual presence of locking configuration.

Major B: Thread fit. Surface plating.

Major C: Wrench size; Height of wrenchable portion. Overall height; Diameter of bearing surface.
Loose or hanging burrs - Concentricity of threads to base diameter.
All dimensional characteristics not covered above.

Major D: Part identification in accordance with the applicable specification sheet or drawing.

4.4.1.2 Sampling plan B. For the axial strength test (4.5.4.2) and locking torque test (4.5.4.3), samples shall be selected in accordance with Table VI.

TABLE VI. Sampling plan B.

Lot Size	Sample Size	Acceptance Number
Under 10,000	5	0
10,000 to 50,000	10	0
50,000 to 100,000	15	0
Over 100,000	27	1

4.4.1.3 Sampling plan C. For the stress durability test (4.5.4.6), sample size shall be five for each lot and the acceptance number zero.

4.5 Methods of inspection.

4.5.1 Examination of product. The nuts shall be examined for conformance to this specification and the applicable specification sheets with respect to material, workmanship, dimensions, design, construction and finish.

4.5.2 Lubricant coatings.

4.5.2.1 Effect of coating on the ability of cadmium plating to prevent galvanic corrosion. Four panels made of the same material as the finished fastener shall be cadmium plated in accordance with QQ-P-416, Type II, Class 2. Two of the panels shall be overcoated with the candidate lubricant and two with any product listed in QPL 8937. The panels shall then be scribed with an "X" extending to 1/4-inch from each corner, and subjected to a 96-hour salt spray test in accordance with MIL-STD-1312-1. After exposure, no significant difference in corrosion shall be found when a comparison is made between the panels with the candidate lubricant and those coated with a dry film lubricant in accordance with MIL-L-8937.

Downloaded from http://www.everyspec.com

4.5.2.2 Effect of the coating on structural materials in contact with the fastener. Corrosion test specimens shall be panels with four test fasteners per panel. The four fasteners shall be cadmium plated in accordance with QQ-P-416, Type II, Class 2. Two fasteners shall be overcoated with the candidate lubricant and two with any dry film lubricant listed in QPL 8937. Duplicate specimen sets of the following alloys and finishes shall be subjected to a 96-hour salt spray test in accordance with MIL-STD-1312-1.

a. Bare 7075-T6 aluminum alloy and bare 2024-T6 aluminum alloy treated in accordance with MIL-C-5541, Class 1A.

b. Bare 7075-T6 aluminum alloy and bare 2024-T6 aluminum alloy anodized in accordance with MIL-A-8625, Type II, Class 1.

c. Clad 7075-T6 aluminum alloy and clad 2024-T6 aluminum alloy treated in accordance with MIL-C-5541.

d. Untreated titanium alloy.

e. Untreated 300 series stainless steel.

After exposure, the specimens shall be disassembled and no significant difference in corrosion shall be found on either the fasteners or panel faying surface when a comparison is made between the fasteners coated with the candidate lubricant and fasteners coated with a dry film lubricant in accordance with MIL-L-8937.

4.5.2.3 Behavior of coating with paint. Corrosion test specimens shall be of the same aluminum alloys and treatments as specified in 4.5.2.2b and c, and painted with two coats of primer in accordance with MIL-P-23377.

4.5.2.3.1 Painted nut corrosion. The specimens shall be subjected to a 96-hour salt spray test in accordance with MIL-STD-1312-1. After exposure, there shall be no significant difference in corrosion, blistering, or loss of adhesion of the paint when a comparison is made between the fasteners coated with the candidate lubricant and fasteners coated with a dry film lubricant in accordance with MIL-L-8937.

4.5.2.4 Effect of coating on sealing materials. Corrosion test specimens shall be of the same aluminum alloys and treatments as specified in 4.5.2.2b and c, except that sealant materials in accordance with MIL-S-8802 and MIL-S-81733 shall be applied to the fasteners. A specimen panel shall be prepared for each sealant material. Before the applicant of the sealant material, the fasteners and panels shall be cleaned by scrubbing and rinsing with solvent formulated in accordance with Table VII. After rinsing, and while still wet, the specimens shall be wiped dry with a clean, nonoily wiping cloth.

4.5.2.4.1 Coated nut corrosion. The specimens shall be subjected to a 96-hour salt spray test in accordance with MIL-STD-1312-1. After exposure, there shall be no significant difference in loss of adhesion or degradation of sealant material when a comparison is made between the fasteners coated with the candidate lubricant and fasteners coated with dry film lubricant in accordance with MIL-L-8937.

Downloaded from http://www.everyspec.com

4.5.2.5 Effect of coating on stress corrosion resistance of fasteners. The lubricated threaded fastener shall be scratched through to the base metal. Torque shall be applied against the aluminum alloy panels to induce 90,000 pounds per square inch in mating bolt. The assembly shall be salt spray tested in accordance with MIL-STD-1312-1. After exposure, the lubricated fastener shall not have any cracks that can be determined by visual inspection under 10X magnification.

TABLE VII. Formulation of cleaner.

Ingredient	Specification	Percent by Volume
Aromatic petroleum naphtha	TT-N-97, type I, grade B	50
Ethyl acetate	TT-E-751	20
Methyl-ethyl-ketone	TT-M-261	20
Isopropyl alcohol	TT-I-735	10

4.5.3 Soluble film lubricant removal. A soluble film lubricated panel made of the same material and finish as the nut shall be submerged for 10 ±1 minutes in cleaner as specified in Table VII, then removed and wiped dry with a clean, non-oily cloth. Failure of the lubricant to be completely removed from the panel shall be cause for rejection.

4.5.4 Mechanical properties.

4.5.4.1 Bolts or studs. Bolts or studs with rolled threads in accordance with MIL-S-8879 having a strength level of not less than 160 ksi shall be used for the axial strength test, stress durability test and torque test. If bolts are used, head configuration is optional.

4.5.4.2 Axial tensile strength. The nuts shall be assembled on test bolts as specified in 4.5.4.1. The axial tensile strength test shall be conducted in accordance with MIL-STD-1312-8. The nuts shall support the axial tensile load without rupture.

4.5.4.3 Torque.

4.5.4.3.1 Wrench torque. Only wrenchable nuts shall be installed on test bolts or studs as specified in 4.5.4.1 with a steel test fixture in accordance with MIL-STD-1312-14, Figure 2. The nuts shall be torqued to the wrench torque values specified in Table I. Wrenches shall be of the socket type in accordance with GGG-W-641. Deformation of the wrenching element that interferes with the application and removal of the nut shall be cause for rejection. Cracking shall also be cause for rejection.

4.5.4.3.2 Torque effectivity (room temperature). The nuts shall be installed on test bolts or studs as specified in 4.5.4.1 with a steel test fixture in accordance with MIL-STD-1312-14, Figure 1. The nuts shall be

Downloaded from http://www.everyspec.com

torqued to the values specified in Table IX. The nuts shall then be removed and reinstalled and seated four additional times. The maximum locking torque and minimum breakaway torque shall be recorded for the first cycle and fifth cycle. The minimum breakaway torque shall be the torque required to start relative motion between the nut and bolt after the nut has been unseated and backed off one-half turn.

4.5.4.3.3 Torque effectivity (after 250°F bake). The aluminum nuts shall be installed on test bolts or studs as specified in 4.5.4.1 with test fixtures in accordance with MIL-STD-1312-13, Figure 1. The nuts shall be torqued to the values specified in Table IX. The assemblies shall then be baked for 3 hours at 250°F (-0° +25°F) and cooled to room temperature. The nuts shall then be removed and reinstalled and seated four additional times. The maximum locking torque and minimum breakaway torque shall be recorded for the first and fifth cycles. The minimum breakaway torque shall be the torque required to start relative motion between the nut and bolt after the nut has been unseated and backed off one-half turn.

4.5.4.3.3.1 Torque effectivity (after 450°F bake). The alloy steel, titanium, or CRES nuts shall be installed on test bolts or studs as specified in 4.5.4.1 with test fixtures in accordance with MIL-STD-1312-14, Figure 1. The nuts shall be torqued to the values specified in Table IX. The assemblies shall then be baked for six hours at 450°F (-0° +25°F) and cooled to room temperature. The nuts shall then be removed and reinstalled (seated and baked) four additional times. The maximum locking torque and minimum breakaway torque shall be recorded for the first and fifth cycles. The minimum breakaway torque shall be the torque required to start relative motion between the nut and bolt after the nut has been unseated and backed off one-half turn.

4.5.4.3.4 Locking element permanent set. Permanent set shall be evaluated by subjecting the nut, at room ambient temperature, to one complete installation and removal cycle on a bolt or screw, as applicable. The test cycle shall be repeated with the same clean nut on a minimum pitch mandrel in accordance with 4.5.4.3.4.1. Three of the nuts submitted shall be subjected to this test. The bolts or screws for this test shall conform to MIL-B-6812 for size 0.190-32 and above. For sizes under 0.190-32, the bolts and screws shall conform to NAS 1801. The pitch diameter of the bolt or screw shall be established at 75 percent, +0.0000 -0.0004, of the tolerance range of Class 3A above the minimum pitch diameter. The pitch diameter shall be checked with functional pitch diameter tri-roll gages.

4.5.4.3.4.1 Mandrel for permanent set test. The mandrel shall conform to Figure 1. Threads shall conform to Table VIII. The mandrel shall be checked with pitch diameter tri-roll gages.

4.5.4.3.5 Torque out (A.R.E. nuts or plate nuts only). A.R.E. nuts or plate nuts shall meet the torque out values listed in Table III when tested with no axial load on the seat of the nut. The nuts or nut assembly shall conform to the values without cracking the retainer or without becoming malformed sufficiently to preclude the application of the same torque in the opposite direction. The nuts shall be installed into a 2024-T3 aluminum alloy panel. The panel thickness shall be as specified on the applicable military standard or specification sheet for the designated fastener grip.

Downloaded from http://www.everyspec.com

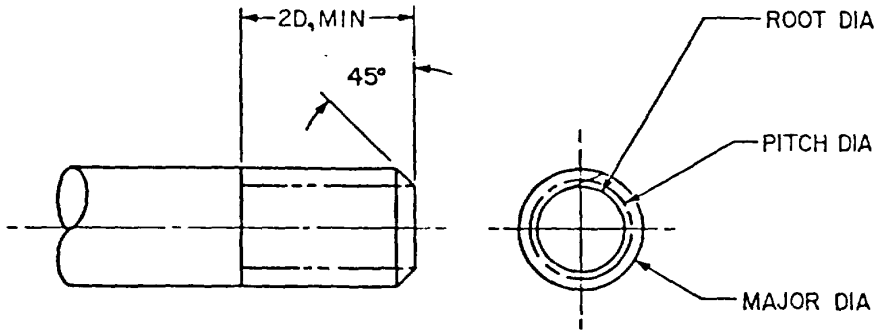

FIRST THREAD

NOTES:

1. MATERIAL: STEEL

2. HARDNESS: HEAT TREATED TO ROCKWELL HRC 60-64.

3. THREADS: THE THREAD FORM SHALL CONFORM TO THAT SPECIFIED IN MIL-S-8879. THE THREADS SHALL BE RIGHT HAND. THE THREAD DIMENSIONS SHALL BE AS SPECIFIED IN TABLE VIII.

4. SURFACE ROUGHNESS: 20 MICROINCHES MAXIMUM IN ACCORDANCE WITH ANSI B46.1.

5. THE MANDREL END SHALL HAVE A 45-DEGREE CHAMFER EXTENDING BELOW THE ROOT DIAMETER. THE RESULTING SHARP FEATHER EDGE OF THE INCOMPLETE THREAD SHALL BE REMOVED BY STONING.

6. LUBRICANT SHALL BE USED ONLY WHEN THE MANDREL IS USED WITH CORROSION-RESISTING STEEL NUTS.

FIGURE 1. Mandrel.

Downloaded from http://www.everyspec.com

TABLE VIII. Thread dimensions for maximum stud and minimum mandrel for permanent set test.

Maximum 3A Stud			Minimum 3A Mandrel			
Size	Pitch Diameter		+0.0000 -0.0004 Major Diameter	+0.0000 -0.0004 Pitch Diameter	Tolerance in lead (per inch)	Tolerances on half angle of thread (in minutes)
	Maximum	Minimum				
0.164-32	.1431	.1427	.1580	.1415	±.0003	±15
0.190-32	.1691	.1687	.1840	.1674	±.0003	±15
0.250-28	.2261	.2257	.2435	.2243	±.0003	±15
0.312-24	.2847	.2843	.3053	.2827	±.0003	±15
0.375-24	.3471	.3467	.3678	.3450	±.0003	±15
0.437-20	.4042	.4038	.4294	.4019	±.0003	±15
0.500-20	.4667	.4663	.4919	.4643	±.0003	±15

4.5.4.3.6 Push out (A.R.E. nuts or plate nuts). The minimum load required to push out the nut from the retainer to affect a permanent deformation axial with the threaded element of 0.030-inch, measured at the thread centerline between the test plate and the base of the nut, shall be not less than the values specified in Table II. The nuts shall be installed into 2024-T3 aluminum alloy panels having a thickness as specified on the applicable military standard or specification sheet. The stud or device for the push out test shall have a diameter equal to the thread diameter of the nut and the end of the stud shall be hemispherical.

4.5.4.4 Vibration test. Sample nuts with bolts shall be vibrated in accordance with MIL-STD-1312-7. There shall be no failures at less than 30,000 cycles.

4.5.4.5 Preparation for vibration test.

4.5.4.5.1 Room temperature test. The nuts shall be assembled in accordance with MIL-STD-1312-7. The installation torque shall be as specified in Table IX. The nuts shall then be removed and reinstalled to this torque four additional times before being vibrated.

4.5.4.5.2 Baking of test specimens. Half of the aluminum nuts shall be assembled on bolts and spacers and baked for three hours at 250°F, alloy steel, titanium, and CRES nuts shall be baked for six hours at 450°F. The baked specimens shall be allowed to cool in air to room temperature. The installation torque shall be as specified in Table IX. The nuts shall then be removed and reinstalled to this torque four additional times before being vibrated. Different spacers may be used for baking and vibration.

Downloaded from http://www.everyspec.com

4.5.4.5.3 Vibration test method. The assembly shall traverse the entire length of the slots in the test fixture. The test shall be run for 30,000 cycles. The test shall be stopped before the completion of the 30,000 cycles if a nut becomes disassembled from the bolt. The nut samples shall be examined under 10X magnification for cracks. The nuts shall be considered to have failed the vibration test under the following conditions:

a. If any structural failure (such as broken segments, locking inserts falling out) or cracks occur in the nuts during the test (not including failure of the bolt).

b. If any nut comes completely off the bolt or can be turned completely on or off the bolt with the fingers during or after completion of 30,000 cycles.

c. If relative rotation between any nut and bolt is greater than 180 degrees.

4.5.4.6 Stress durability (Alloy steel nuts). Alloy steel nuts shall be tested for 23 hours using bolts in accordance with 4.5.4.1. Bolts shall be loaded to 75 to 80 percent of the axial load specified on the applicable specification sheet or standard. Testing shall be in accordance with MIL-STD-1312-14.

4.5.4.7 Discontinuities. Discontinuities, such as laps, seams and inclusions shall be determined by magnetic particle inspection in accordance with MIL-I-6868 or fluorescent penetrant inspection in accordance with MIL-I-6866, as applicable. Such inspection shall be performed on finished nuts, free of lubrication, subsequent to any processing operations that could adversely affect the part. The magnetizing field shall be normal to the longitudinal axis of the nut. Test indications in themselves shall not be cause for rejection. Sample nuts with indications in other locations may be sectioned and measured microscopically to determine conformance to the requirements of Table III. Nuts shall not be dyed or marked for identification of magnetic particle inspection or dye penetrant.

4.5.4.8 Preparation for sealing effectivity test. Before conducting the sealing effectivity test, eight nuts (a total of 40) shall be simultaneously immersed for 24 hours in each of the following fluids:

a. MIL-T-5624 (JP4 or JP5 fuel).

b. MIL-L-7808 or MIL-L-23699 (lubricating oil).

c. MIL-A-8243 (anti-icing fluid).

d. MIL-C-43616 (cleaning compound).

e. MIL-H-83282 (hydraulic fluid).

The forty nuts shall not be cleaned before conducting the sealing effectivity test.

Downloaded from http://www.everyspec.com

4.5.4.8.1 Sealing effectivity test method. After preparing the nuts as specified in 4.5.4.8, the sealing effectivity test shall be conducted in accordance with MIL-STD-1312-19. The nuts shall be installed as specified in MIL-STD-1312-19, and torqued to the values specified in Table IX. The test plate shall be installed in a pressure pot as shown in Test 19 and pressurized to a static pressure of 100 psi for 30 minutes. JP4 or JP5 shall be used as the test fluid. The fluid shall be dyed to facilitate visual leak detection. After 30 minutes of static pressure, check for leaks. If no leaks are detected, cycle the pressure from +5 psi to +75 psi for 5000 cycles. If no leaks are detected during or after the 5000 cycles, pressurize the pot to +100 psi for 2 hours. If any leaks are detected during the sealing effectivity test, the nut shall have failed the test.

TABLE IX. Installation torque for sealing effectivity (in.-lb).

Nominal size	Aluminum alloy nuts	Steel nuts 1/	Titanium and CRES nuts 2/
0.164-32	20	20	20
0.190-32	30	45	40
0.250-28	80	110	90
0.312-24	90	250	210
0.375-24	155	390	320
0.437-20	340	620	490
0.500-20	440	840	670

1/ Installation torque values are in accordance with NAS 3350 (160 ksi).
2/ Installation torque values are in accordance with NAS 3350 (125 ksi).

4.5.4.8.2 Sealing effectivity test method (A.R.E. nuts or plate nuts). The sealing effectivity test for A.R.E. nuts or plate nuts shall be conducted in accordance with 4.5.4.8 and 4.5.4.8.1, except that the holes in the test plate shall be installation holes as specified on the applicable standard or specification sheet and the A.R.E. nuts shall be installed into the test plate.

4.6 Inspection of packaging. The sampling and inspection of preservation, packing and container marking shall be inspected and found to be in accordance with PPP-H-1581.

5. PACKAGING

5.1 Preservation, packing and marking. Self-locking sealing nuts shall be preserved, packed and marked for shipment in accordance with PPP-H-1581.

Downloaded from http://www.everyspec.com

Preservation and packing shall be level A or C as specified in the contract or purchase order (see 6.2). Packing shall be level A, B or C as specified in the contract or order (see 6.2).

5.2 Unless otherwise specified in the contract or purchase order, parts covered by this specification require: Unit packaging in flexible, transparent and heat sealed bags. Bag thickness shall be consistent with the size and weight of the contents and be able to withstand multiple handling without degradation. Use of paper bags is not permissible. Quantities per unit package shall be in accordance with PPP-H-1581.

5.2.1 Identification shall be in indelible ink and placed on each bag. The method of marking shall be in accordance with MIL-STD-129. Each bag shall be identified with the following information for source traceability:

a. Customer Part No.:
b. Manufacturer's Part No.:
c. Manufacturer's Lot No.:
d. Quantity:
e. Date:

6. NOTES

6.1 Intended use. The nuts are intended for use in sealing of pressurized threaded joints at temperatures up to 250°F or 450°F, with bolts and screws having Class 3A threads. The nuts are intended to prevent leakage of fluid at these threaded mechanical joints.

6.2 Ordering data.

6.2.1 Acquisition requirements. Acquisition documents should specify the following:

a. Title, number and date of this specification.

b. Military part number.

c. Applicable levels of packaging and packing (see 5.1).

6.2.2 Acquisition of nuts for which no product is listed on QPL-85615. Nuts may be acquired competitively subject to the following conditions:

a. The nuts shall conform to the requirements of this specification (4.3) and the applicable specification sheet.

b. Bids shall be solicited only from the manufacturers or distributors listed on QPL-85615.

Downloaded from http://www.everyspec.com

c. The successful bidder shall conduct the qualification testing in the presence of a Defense Contract Administration Services (DCAS) representative. Approval or disapproval of qualification inspections is the responsibility of DCAS. Upon approval, the manufacturer shall submit 45 units and a test report, via DCAS, to the Naval Air Development Center (6013), Warminster, PA 18974. A test report shall also be sent to the acquiring activity.

6.3 Qualification. With respect to products requiring qualification, awards will be made only for products which are, at the time set for opening of bids, qualified for inclusion in the applicable Qualified Products List (QPL-85615), whether or not such products have actually been so listed by that date. The attention of the contractors is called to these requirements, and manufacturers are urged to arrange to have the products that they propose to offer to the Federal Government tested for qualification in order that they may be eligible to be awarded contracts or purchase orders for the products covered by this specification. The activity responsible for the Qualified Products List is the Naval Air Systems Command, Department of the Navy, Washington, DC 20361; however, information pertaining to qualification of products may be obtained from the Naval Air Development Center, Warminster, PA 18974, Attention: Code 6013.

6.3.1 Qualification tests will be authorized only upon presentation of certified test reports indicating that the nuts conform to this specification (see 4.3.2) and the applicable specification sheet or a standard approved by the activity responsible for qualification.

6.4 Definitions.

6.4.1 Crack. A crack is defined as a clean crystalline break passing through a grain or a grain boundary without the inclusion of foreign elements.

6.5 Subject term (key word) listing.

Locking
Nut
Sealing

Custodians:
Army - AR
Navy - AS
Air Force - 11

Reviewer activities:
Army - MI, AV
Navy - SH, OS
Air Force - 99
DLA - IS

Preparing activity:
Navy - AS
(Project No. 5310-1222)

Downloaded from http://www.everyspec.com

INSTRUCTIONS: In a continuing effort to make our standardization documents better, the DoD provides this form for use in submitting comments and suggestions for improvements. All users of military standardization documents are invited to provide suggestions. This form may be detached, folded along the lines indicated, taped along the loose edge *(DO NOT STAPLE)*, and mailed. In block 5, be as specific as possible about particular problem areas such as wording which required interpretation, was too rigid, restrictive, loose, ambiguous, or was incompatible, and give proposed wording changes which would alleviate the problems. Enter in block 6 any remarks not related to a specific paragraph of the document. If block 7 is filled out, an acknowledgement will be mailed to you within 30 days to let you know that your comments were received and are being considered.

NOTE: This form may not be used to request copies of documents, nor to request waivers, deviations, or clarification of specification requirements on current contracts. Comments submitted on this form do not constitute or imply authorization to waive any portion of the referenced document*(s)* or to amend contractual requirements.

(Fold along this line)

(Fold along this line)

DEPARTMENT OF THE NAVY
Commanding Officer
Naval Air Engineering Center
Systems Engineering Standardization Department
(SESD), Code 93
Lakehurst, NJ 08733

OFFICIAL BUSINESS
PENALTY FOR PRIVATE USE $300

NO POSTAGE NECESSARY IF MAILED IN THE UNITED STATES

BUSINESS REPLY MAIL
FIRST CLASS PERMIT NO. 12503 WASHINGTON D. C

POSTAGE WILL BE PAID BY THE DEPARTMENT OF THE NAVY

Commanding Officer
Naval Air Engineering Center
Systems Engineering Standardization Department
(SESD). Code 93
Lakehurst, NJ 08733

ATTN: TJM (9322)

Downloaded from http://www.everyspec.com

(TO DETACH THIS FORM, CUT ALONG THIS LINE.)

STANDARDIZATION DOCUMENT IMPROVEMENT PROPOSAL

(See Instructions – Reverse Side)

1. DOCUMENT NUMBER	2. DOCUMENT TITLE
MIL-N-85615	Nut, Sealing, Self-Locking

3a. NAME OF SUBMITTING ORGANIZATION	4. TYPE OF ORGANIZATION *(Mark one)*
	☐ VENDOR
	☐ USER
b. ADDRESS *(Street, City, State, ZIP Code)*	☐ MANUFACTURER
	☐ OTHER *(Specify)*:

5. PROBLEM AREAS

a. Paragraph Number and Wording:

b. Recommended Wording:

c. Reason/Rationale for Recommendation:

6. REMARKS

7a. NAME OF SUBMITTER *(Last, First, MI)* – Optional	b. WORK TELEPHONE NUMBER *(Include Area Code)* – Optional
c. MAILING ADDRESS *(Street, City, State, ZIP Code)* – Optional	8. DATE OF SUBMISSION *(YYMMDD)*

DD FORM 82 MAR 1426

PREVIOUS EDITION IS OBSOLETE.