INCH-POUND

MIL-M-9868E
10 February 1993
SUPERSEDING
MIL-M-9868D
1 October 1970
AMENDMENT 2
20 September 1982

MILITARY SPECIFICATION

MICROFILMING OF ENGINEERING DATA, 35mm, REQUIREMENTS FOR

This specification is approved for use by all departments and agencies of the Department of Defense (DoD).

1. SCOPE

1.1 **Scope.** The principal objective is to prescribe microfilming requirements and testing guidance for engineering data (see 6.4.1) source document filming and delivery of the filmed images to primary DoD repositories (see 3.1.2.2). MIL-M-9868 contractual requirements, Sections 3, 4, and 5, only cover Type I film (silver-halide). Type II (diazo) and Type III (vesicular) film requirements are not covered but, where appropriate, their relationships are discussed for clarification purposes. Additionally, source document imaging accomplished through the use of an engineering data Computer-output Microfilm (COM) device (see 3.3.1) is covered. Other COM devices are not covered.

1.1.1 **Application.** DoD, other government agencies, civil agencies, contractors, engineering data suppliers (see 6.4.3), and any other users are cautioned that all requirements in the previous issue have been rewritten, some have been renumbered, combined, or deleted (see 6.8 and 6.9), and new requirements have been added. Requirements may be stratified throughout; so, it is necessary to read the entire specification (i.e., text, tables, figures, text footnotes, table footnotes, and figure footnotes). Stratification depends on the requirement being discussed. It must also be understood that the figures are representative; i.e., not drawn to scale.

User comments and recommendations for improvement are invited. Please use Standardization Document Improvement Proposal, DD Form 1426, when submitting your comments or recommendations. A sample form with the Preparing Activity (PA) information entered is located on page 45. If a DD Form 1426 is not available, a letter will suffice. Mail the DD Form 1426 or letter to: HQ AFMC/ENC, Wright-Patterson AFB OH 45433-5001.

AMSC N/A EDRS

a. MIL-M-9868 is one in a group of publications (i.e., military, Federal Government, non-government, and international) associated with engineering data source document microfilming. If additional noncontractual information is desired, several explanatory notes within Section 3 and Section 5 identify some of the associated publications.

b. MIL-M-9868 is a specification within the DoD EDRS (formerly designated EDMS) Standardization Area. Related information in other DoD standardization areas and Federal Supply Classes (FSCs) should not be overlooked (e.g., 6750, 6760, 8115, CMAN, DRPR, GDRQ, ILSS, IPSC, and PACK).

c. MIL-M-9868 requirements are intended to promote, not inhibit, philosophies of Total Quality Management (TQM) when a supplier (see 6.4.3) or any other user is tasked with implementing the requirements (see 3.4 and 4.2).

d. MIL-M-9868 reflects the present Defense Management Review (DMR) cost-effective standardization efforts (see 6.2). One of the efforts is to use Non-Government Standards (NGSs) to the maximum extent when they are available and practical. The development, coordination (consensus), and adoption of the referenced NGSs (see 2.2) is a result of the Government-Industry Equal Partner process.

1.1.2 MIL-D card designation. Throughout MIL-M-9868, the term "MIL-D" is used when referring to aperture, camera, copy, and image cards. These cards are a series of unique military 80-column tabulating cards with a "D" size aperture (i.e., DD Form 1562, Dual Purpose Engineering Document Card series). The "D" size aperture is a rectangular hole designed for 35mm microfilm. Commercial 80-column tabulating cards (popularly referred to as aperture cards) with either a C, D, E, or F size aperture are also available. However, the most commonly used commercial tabulating card is the card with a "D" size aperture. A commercial nontabulating A6 Aperture Card with either a C, D, E, or F size aperture is also available. The commercial A6 card size is metric (105mm width x 148mm length) but cards with a "D" size aperture are most commonly used.

1.1.3 Inch-pound designation. Even though the width of the raw stock is 35mm, MIL-M-9868 is assigned an inch-pound designation. All functional microfilm dimensional requirements are inch-pound units. However, within the textual paragraphs, metric dimensions (i.e., mathematical equivalents) are shown in parentheses. It must be understood that these mathematical equivalents are only a soft conversion of the inch-pound dimensional requirements.

1.1.4 Acquisition Management Systems Control (AMSC) designation. MIL-M-9868 by itself does not generate engineering data source documents. Therefore, an AMSC number is not applicable (see 6.3).

1.2 Classification. General microfilm classifications (i.e., type and class) are assigned in accordance with the film's photographic characteristics and functional usage. Within all classifications, Kind N (Negative) or Kind P (Positive) film is available. During processing, a clear line negative-appearing image is used with Kind N film and a opaque line positive-appearing image is used with Kind P film. For MIL-M-9868 purposes, generic expressions for the various classifications are shown in parenthesis. There are three general microfilm classifications:

a. Type I (silver-halide).

. Class 1 - Camera film, roll form or camera card. (First generation camera master.)

. Class 2 - Duplicating film, roll form. (Second generation noncamera silver duplicate master.)

. Class 3 - Duplicating film, roll form. (Third generation noncamera silver duplicate master.)

. Class 4 - Duplicating film, roll form. (Fourth generation noncamera silver duplicate master.)

b. Type II (diazo).[1/]

. Class 2 - Duplicating film. (Second generation distribution copy.)

. Class 3 - Duplicating film. (Third generation distribution copy.)

. Class 4 - Duplicating film. (Fourth generation distribution copy.)

c. Type III (vesicular).[1/]

. Class 2 - Duplicating film. (Second generation distribution copy.)

. Class 3 - Duplicating film. (Third generation distribution copy.)

. Class 4 - Duplicating film. (Fourth generation distribution copy.)

2. APPLICABLE DOCUMENTS

2.1 Government documents

2.1.1 Specifications, standards, and handbooks. The following references form a part of MIL-M-9868 to the extent specified. Unless otherwise specified, the issue of the reference is identified in the Department of Defense Index of Specifications and Standards (DoDISS) and supplement thereto or as cited in the solicitation. (See 6.2a.)

SPECIFICATIONS

FEDERAL

PPP-B-636 - Boxes, Shipping, Fiberboard.

1/ For secondary (customer) distribution purposes, primary DoD repositories use MIL-D copy cards (see 6.4.4c) when making copies of MIL-D image cards (see 6.4.4d). Other kinds of diazo and vesicular films (e.g., roll, sheet, strip, etc.) are not used (see 6.1.1 and 6.1.2).

MILITARY

MIL-C-9877 - Cards, Aperture.
MIL-C-9949 - Cards, Copy.

STANDARDS

MILITARY

MIL-STD-129 - Marking for Shipment and Storage.
MIL-STD-804 - Formats and Coding of Aperture, Camera, Copy, and Tabulating Cards.
MIL-STD-1806 - Marking Technical Data Prepared by or for the Department of Defense.

HANDBOOKS

MILITARY

MIL-HDBK-331 - Directory of DoD Engineering Data Repositories.

(Copies of the above references are available from DoDSSP - Customer Service, Standardization Documents Order Desk, 700 Robbins Avenue, Bldg. 4D, Philadelphia PA 19111-5094.)

2.1.2 Other government documents, drawings, and publications. The following references form a part of MIL-M-9868 to the extent specified. Unless otherwise specified, the reference is the latest issue or the issue cited in the solicitation. (See 6.2b.)

PUBLICATIONS

STATUTES

Title 18 - Sections 793 & 794 - Espionage and Censorship.

FEDERAL REGULATIONS

29 CFR - Part 1910, Subpart C - General Safety and Health Provisions.
36 CFR - Part 1230, Subpart C - Storage, Use, and Disposition of Microform Records.
40 CFR - Part 240, Subchapter I - Solid Wastes.
48 CFR - Subpart 27.4 - Rights in Data and Copyrights.

DoD REGULATIONS

DFARS - Subpart 227.4 - Rights in Data and Copyrights.
DoD 5200.1-R - Information Security Program Regulation.

DoD MANUALS

DoD 5220.22-M - Industrial Security Manual for Safeguarding Classified Information.

DoD FORMS

DD250 - Material Inspection and Receiving Report.

(Copies of the above references are available from the Superintendent of Documents, U.S. Government Printing Office, Washington DC 20402-0001.)

DD1562 - Series of Cards[2/] - Dual Purpose Engineering Document Card.

(For MIL-M-9868 purposes, these cards shall be purchased from sources identified in the following General Services Administration (GSA) schedules. Aperture card and copy card sources are listed in Schedule, 75 VIII A. Camera card sources are listed in Schedule, 67 IV B. Copies of the schedules are available from GSA, 4900 Hemphill St., PO Box 6477, Fort Worth TX 76115.)

CHARTS

NIST SRM1010a - Microcopy Resolution Test Chart.

(A copy of the above reference is available from the National Inst. of Stds. and Technology, Standard Reference Material Program, Bldg. 202/Room 215, Gaithersburg MD 20899.)

LISTS

EPA 560/4-90-011 - Title III List of Lists.

(A copy of the above reference is available from Document Distribution Center, Section 313, PO Box 12505, Cincinnati OH 45212.)

2.2 **Non-government publications.** The following references form a part of MIL-M-9868 to the extent specified. Unless otherwise specified, the issue of a DoD adopted reference is identified in the DoDISS and supplement thereto. The issue of a reference not DoD adopted is as listed or as cited in the solicitation. (See 6.2b.)

2/ Unprocessed MIL-D aperture, camera, and copy cards make-up this DD Form 1562 card series (see 6.4.4a, 6.4.4b, and 6.4.4c).

AMERICAN NATIONAL STANDARDS INSTITUTE (ANSI)

ANSI IT2.19-1986	-	Density Measurements - Geometric Conditions for Transmission Density. (DoD adopted.)
ANSI/NAPM IT9.1-1992	-	Silver Gelatin Film - Specifications for Stability. (DoD adopted.)
ANSI IT9.10-1991	-	Determination of the Curl of Photographic Film. (DoD adopted.)
ANSI/AIIM MS34-1990	-	Dimensions for Reels Used for 16mm and 35mm Microfilm. (DoD adopted.)
ANSI PH4.8-1985	-	Residual Thiosulfate and Other Chemicals in Films, Plates, and Papers - Determination and Measurement. (DoD adopted.)

(Copies of the above references are available from the American National Standards Institute, ATTN: Customer Service, 11 West 42nd Street, 13th Floor, New York NY 10036. DoD adopted references are also available from the DoDSSP - Customer Service, Standardization Documents Order Desk, 700 Robbins Avenue, Bldg. 4D, Philadelphia PA 19111-5094.)

2.3 Order of precedence. In the event of a conflict between MIL-M-9868 requirements and the cited references, the MIL-M-9868 requirement takes precedence. However, MIL-M-9868 requirements do not supersede applicable laws and regulations unless a specific exemption is in effect.

2.3.1 Copies. Suppliers (see 6.4.3), in connection with acquisition contracts (see 6.2), that do not have copies of the cited references (see 2.1.1, 2.1.2, and 2.2) should obtain them from the procuring activity or as directed by the contracting officer.

3. REQUIREMENTS

3.1 Unprocessed film. Raw stock shall be silver-halide, non-perforated, polyester-base, nominally 35mm width, and either 0.0040 inch (0.102mm) or 0.0055 inch (0.140mm) thick. The premounted film in an unprocessed MIL-D camera card (see 6.4.4b) shall also comply with these requirements. The film's Life Expectancy (LE) or permanence (formerly referred to as archival) shall comply with the LE500 requirement of ANSI/NAPM IT9.1-1992 (formerly designated PH9.1); and 36 CFR, Part 1230, Subpart C storage requirements apply.

3.1.1 Processed roll film. The film's edge curl shall be measured in accordance with ANSI IT9.10-1991, Test Method B. The transverse curl shall not exceed 0.062 inches (1.57mm) and both the longitudinal curl and the diagonal curl shall not exceed 0.094 inches (2.39mm). Splicing retakes of any individual frame (image or target) is not permitted. The delivered images shall be negative-appearing. When noncamera silver duplicate masters are specified for delivery (see 3.1.2 and 3.1.2.1), conventional-processing using either conventional print film (i.e., image-reversing, polarity not maintained) or direct-image print film (i.e., image-nonreversing, polarity maintained) may be used. At the start and at the end of each roll, a 24-inch (609.60mm) minimum length of film plus a 20-inch (508.00mm) minimum length of processed clear (no-image) film shall be required. Cameras, readers, and duplicating devices use the 24-inch (609.60mm) lengths as a threading leader and trailer. The

20-inch (508.00mm) lengths shall be used for residual thiosulfate ion testing (see 4.8 and Figure 12) and base-plus-fog density (D_{min}) testing (see 4.7.3 and Figure 11).

NOTE: Additional information on the noncamera silver duplicate film process can be found in ANSI/AIIM MS43-1988.

3.1.1.1 **Right and reverse reading.** When viewing roll film, the image's printed information for camera film and each odd generation noncamera silver duplicate film will be right reading to the observer (i.e., the film's emulsion layer will be wound out); for each even generation noncamera silver duplicate film, it will be reverse reading (i.e., the film's emulsion layer will be wound in). When viewing a MIL-D image card (see 6.4.4d) placed front side up in a reader and the film's emulsion layer is on the back side, the image's printed information will be right reading. When the emulsion layer is on the front side, the image's printed information may be reverse reading. Figure 1 provides examples of right and reverse reading images.

3.1.2 **Deliverable product medium.** The delivered microfilm shall be either processed 35mm Type I, Class 1 roll film or its individual frames mounted in unprocessed MIL-D aperture cards (see 6.4.4a) or it shall be processed MIL-D camera cards (35mm Type I, Class 1 film). A paper copy of the information identified in the title information target (see 3.10.6) and the security information target (see 3.10.8) shall also be included in each shipment. When roll film is delivered, the reels shall comply with ANSI/AIIM MS34-1990 and the film length shall be a nominal 100 feet (30.5m). When specified by the procuring activity, any combination of noncamera silver duplicate film (i.e., processed 35mm Type I, Class 2 or Type I, Class 3 or Type I, Class 4 roll film or their individual frames mounted in unprocessed MIL-D aperture cards) shall also be delivered. (See 6.2c.)

3.1.2.1 **Image card medium.** When the procuring activity specifies that the deliverable product medium is MIL-D image cards (see 6.3.4d), the following card construction requirements shall apply: (a) keypunching (Hollerith information) in accordance with MIL-STD-804; (b) card size (80-column tabulating) and a Type I microfilm carrier (pressure-sensitive bonding tape) in accordance with MIL-C-9877; and (c) Style A buildup in accordance with MIL-C-9949. Target frames (see 3.10.1) shall also be included in each shipment. A Type II microfilm carrier (suspension-type pocket holder) in accordance with MIL-C-9877 and Style B buildup in accordance with MIL-C-9949 may be specified in lieu of a Type I microfilm carrier. (See 6.2c.)

3.1.2.2 **Destination point.** Unless otherwise specified by the procuring activity, the principal location for delivering engineering data microfilm images is a primary DoD repository. A primary DoD repository is where the official record copy of data (camera masters and noncamera silver duplicate masters) are stored and, where copies of the master data are made and distributed to the repository customers. MIL-HDBK-331 provides addresses and identifies the kind of engineering data stored at each primary DoD repository. (See 6.2c.)

NOTE: Additional information on microfilm storage can be found in ANSI IT9.11-1991 (formerly designated PH1.43).

3.2 Safety. Film handling precautions should comply with: (a) all in-house agency/department regulatory direction; (b) all manufacturers' recommendations; and (c) OSHA requirements, specifically General Safety and Health Provisions, 29 CFR, Part 1910, Subpart C.

3.2.1 Environmental. Prior to disposing of Type I film, recovery of its silver ingredient may be necessary. During the disposal or recovery process, applicable state laws, local laws, in-house agency/department regulatory direction, and federal laws (specifically Solid Wastes, 40 CFR, Part 240, Subchapter I) should be implemented. The silver recovery process does generate waste (e.g., a salt and bleach solution) which may require a controlled disposal.

NOTE: Additional information on silver recovery can be found in AIIM TR4-1989.

3.2.1.1 Toxic substances. Chlorofluorocarbons (CFCs), halons, and chlorinated solvents presently targeted for elimination and identified within Environmental Protection Agency Title III List of Lists (EPA 560/4-90-011) are not applicable for MIL-M-9868 purposes.

3.3 Frame dimensions. Figure 2 illustrates the dimensional requirements of a 35mm frame. The "t" dimension is measured (frame-to-frame) from trailing edge to trailing edge (see 3.3.2). The "t" dimension includes a working tolerance for frame cutting and follow-on mounting (see 3.3.5. and Figure 4) in a MIL-D aperture card. Designations and dimensional requirements for a 35mm frame shall comply with Table I.

TABLE I. 35mm frame requirements

Designation	Dimension
a1 (image width) b1 (image length)	1.200 inches (30.48mm) maximum 1.615 inches (41.02mm) maximum
a2 (frame width) b2 (frame length)	1.250 inches (31.75mm) with a tolerance of plus 0.000 inches and minus 0.032 inches (0.77mm) 1.750 inches (44.45mm) with a tolerance of plus 0.000 inches and minus 0.062 inches (1.57mm)
t (frame pitch) *	2.000 inches (50.80mm) with a tolerance of minus 0.000 inches and plus 0.062 inches (1.57mm)
* For COM, 3.3.2 applies.	

3.3.1 COM devices. For MIL-M-9868 purposes, an engineering data COM device may be used to simulate (generate) images. When used, the following applies: (a) the generated information shall be transferred to 35mm Type I, Class 1 roll film; (b) source document information provided on standard flat

sheet documents, Size A, B, C, D, E, or F (see 3.4.1a) can be simulated. Information provided on standard roll documents, Size G, H, J, or K (see 3.4.1b) or on an oversize document (see 3.4.3c) cannot be simulated; and (c) if the image is generated on a COM screen, the following dimensions apply:

Document Simulated	Width	Length (Tolerance, Plus 4.0 Minus 0.0 Percent)
Size A	0.6406 x	0.5000 inches (16.271 x 12.700mm)
Size B	0.6406 x	1.0156 inches (16.271 x 25.796mm)
Size C	1.0000 x	1.3125 inches (25.400 x 33.338mm)
Size D	0.8750 x	1.3750 inches (22.225 x 34.925mm)
Size E	1.1000 x	1.4333 inches (27.940 x 36.406mm)
Size F	0.9000 x	1.3000 inches (22.860 x 33.020mm)

3.3.2 **COM frame centering.** Center line markings shall be generated on the frame's length and width edges. The markings shall not obscure or interfere with the image. However, the frame pitch or pull-down (dimension "t") shall be measured (frame-to-frame) from one center line length marking to the next center line length marking, not from trailing edge to trailing edge (see 3.3 and Table I).

NOTE: Additional information on engineering data COM devices can be found in ANSI/AIIM MS38-1987.

3.3.3 **Source document centering.** First, the center point of the camera's aperture shall be in optical alignment with the center point of the camera copy board within plus or minus 0.125 inches (3.17mm). Secondly, when positioning a flat sheet source document, its center line markings (horizontal and vertical) shall be aligned within plus or minus 0.125 inches (3.17mm) of the camera copy board markings. When positioning a roll size or oversize source document, the center point of each segment shall be aligned within plus or minus 0.125 inches (3.17mm) of both the camera's aperture and the camera copy board center point. The camera copy board surface (particularly the unused portion not occupied by the source document) shall be as white or whiter than the source document's background area or have a minimum reflectance of 80 percent. Figure 3 provides examples of standard flat sheet size source document positioning.

3.3.4 **Off-center positioning.** When viewing a frame of microfilm, the image should be centered (lengthwise and widthwise). However, if a source document's information is only located in an isolated portion (e.g., its left side), unless otherwise specified by the procuring activity, this information shall be positioned so its filmed image is centered within the frame. (See 6.2d.)

3.3.5 **Roll film cutting and aperture card mounting.** When cutting individual frames for mounting in an unprocessed MIL-D aperture card (see 6.4.4a), Figure 4 dimensional requirements apply. During mounting, the film's light-sensitive emulsion layer (image plane) shall be located on the opposite side of the card's pressure-sensitive bonding tape (Type I microfilm carrier). Table II provides mounting (aperture centering) tolerances. The premounted film in an unprocessed MIL-D camera card (see 6.4.4b) shall comply with the Type I, Class 1 requirment set forth in Table II.

TABLE II. Mounting (aperture centering) tolerance

Microfilm	Tolerance
Type I, Class 1	± 0.008 inches (0.20mm)
Type I, Class 2	± 0.012 inches (0.30mm)
Type I, Class 3	± 0.016 inches (0.41mm)
Type I, Class 4	± 0.020 inches (0.51mm)

3.4 Engineering data source document filming. A source document should have opaque lines and be free of cosmetic and printing flaws. However, if the source document is of poor quality, a blow back of the filmed image will also be of poor quality; i.e., microfilming cannot improve the quality of a flawed source document (see 4.2).

NOTE: Additional information on line conventions and lettering can be found in ANSI/ASME Y14.2M-1992.

3.4.1 Standard document sizes. Engineering data source document information is usually provided on standard flat sheet or roll documents. The dimensions and required reduction ratios (see Table III) for standard flat sheet and roll documents follow:

a. Standard flat sheet size dimensions.

Size	Width Length	Reduction Ratio
A	11 x 8½ inches (279.40mm x 215.90mm)	1:16
B	11 x 17 inches (279.40mm x 431.80mm)	1:16
C	17 x 22 inches (431.80mm x 558.80mm)	1:16
D	22 x 34 inches (558.80mm x 863.60mm)	1:24
E	34 x 44 inches (863.60mm x 1117.60mm)	1:30
F	28 x 40 inches (711.20mm x 1016.00mm)	1:30

b. Standard roll size dimensions.

Size	Width	Length[3/]
G	11 inches (279.40mm)	22½ thru 90 inches (571.50 thru 2286.00mm)
H	28 inches (711.20mm)	44 thru 143 inches (1117.60 thru 3632.20mm)
J	34 inches (863.60mm)	55 thru 176 inches (1397.00 thru 4470.40mm)
K	40 inches (1016.00mm)	55 thru 143 inches (1397.00 thru 3632.20mm)

NOTE: Additional information on standard document sizes can be found in ANSI Y14.1-1980(R1987).

3.4.1.1 Standard metric document sizes. Metric flat sheet and roll documents may be specified in lieu of standard flat sheet or roll documents. (See 6.2e.)

3/ As applicable, the reduction ratio may be 1:16, 1:24, or 1:30; also, the length dimensions are increased in equal 11 inch (279.40mm) increments, except the last increment of the G size lengths.

The dimensions and required reduction ratios (see Table III) for standard metric flat sheet and roll documents follow:

a. **Metric flat sheet size dimensions.**

Size	Width	Length	Reduction Ratio
A4	210mm	297mm	1:16
A3	297mm	420mm	1:16
A2	420mm	594mm	1:16
A1	594mm	841mm	1:24
A0	841mm	1189mm 4/	1:30

b. **Metric roll size dimensions.**

Size	Width	Length	Reduction Ratio
A4x3	297mm	630mm	1:24
A4x4	297mm	841mm	1:24
A4x5	297mm	1051mm	1:30
A4x6	297mm	1261mm	1:30
A4x7	297mm	1471mm	1:30
A4x8	297mm	1682mm	1:30
A4x9	297mm	1892mm	1:30
A3x3	420mm	891mm	1:24
A3x4	420mm	1189mm	1:30
A3x5	420mm	1482mm	1:30
A3x6	420mm	1783mm	1:30
A3x7	420mm	2080mm	1:30
A2x3	594mm	1261mm	1:30
A2x4	594mm	1682mm	1:30
A2x5	594mm	2102mm	1:30
A1x3	841mm	1783mm	1:30
A1x4	841mm	2378mm	1:30
A0x2	1189mm	1682mm	1:30
A0x3	1189mm	2523mm	1:30

NOTE: Additional information on standard metric document sizes can be found in ISO 5457-1980 and ASME Y14.1M-1992.

3.4.2 **Single frame filming.** In accordance with Table III, Group A, Group B, and Group C source documents shall be filmed in a single frame (see Figure 3). However, for MIL-M-9868 purposes, the width of any individual document shall not exceed 34.000 inches (863.60mm) and the length of any individual document shall not exceed 44.000 inches (1117.60mm) except the A0 metric size document (see Footnote 4). Multi-frame numbering, discussed in 3.6, is not applicable. Centering discussed in 3.3.3, 3.3.5, and Table II; and Table III reduction ratios apply.

4/ Even though the length of the A0 document is more than 44.000 inches (1117.60mm), it shall be filmed in a single frame (see 3.4.2).

TABLE III. Reduction ratios

Source Document Size*	Ratio	Image Size
Group A Width: Not more than 18.000 inches (457.20mm) Length: Not more than 24.000 inches (609.60mm)	1:16	Group A Width: Not more than 1.125 inches (28.58mm) Length: Not more than 1.500 inches (38.10mm)
Group B Width: More than 18.000 inches (457.20mm) but not more than 24.000 inches (609.60mm) Length: More than 24.000 inches (609.60) but not more than 36.000 inches (914.40mm)	1:24	Group B Width: More than 0.750 inches (19.05mm) but not more than 1.000 inches (25.40mm) Length: More than 1.000 inches(25.40mm) but not more than 1.500 inches (38.10mm)
Group C Width: More than 24.000 inches (609.60mm) but not more than 36.000 inches (914.40mm) Length: More than 36.000 inches (914.40mm) but not more than 48.400 inches (1229.36mm)	1:30	Group C Width: More than 0.800 inches (20.32mm) but not more than 1.200 inches (30.48mm) Length: More than 1.200 inches (30.48mm) but not more than 1.613 inches (40.98mm)
Group D Width: Not more than 36.000 inches (914.40mm) Length: More than 48.400 inches (1229.36mm)	1:30	Group D Width: Not more than 1.200 inches (30.48mm) Length: Not more than 1.613 inches (40.98mm)
Group E Width: More than 36.000 inches (914.40mm) but not more than 48.400 inches (1229.36mm) Length: More than 36.000 inches (914.40mm)	1:30	Group E** Width: Not more than 1.200 inches (30.48mm) Length: Not more than 1.613 inches (40.98mm)
Group F (Oversize) Width: More than 48.400 inches (1229.36mm) Length: More than 48.400 inches (1229.36mm)	1:30	Group F(Oversize) Width: Not more than 1.200 inches (30.48mm) Length: Not more than 1.613 inches (40.98mm)

* Documents with Groups A, B, and C, require single frame filming (i.e., one page/sheet per frame). Documents within Groups D, E, and F, require multi-frame filming (i.e., one segment of each page/sheet per frame). When a document is not within both the width and length limits, the next higher reduction ratio shall be used.
** The image for Group E documents is rotated 90°.

3.4.3 Multi-frame filming. In accordance with Table III, Group D, Group E, and Group F source documents shall be filmed in segments. However, for MIL-M-9868 purposes, the width of any individual segment shall not exceed 34.000 inches (863.60mm) and the length of any individual segment shall not exceed 44.000 inches (1117.60mm) except documents rotated 90° (see Figure 6) may be 48.000 inches (1215.20mm) in width. Multi-frame numbering discussed in 3.6; centering discussed in 3.3.3, 3.3.5, and Table II; and Table III reduction ratios apply.

a. Group D documents not more than 34.000 inches (863.60mm) in width and more than 44.000 inches (1117.60mm) in length shall be filmed in segments as illustrated in Figure 5.

b. Group E documents more than 34.000 inches (863.60mm) but not more than 48.000 inches (1215.20mm) in width, and more than 34.000 inches (863.60mm) in length shall be rotated 90° and filmed as illustrated in Figure 6.

c. Group F (oversize) documents more than 48.000 inches (1215.20mm) in width and more than 44.000 inches (1117.60mm) in length shall be filmed as illustrated in Figure 7.

d. Each adjacent segment shall have a 4.000 inch (101.60mm) overlap, but to have a full frame for the last segment, the overlap may be more than 4.000 inches (101.60mm).

3.4.3.1 Multi-frame segment identification. In addition to multi-frame numbering (see 3.6), unless otherwise specified by the procuring activity, an open area within each segment (i.e., other than the first segment which shall contain the source document's title information) shall identify the document number, CAGE code, revision letter, and the page/sheet number. The identifying information can be machine printed or hand stamped on the segments; or an overlay may be used. The identifying characters shall be black in color and their filmed image shall be a minimum of 0.125 inches (3.17mm). When using an overlay, place the identifying characters on a white background. When viewing the image or a paper print copy, the identifying information shall be conspicuous but it shall not interfere with the document's image. (See 6.2f.)

3.5 Book form document. These documents are an in-depth textual, illustrative, or a combination textual and illustrative tutorial description of a process or technology that is not subject to revision. The information is usually provided on paper no larger than 3½ x 11 inches (215.90 x 279.40mm). Do not confuse this kind of book form document with a multi-sheet Size A or Size B book form drawing which is subject to revision (see 3.13a).

3.5.1 Book form document positioning. Unless otherwise specified by the procuring activity, a book form document shall be positioned for single frame filming as illustrated in Figure 8 (i.e., four pages per frame). However, there may be instances that only require one, two, or three pages in some frames. For example, (a) inconsistent page numbering (1-1, 1.A, etc.); (b) unique characteristics (an auxiliary test equipment set-up); (c) a separate cover/title page; and (d) the total number of pages is not divisible by four. Multi-frame numbering, discussed in 3.6, is not applicable. A 1.000 inch (25.40mm) space with a tolerance of minus 0.000 inches and plus 0.125 inches

(3.17mm) shall be required between adjacent pages. Centering discussed in 3.3.3, 3.3.5, and Table II; and Table III reduction ratios apply. Prior to delivery, if any page requires a retake, all pages within its frame shall be refilmed; i.e., do not deliver the refilmed (flawed page) in an individual frame. (See 6.2g.)

3.6 Multi-frame numbering. Source documents that require multi-frame filming shall have each frame (segment) identified with the letter "F" followed by consecutive numbers (i.e., F1, F2, F3, etc.). The identifying characters can be machine printed or hand stamped; or an overlay may be used. The identification shall be located at the lower center of each segment but it shall not obscure or interfere with the image (see Figures 5, 6, and 7). When this is not possible, the identification shall be located as near as possible to the lower center where it does not obscure or interfere with the image. The identifying characters shall be black in color and their filmed image shall be a minimum of 0.125 inches (3.17mm). When using an overlay, place the identifying characters on a white background. When multi-frame numbering is applicable for any page/sheet within a multi-page or multi-sheet document, each segment of that page/sheet shall be numbered independently (i.e., identified as F1, F2, F3, etc.).

3.7 Reduced-scale document. Unless otherwise specified by the procuring activity, when filming a reduced-scale size of any source document, centering discussed in 3.3.3, 3.3.5, and Table II; and Table III reduction ratios apply. (See 6.2h.)

3.8 Undimensioned drawing legend. Unless otherwise specified by the procuring activity, when filming an undimensioned drawing, the words "UNDIMENSIONED DRAWING COPY--USE FOR REFERENCE ONLY" shall be filmed. If the words are not preprinted, they shall be applied by machine printing, hand stamping, or an overlay. The words (legend) shall be placed in an open area of the drawing or each segment of a drawing that requires multi-frame filming. The words (legend) shall be black in color and their filmed image shall be a minimum of 0.125 inches (3.17mm). When using an overlay, place the words on a white background. When viewing the image or a paper print copy, the words shall be conspicuous. A reduced-scale drawing no smaller than one-half size may be used. Whether the full-size or reduced-scale size is filmed, centering discussed in 3.3.3, 3.3.5, and Table II; and Table III reduction ratios apply. (See 6.2i.)

NOTE: Additional information on undimensioned drawings and other kinds of drawing formats and practices can be found in MIL-STD-100.

3.9 Unique DoD legends. Each source document shall be marked with its DoD distribution statement and, when applicable, appropriate documents shall also be marked with the DoD rights-in-data information (legend) or with a DoD militarily critical data identification (legend). Filming requirements for these unique DoD legends follow:

a. Distribution statement identity. Unless otherwise specified by the procuring activity, distribution statement information shall be filmed and its format (i.e., identity and language) shall comply with MIL-STD-1806. If not

preprinted, the statement can be machine printed or hand stamped; or an overlay may be used. The words (legend) shall be placed in an open area of each document or each segment for documents that require multi-frame filming. The words shall be black in color and their filmed image shall be a minimum of 0.062 inches (1.57mm). When using an overlay, place the words on a white background. When viewing the image or a paper print copy, the statement shall be conspicuous. An example of a DoD distribution statement is located at the bottom of the cover page. (See 6.2i.)

b. **Rights-in-data identity.** Unless otherwise specified by the procuring activity, rights-in-data information shall be filmed and its format (i.e., identity and language) shall comply with Federal Acquisition Regulation (FAR), 48 CFR, Subpart 27.4 and Defense Federal Acquisition Regulation Supplement (DFARS), Subpart 227.4. The identity of the rights-in-data information will either be unlimited or limited. When it is limited, a proprietary ownership legend or a Government Purpose License Right (GPLR) agreement (legend) shall be filmed. If the legend is not preprinted, it shall be machine printed or hand stamped or an overlay may be used. The legend shall be placed in an open area of each document or each segment of a document that requires multi-frame filming. The legend's words and identity shall be black in color and their filmed image shall be a minimum of 0.062 inches (1.57mm). When using an overlay, the words shall be placed on a white background. When viewing the image or a paper print copy, the legend shall be conspicuous. (See 6.2i.)

c. **Militarily critical identity.** When the procuring activity specifies that the source document information is militarily critical, the words "MILITARILY CRITICAL DATA" shall be filmed. If the words are not preprinted, they shall be applied by machine printing, hand stamping, or an overlay. The words shall be placed in an open area of each document or each segment of a document that requires multi-frame filming. The words (legend) shall be black in color and their filmed image shall be a minimum of 0.125 inches (3.17mm). When using an overlay, the words shall be placed on a white background. When viewing the image or a paper print copy, the words shall be conspicuous. (See 6.2i.)

NOTE: Additional information on militarily critical applicability can be found in MIL-STD-1806.

3.10 Test targets. To make sure acceptable microfilm images are delivered, a camera copy board layout for various test targets (see 3.10.5, 3.10.6, 3.10.7, and 3.10.8) shall be required.

3.10.1 Target frames. Each roll/cassette shall contain individual frames for a start, security classification, title information, and end target; also, a combination resolution, reduction ratio, and density target. When required by the camera operator, filming of additional targets (see Figure 11) may be necessary. For each delivery (i.e., a lot as described in 4.2.1), each roll/cassette shall only require a single title information target (frame) in the first roll/cassette of each lot. See 3.10.7 and 3.10.8 for additional exceptions and, for COM, see 3.11 and Table VIII. Figure 9 provides examples of the various target frames.

3.10.2 Reduction ratio strips. A total of three strips (i.e., one for each reduction ratio) will be necessary. The strip's material may be metal, plastic, or any other substance with a maximum reflectance of 6 percent. The nominal width of each strip shall be 1.000 inches (25.40mm). A card nominally 3.000 inches (76.20mm) square in size identifying the strip's reduction ratio (i.e., 1:16, 1:24, or 1:30) shall be placed adjacent to its right edge. The identifying information shall be black in color, placed on a white background, and its filmed image shall be a minimum of 0.062 inches (1.57mm). Figure 10 illustrates a strip-up camera copy board layout and specifies additional dimensional requirements.

3.10.3 Resolution charts. A total of 15 NIST SRM1010a test charts (i.e., three sets of five each - a center chart and four corner charts for each reduction ratio) will be necessary. Each chart shall be trimmed to a nominal 2.500 inches (63.50mm) square in size. The charts shall have a certificate of compliance certified by NIST (formerly NBS). The center chart shall have the dot of its "10." pattern located within 0.250 inches (6.35mm) of the test target layout center point and its edges shall also be parallel with the test target layout edges. The four corner charts shall have the dots of their "10." pattern located within 0.250 inches (6.35mm) of the appropriate test target layout diagonal line; also, one pair of opposite edges shall be parallel with the appropriate diagonal line (i.e., positioned so each pattern will read left to right as viewed from its centering dot). Figure 10 illustrates a strip-up camera copy board layout and specifies additional dimensional requirements. Table IV identifies the smallest pattern (highest number) that shall be resolved on all five charts for each reduction ratio.

TABLE IV. Smallest pattern requirement

Microfilm	Reduction Ratio	Pattern
Type I, Class 1	1:16 1:24 1:30	7.1 5.0 4.5
Type I, Class 2	1:16 1:24 1:30	6.3 4.5 4.0
Type I, Class 3	1:16 1:24 1:30	5.6 4.0 3.6
Type I, Class 4	1:16 1:24 1:30	5.0 3.6 3.2

3.10.4 Density patches. A total of six patches (i.e., three sets of two each - one 6 percent patch and one 50 percent patch for each reduction ratio) will be necessary. Each patch shall be trimmed to a nominal 6.000 inches

(152.40mm) square in size. The material for the 6 percent patch shall be uniform in reflectance, resistant to curl, nonglossy, and black in color. The material for the 50 percent patch shall be uniform in reflectance, resistant to curl, nonglossy, and grey in color. The 6 percent patch is used to approximate the reflectance of the source document's lines and characters. The 50 percent patch is used to approximate the reflectance of the source document's background areas. The background density value for the 6 percent patch shall not exceed 0.10 and, for the 50 percent patch it shall be between 1.00 to 1.20. With proper set-up, lighting, and density, the reproducibility (see 3.17) of the filmed images should be acceptable. Without proper set-up, lighting, and density, resolving resolution patterns, using the same exposure setting for roll-to-roll and card-to-card duplication, and the readability of an image or a paper print copy may not be possible. Figure 10 illustrates a strip-up camera copy board layout and specifies additional dimensional requirements.

NOTE: Additional information on camera copy board lighting can be found in ANSI/AIIM MS26-1990.

3.10.5 **Start target and end target.** Within each cassette of camera cards or each roll of film a single start and a single end target shall be filmed at reduction ratio, 1:16. A camera copy board layout (target) of sufficient size shall be made to identify the word "START" or the words "END PLEASE REWIND." The words shall be black in color, placed on a white background, and their filmed image shall be a minimum of 0.250 inches (6.35mm) (see Figures 9 and 11).

3.10.6 **Title information target.** Each delivery (i.e., a lot as described in 4.2.1) shall have a single target filmed at reduction ratio, 1:16. A camera copy board layout (target) of sufficient size shall be made to identify the following: (a) the contract/purchase order number; (b) the prime contractor's CAGE code; and (c) the filming activity (usually a service bureau) information. The filming activity information shall include its company name, in-house job number, point of contact (camera operator), telephone number, and the date the source documents were filmed. The information shall be black in color and placed on a white background, and its filmed image shall be a minimum of 0.125 inches (3.17mm) (see Figures 9 and 11).

3.10.7 **Resolution, reduction ratio, and density target.** Within each cassette of camera cards or each roll of film, a total of six targets shall be filmed at the following reduction ratios. At the start of each roll or cassette in ascending order (one 1:16, one 1:24, and one 1:30 target) and at the end in descending order (one 1:30, one 1:24, and one 1:16 target) (see Figures 9 and 11). However, if the source document filming within a roll/cassette only requires the use of one or two reduction ratios, filming a target for any unused ratio is not required. The target's dimensional requirements (camera copy board layout) shall comply with 3.10.2, 3.10.3, 3.10.4 and Figure 10.

3.10.8 **Security information target.** When applicable, within each cassette of camera cards or each roll of film, two targets shall be filmed at reduction ratio, 1:16. One at the start and one at the end of each roll or cassette. The highest security classification (i.e., top secret, secret, or confidential) within the roll or cassette shall be identified at the top and at the bottom of

each target. The downgrading and declassification schedule shall also be entered along with the following warning notice: "This film contains images whose information affects the national defense of the United States within the meaning of espionage laws, Title 18, U.S.C., Sections 793 and 794, the transmission, release, or revelation of which in any manner to an unauthorized person or entity is prohibited by law." A camera copy board layout (target) of sufficient size shall be made to identify the security information. The information shall be black in color and placed on a white background. The filmed image for the classification heading at the top and bottom of the target shall be a minimum of 0.250 inches (6.35mm). The filmed image for the remaining information shall be a minimum of 0.062 inches (1.57mm) (see Figures 9 and 11).

3.10.8.1 Classified documents. Prior to filming a classified source document, the top and bottom of each page/sheet, shall be marked (machine printed or hand stamped) with its security classification (i.e., top secret, secret, or confidential) and, each unclassified page/sheet filmed within the same roll/cassette shall be marked (machine printed or hand stamped) unclassified. When the filmed images are delivered (i.e., a lot as described in 4.2.1) in MIL-D image card medium, the classified images (cards) and the unclassified images (cards) may be shipped in either a single shipping container or two containers; i.e., the cards that have classified images and the cards that have unclassified images may be separated and delivered in separate shipping containers. A single container is the preferred method. In either instance, any shipping container with classified images shall be marked with the highest security classification used within the container (see 5.2.2).

3.11 COM target frames. Generating the resolution, reduction ratio, and density target, described in 3.10.7, is not applicable. However, each processed roll of COM film shall have a start frame and end frame (see 3.10.5), a title information frame (see 3.10.6) and, when applicable, two security information frames (see 3.10.8). If it is not possible to generate the title and security information frames, glue labels containing the information to the reel and to the beginning and end of each roll.

3.12 MIN and contract number. An overlay (legend) with the purchase order or contract number and Microfilm Identification Number (MIN) shall be placed in the unused frame area below the source document image (see Figure 9) or each segment for documents that require multi-frame filming. The legend's information shall be white in color, placed on a black background, and its filmed image shall be a minimum of 0.125 inches (3.17mm).

3.12.1 Indexing. Indexing is usually not required particularly when the deliverable medium is MIL-D image cards. However, unless otherwise specified by the procuring activity, individual frames (target and image) shall be indexed. The identifying information can be machine printed or hand stamped; or an overlay may be used. The roll or camera card cassette shall be identified with a letter followed by a consecutive number for each frame (e.g., A1, A2, A3, etc.). When more than one roll/cassette is required, continue the numbering (e.g., B501, B502, B503, etc.) on each additional roll/cassette. The identifying information shall be black in color and its filmed image shall be a

minimum of 0.125 inches (3.17mm). When using an overlay place the identifying information on a white background. Locate the indexing information as follows: (a) for documents that require single frame filming near the center of the document's lower border line; and (b) for documents that require multi-frame filming and for target frames near the center of the bottom of each frame (see Figure 9). In either instance, the indexing information shall not obscure or interfere with the image. When this is not possible for single frame filming, locate as near as possible to the center of the source document's lower border line where the indexing information does not obscure or interfere with the image. When indexing documents that require multi-frame filming (see 3.4.3), the F1, F2, F3 segment identification (see 3.6) is not used. This segment identification is replaced with a slant (/) followed by the frame number (e.g., A46/1, A47/2, A48/3, etc.) (see Figure 9). Letters "O" and "I" shall not be used to identify a roll/cassette. When more than 24 rolls/cassettes are required, the 25th and subsequent rolls/cassettes shall be identified by dual letters (e.g., AA12001, AA12002, AA12003, etc.) (See 6.2j.)

3.13 **Filming (frame) sequence.** Single page, single sheet, multi-page, or multi-sheet source documents shall be filmed in ascending page or sheet number sequence (i.e., logical progression from a reader's point-of-view). Additionally, the documents shall be grouped by size (i.e., film all "A" size first, "B" size second, etc., etc.). Figure 11 illustrates the overall filming (frame) sequence.

a. Unless otherwise specified by the procuring activity, when filming multi-sheet Size A or Size B book form drawings, each sheet shall be filmed one sheet per frame. If any sheet is revised, to identify the revision, all sheets shall be refilmed not just the revised sheet. Do not confuse this requirement with the book form document positioning discussed in 3.5.1 and illustrated in Figure 8. (See 6.2k.)

NOTE: Additional information on multi-sheet book form drawings can be found in MIL-STD-100.

b. When possible, a book form document (see 3.5) shall be filmed within the same roll or cassette of camera cards. If not possible, continue on the next roll or cassette.

c. Unless otherwise specified by the procuring activity, all source documents that require multi-frame filming (see 3.4.3) shall be filmed right-to-left; i.e., frame 1 (see Figures 5, 6, and 7) shall contain the document's title information. (See 6.2k.)

3.14 **Density.** The background density values shall comply with Table V. The Table V values are visual-diffuse transmission densities. All measurements shall be measured in accordance with ANSI IT2.19-1986 (formerly designated PH2.19) guidance. The base-plus-fog density value (D_{min}) shall not exceed 0.08. When a source document is flawed (i.e., it has erasures, patching, faded paper, dark backgrounds, half-tone areas, etc.), non-complying density values may be acceptable.

TABLE V. Background density value (negative-appearing image)

Microfilm	Value
Type I, Class 1 (camera master, 1N)	1.00 to 1.20 *
Type I, Class 2 (direct-image print film, 2N) Type I, Class 3 (direct-image print film, 3N) Type I, Class 4 (direct-image print film, 4N)	1.10 to 1.40 1.15 to 1.55 1.15 to 1.70
Type I, Class 2 (conventional print film, 2P) Type I, Class 3 (conventional print film, 3N) Type I, Class 4 (conventional print film, 4P)	0.04 to 0.16 ** 0.90 to 1.30 0.04 to 0.24 **
Type I, Class 1 (COM, 1N)	1.70 minimum

* The majority of engineering data source documents are usually fine line originals and generally are high-contrast. Thus, the 1.00 to 1.20 value range applies. However, when the source document is not a fine line original or it is generally low-contrast, a value range of 0.90 to 1.10 shall apply.

** When the filming process uses conventional print film, the second (2P) and fourth (4P) generation will have positive-appearing images. Due to the difficulty in measuring a positive-appearing image's line density, the background density is typically measured. Thus, the 0.04 to 0.24 range applies.

3.15 Residual thiosulfate ion. To make sure processed film is properly washed to eliminate residual thiosulfate (over time, thiosulfate decomposition will deteroriate image quality), the methylene blue test method described in ANSI PH4.8-1985 applies. The test shall be performed within two weeks after film processing. The test result shall comply with the LE500 requirement described in ANSI/NAPM IT9.1-1992 (i.e., be less than 0.014 grams per square meter). This test is critical to the LE500 requirement. Thus, inspection and verification (see 4.1, 4.1.1, and Figure 13) at the time of testing (see 4.8) shall be accomplished. When cutting test samples from either roll or camera card film, Figure 12 dimensional requirements apply.

3.16 Visual. When using a reader/viewer to evaluate the deliverable images, every line and character shall be eye-readable and free of defects recorded in Table VI. However, if any of these defects or any other defect is only cosmetic and will not affect reproducibility (see 3.17), it is acceptable.

3.17 Reproducibility. When 3.10.2, 3.10.3, and 3.10.4 requirements are complied with, the reproducibility (i.e., a paper copy blow back) of the source document's image should be satisfactory. However, information located in multi-frame overlap areas does not need to comply with stringent reproducibility requirements if the information is legible in a preceding or succeeding frame (segment).

TABLE VI. Visible defects

1. Document title block information is missing, incomplete, or blurred.
2. Characters/symbols are filled in or they are too light to be legible.
3. Lines are discontinuous or too light to be legible.
4. Image is partially missing, over/under developed, over/under exposed, or out-of-focus.
5. Film is blank or has blurred images.
6. Frame sequence, image orientation, center line markings, or multi-frame numbering is missing or not in proper order.
7. Film has blisters, tears, scratches, or other similar flaws.
8. Dust spots, finger marks, water spots, fog, edge fog, or other similar imperfections are obscuring the image.

3.18 **Legible copy method.** When the procuring activity specifies that the legible copy method shall be used, in lieu of measuring the background density (see 3.10.4, 3.14, and Table V), the following applies: (a) make a paper print copy in accordance with Table VII; and (b) when evaluating the fourth generation paper print, every line and character shall be legible. (See 6.21.)

TABLE VII. Legible copy requirement

Microfilm	Make Paper Print From
Type I, Class 1	3rd Image Reproduction *
Type I, Class 2	2nd Image Reproduction *
Type I, Class 3	1st Image Reproduction *
Type I, Class 4	Paper Reproduction
* MIL-D copy cards (Type II film), as appropriate, shall be used when making the required number of reproduction images for each class of microfilm.	

4. QUALITY ASSURANCE PROVISIONS

4.1 **Responsibility for inspection.** Unless otherwise specified in the contract or purchase order, the supplier (see 6.4.3) shall perform Table VIII tests. The absence of a test requirement herein shall not relieve the supplier of the responsibility to deliver microfilm that complies with all MIL-M-9868 and any other contractual requirement. A supplier's in-house quality inspection process may be used to ascertain from its viewpoint contractual

conformance. However, it shall not relieve the supplier of the responsibility to perform all prescribed tests. Figure 13 provides an example of a supplier's certification of compliance that shall be copied, completed, and included in each microfilm delivery. (See 6.2m.)

4.1.1 Responsibility for compliance. Unless otherwise specified in the contract or purchase order, to make sure the delivered microfilm complies with Table VIII and all other MIL-M-9868 requirements, verification (i.e., signature approval in block 21, DD Form 250) by a DoD in-plant quality assurance inspector or any other designated contractual representative is required. However, the procuring activity reserves the right to: (a) have independent testing performed by someone other than the supplier; (b) have the primary DoD repository destination point perform the inspection, certification, and verification (i.e., signature approval in block 21, DD Form 250); or (c) implement any combination of the inspection, certification, and verification options. (See 6.2m.)

TABLE VIII. Test requirements (Type I film)

Test	Reqt. Para.	Test Para.
Film Curl	3.1.1	4.3
Frame & Centering dimensions*	3.3, 3.3.3, 3.3.4, & Table I	4.4
Frame Mounting	3.3.5	4.5
Reduction Ratio**	3.10.2	4.6.1
Resolution**	3.10.3 & 3.10.7	4.6.2
Background Density	3.10.4, 3.14 & Table V	4.7.1, 4.7.2, & 4.7.3
Residual Thiosulfate Ion	3.15	4.8
Visual	3.16	4.9
Reproducibility	3.17	4.10

* For COM, 3.3.1 and 3.3.2 also apply.

** For COM, reduction ratio and resolution tests are not applicable.

4.2 Microfilm testing. The Acceptable Quality Level (AQL) and testing procedures shall comply with 4.3 through 4.10. The inspection (testing) requirements are necessary to produce an acceptable microfilm image (product). The identified tests are used to quantify the effectiveness (quality assurance and control) of the filming procedures. However, it must be understood that emphasis on the procedures will invariably increase the quality of the filmed images while inspection by itself which is only an information gathering process cannot improve quality (see 3.4).

4.2.1 Preconditions. For DD Form 250 purposes, the term "lot" means the number of rolls or their individual frames mounted in MIL-D aperture cards or the number of cassettes (i.e., MIL-D camera cards) delivered in an individual

shipment. When the contract/purchase order requires multiple shipments, the film in each shipment shall be inspected (tested) and approved. For testing purposes, the term "lot" means the number of samples necessary to perform an individual test.

4.3 Edge curl test. Randomly select three 12.000 inch (304.80mm) test areas along the length of each roll of film designated for MIL-D aperture card mounting. The test areas shall be tested to comply with 3.1.1. Using a depth or height gauge, record the curl's dimensions. If any dimension does not comply, the entire roll shall be rejected and refilmed.

4.4 Frame and centering dimensions test. Randomly select three image frames (test samples) from each roll or cassette of camera cards. The samples shall be tested to comply with 3.3, 3.3.3, 3.3.4, and Table I. Using a calibrated measuring device (e.g., a viewing glass that has a reticle), record the frame dimensions. If any measurement does not comply, the entire roll or cassette shall be rejected and refilmed.

4.5 Frame mounting test. Randomly select three image frames (test samples) from each roll of film designated for MIL-D aperture card mounting. The samples shall be tested to comply with 3.3.5, Table II, and Figure 4. Using a calibrated measuring device (e.g., a viewing glass that has a reticle), record the mounting dimensions. If any measurement does not comply, three additional frames (test samples) shall be randomly selected and tested. If any measurement on the additional samples also does not comply, the entire roll shall be rejected and refilmed.

4.6 Reduction ratio and resolution tests.

4.6.1 Reduction ratio. The target frames at the beginning and at the end of each roll or cassette of camera cards shall be tested to comply with 3.10.2. Using a calibrated measuring device (e.g., a viewing glass that has a reticle), record the length of the reduction ratio strip's image. The length shall be 0.500 $\pm$ 0.005 inches (12.700 $\pm$ 0.13mm). If the measurement does not comply, the entire roll or cassette shall be rejected and refilmed.

4.6.2 Resolution. The target frames at the beginning and at the end of each roll or cassette of camera cards shall be tested to comply with 3.10.3, 3.10.7, and Table IV. Using a microscope, view all patterns down to the smallest (highest number) identified in Table IV. These patterns shall be resolved on all five charts for each reduction ratio. To be resolved each pattern shall have five distinguishable lines in both the vertical and horizontal direction. If more than one applicable pattern on any chart is not resolved, the entire roll or cassette shall be rejected and refilmed.

4.6.2.1 Spurious resolution. Spurious resolution (i.e., more than five lines in a resolved pattern) may be a reason for non-compliance. If it is, the following applies: rotate the image (target frame) 90 degrees and view again. After rotation, if the resolved pattern no longer has more than five lines, the spurious resolution flaw is acceptable. A slightly out-of-focus camera may also be the reason for spurious resolution.

4.6.2.2 Astigmatism. Astigmatism (i.e., a pattern not resolved in either direction) may be a reason for non-compliance. If it is, the following applies: Rotate the image (target frame) 45 degrees and view again. If the unresolved pattern is now resolved in one direction and a further rotation of 90 degrees resolves it in the other direction, the astigmatism flaw is acceptable.

4.7 Background density tests.

4.7.1 Image frames. Randomly select three frames (test samples) from each roll or cassette of camera cards. The samples shall be tested to comply with 3.14 and Table V. Using a densitometer, three separate measurements shall be taken within the document image area of each sample. The selected measurement points shall be in an area that is free of characters and lines and located as near as possible to a diagonal across the frame. If any of the three measurements on any sample does not comply with Table V, three additional frames (test samples) shall be randomly selected and tested. If any of the three measurements on the additional samples also do not comply, the following applies: after making sure the densitometer is set-up in accordance with its manufacturer's recommendation, reaccomplish the test on all six samples. If any of the three measurements on more than one sample still does not comply, determine if the non-compliance is due to source document flaws discussed in 3.14. If the non-compliance is only due to source document flaws, the non-complying background density requirement is acceptable. If the non-compliance is not due to source document flaws or incorrect densitometer set-up, the entire roll or cassette shall be rejected and refilmed. When a flawed frame is refilmed, a hole shall be punched near the center of each rejected frame(s). If the rejected frame was a segment of a multi-sheet, multi-page, or multi-frame document, all segments (frames) shall be refilmed, not just the flawed frame. When MIL-D image cards are delivered, unless otherwise specified by the procuring activity, the rejected (hole punched) frame(s) shall be included in the shipment. A MIL-D image card that has a hole punched in its film is commonly referred to as a frame card. (See 6.2n.)

4.7.2 Target frames. The six frames (test samples) which include the images of the density patches shall be tested to comply with 3.10.4. Using a densitometer, measure the density of each patch's image. If any measurement does not comply with 3.10.4, the entire roll or cassette shall be rejected and refilmed.

4.7.3 Base-plus-fog (D_{min}). Cut and remove two 4.000 inch (101.60mm) lengths (test samples) of processed clear (no-image) film. One length from the beginning and one length from the end of each roll or select two camera cards (test samples) with processed clear (no-image) film. One from the beginning and one from the end of each cassette (see Figure 11). The samples shall be tested to comply with 3.14. Using a densitometer, measure the density of each sample. If the measurement of any sample does not comply, the entire roll or cassette shall be rejected and refilmed.

4.8 Residual thiosulfate ion test. Cut and remove two 6.000 inch (152.40mm) lengths (test samples) of processed clear (no-image) film. The samples shall be tested to comply with 3.15. The samples shall be from each

batch of 10 consecutively filmed rolls that used the same processing chemicals. One sample shall be from the beginning of the first roll and the other sample shall be from the end of the tenth or last roll (see Figure 11). When testing a camera card cassette, remove two cards from the beginning of the first cassette and two cards from the end of the tenth or last cassette. The removed camera card samples shall also have processed clear (no-image) film. The removed samples (roll film or camera cards) shall be further cut into four test units. The unit dimensions shall comply with Figure 12. Only one sample unit from the first roll/cassette and one sample unit from the last roll/cassette needs to be tested. The two remaining test units are to be used as a backup; i.e., if the first units fail to comply with 3.15 or if they are mishandled, then the backup units shall be tested. If a sample unit from the first roll or cassette does not comply, all 10 rolls or cassettes shall be rejected and refilmed. If only the sample unit from the tenth or last roll or cassette does not comply, working in reverse order, new test samples from roll/cassette 8 and 3, 6 and 2, etc., etc. shall be removed and tested. If only the sample unit from roll/cassette 8 does not comply, the test is complete and only roll/cassette 9 and 10 must be rejected and refilmed.

4.9 Visual test. Randomly select 12 image frames (test samples) from each roll of film or cassette of camera cards. The samples shall be visually inspected to comply with 3.16 and Table VI. Using a viewer, view the selected samples for compliance. If more than one sample does not comply, 12 additional image frames (test samples) shall be randomly selected and visually inspected. If more than one sample of the additional samples also does not comply, the entire roll or cassette shall be rejected and refilmed. If no more than one sample fails in the second test, the visual requirement is acceptable. However, any rejected frame shall have a hole punched near its center and it shall be refilmed. The refilming and delivery procedure described at the end of 4.7.1 applies.

4.10 Reproducibility test. Randomly select a total of four image frames (test samples), two each from any two rolls or cassettes of camera cards scheduled for shipment; i.e., a lot as described in 4.2.1. If the lot consists of a partial or a single roll/cassette, only two image frames need to be tested. The samples shall be tested to comply with 3.17. Make a paper print copy of each selected sample. If any paper print copy is not eye-readable (i.e., a satisfactory blow back of the source document), the entire roll or cassette that the sample was selected from shall be rejected and refilmed.

4.11 Packaging inspection.

4.11.1 Materials. The packaging materials shall be visually inspected to comply with 5.1, 5.1a, and 5.1b.

4.11.2 Marking. Interior containers and shipping containers shall be visually inspected to comply with 5.2, 5.2.1, and 5.2.2.

5. Packaging

5.1 Packaging requirements. The construction of interior containers and shipping containers shall be in accordance with PPP-B-636. The following packing methods apply:

a. **Image cards.** Unless otherwise specified by the procuring activity, place the cards in a fiberboard box specifically designed for holding 10,000 cards. For smaller amounts (i.e., 2000-10,000), place corrugated fiberboard spacers in the unused space of the fiberboard box or place the cards in a similarly constructed smaller size fiberboard box or wrap the cards with a layer of bubble cushioning material and place the wrapped cards in a scrim bag (see 6.4.2); for amounts less than 2000, place fiberboard stiffeners on the top and bottom of the cards, secure with rubber bands, and place in a cushioned envelope. Place all fiberboard boxes, scrim bags, or envelopes (interior containers) and a paper copy packing list (i.e., an overall numerical listing of all source document numbers) in a single fiberboard shipping container. If the shipment only requires a single fiberboard box, scrim bag, or envelope, it can be used as the shipping container. (See 6.2o.)

b. **Roll film.** Unless otherwise specified by the procuring activity, wind the film on a plastic reel and place it in a plastic reel box. Place all plastic reel boxes (interior containers) and a paper copy packing list (i.e., an overall numerical listing of all source document numbers) in a single fiberboard shipping container. (See 6.2o.)

5.2 **Standard marking.** Unless otherwise specified by the procuring activity, interior containers and shipping containers shall be marked or labeled in accordance with MIL-STD-129. The markings or labels shall use black waterproof ink printing that will not become illegible during shipping. (See 6.2p.)

NOTE: The civil agencies listed in the concluding material may specify FED-STD-123 in lieu of MIL-STD-129.

5.2.1 **Special marking.** In addition to MIL-STD-129 requirements, shipping containers shall also be marked with the following precaution: "THIS SHIPMENT - ONLY TO BE OPENED AT THE DESTINATION POINT - CONTAINS HIGH COST ENGINEERING DATA MICROFILM IMAGES. DO NOT EXPOSE TO RAIN, WATER, OR EXTREME TEMPERATURE." (See 6.2p.)

5.2.2 **Security classification marking.** When applicable, in addition to 3.10.8, MIL-STD-129, and the 5.2.1 precaution, appropriate DoD 5200.1-R and DoD 5220.22-M requirements apply. (See 6.2p.)

6. NOTES

(This section provides information of a general or explanatory nature; but, the information is not a contractual requirement.)

6.1 **Intended use.** To help various users to better understand primary DoD repository engineering data microfilming needs; particularly those who film engineering data source documents and make noncamera silver duplicate masters or those who inspect the filmed images or those who store and maintain the camera masters and noncamera silver duplicate masters or those who make distribution copies (i.e., MIL-D copy cards and/or paper prints) of a camera

master or a noncamera silver duplicate master for dissemination to others or those who provide engineering data policy or those who provide technical content expertise or those who perform administrative oversight management or those who administer engineering data purchasing contracts or those who provide acquisition data management policy or those who provide configuration management policy or those who provide program management policy.

6.1.1 **Repository microfilm usage.** Within a primary DoD repository, as applicable, the principal microfilm usage (operational practices) follow: (a) Type I, Class 1 film will make-up the permanent (archival) master file; (b) Type I, Class 2 conventional print film and Type I, Class 3 direct-image print film will make-up a backup reserve file. The conventional print film images in this file are commonly referred to as reverse reading duplicate silver masters; (c) Type I, Class 3 conventional print film and Type I, Class 2 direct-image print film will make-up a primary reserve file. The conventional print film images in this file are commonly referred to as right reading duplicate silver masters; (d) Type I, Class 4 conventional and direct-image print film, when specified by the procuring activity, would make-up a special project file. Otherwise Type I, Class 4 film is not used; (e) Type II, Class 2 film (MIL-D copy cards) is issued to support agency/department local customer ongoing or one-time needs; (f) Type II, Class 3 film (MIL-D copy cards) is issued to support agency/department non-local customer needs; and (g) Type II, Class 4 film (MIL-D copy cards) is issued to support, as necessary, agency/department local and non-local customer needs.

6.1.2 **MIL-D tabulating card microfilm relationships.** Because primary DoD repositories use unique MIL-D tabulating cards (see 6.4.4), the cards' physical relationship to Type I and Type II microfilm is provided in Table IX.

TABLE IX. MIL-D tabulating cards

Microfilm	Generation	Unclassified Card Designation	Classified Card Designation	Emulsion Layer	Tape Location
Type I, Class 1	1st	DD Form 1562A	DD Form 1562A*	Back	Front
Type I, Class 1	1st	DD Form 1562G	DD Form 1562F	Back	Front
Type I, Class 2**	2nd	DD Form 1562C	DD Form 1562E	Front	Back
Type I, Class 3**	3rd	DD Form 1562B	DD Form 1562D	Back	Front
Type I, Class 4**	4th	DD Form 1562C	DD Form 1562E	Front	Back
Type II, Class 2	2nd	DD Form 1562I	DD Form 1562K	Front	Back
Type II, Class 3	3rd	DD Form 1562H	DD Form 1562J	Back	Front
Type II, Class 4	4th	DD Form 1562I	DD Form 1562K	Front	Back

* DD Form 1562A (camera cards) do not normally have special security markings preprinted (i.e., red stripe, classification, etc.); if used to film classified source documents, the special markings must not be overlooked.

** Conventional print film. If direct-image print film is used, DD Form 1562B (unclassified) and DD Form 1562D (classified) cards would be applicable.

6.2 Acquisition requirements. When purchasing engineering data microfilm images, applicable Data Item Descriptions (DIDs) (DD Form 1664) and associated tailoring are contractually implemented through the selection and ordering options set forth in MIL-T-31000. MIL-M-9868 amplifies the MIL-T-31000 options to make sure an optimum balance between needs and cost is fulfilled. The Contract Data Requirements List (DD Form 1423) and any other contractual document implemented by the contracting officer should specify the appropriate options for the following:

a. Issue of DoDISS with the MIL-M-9868 title, revision, and date stipulated separately. (See 2.1.1.)

b. Issue of other government and non-government references. (See 2.1.2 and 2.2.)

c. Deliverable microfilm and medium. (See 3.1.2, 3.1.2.1, and 3.1.2.2.)

d. Off-center positioning. (See 3.3.4.)

e. Metric document sizes. (See 3.4.1.1.)

f. Multi-frame segment identification. (See 3.4.3.1.)

g. Book form document positioning. (See 3.5.1.)

h. Reduced-scale document. (See 3.7.)

i. Legends. (See 3.8, 3.9a, 3.9b, and 3.9c.)

j. Indexing. (See 3.12.1.)

k. Multi-frame filming sequence. (See 3.13a and 3.13c.)

l. Legible copy method. (See 3.18.)

m. Inspection, certification, and verification. (See 4.1 and 4.1.1.)

n. Frame cards. (See 4.7.1.)

o. Shipping containers and packing. (See 5.1a and 5.1b.)

p. Standard, special, and classified container markings. (See 5.2, 5.2.1, and 5.2.2.)

6.3 Data requirements. MIL-M-9868 should not be used as a source document for a DID. However, the AMSDL does identify DIDs, DI-EDRS-80410(NSA) and DI-EDRS-80907(Army) within the EDRS Standardization Area. The data requirements associated with these two DIDs are only applicable when used with a SOW that is limited to NSA (National Security Agency) and A/MICOM (Army Missile Command). Therefore, for MIL-M-9868 purposes, data requirements and suggested tailoring is not applicable nor provided.

6.4 Definitions. General microfilm terminology explanations can be found in AIIM TR2-1992, Glossary of Imaging Technology. However, for MIL-M-9868 purposes, significant terms that require clarification are explained here.

6.4.1 Engineering data. Those data, regardless of form or characteristic, required to define a design or process that can be used to produce, support, operate, test, and inspect a product or service. Some examples follow: engineering drawings, logic diagrams, computer printouts, manufacturer processes, wiring board patterns, parts list, test methods, performance characteristics, electrical circuits, etc.. Furthermore, the term "engineering data" is commonly used when referring to technical data, engineering drawings, level 3 data, level 2 data, production data, digitized data, product definition data, digital data, and other similar expressions. For MIL-M-9868 purposes, do not confuse these generic expressions when filming or discussing an engineering data source document.

6.4.2 Scrim bag. A flexible container constructed with an outer layer of cloth and inner backing of aluminum. Its opening has matted surfaces for pressure sealing. The sealed bag provides a degree of vapor and water leakage protection.

6.4.3 Supplier. Any entity identified as a prime contractor, subcontractor, vendor, seller, or service bureau and, any other entity who may perform testing or filming as prescribed herein. For MIL-M-9868 purposes, the identified entity expressions are considered to be synonymous.

6.4.4 Tabulating card. An 80-column card, with or without an aperture, on which information is indexed using punched holes that can be machine-sensed for sorting, collating, listing, or totaling. Individual explanations for the unique MIL-D tabulating card series (i.e., DD Form 1562, Dual Purpose Engineering Document Card) follow:

a. **Aperture card.** An unprocessed tabulating card with an aperture (rectangular hole) designed for the subsequent insertion of a developed frame of Type I silver-halide (camera or noncamera) microfilm. Furthermore, the expression "aperture card" is commonly used when referring to any tabulating or nontabulating card (military or commercial), whether processed or unprocessed, that has an aperture. Do not confuse the popularity of the generic "aperture card" expression with the formal definition of an aperture card, camera card, copy card, and image card.

b. **Camera card.** An unprocessed tabulating card whose aperture contains undeveloped Type I silver-halide camera microfilm. A camera card is designed for its film to be exposed and processed while in the aperture. Thus, camera cards can only be used with cameras capable of this process.

c. **Copy card.** An unprocessed tabulating card whose aperture usually contains undeveloped Type II diazo noncamera microfilm. A copy card's undeveloped diazo film is designed to be exposed and processed by contact printing in a card-to-card duplicating device (i.e., the emulsion layer of the undeveloped film must be in direct contact with the emulsion layer of the film in the image card being copied).

d. **Image card.** A processed aperture card, camera card, or copy card. A processed card is keypunched (Hollerith information), has eye-readable (unaided) header information, and its aperture (rectangular hole) contains developed (imaged) microfilm (silver-halide, diazo, or vesicular).

6.4.4.1 **Nonaperture tabulating card.** In addition to cards with an aperture (i.e., the DD Form 1562 card series), there are two nonaperture (i.e., contain no film) unprocessed 80-column engineering data tabulating cards (DD Form 1309, Model or Type Designation Card and DD Form 1310, Part and Drawing Number Card). When processed, these nonaperture cards are keypunched (Hollerith information), have eye-readable (unaided) header information and, their purpose is to supplement an image card's Hollerith information.

6.5 **Acronyms.** All acronyms used within MIL-M-9868E are spelled out here; they may, or may not, be spelled out in the associated text, tables, or figures.

a. AIIM - Association for Information and Image Management

NOTE: AIIM has replaced NMA (National Micrographics Association). NMA may be referenced in some related documents or publications.

b. AMSC - Acquisition Management Systems Control

c. AMSDL - Acquisition Management System and Data Requirements Control List

d. ANSI - American National Standards Institute

e. AQL - Acceptable Quality Level

f. ASCC - Air Standardization Coordinating Committee

g. ASME - American Society of Mechanical Engineers

h. CAGE - Commercial and Government Entity

NOTE: CAGE has replaced FSCM (Federal Supply Code for Manufacturers). FSCM replaced CIN (Code Identification Number). FSCM and CIN may be used in some related documents or publications.

i. CFCs - Chlorofluorocarbons

j. CFR - Code of Federal Regulations

k. CMAN - Configuration Management

l. COM - Computer-output Microfilm

NOTE: In the concluding material, COM is an acronym for the Department of Commerce.

m. DFARS - Defense Federal Acquisition Regulation Supplement

n. DIA - Defense Intelligence Agency

o. DID - Data Item Description

p. DLA - Defense Logistics Agency

q. DMA - Defense Mapping Agency

r. DMR - Defense Management Review

s. DNA - Defense Nuclear Agency

t. DoD - Department of Defense

u. DoDISS - Department of Defense Index of Specifications and Standards

v. DoDSSP - Department of Defense Single Stock Point

w. DRPR - Drawing Practices

x. DSN - Defense Switched Network

NOTE: DSN has replaced AUTOVON (Automatic Voice Network). AUTOVON may be used in some related documents or publications.

y. EDRS - Engineering Data Reproduction Systems

NOTE: EDRS has replaced EDMS (Engineering Data Micro-reproduction Systems). EDMS may be referenced in some related documents or publications.

z. EPA - Environmental Protection Agency

aa. FAR - Federal Acquisition Regulation

bb. FSC - Federal Supply Class

cc. GDRQ - General Design Requirements

dd. GPLR - Government Purpose License Rights

ee. GSA - General Services Administration

ff. ILSS - Integrated Logistics Support Standards

gg. IPSC - Information Processing Standards for Computer

hh. ISO - International Organization for Standardization

ii. LE - Life Expectancy

jj. MIN - Microfilm Identification Number

kk. N/A - Not Applicable

ll. NAPM - National Association of Photographic Manufacturers

mm. NASA - National Aeronautics and Space Administration

nn. NGS - Non-Government Standard

oo. NIST - National Institute of Standards and Technology

NOTE: NIST has replaced NBS (National Bureau of Standards). NBS may be referenced in some related documents or publications.

pp. NSA - National Security Agency

qq. OSHA - Occupational Safety and Health Administration

rr. PA - Preparing Activity

ss. PACK - Packing, Packaging, Preservation and Transportability

tt. SMA - Standardization Management Activity

uu. SOW - Statement of Work

vv. SRM - Standard Reference Material

ww. TQM - Total Quality Management

xx. U.S.C. - Used as an Abbreviation for United States Code

yy. WP - Working Party

6.6 International standardization agreements. An agreement between Australia, Canada, New Zealand, United Kingdom, and the United States is in effect. The agreement is administered by the Air Standardization Coordinating Committee (ASCC), Working Party (WP) 30 (formerly WP104). The agreement's provisions are documented in ASCC Functional Standard, AIR-STD-104/15C. Within the agreement, the following MIL-M-9868E requirements apply:

MIL-M-9868E Requirement	Paragraph
Undimensioned drawing legend	3.8
Distribution statement identity	3.9a
Rights-in-data identity	3.9b
Military critical identity	3.9c
Classified documents	3.10.8 and 3.10.8.1
Packaging	5.1, 5.1a, and 5.1b
Standard and special markings	5.2 and 5.2.1
Security classification marking	5.2.2

To accommodate the international agreement, the following notification procedures apply: (a) When any proposed or formal MIL-M-9868 amendment, notice, revision, or cancellation project affects the agreement, Preparing Activity (PA) 16 should notify the appropriate ASCC management committee focal point at HQ USAF/XOXX(ISO), ASCC Office Pentagon, Washington DC 20330-5058 or, if necessary, take some other appropriate measure; and (b) if the agreement's MIL-M-9868E requirement is deleted or revised, the ASCC management committee focal point should notify PA 16.

6.7 Subject term (key word) listing.

Background density
Image frame
Negative-appearing image
Reduction ratio
Resolution
Supplier certification
Target frame

6.8 Supersession data. MIL-M-9868E is a complete revision of the previous issue; however, it does not supersede any other DoDISS document.

6.9 Changes from previous issue. Due to the extensiveness of the changes, marginal notations (asterisks, vertical lines, etc.) are not used.

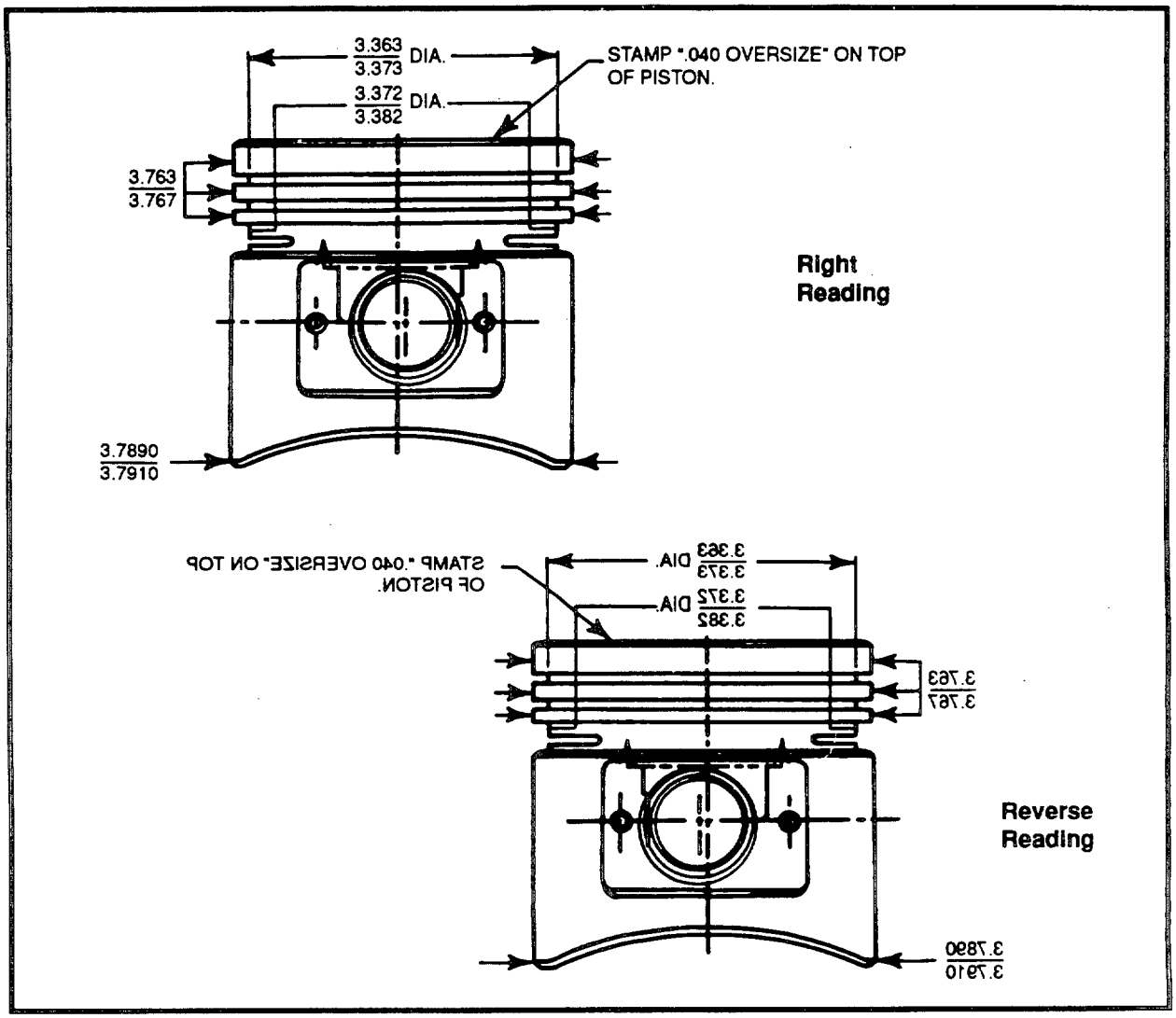

FIGURE 1. Examples of right reading and reverse reading

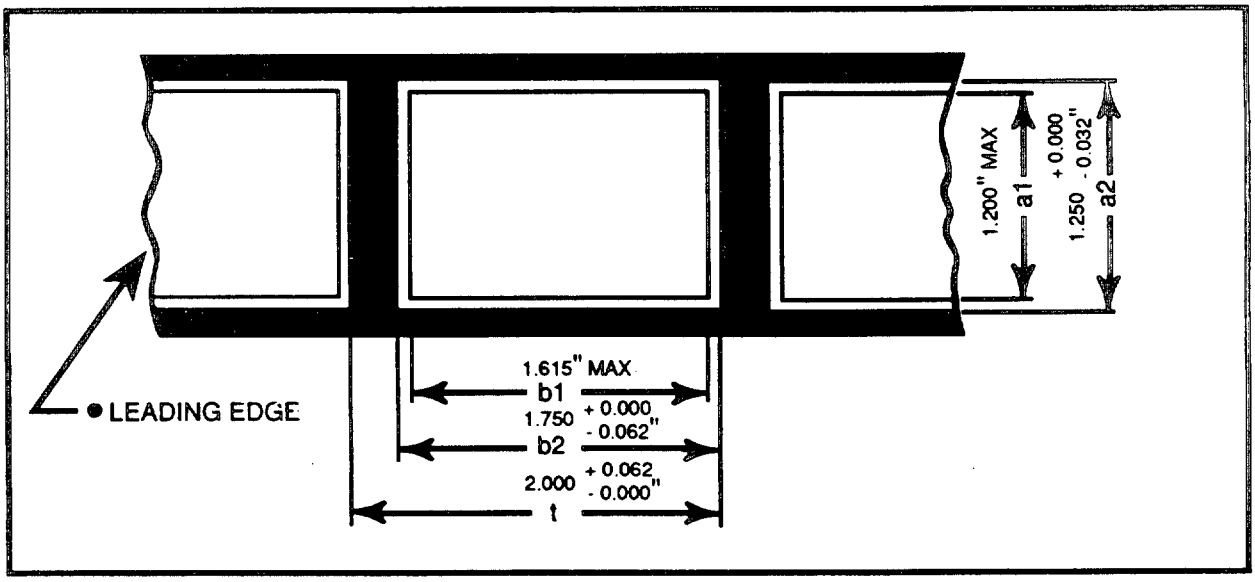

FIGURE 2. Individual frame dimensions and designations

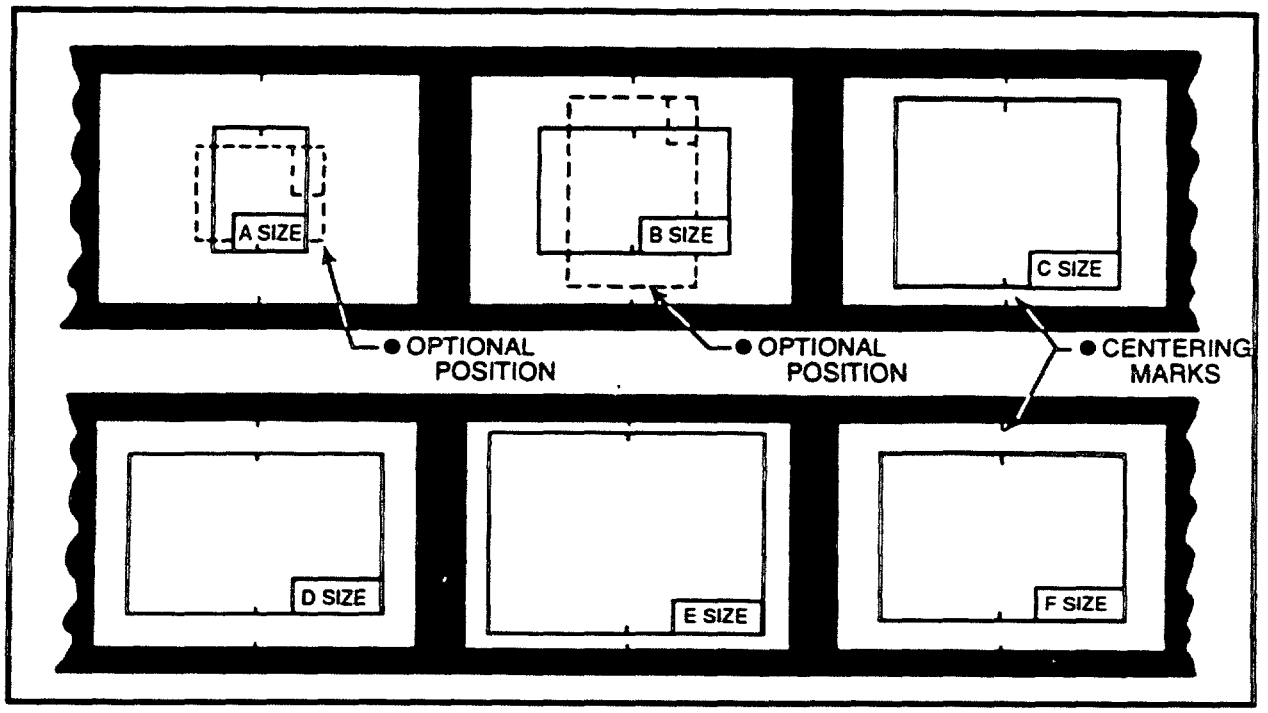

FIGURE 3. Standard flat sheet size document positioning

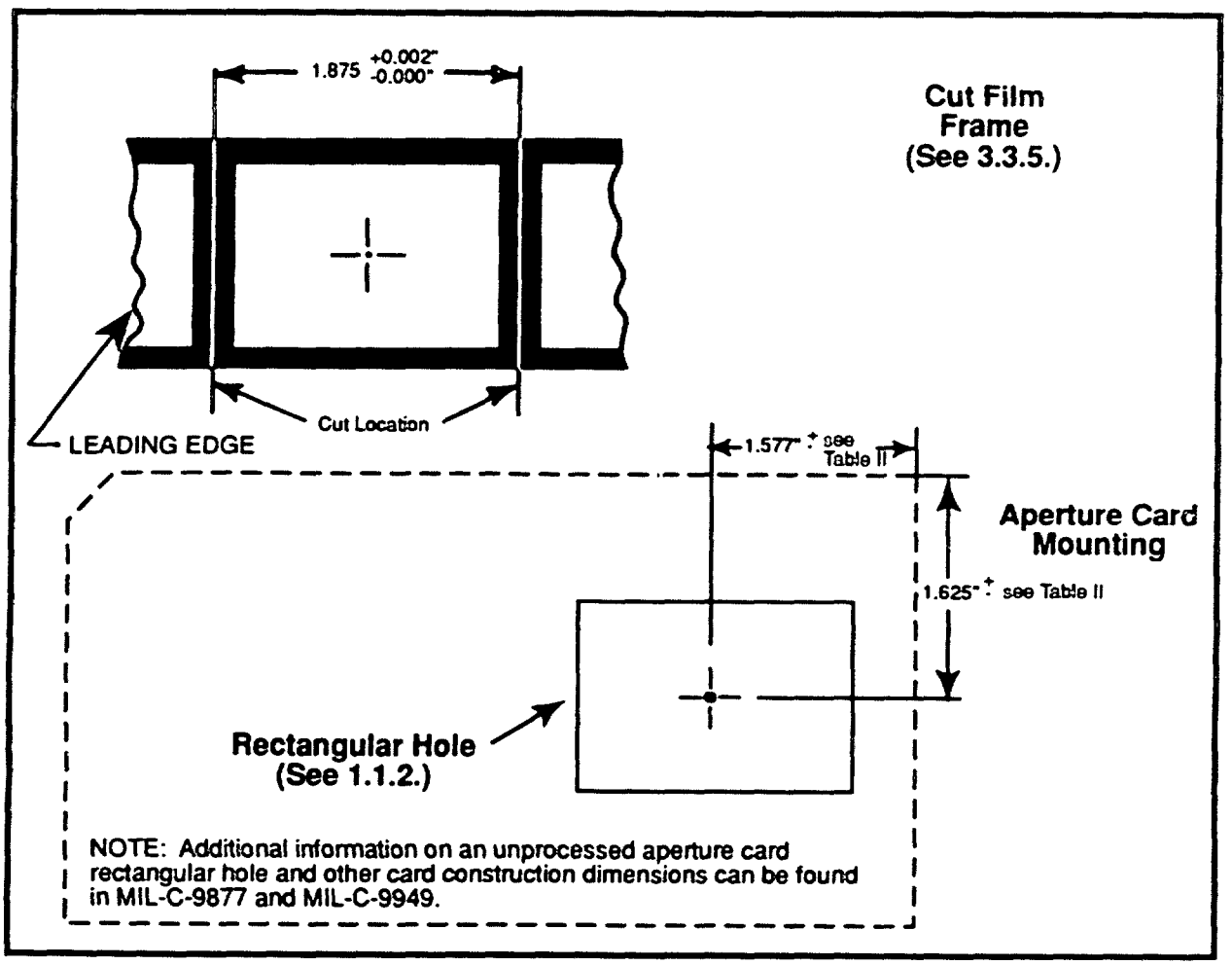

FIGURE 4. Cut film frame and aperture card mounting

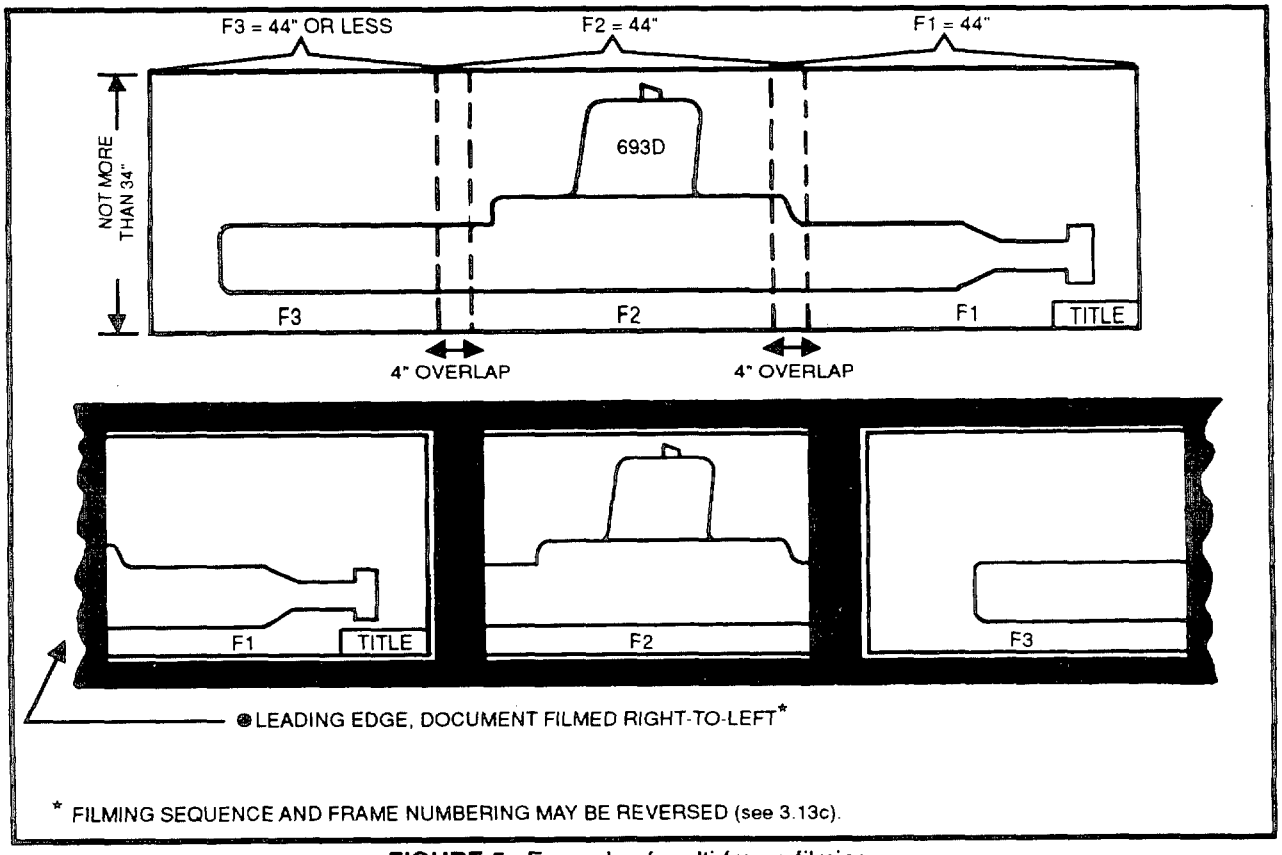

FIGURE 5. Example of multi-frame filming

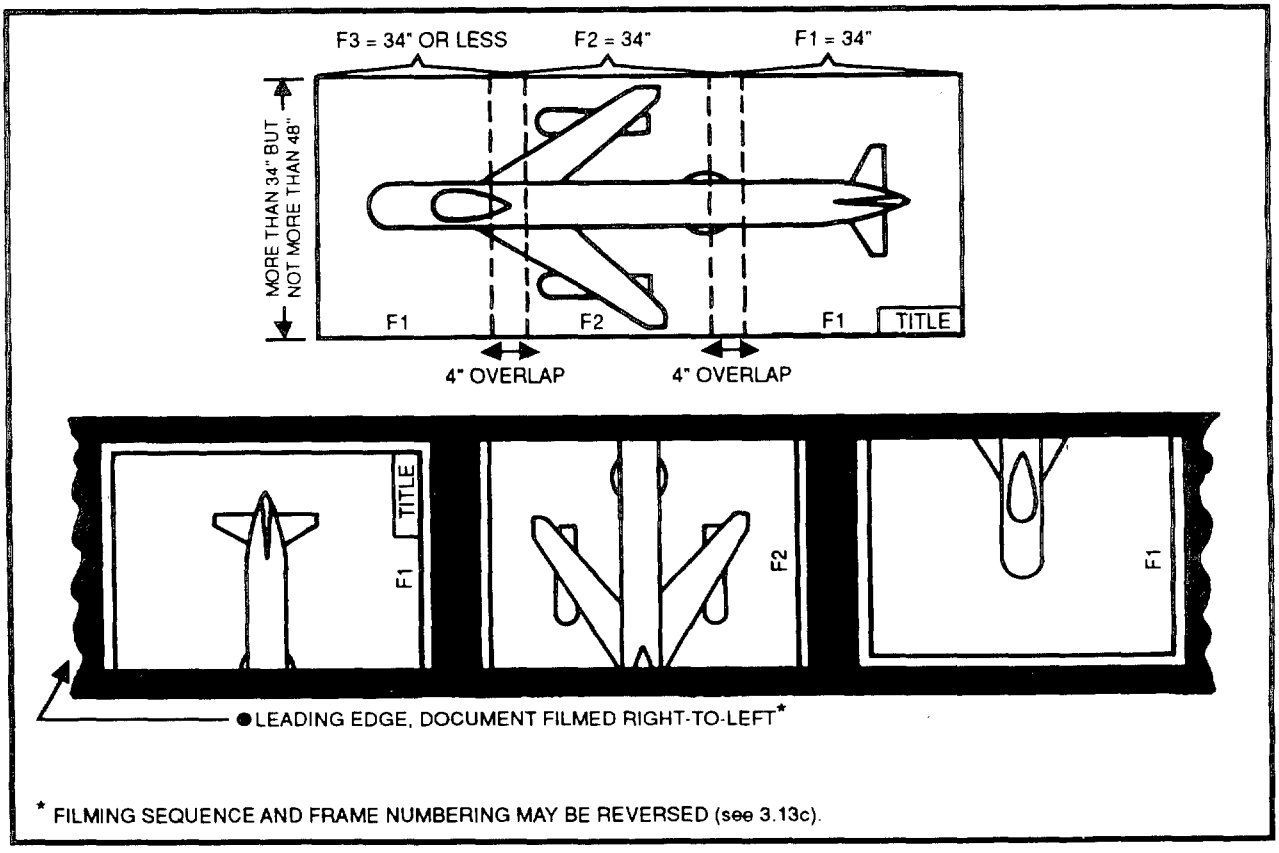

FIGURE 6. Example of multi-frame filming document rotated 90°

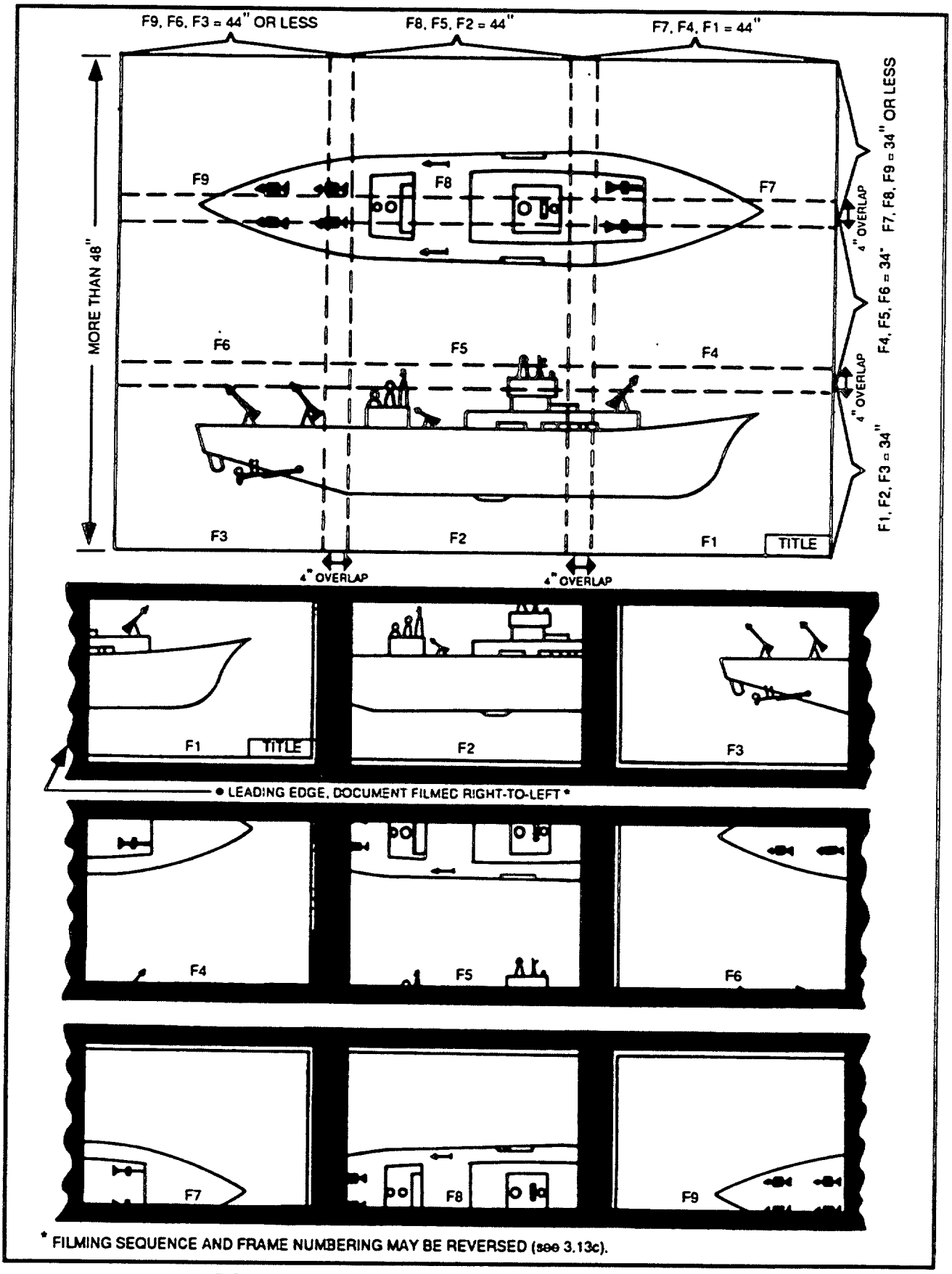

FIGURE 7. Example of multi-frame filming over size document

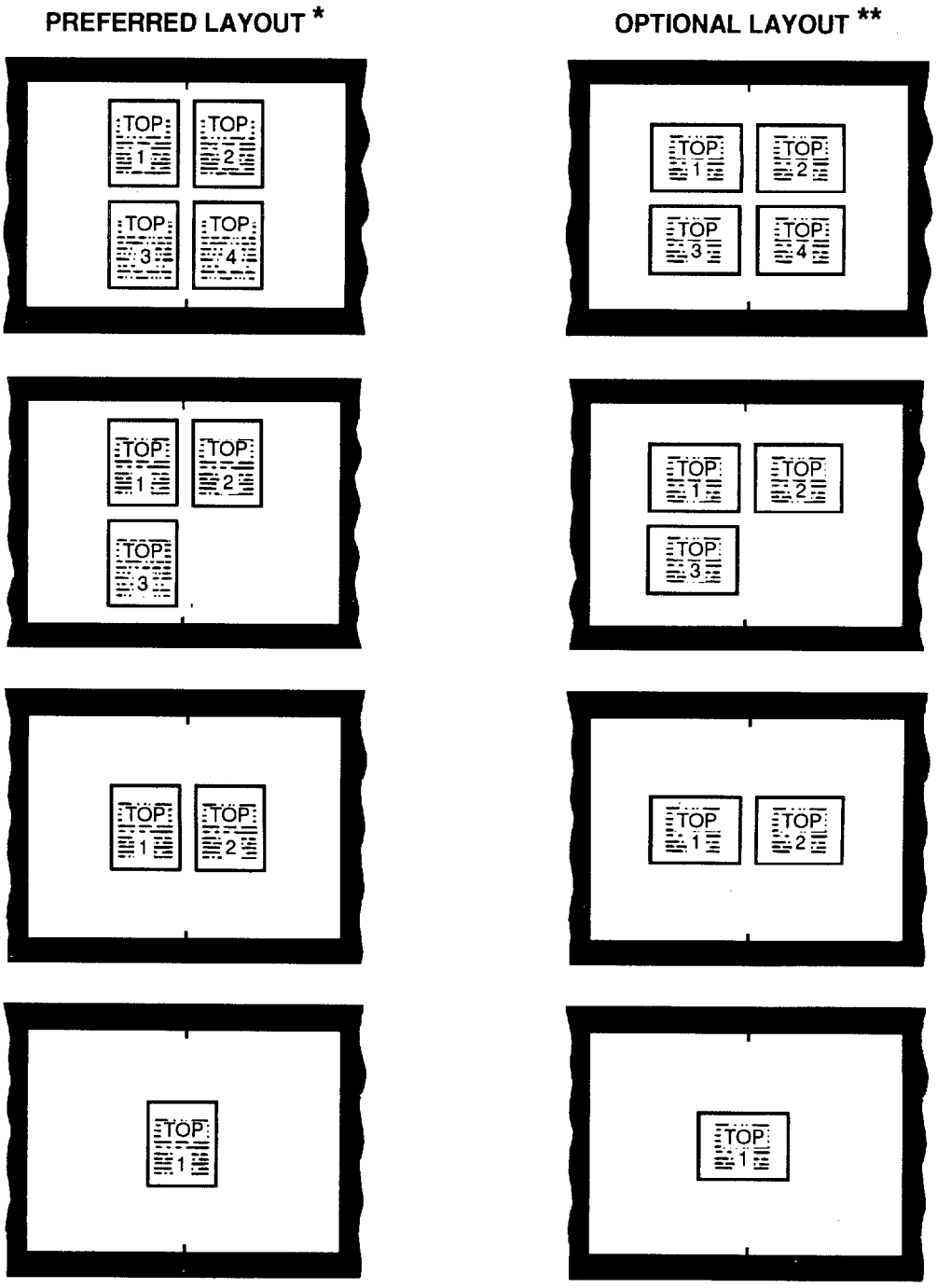

* The preferred layout is commonly expressed as a portrait position.

** The optional layout is commonly expressed as a landscape (90° rotation) position.

NOTE: When filming, do not confuse these layouts with the single sheet per frame positioning required for multi-sheet Size A or Size B drawings (see 3.13a and 3.13b).

FIGURE 8. Book form document positioning

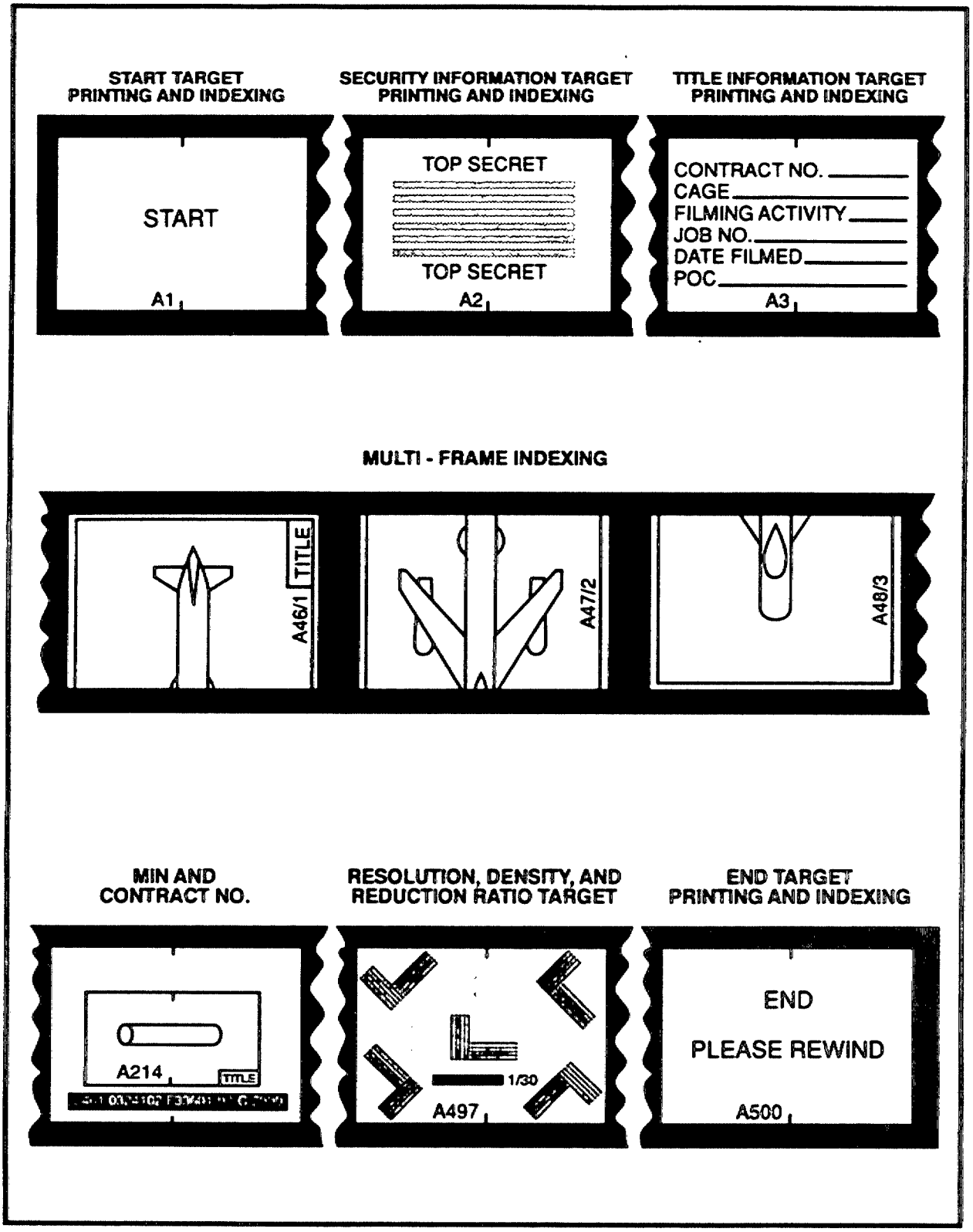

FIGURE 9. Examples of MIN, contract no., indexing, and printing

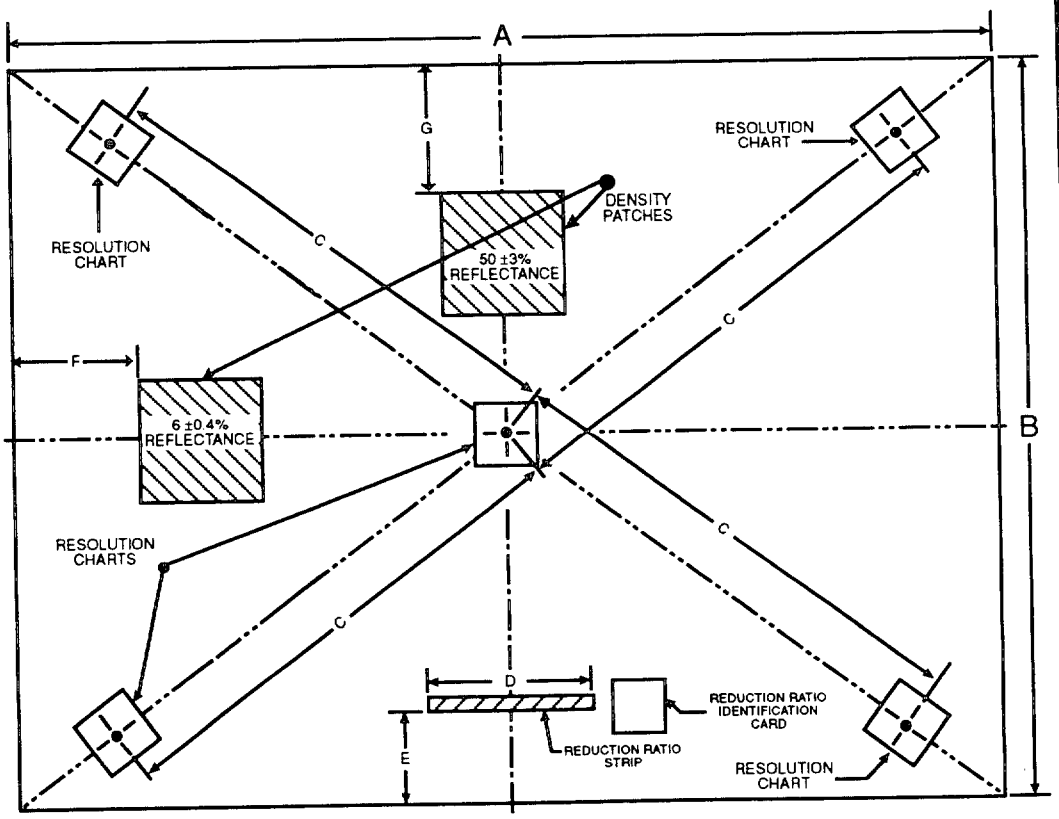

DIMENSION	DIMENSIONS IN INCHES			
	REDUCTION RATIO			TOLERANCE
	1:16	1:24	1:30	
A	26.000	39.000	48.750	± 0.062
B	19.312	28.968	36.210	± 0.062
C	12.875	19.406	24.281	± 0.062
D	8.000	12.000	15.000	± 0.005
E	4.000	6.000	7.500	± 0.062
F	6.400	9.600	12.000	± 0.062
G	4.800	7.200	9.000	± 0.062

NOTE: A strip-up layout for each reduction ration is required (see 3.10.2, 3.10.3, and 3.10.4).

FIGURE 10. Camera copy board layout for the resolution, density, and reduction ratio target

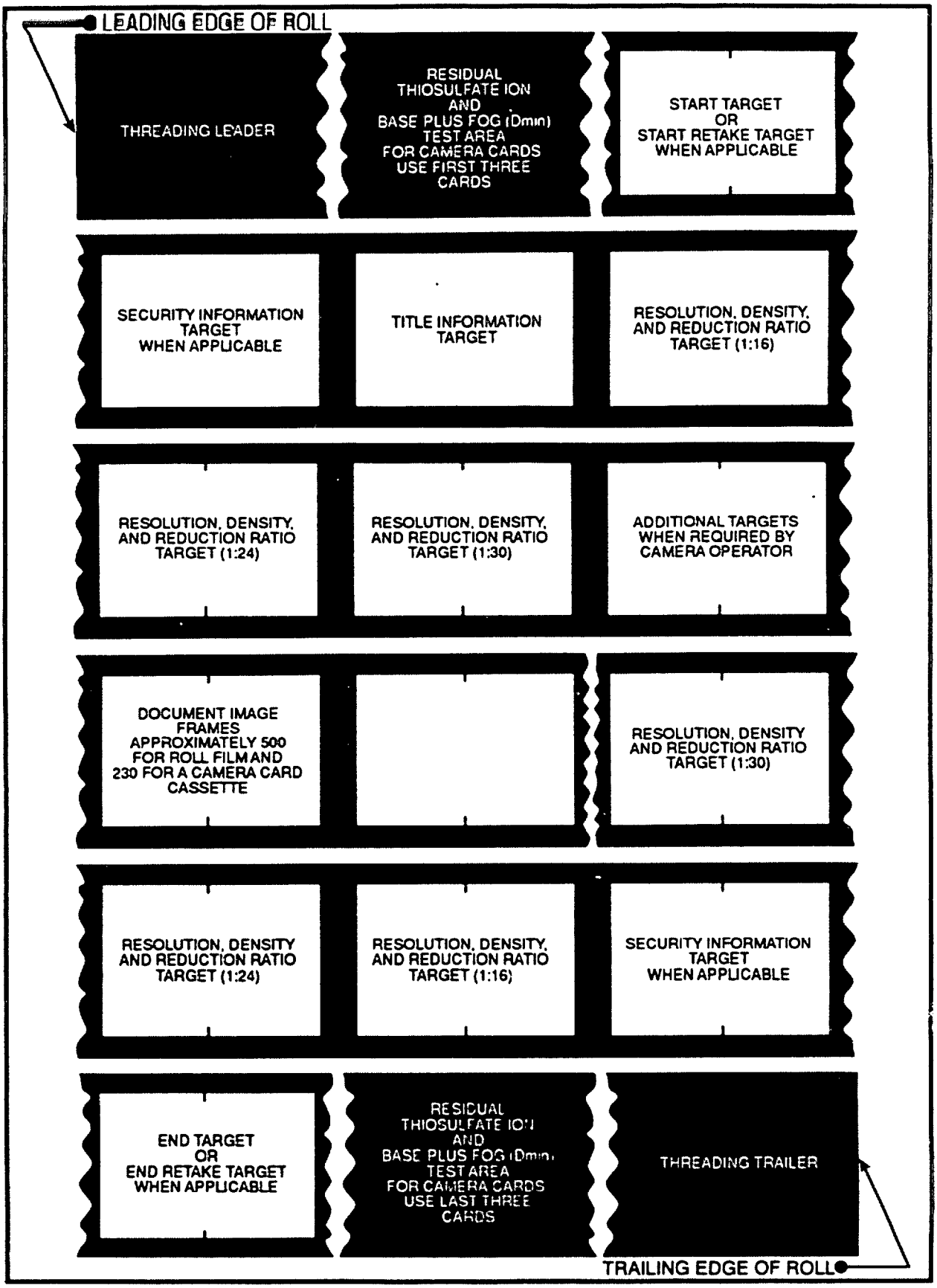

FIGURE 11. Filming (frame) sequence

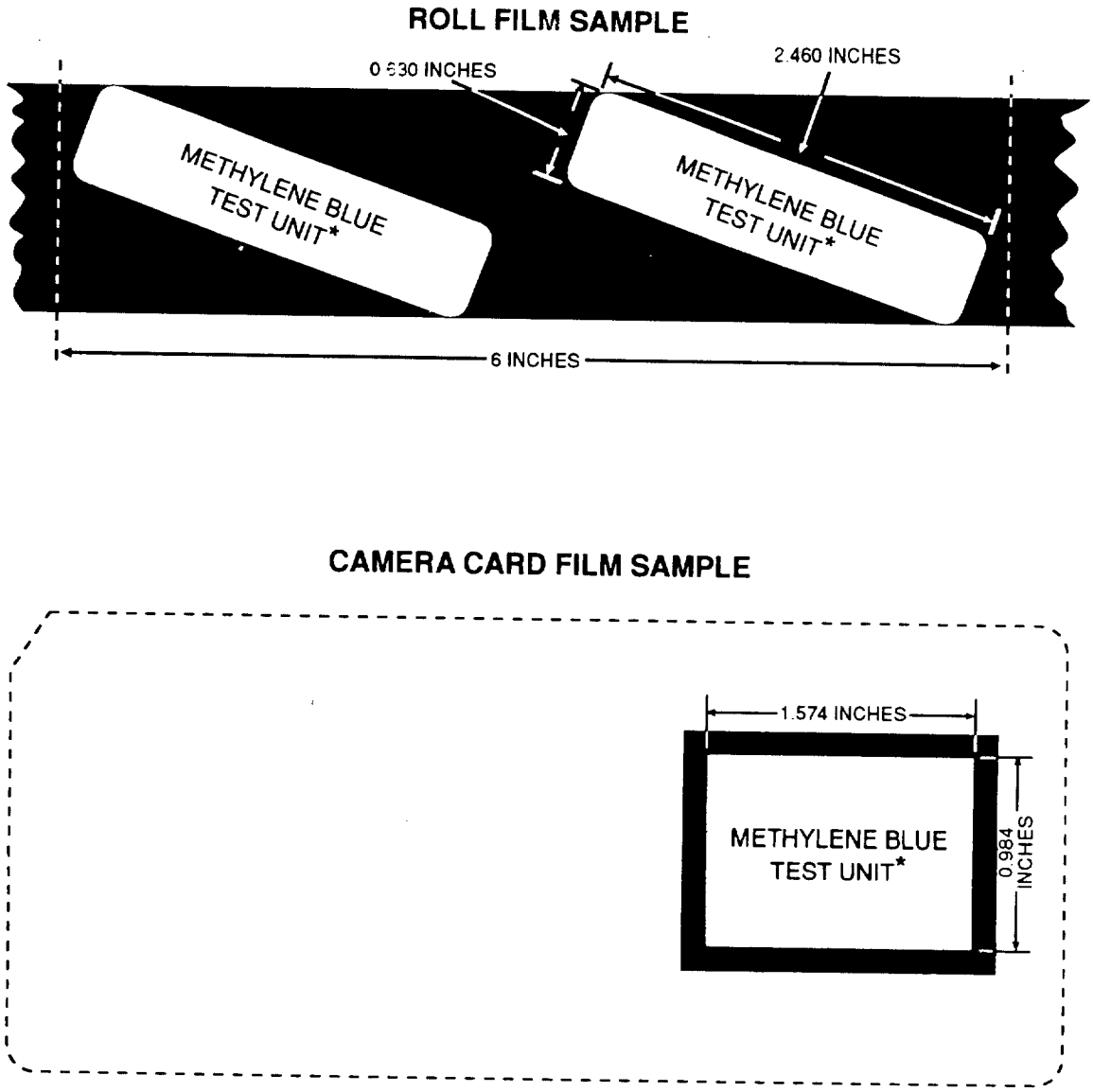

*Appropriate size templates are recommended when cutting the test units.

FIGURE 12. Methylene blue test unit location and dimensions

SUPPLIER CERTIFICATION

I hereby certify that all MIL-M-9868E requirements and any other contractual requirement has been complied with and I also certify that the tests listed below have been performed and the test results comply with all MIL-M-9868E quality assurance provisions.

PURCHASE ORDER _____

SUPPLIER _____ CAGE _____

DATE OF SHIPMENT _____

DoD PRIMARY REPOSITORY DESTINATION _____

MEDIUM: APERTURE (IMAGE) CARD — NUMBER OF CARDS _____

CAMERA (IMAGE) CARD — NUMBER OF CASSETTES _____

CASSETTES _____ thru _____

ROLL FILM — NUMBER OF ROLLS _____

ROLLS _____ thru _____

	1:16	1:24	1:30		
REDUCTION RATIO				FRAME DIMENSIONS	
RESOLUTION *				FILM CURL	
DENSITY (IMAGE FRAMES) *				FRAME MOUNTING	
DENSITY (TARGET FRAMES)*				VISUAL	
DENSITY (D_{MIN}) *				REPRODUCIBILITY	
RESIDUAL THIOSULFATE ION *					

* In lieu of an "XX" entry, for resolution, insert smallest pattern resolved; for density, insert unit density value; for residual thiosulfate ion, insert gm/m^2 value.

NOTE: If any test is waived by the procuring activity, insert "N/A."

SIGNATURE _____ DATE _____

TITLE

FIGURE 13. Supplier certification

CONCLUDING MATERIAL

Custodians:
Air Force - 16
Army - CR
Navy - AS
DLA - GS

Preparing activity:
Air Force - 16

(Project EDRS0149)

Review activities:
Air Force - 11
Army - AR, MI, SC
Navy - SA, SH
DLA - CS

User/Interest activities:
Air Force - 13, 14, 18, 19, 24, 30, 69, 70, 71, 79, 80, 82, 84, 85, 89, 99
Army - AM, AT, AV, EA, ER, GL, IE, ME
Navy - CG, CH, EC, MC, NM, OM, OS, TD, YD
DIA - DI
DLA - DH, ES, IS
DMA - MP
DNA - DS
NASA - NA
NSA - NS
AIIM
ANSI
ASME
NAPM

Civil agency coordinating activity:
COM - NIST

STANDARDIZATION DOCUMENT IMPROVEMENT PROPOSAL

INSTRUCTIONS

1. The preparing activity must complete blocks 1, 2, 3, and 8. In block 1, both the document number and revision letter should be given.
2. The submitter of this form must complete blocks 4, 5, 6, and 7.
3. The preparing activity must provide a reply within 30 days from receipt of the form.

NOTE: This form may not be used to request copies of documents, nor to request waivers, or clarification of requirements on current contracts. Comments submitted on this form do not constitute or imply authorization to waive any portion of the referenced document(s) or to amend contractual requirements.

I RECOMMEND A CHANGE:	1. DOCUMENT NUMBER MIL-M-9868E	2. DOCUMENT DATE (YYMMDD) 930210

3. DOCUMENT TITLE
MICROFILMING OF ENGINEERING DATA, 35mm, REQUIREMENTS FOR

4. NATURE OF CHANGE (Identify paragraph number and include proposed rewrite, if possible. Attach extra sheets as needed.)

5. REASON FOR RECOMMENDATION

6. SUBMITTER

a. NAME (Last, First, Middle Initial)	b. ORGANIZATION	
c. ADDRESS (Include Zip Code)	d. TELEPHONE (Include Area Code) (1) Commercial (2) AUTOVON (If applicable)	7. DATE SUBMITTED (YYMMDD)

8. PREPARING ACTIVITY AF16

a. NAME HQ AFMC/ENC ATTN: Geo. BIACH	b. TELEPHONE (Include Area Code) (1) Commercial (513)427-2295, ext 220 (2) AUTOVON 787-3085 ext 220
c. ADDRESS (Include Zip Code) WRIGHT-PATTERSON AFB OH 45433-5001	IF YOU DO NOT RECEIVE A REPLY WITHIN 45 DAYS, CONTACT: Defense Quality and Standardization Office 5203 Leesburg Pike, Suite 1403, Falls Church, VA 22041-3466 Telephone (703) 756-2340 AUTOVON 289-2340

DD Form 1426, OCT 89 Previous editions are obsolete. 198-290