Downloaded from http://www.everyspec.com

INCH-POUND

MIL-M-3971/1D
14 SEPTEMBER 1992
SUPERSEDING
MIL-M-003971/1C(AR)
22 JANUARY 1992
MIL-M-3971/1B
31 January 1985

MILITARY SPECIFICATION SHEET

METERS, TIME TOTALIZING, NON-HERMETICALLY SEALED, ELECTRICAL· TYPE 1, 10-40V or 40-130V or 10-130V; GRADES A AND B, 2 HOLE AND 3 HOLE FLANGE

This specification is approved for use by all Department and Agencies of the Department of Defense.

The complete requirement for procuring meters described herein shall consist of this document and the issue in effect of MIL-M-3971.

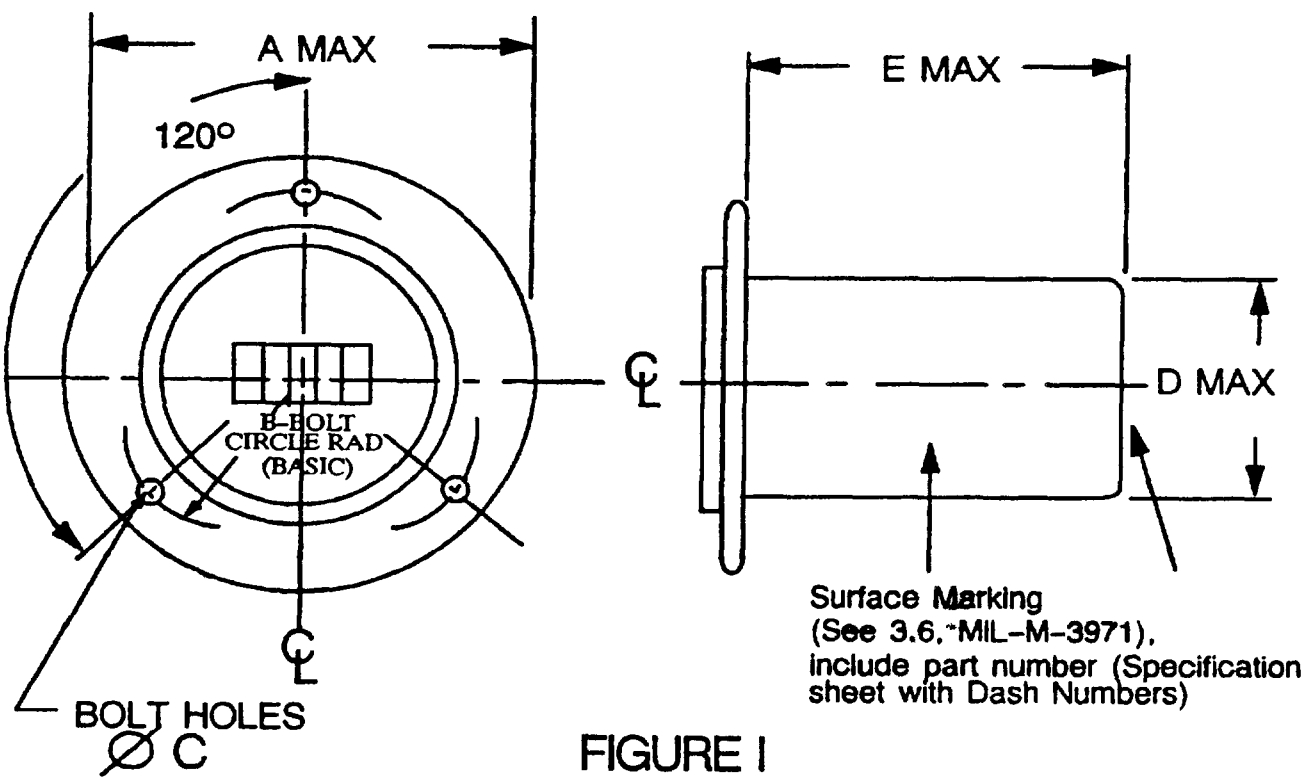

FIGURE I

AMSC N/A

FSC 6645

DISTRIBUTION STATEMENT A. Approved for public release; distribution is unlimited.

Downloaded from http://www.everyspec.com

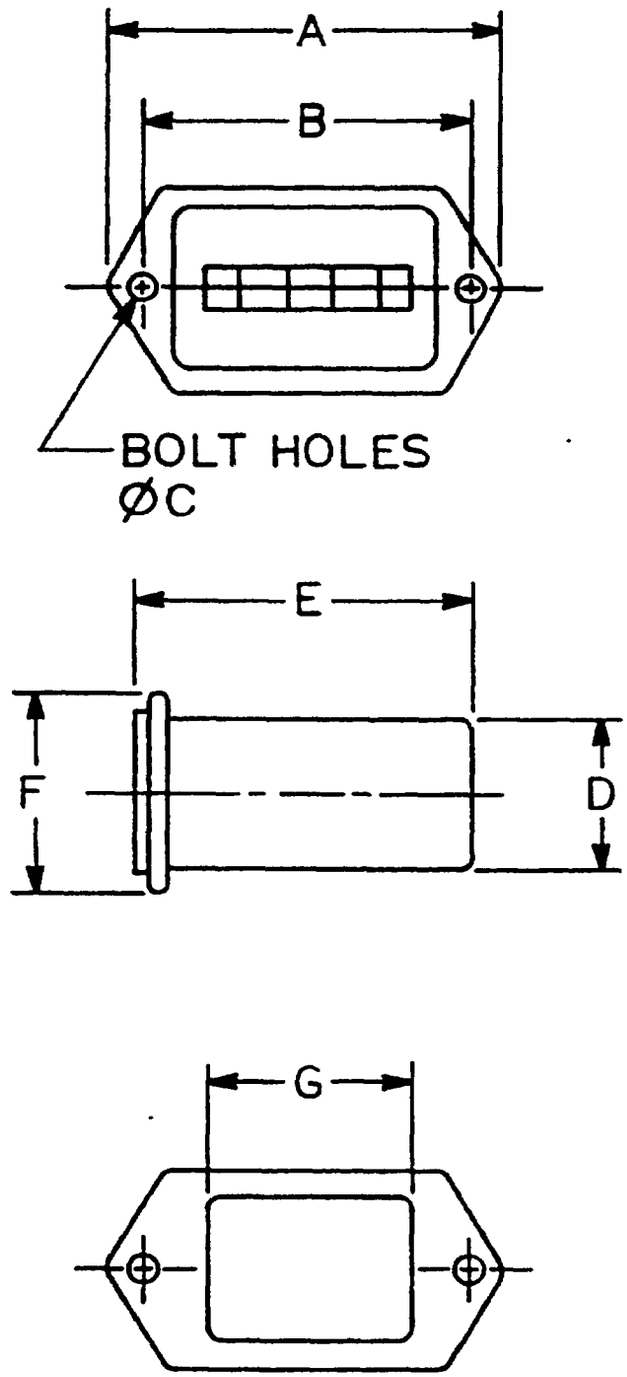

FIGURE 2

Downloaded from http://www.everyspec.com

TABLE I

Dash No.	Fig	A	B	C	D	E	F	G	Grade	Voltage	Range	Readout
1	1	2.875	1.265	.150	2.210	3.00	–	–	A	10–40	10,000	9999.9
2	1	2 875	1.265	.150	2.210	3.00	–	–	A	40–130	10,000	9999.9
3	1	3.500	1.580	.150	2.625	3.00	–	–	A	10–40	10,000	9999.9
4	1	3.500	1.580	.150	2.625	3.00	–	–	A	40–130	10,000	9999.9
5	1	2.875	1.265	.150	2.210	3.00	–	–	B	10–40	10,000	9999.9
6	1	2.875	1.265	.150	2.210	3.00	–	–	B	40–130	10,000	9999.9
7	1	3.500	1.580	.150	2.625	3.00	–	–	B	10–40	10,000	9999.9
8	1	3.500	1.580	.150	2.625	3.00	–	–	B	40–130	10,000	9999.9
9	1	2.810	1.580	.150	2.135	1.75	–	–	B	10–130	10,000	9999.9
10	1	3.500	1.580	.150	2.135	1.75	–	–	B	10–130	10,000	9999.9
11	2	2.12	1.75	.150	.900	1.950	1.25	1.414	A	10–40	10,000	9999 9
12	2	2 12	1.75	.150	.900	1.950	1.25	1.414	B	10–40	10,000	9999.9

NOTES:

1. Dimensions are in inches
2. Tolerances: Dimensional ± 0.015 inches, Bolt Holes ± 005, unless otherwise indicated. Angular ± 0.5°.
3. Range and readout are in hours and tenth of hours.

Downloaded from http://www.everyspec.com

REQUIREMENTS

Dimensions of case: See Figure 1 and 2 and Table I as applicable

Colors, elapsed time indicator:

Hours: White on black background

Tenths: Black on white background

Power consumption: Not applicable

Dielectric strength:	Voltage	- 200 volts rms
	Frequency	- 60 Hz
	Potential	- ac
	Points of application	- Terminals and case

Weight: 0.60 lbs maximum

Starting: 10–40V:
1. Energize with 28V for 60 seconds at +22° (±2°C), de-energize for 180 seconds, repeat 3 times.
2. As above at 12V, repeat 2 times.

40–130V.
1. As above at 120V, repeat 3 times
2. As above at 85V, repeat 2 times.

10–130V:
1. As above at 120V, repeat 3 times.
2. As above at 85V, repeat 2 times.
3. As above at 28V, repeat 3 times.
4. As above at 12V, repeat 2 times

Stopping: Within 120 seconds after being de-energized.

* Power supply tolerance:	10–40 volt-meters	- 1/2 hour at 10 volts
		- 1/2 hour at 40 volts
*	40–130 volt-meters	- 1/2 hour at 40 volts
		- 1/2 hour at 130 volts
*	10–130 volt-meters	- 1/2 hour at 10 volts
		- 1/2 hour at 130 volts

Part number: Consists of the basic number of this specification sheet and a dash number taken from Table I.

NOTE: Terminal configuration should also be specified: Wire lead (blade) or terminal block (stud).

Downloaded from http://www.everyspec.com

Example:

M3971/1-1-S

Basic number

Specification sheet number

Dash number from Table I

B (Blade) or S (Stud) terminal configuration

Supersession data.

MS 16970-1 replaced by M3971/1-(5 or 6)

MS 16970-2 replaced by M3971/1-(7 or 8)

Changes from previous issue. The margins of this specification are marked with asterisks to indicate where changes (additions, modifications, corrections, deletions) from the previous issue were made. This was done as a convenience only and the Government assumes no liability whatsoever for any inaccuracies in these notations Bidders and contractors are cautioned to evaluate the requirements of this document based on the entire content irrespective of the marginal notations and relationship to the last previous issue.

Custodians:

Army - AR

Air Force - 99

Review activities:

Army - ER

Navy - EC

Air Force - 11

DLA - GS

User activities:

Army - ME

Navy - MC, YD

Preparing activity:

Army - AR

(Project 6645-0421)