MIL-M-3935C
18 March 1970
SUPERSEDING
MIL-M-3935B
5 May 1964

MILITARY SPECIFICATION

MARKERS, SELF-LUMINOUS

This specification is mandatory for use by all Departments and Agencies of the Department of Defense.

1. SCOPE

1.1 Scope. This specification covers self-luminous markers.

1.2 Classification. Markers shall be of the following types, as specified:

Type I	- Personnel marker.
Type III	- Vehicle marker.
Type V	- Aircraft exit marker, plate mounted (plain).
Type VI	- Aircraft exit marker, plate mounted (with arrow).
Type VII	- Aircraft exit marker (stud mounted), class A and B.
Type VIII	- Aircraft marker (sign), "EMERGENCY EXIT".

2. APPLICABLE DOCUMENTS

2.1 The following documents of the issue in effect on date of invitation for bids or request for proposal, form a part of this specification to the extent specified herein:

SPECIFICATIONS

Federal

QQ-A-225/1	- Aluminum Alloy 1100, Bar.
QQ-A-250/2b	- Aluminum Alloy 3003, Plate and Sheet.
PPP-B-566	- Boxes, Folding, Paperboard.
PPP-B-636	- Box, Fiberboard.
PPP-C-843	- Cushioning Material, Cellulosic.

Military

MIL-E-5272	- Environmental Testing, Aeronautical and Associated Equipment, General Specification for.

FSC 9905

MIL-A-8625	- Anodic Coatings, for Aluminum and Aluminum Alloys.
MIL-C-13924	- Coating, Oxide, Black, for Ferrous Metals.

STANDARDS

Federal

FED. TEST METHOD STD No. 141	- Paint, Varnish, Lacquer, and Related Materials; Methods of Inspection, Sampling, and Testing.

Military

MIL-STD-105	- Sampling Procedures and Tables for Inspection by Attributes.
MIL-STD-129	- Marking for Shipment and Storage.
MIL-STD-130	- Identification Marking of U. S. Military Property.
MS39098	- Markers, Self-Luminous; Type V - Aircraft Exit Marker Plate Mounted (Plain).
MS39099	- Markers, Self-Luminous; Type VI - Aircraft Exit Marker Plate Mounted (with Arrow).
MS39100	- Markers, Self-Luminous; Type VII - Aircraft Exit Marker, (Stud Mounted) Class A and B.
MS39101	- Markers, Self-Luminous; Type VIII - Aircraft Marker (Sign) "Emergency Exit".

(Copies of specifications and standards required by suppliers in connection with specific procurement functions should be obtained from the procuring activity or as directed by the contracting officer.)

2.2 Other publications. The following documents form a part of this specification to the extent specified herein. Unless otherwise indicated, the issue in effect on date of invitation for bids or request for proposal shall apply.

CODE OF FEDERAL REGULATIONS

Hazardous Materials Regulations of the Department of Transportation. (14 CFR Part 103 and 49 CFR Parts 170-190.)

(Application for copies should be addressed to the Secretary, Hazardous Materials Regulations Board, 400 Sixth Street SW, Washington, D. C. 20590.)

NATIONAL BUREAU OF STANDARDS

Handbook No. 66 - Safe Design and Use of Industrial Beta Ray Sources.

(Application for copies should be addressed to the Superintendent of Documents, Government Printing Office, Washington, D. C. 20402.)

AMERICAN SOCIETY FOR TESTING AND MATERIALS

A177 - Corrosion Resisting Steel.

(Application for copies should be addressed to American Society for Testing and Materials, 1916 Race Street, Philadelphia, Pa. 19103.)

3. REQUIREMENTS

3.1 Description. The markers shall be as shown on the applicable figures and as specified herein. The markers shall be a sealed source, as defined in National Bureau of Standards Handbook No. 66.

3.2 First article.

3.2.1 First produced self-luminous marker. The supplier shall furnish nine self-luminous markers for examination and test within the time frame specified to prove that his production methods will produce self-luminous markers that comply with the requirements of this specification. Examination and tests shall be as specified in section 4 and shall be subject to surveillance and approval by the Government (see 6.4).

3.3 Initial production. When specified, the supplier shall furnish to the Government one or more markers for inspection as specified in 4.4.

3.4 Materials. The materials shall be as specified herein and as shown on the applicable figures and referenced military standards. Materials not specified shall be selected by the supplier and shall be subject to all provisions of this specification.

3.5 Plastics. All plastics used in these sealed sources shall consist of polymethyl methacrylate or other acrylic polymers or copolymers, containing such additions as will enable them to comply with the requirements of this specification. Fabrication of the plastic cell shall be by one of the following: Standard molding, machining, casting, potting or fusing. None of the material used shall be reprocessed. The plastic materials shall give a product which is clear, translucent and colorless.

3.6 Aluminum. Aluminum used for encasing markers shall conform to QQ-A-250/2, temper H-12 or H-22 or QQ-A-225/1, temper H-14. Aluminum shall be anodized in accordance with MIL-A-8625, type optional, class 2, color black.

3.7 Steel. Steel used for encasing mounting and clips shall be corrosion resistant, and shall conform to ASTM designation A177, half hard temper. Steel shall be coated with an oxide coating conforming to MIL-C-13924, class optional.

3.8 Luminous material. The luminous material shall be either a luminous paint or a luminous glass tube. The luminous paint shall consist of a uniform mixture of an excitor, a phosphor and a binder. The luminous glass tube shall consist of an excitor sealed in a phosphor coated tube. Hydrogen 3 or promethium 147 shall be used as a phosphor excitor. When the luminous material is a paint, the excitor shall be bound physically or chemically to the phosphor. The phosphor is to be a dry free flowing powder which emits light with a dominant wave length in the region of 500-600 nanometers (nm) when bombarded by beta radiation. Binder concentration of self-luminous paint shall not be less than 10 percent of the luminous deposit. The components of the self-luminous paint shall be thoroughly and intimately mixed before use. Activity level of the self-luminous paint should not exceed 600 millicuries (mCi) of hydrogen 3 per gram of phosphor or 300 mCi of promethium 147 per gram of phosphor. The amount of excitor used in the markers to attain the required brightness range of effective microlamberts shall not exceed the number of millicuries specified in table I. The supplier shall furnish evidence of compliance that each type of marker does not exceed the number of millicuries specified in table I. The chemical and physical form of the activator (or radioisotope) shall be selected to assure that the luminosity of the luminous markers shall not be less than the limits specified in table II at the end of 3 years.

Table I. Millicuries Per Marker and Initial Luminosity.

Type Marker	Range of Activity Millicuries per Marker				Initial Brightness Values Effective Microlamberts	
	Tritium (H^3)		Promethium (Pm^{147})		Range	
	Min	Max	Min	Max	Min	Max
I	60	200	8	20	12	18
III	230	350	20	40	12	18
V	200	300	25	35	75	100
VI	200	300	25	35	75	100
VII						
Class A	50	150	8	20	35	50
Class B	20	120	5	15	9	12
VIII	1000	4000	50	100	120	200

Table II. Minimum Luminosity (Photopic Microlamberts).

Type Marker	Initial	1 Yr	2 Yr	3 Yr
I	12	11	8	6
III	12	11	8	6
V	75	64	46	35
VI	75	64	46	35
VII				
Class A	35	32	23	17
Class B	9	8	6	4
VIII	120	115	85	64

3.9 Radiological requirements. Luminous materials and techniques of manufacture shall not introduce health hazards in use or storage of the self-luminous markers.

3.9.1 Contamination. When the completed marker is wiped as specified in 4.6.4, the net disintegration rate shall be less than 2200 disintegrations per minute (dpm).

3.9.2 Diffusion. When the completed marker is immersed in water as specified in 4.6.5, not more than 0.1 percent of the original amount of radioactive material shall diffuse into the immersion test water.

3.10 Temperature extremes and altitude. The casing of the markers shall show no evidence of damage and the self-luminous material in the finished marker shall show no evidence of flaking or chipping when the finished marker is tested as specified in 4.6.10.1.

3.11 Vibration. When the finished self-luminous markers are vibrated as specified in 4.6.10.2, the luminous material shall show no evidence of flaking or chipping when examined by ultraviolet light.

3.12 Accelerated weathering. The finished marker, when subjected to accelerated weathering as specified in 4.6.10.3, shall show no evidence of damage to the casing or visual darkening of the phosphor surface.

3.13 Shock. When the finished self-luminous markers are subjected to the shock test specified in 4.6.10.5, there shall be no evidence of damage to the self-luminous markers such as flaking or chipping of the luminous compound and cracking of the plastic.

3.14 Brightness.

3.14.1 Brightness values. The initial brightness of the markers measured at room temperature shall be as specified in table I.

3.14.2 Decrease in brightness. The brightness value shall not be less than the limit specified for each marker in table II when measured 1, 2 and 3 years after the initial determination.

3.15 Solubility. When the applicable self-luminous material is soak tested as specified in 4.6.3, the percent of self-luminous material detected shall not exceed that specified in table III.

Table III. Solubility Percentage

Luminous Material	Percent Detected
Tritium activated powder	3.0
Tritium gas in glass tube	0.1
Promethium activated powder	0.1

3.16 Markings.

3.16.1 Identification markings. The markings shall be identified in accordance with the figures and MIL-STD-130. The name and address of the manufacturer, and the month and year of manufacture, shall be stamped or otherwise permanently marked on the back of the marker.

3.16.2 License and disposition markings.

3.16.2.1 Front. The following information to include the radiation caution symbol (not in color), quantity of isotope, and the byproduct materials license number, shall be incorporated so that it can be legibly seen from the front of the marker.

3.16.2.2 Back. Appropriate control instructions of the using service (see 6.7) shall be incorporated so that they can be legibly seen from the back of the marker.

3.17 Type I personnel marker. Type I markers shall be as shown on figures 1 through 8.

3.17.1 Radiation level. Type I markers containing promethium 147 shall not exceed 0.5 milliroentgens per hour above background when measured in accordance with 4.6.6. (Distance from absorber to surface = 1 cm.)

3.17.2 Waterproofing. The markers shall show no leakage when immersed in 30 inches of water for 24 hours at atmospheric pressure.

3.18 Type III vehicle marker. Type III markers shall be as shown on figures 9 through 13. Bolts and nuts shall be of low carbon, cadmium plated steel, and shall conform to the configuration and dimensions shown in figure 9.

3.18.1 Radiation level. Nonpersonnel markers containing promethium 147 shall not exceed 0.5 milliroentgens per hour above background when measured in accordance with 4.6.6. (Distance from absorber to surfaces = 10 cm.)

3.18.2 Waterproofing. Waterproofing shall be as specified in 3.17.2.

3.19 Type V aircraft exit marker, plate mounted (plain). Type V markers shall be as shown on MS39098, except that the method of construction and material changes will be permitted in order to conform to the complete encapsulation of the luminous source.

3.19.1 Radiation level. Radiation level shall be as specified in 3.18.1.

3.19.2 Waterproofing. The marker shall show no leakage when immersed in 30 inches of water at atmospheric pressure for 24 hours or when pressure is reduced to one inch of mercury.

3.20 Type VI aircraft exit marker, plate mounted (with arrow). Type VI markers shall be as shown on MS39099, except that the method of construction and material changes will be permitted in order to conform to the complete encapsulation of the luminous source.

3.20.1 Radiation level. Radiation level shall be as specified in 3.18.1.

3.20.2 Waterproofing. Waterproofing shall be as specified in 3.19.2.

3.21 Type VII aircraft exit marker (stud mounted).

3.21.1 Class A, area visible to the pilot. Class A markers shall be as shown on MS39100.

3.21.2 Class B, other areas. Class B markers shall be as shown on MS39100.

3.21.3 Radiation level. Radiation level shall be as specified in 3.18.1.

3.21.4 Waterproofing. Waterproofing shall be as specified in 3.19.2.

3.22 Type VIII aircraft markers (sign) "EMERGENCY EXIT". Type VIII markers shall be as shown on MS39101, except that the method of construction and material changes will be permitted in order to conform to the complete encapsulation of the luminous source.

3.22.1 Radiation level. Radiation level shall be as specified in 3.18.1.

3.22.2 Waterproofing. Waterproofing shall be as specified in 3.19.2.

3.23 Workmanship. The metal cases shall have no sharp edges or burrs. All parts and assemblies of the markers including castings, molded parts, stampings and machined surfaces shall be clean and free

from dirt, pits, scale, flux and other harmful extraneous material. All edges shall be rounded or beveled. Plastic material shall not be chipped, cracked or crazed.

4. QUALITY ASSURANCE PROVISIONS

4.1 Responsibility for inspection. Unless otherwise specified in the contract or purchase order, the supplier is responsible for the performance of all inspection requirements as specified herein. Except as otherwise specified in the contract or order, the supplier may use his own or any other facilities suitable for the performance of the inspection requirements specified herein, unless disapproved by the Government. The Government reserves the right to perform any of the inspections set forth in the specification where such inspections are deemed necessary to assure supplies and services conform to prescribed requirements.

4.2 Classification of inspection. Inspection shall be classified as follows:

(a) First-produced item (see 4.3).
(b) Initial production inspection (see 4.4).
(c) Quality conformance inspection (see 4.5).
(d) Inspection comparison (see 4.7).
(e) Inspection of preparation for delivery (see 4.8).

4.3 First-produced item.

4.3.1 Examination. The first-produced marker shall be examined as specified in 4.6.1. Presence of one or more defects shall be cause for rejection.

4.3.2 Tests. The first-produced marker shall be subjected to the tests marked "X" in column 1 of table IV. Failure of any test shall be cause for rejection.

4.4 Initial production inspection. When specified (see 3.3), one or more initial production markers will be selected at random by the Government from the first 100 vehicle or aircraft markers or the first 500 personnel markers being produced from production tooling and will be examined as specified in 4.6.1 and subjected to the tests marked "X" in column 2 of table IV to determine conformance to the requirements of this specification. The inspection will be performed by the Government at a site selected by the Government. Acceptance of an initial production marker shall not exclude the remaining markers from the quality conformance inspection and acceptance provisions specified in section 4.

4.4.1 Inspection failure. Failure of an initial production marker to meet any requirement specified herein during and as a result of the examination and tests specified in 4.4 shall be cause for rejection of the initial production markers and shall be cause for refusal by the Government to continue acceptance of production markers until evidence has been provided by the supplier that corrective action has been taken to eliminate the deficiencies. Correction of such deficiencies shall be accomplished by the supplier at no cost to the Government on markers previously accepted and produced under the contract. Any deficiencies found as a result of the initial production inspection will be considered prima facie evidence that all markers accepted prior to the completion of initial production inspection are similarly deficient unless evidence to the contrary is furnished by the supplier and such evidence is acceptable to the contracting officer.

4.5 Quality conformance inspection.

4.5.1 Sampling. Sampling for examination and tests shall be in accordance with MIL-STD-105.

4.5.2 Individual examination. Each marker shall be examined under ultraviolet light for chipping or flaking of the luminous material or protective covering. Any evidence of chipping or flaking shall be cause for rejection of that marker only.

4.5.3 Examination. Samples selected in accordance with 4.5.1 shall be examined as specified in 4.6.1. AQL shall be 1.0 percent defective.

4.5.4 Tests. Samples selected in accordance with 4.5.1 shall be tested as specified in column 3 of table IV. AQL shall be 1.0 percent defective.

4.6 Inspection procedure.

4.6.1 Examination. The markers shall be examined for the following defects:

101. Markers not a sealed source.
102. Not a complete casting or encapsulation.
103. Base material not mounted in molded plastics.
104. Luminous material not on base material.
105. Luminous area not of uniform brightness.
106. Luminous material chipped or flaked.
107. Materials not as specified.
108. Materials not finished as specified.

109. Markings missing, incomplete, incorrect, not as specified.
110. Dimensions not within specified tolerances shown in the figures and military standards.
111. Workmanship not as specified.

4.6.2 Tests.

4.6.2.1 Test conditions.

4.6.2.2 Test schedule. Tests shall be in accordance with table IV.

Table IV. Test Schedule

First Produced	Initial Production	Quality Conformance	Test	Test Para.	Req. Para.
1	2	3	4	5	6
			Tests A		
X	X	X	Brightness	4.6.8	3.14
X	X	-	Decrease of brightness upon aging.	4.6.9	3.14.3
X	X	X	Fluorescent color.	4.6.7	3.8
X	X	X	Radiation level (Type I).	4.6.6	3.17.1
X	X	X	Radiation level Types III, V-VIII.	4.6.6	3.18.1
X	X	X	Radiological contamination.	4.6.4	3.9.1
X	X	X	Vibration.	4.6.10.2	3.11
X	X	X	Solubility.	4.6.3	3.15
X	X	X	Diffusion.	4.6.5	3.9.2
			Tests B		
X	X	-	Temperature extremes and altitude.	4.6.10.1	3.10
X	X	-	Accelerated weathering.	4.6.10.3	3.12
X	X	-	Shock.	4.6.10.5	3.13
X	X	-	Waterproofing, Type I, III.	4.6.10.4	3.17.2
X	X	-	Waterproofing, Type V, VIII.	4.6.10.4	3.19.2

4.6.3 Solubility tests of luminous materials.

4.6.3.1 Self-luminous material. Lots of tritium activated self-luminous powder (without binder and protective coating) shall not exceed 500 grams in size and shall be compounded 30 to 35 days prior to testing. Select 5 to 15 milligram samples of powder (in duplicate) from each lot. Submerge the samples in 100 ml of water at 20° C. plus or minus 5° C. for not less than 24 hours. Aliquots of the aqueous solution shall be counted by liquid scintillation techniques. Presence of more than 3 percent of the total activity of a powder sample in the aqueous phase shall constitute failure of this test. No attempts for recovery shall be made for rejected lots. Reports of the powder soak test shall be submitted by the manufacturer. These tests shall be witnessed and documented by the local Government Inspector.

4.6.3.2 Components containing tritium gas. Six of each lot of the tritium gas filled tubes to be used in the markers shall be submerged in 100 ml of water at 20° C. plus or minus 5° C. for a period of 24 hours. Aliquots of the aqueous solution shall be counted by liquid scintillation techniques or any other sensitive method. Not more than 0.1 percent of the total tritium activity in the sample tubes shall be detected in the sample water. Lots exceeding 0.1 percent of the total tritium activity shall be rejected.

4.6.3.3 Material containing promethium. All promethium activated self-luminous powder shall be soak tested 30-35 days after compounding. Acceptable powder lots shall be used to paint marker components within 40 days after testing. Two samples of powder weighing 10 to 30 milligrams from each lot (lot size not to exceed 500 grams) shall be submerged in 100 ml of water and 100 ml of 0.1 normal HCl at 25° C. plus or minus 5° C. for 24 hours. Aliquots of the sample solutions shall be counted by liquid scintillation techniques or any other equally sensitive method. Not more than 0.1 percent of the total promethium activity in the powder sample shall be detected in the total sample solution. Powder lots exceeding 0.1 percent shall be rejected without attempts at recovery for use on the markers.

4.6.4 Contamination. A piece of Whatman 50 filter paper, or equivalent, moistened with water shall be used. All portions of the outside surfaces of the completed markers shall be thoroughly wiped with the filter paper by the scrubbing action of the rubber gloved hand. The filter paper will be counted by liquid scintillation techniques or any other equally sensitive method. Net disintegration rates greater than 2200 disintegrations per minute shall constitute failure of this test.

4.6.5 Diffusion. The finished marker shall be submerged in 300 ml of water at 20° C. for a period of 24 hours. The water sample shall be analyzed for its radioactive content by liquid scintillation counting or any other equally sensitive method. The results shall be reported numerically to the nearest 0.1 microcurie. A radioactive content of more than .1 percent of the excitor in the marker found in the sample water shall constitute failure of this test.

4.6.6 Radiation level. The radiation level at surfaces of individual markers containing promethium 147 shall be measured with a Geiger-Mueller-type survey meter using a probe with an end mica absorber of not less than 0.7 or more than 2 mg/cm^2 thickness. Nuclear-Chicago Model No. 2612 has been found acceptable for measuring the radiation levels specified herein. The absorbers shall be placed within 1 cm or 10 cm (see 3.17.1 and 3.18.1) of the surfaces. The meter shall be calibrated against a known source of radiation. The test shall be performed in an area in which the background radiation is less than 0.4 milliroentgens per hour. The results shall be reported numerically to the nearest 0.1 milliroentgen per hour above background. Noncompliance with 3.17.1 or 3.18.1, as appropriate, shall constitute failure of this test.

4.6.7 Fluorescent color. The markers shall be compared visually with source and filter combinations yielding the dominant wave lengths. When filter-source combinations are too bright to permit convenient matching, a neutral filter may be used. Evidence of dominant fluorescent color values not within 500-600 nanometers specified in 3.8 shall constitute failure of this test.

4.6.8 Brightness. The brightness shall be determined by either the comparison method or the photopic photometer method as described in 4.6.8.1 and 4.6.8.2. The results shall be reported numerically to the nearest microlambert.

4.6.8.1 Comparison method. The brightness values of the markers shall be determined by a comparison method using photoelectrical photometry. The markers shall be compared for brightness with factory standard markers. The factory standard markers shall have the same spectral distribution as the markers and the luminosity shall have been measured by photopic photometry at a Government laboratory or Government-approved testing facility within 6 months. Prior to the measurement of any markers, the photoelectric photometer shall be calibrated with a factory standard marker in a darkroom. The meter deflections corresponding to minimum and maximum brightness values specified in table I shall be calculated. The markers shall not be exposed to any light during the brightness comparison test or during the 24 hours preceding the test. Evidence

of initial brightness values not within the limits specified in table I shall constitute failure of this test.

4.6.8.2 Photopic photometry method. The brightness values of the markers shall be measured with a photoelectric photometer which has the spectral response of a photopic eye for a standard observer. This is defined by the relative photopic values adopted by the International Commission on Illumination (C.I.E) in 1931. Calibration of the photometer shall be by means of a calibrated standard lamp and an opal glass diffuser. Prior to the measurement of any markers, the photometer shall be calibrated in a darkroom. The meter deflections corresponding to minimum and maximum brightness values specified in table I shall be calculated. The markers shall not be exposed to any light during the brightness measurement or during the 24 hours preceding the test. Evidence of initial brightness values not within the limits specified in table I shall constitute failure of this test.

4.6.9 Decrease of brightness. The brightness of markers shall be measured at the end of 1, 2, and 3 years after the initial brightness measurement. Brightness values which fall below the corresponding values given in table II shall constitute failure of this test.

4.6.10 Environmental tests.

4.6.10.1 Temperature extremes and altitude. Markers shall be subjected to the temperature and altitude tests in accordance with MIL-E-5272; procedure I for low temperature test, procedure II for the high temperature test, and procedure VI, condition D for the altitude test.

4.6.10.2 Vibration. The marker shall be attached to a vibration device and vibrated at 26 cycles per second and a vibration acceleration of twice the acceleration of gravity for 1 hour. Evidence of chipping or flaking of the self luminous material, when examined by ultraviolet light, shall constitute failure of this test.

4.6.10.3 Accelerated weathering. Markers shall be subjected to 100 hours of accelerated weathering in accordance with FED. TEST METHOD STD. No. 141, method 6151. The maximum temperature of 150° F. shall not be exceeded during the test.

4.6.10.4 Waterproofing.

4.6.10.4.1 Waterproofing, type I and type III. The markers shall be immersed in 30 inches of water for 24 hours. Some leakage may be evident between the crimped aluminum case and the plastic cell encapsulation.

4.6.10.4.2 Waterproofing, type V, VII and VIII. The markers shall be immersed in 30 inches of water for 24 hours. Some leakage may be evident between the crimped aluminum case and the encapsulated plastic cell. The pressure of the air above the water shall then be reduced to 1 inch of mercury absolute pressure. The lowered pressure shall be maintained for 1 minute or until air bubbles cease to be given off by the water, whichever is the longer time. The pressure shall then be increased to normal atmospheric pressure.

4.6.10.4.3 Rejection criteria. The following shall constitute failure of these tests:

(a) Evidence of water entering the air space between the luminous disk and surface mount.
(b) Water leakage within the luminous area.

4.6.10.5 Shock. The markers shall be subjected to the shock test as specified in NBS Handbook No. 66. Any evidence of damage, cracking of the luminous coating or the plastic, or flaking of the self-luminous material shall constitute failure of this test.

4.7 Inspection comparison. The Government may select markers at any time during the contract production period and subject these markers to the examination and tests specified in 4.4, to determine that the quality of the selected markers is equal to the quality standards established during initial production inspection. The inspection will be performed by the Government at a site selected by the Government. Markers will be selected at random from those which have been accepted by the Government and will not include the previously inspected initial production markers.

4.8 Inspection of preparation for delivery. The packaging, packing and marking shall be examined to determine compliance with the requirements and referenced documents in section 5 of this specification. Any one defect shall be cause for rejection.

5. PREPARATION FOR DELIVERY

Note. The requirements for the packaging and marking of markers shall conform with the Hazardous Materials Regulations of Department of Transportation (14 CFR Part 103 and 49 CFR Parts 170-190). When a conflict exists over the quantity of markers to be packaged and packed together the quantities specified shall be reduced accordingly to conform with the Regulations.

5.1 Packaging. Packaging shall be level A or C as specified.

5.1.1 Level A. Markers of like description shall be packaged together in quantities of ten, in a close-fitting box conforming to PPP-B-566, variety 1, style VII. Each marker shall be cushioned within the box in a manner to prevent the markers from contacting the interior of the box and from striking each other, using cushioning material conforming to PPP-C-843, type II, class A.

5.1.1.1 Consolidated packaging. Markers packaged as specified in 5.1.1 shall be consolidated packaged together in quantities of ten in a close-fitting box conforming to PPP-B-636, W6c, style optional. The box shall be waterproofed as specified for waterproofing of slotted style boxes in accordance with the appendix to the box specification.

5.1.2 Level C. The markers shall be packaged and consolidated packaged as specified in 5.1.1 and 5.1.1.1 except the boxes for consolidated packaging shall conform to PPP-B-636, type CF, class domestic, variety SW, grade 125, style optional. When specified, the markers shall be packaged in accordance with the supplier's standard practice.

5.2 Packing. Packing shall be level A or C as specified.

5.2.1 Level A. The boxes of consolidated packaged markers shall be packed together in boxes conforming to PPP-B-601, overseas type, style optional.

5.2.2 Level C. The markers shall be packed in a manner which will insure arrival at destination in satisfactory condition and be acceptable to the carrier at lowest rates. Containers and packing shall comply with Uniform Freight Classification rules or National Motor Freight Classification rules.

5.3 Marking. In addition to any marking required by the regulations, marking for shipment and storage shall be in accordance with MIL-STD-129.

6. NOTES

6.1 Intended use. Type I markers are for use on personnel and type III markers for use on vehicles, bridge abutments, and other military markings. Type V, VI, VII and VIII markers are intended for installation in aircraft; with types VII, class B for use in the area visible to the pilots and type VII, class A in other areas.

6.2 Ordering data. Procurement documents should specify the following:

(a) Title, number and date of this specification.
(b) Type of marker required (see 1.2).
(c) Time frame required for submission of first-produced marker (see 3.2.1).
(d) When initial production inspection is required and number of markers to be furnished (see 3.3).
(e) If evidence of compliance is not acceptable for the decrease in brightness after the 3 year requirement (see 4.6.9).
(f) Level of packaging and level of packing required (see 5.1 and 5.2).
(g) When the supplier's standard practice is specified.

6.3 The contracting officer reserves the right to reject any bidder who cannot obtain a license from the Atomic Energy Commission.

6.4 First-produced markers. Any changes or deviations of production markers from the approved first-produced marker during production will be subject to the approval of the contracting officer. Approval of the first-produced marker will not relieve the supplier of his obligation to furnish markers conforming to this specification.

6.5 Supplemental information may be found in the Manual on Packaging and Handling of Dangerous Materials for Transportation by Military Aircraft, Army Number TM 38-250; Navy Number NAVEXOS-P-938; Air Force Number AFM 71-1.

6.6 The contracting officer shall furnish to the supplier the number or numbers of the licenses issued by the Atomic Energy Commission to the using service and the reference number of the Service Manuals or Technical Orders to be used in the markings (see 3.16 and 5.3).

6.7 Control instructions shall be obtained from the using service and furnished to the supplier.

Custodians:

Army - ME
Navy - YD
Air Force - 82

Review activities:

Army - GL, MD

Preparing activity:

Army - ME

Project No. 9905-0117

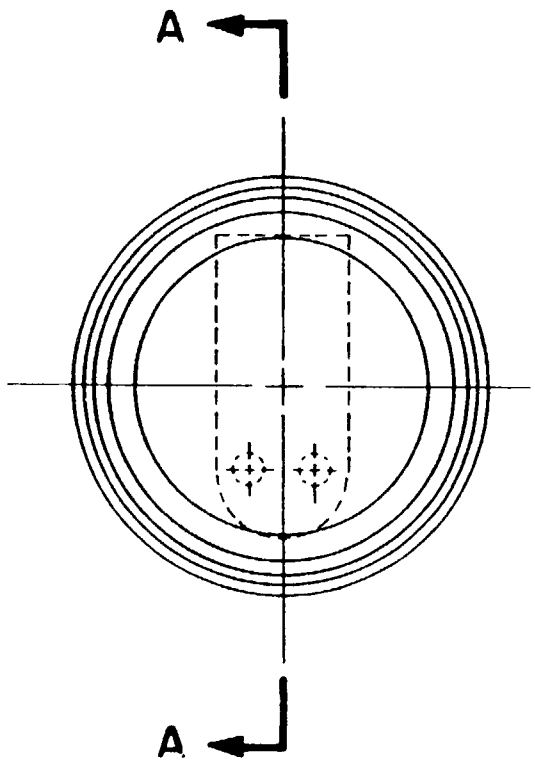

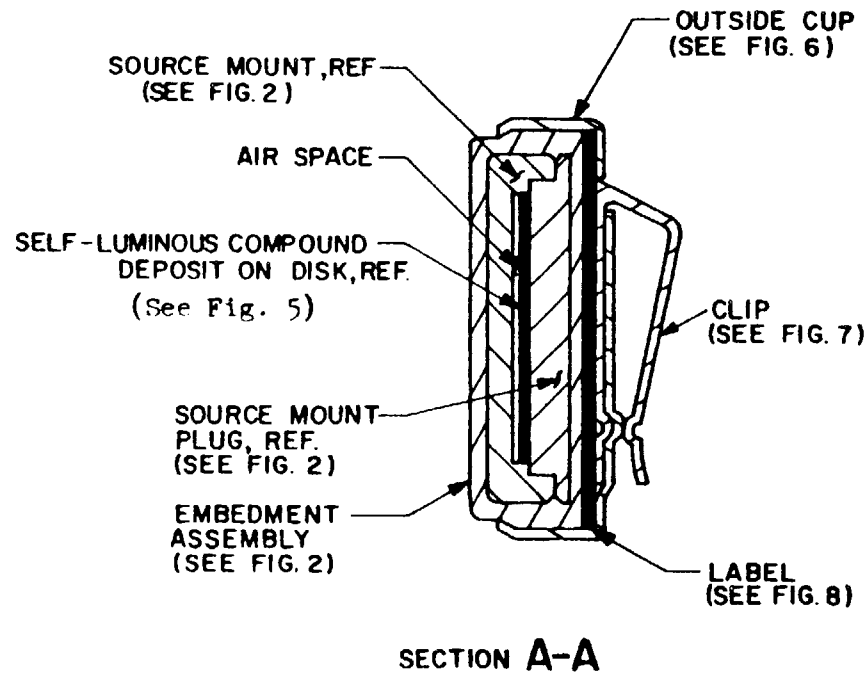

FIGURE I. TYPE I, PERSONNEL MARKER, ASSEMBLY.

CX-1038A

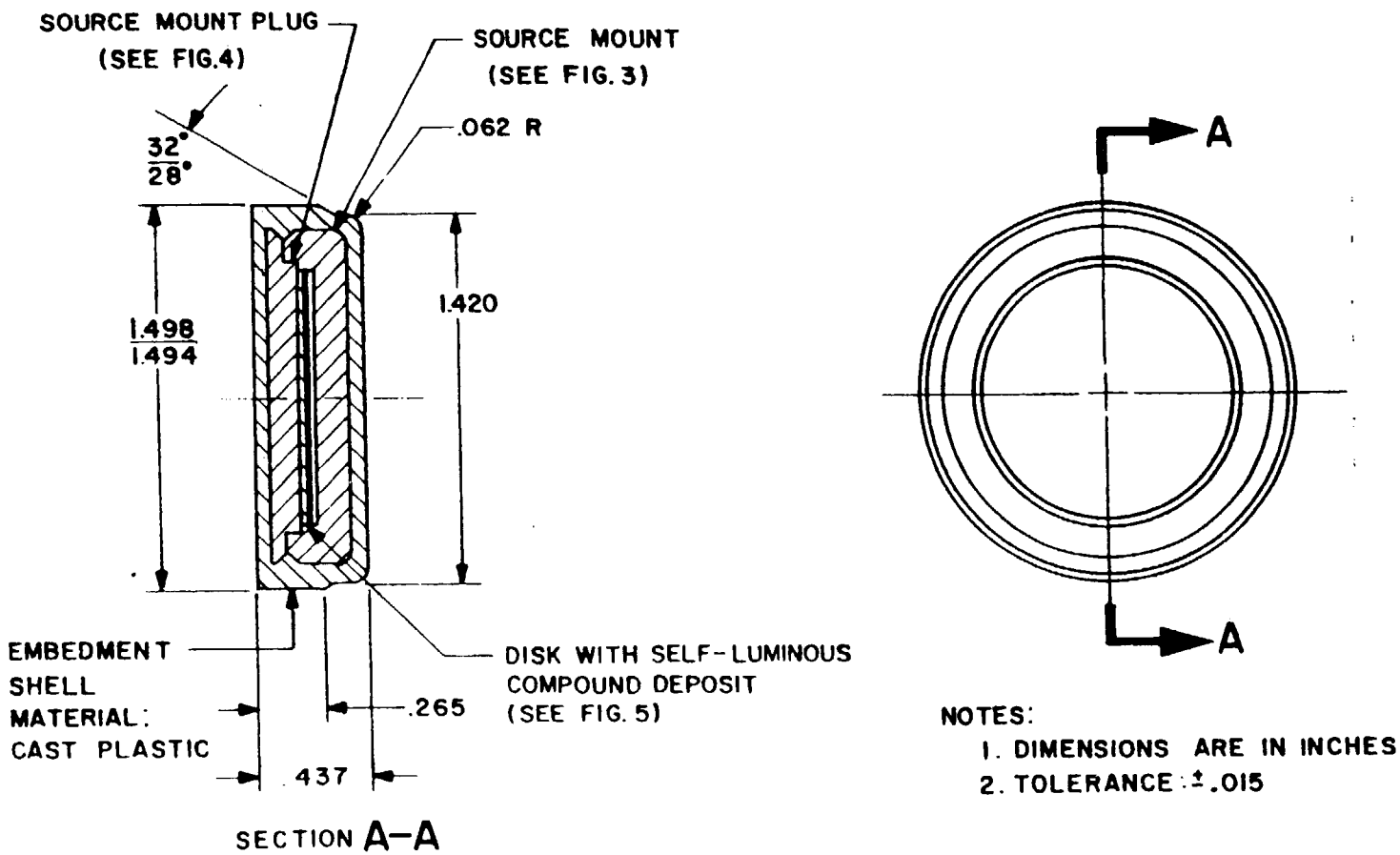

FIGURE 2. TYPE I, PERSONNEL MARKER, EMBEDMENT ASSEMBLY

CX-1039A

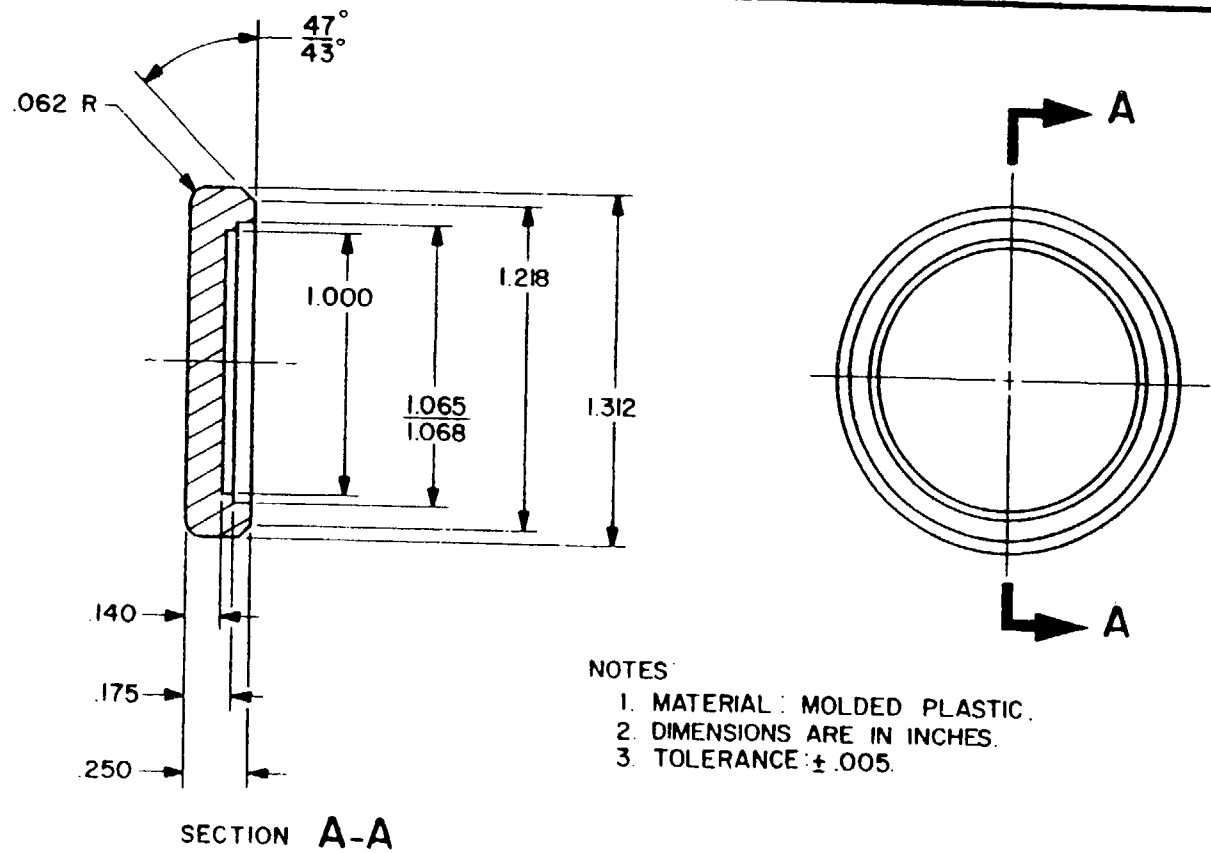

NOTES:
1. MATERIAL: MOLDED PLASTIC.
2. DIMENSIONS ARE IN INCHES.
3. TOLERANCE: ± .005.

FIGURE 3. TYPE I, PERSONNEL MARKER, SOURCE MOUNT

CX-1040

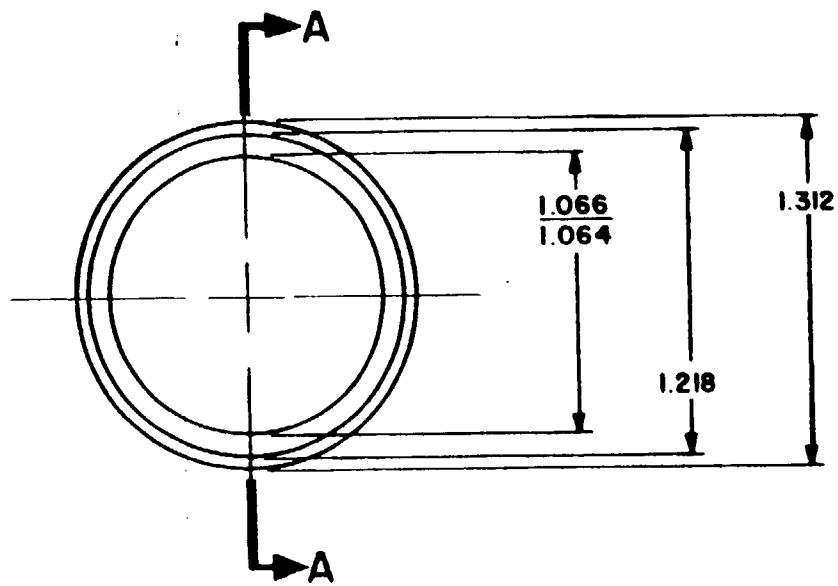

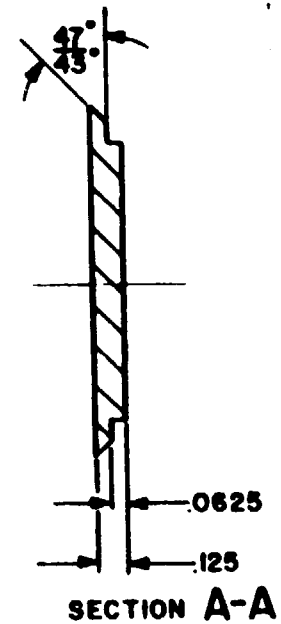

NOTES:

1. DIMENSIONS ARE IN INCHES
2. MATERIAL: MOLDED PLASTIC
3. TOLERANCE: ±.005

FIGURE 4. TYPE I, PERSONNEL MARKER, SOURCE MOUNT PLUG.

CX-1041

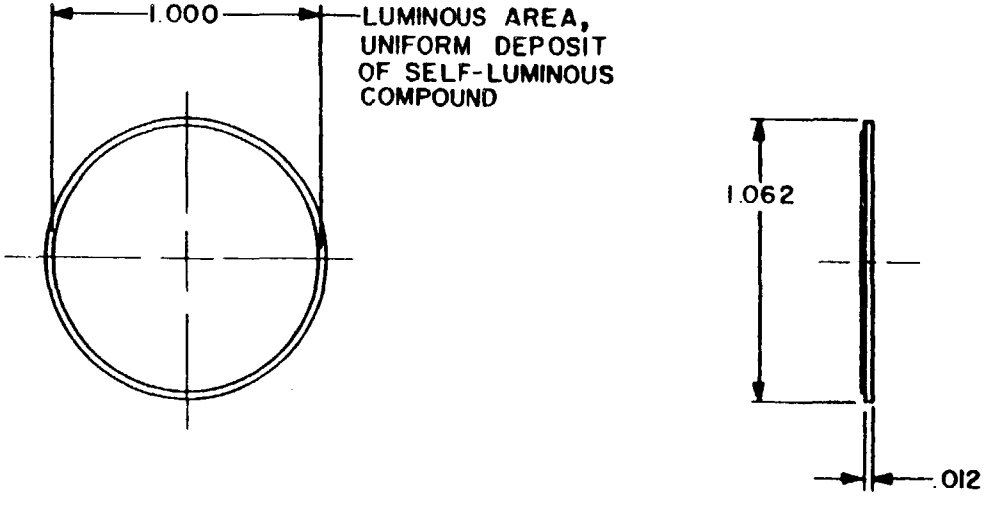

NOTES:

1. DIMENSIONS ARE IN INCHES
2. MATERIAL: ALUMINUM OR ACCEPTABLE MATERIAL
3. TOLERANCE: ± .002

FIGURE 5. TYPE I, PERSONNEL MARKER, DISK WITH SELF-LUMINOUS COMPOUND DEPOSIT.

CX-1042A

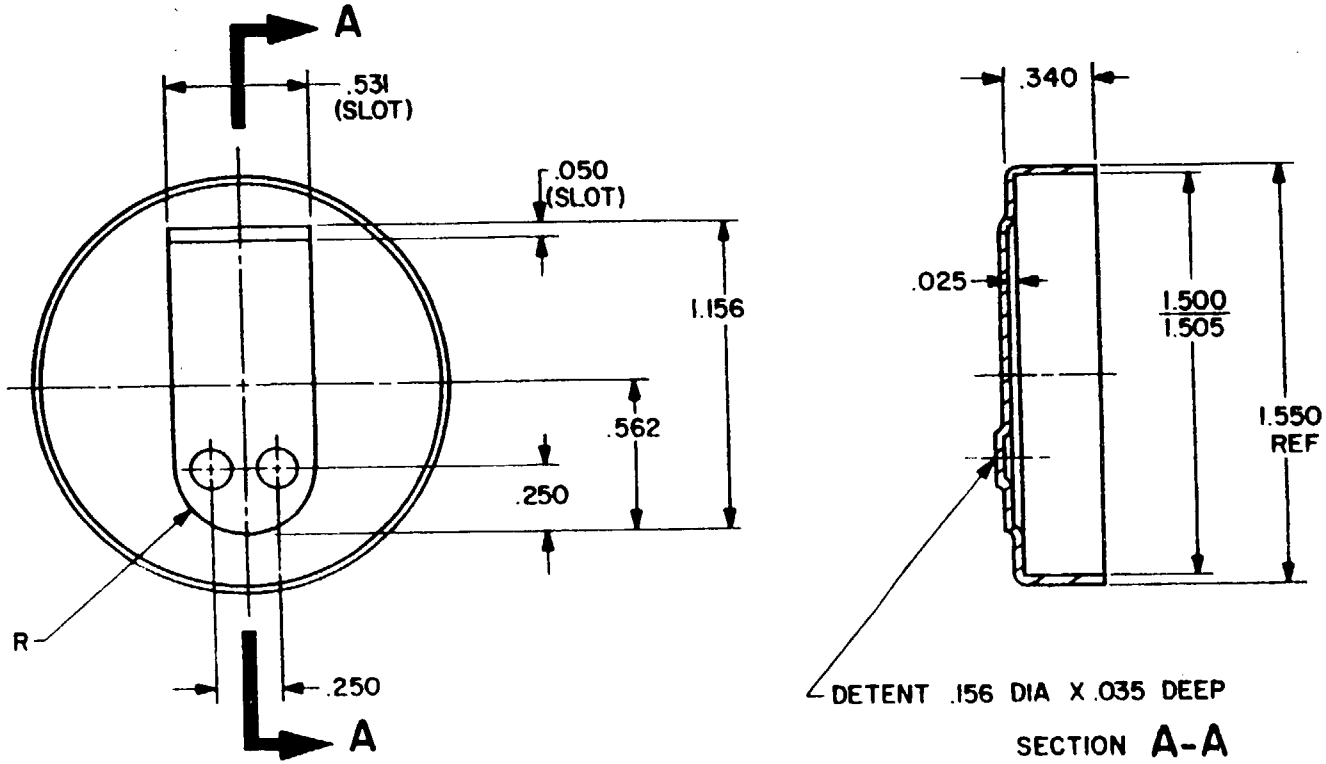

NOTES:
1. DIMENSIONS ARE IN INCHES.
2. TOLERANCES: ± .002
3. MATERIAL: ALUM. .025 (22 GA).

FIGURE 6. TYPE I, PERSONNEL MARKER, OUTSIDE CUP

CX-1043

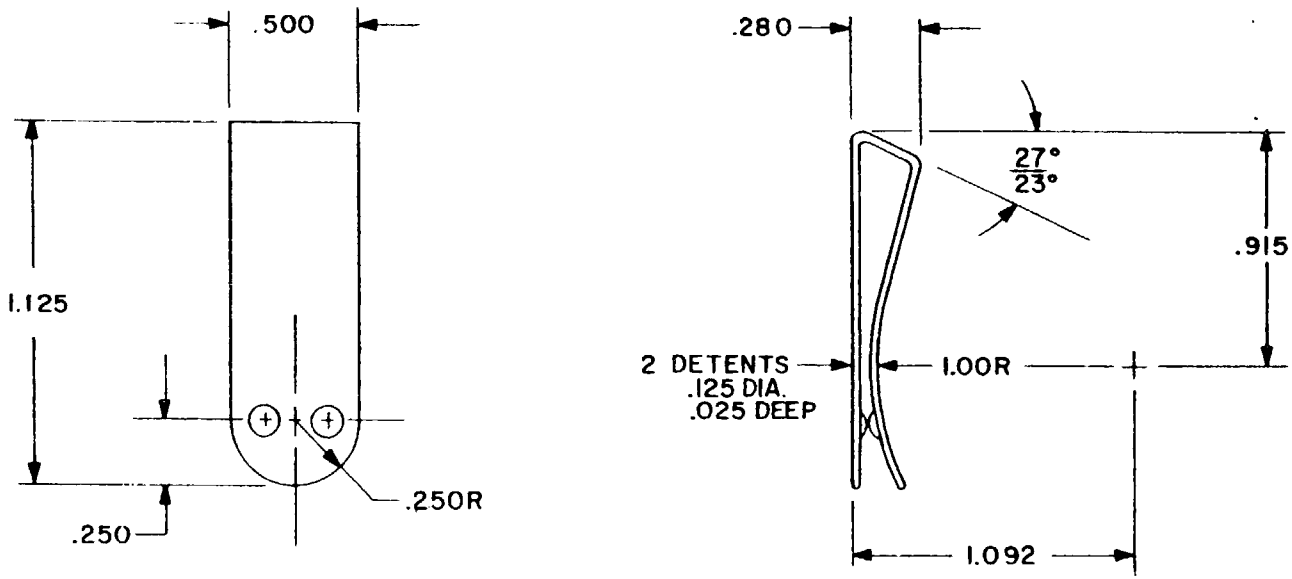

NOTES:

1. DIMENSIONS ARE IN INCHES.
2. MATERIAL: CRES 301, .0250 (24 GA).
3. REMOVE ALL BURRS AND SHARP EDGES FINISH IN ACCORDANCE WITH MIL-F-13924.
4. TOLERANCE: ±.005.

FIGURE 7. TYPE I, PERSONNEL MARKER, CLIP CX-1044

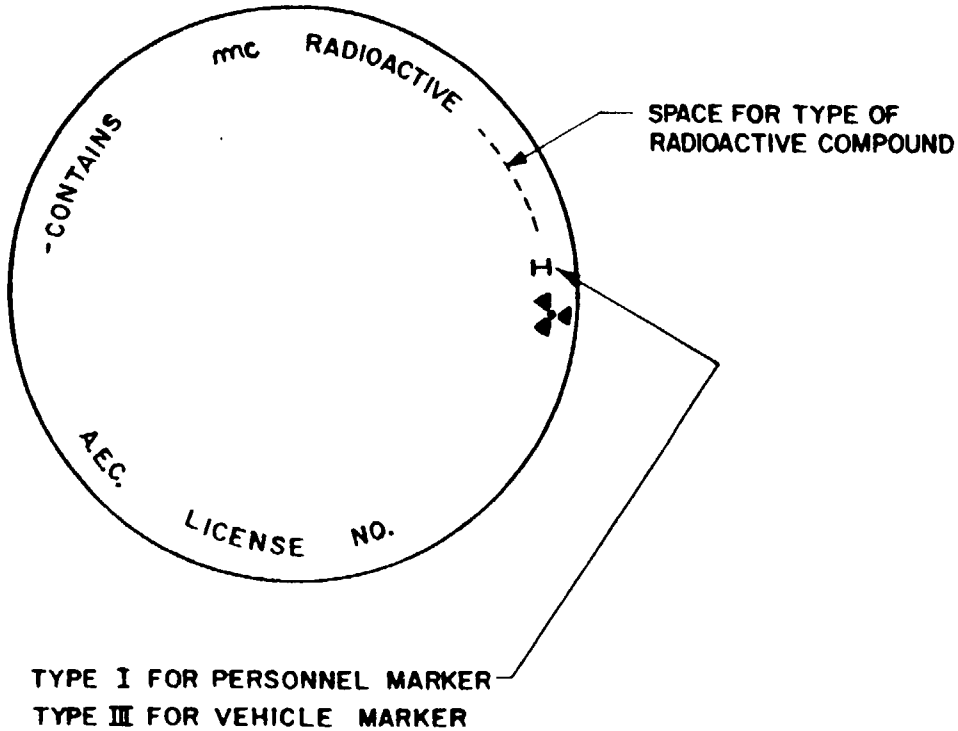

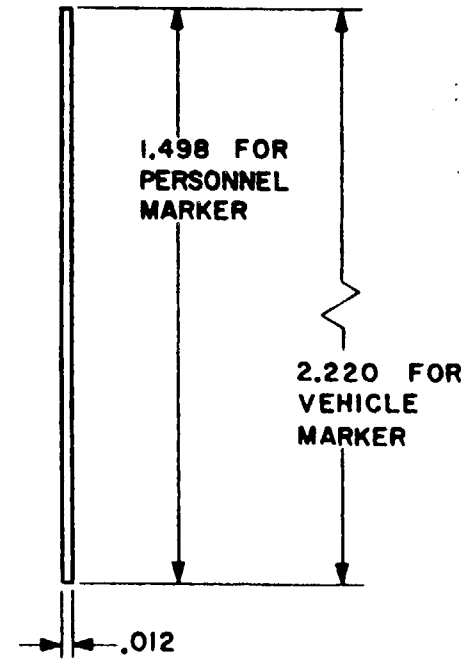

NOTES:

1. DIMENSIONS ARE IN INCHES
2. MATERIAL: ALUMINUM DISC, YELLOW BAKED ENAMEL WITH MAGENTA LETTERS
3. TOLERANCE: ± .002

FIGURE 8. TYPE I, PERSONNEL MARKER AND TYPE III, VEHICLE MARKER, LABEL

CX-1045 A

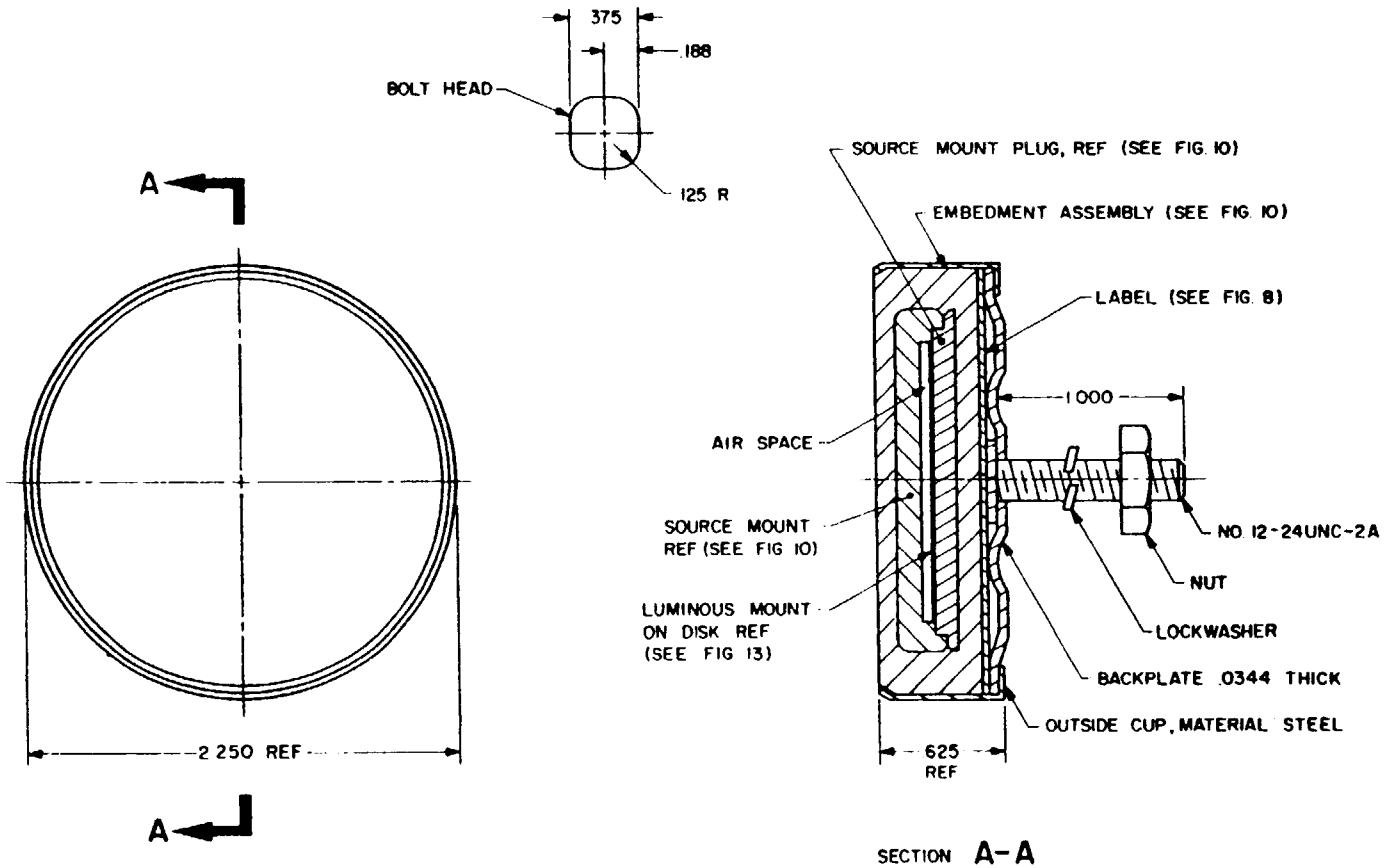

NOTES:
1. DIMENSIONS ARE IN INCHES

FIGURE 9. TYPE III, VEHICLE MARKER, ASSEMBLY

DX-1046

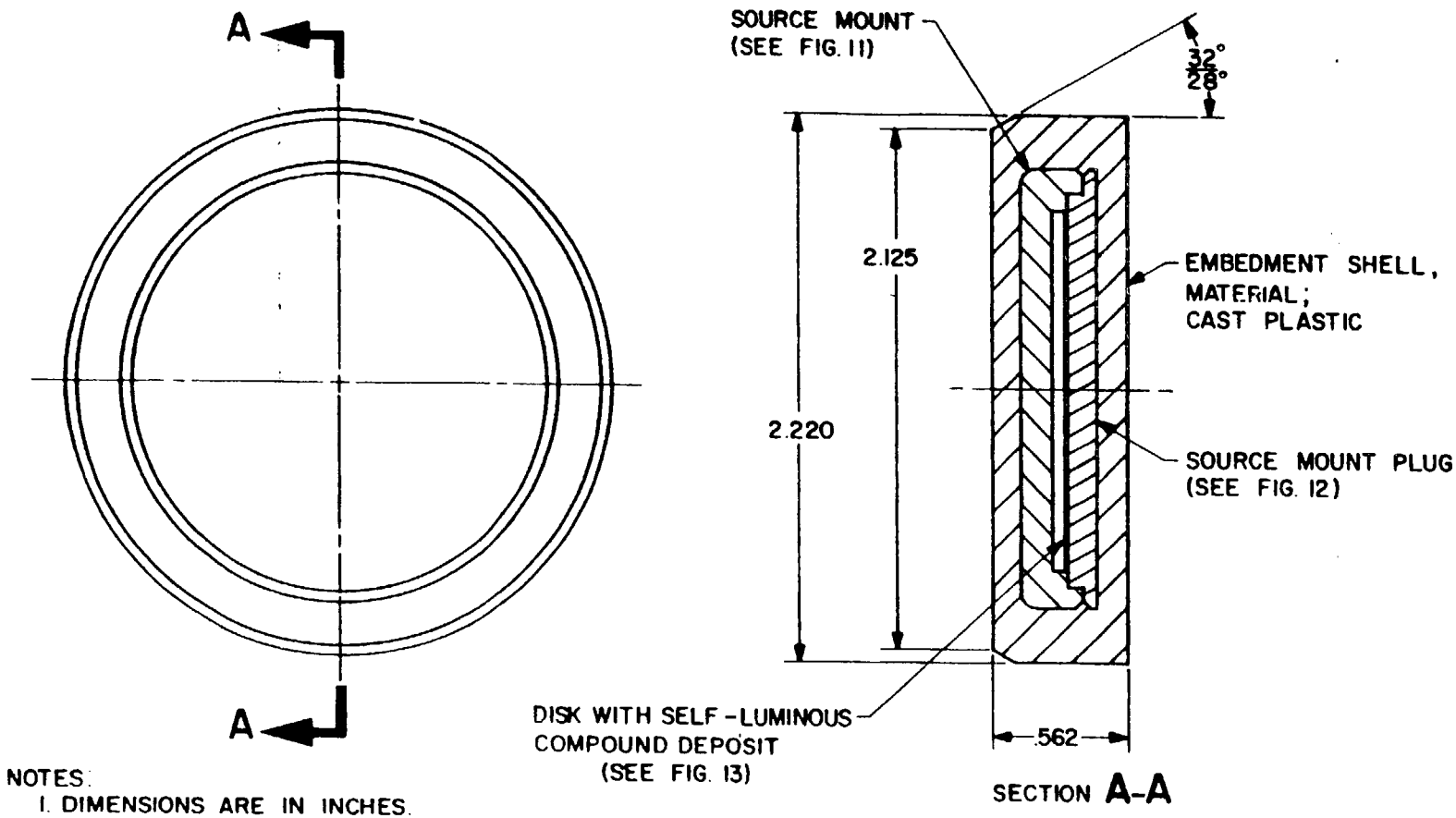

NOTES:
1. DIMENSIONS ARE IN INCHES.
2. TOLERANCE: ± .015

FIGURE 10. TYPE III, VEHICLE MARKER, EMBEDMENT ASSEMBLY

CX-1047A

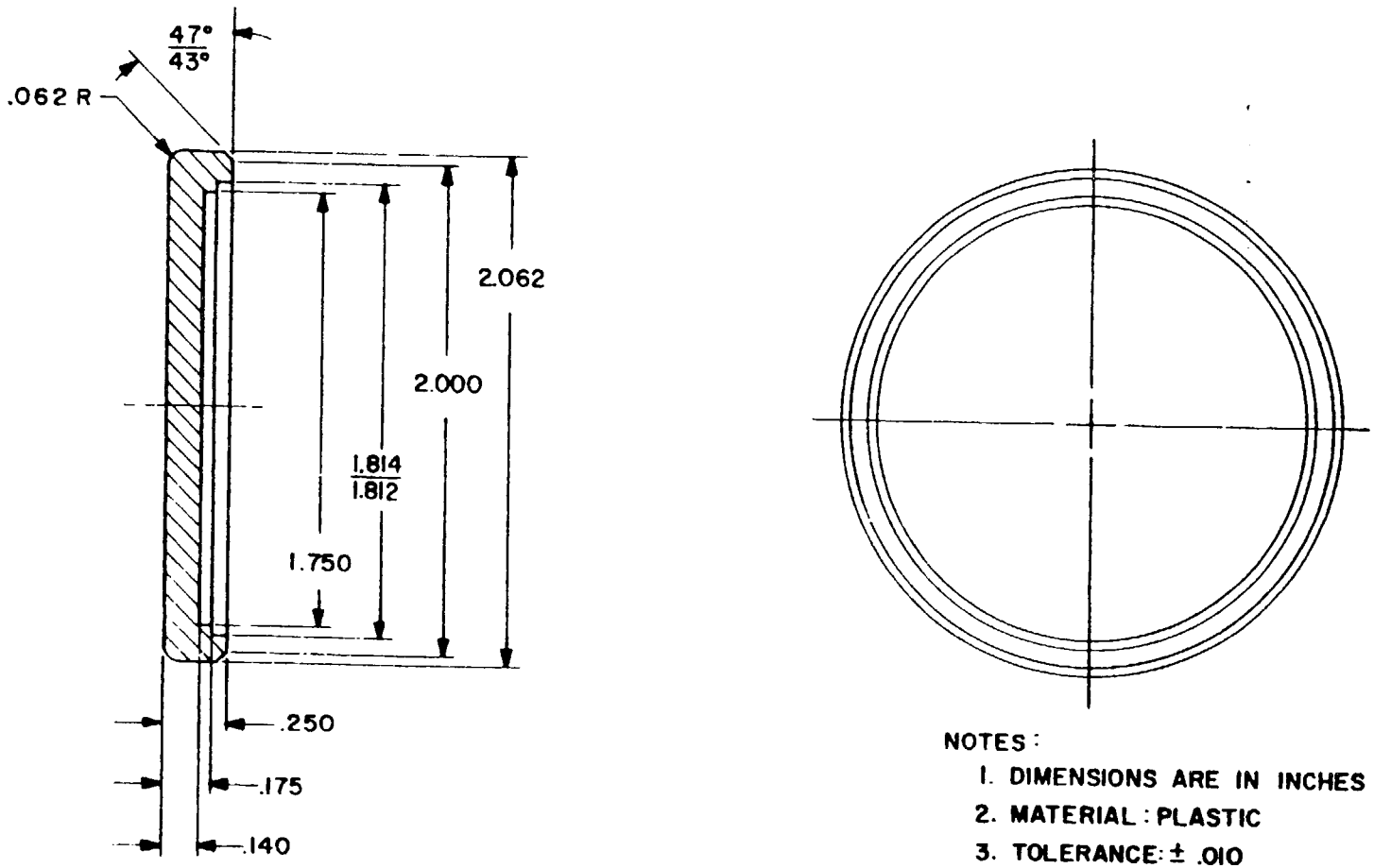

NOTES:

1. DIMENSIONS ARE IN INCHES
2. MATERIAL: PLASTIC
3. TOLERANCE: ± .010

FIGURE 11. TYPE III, VEHICLE MARKER, SOURCE MOUNT

CX-1048

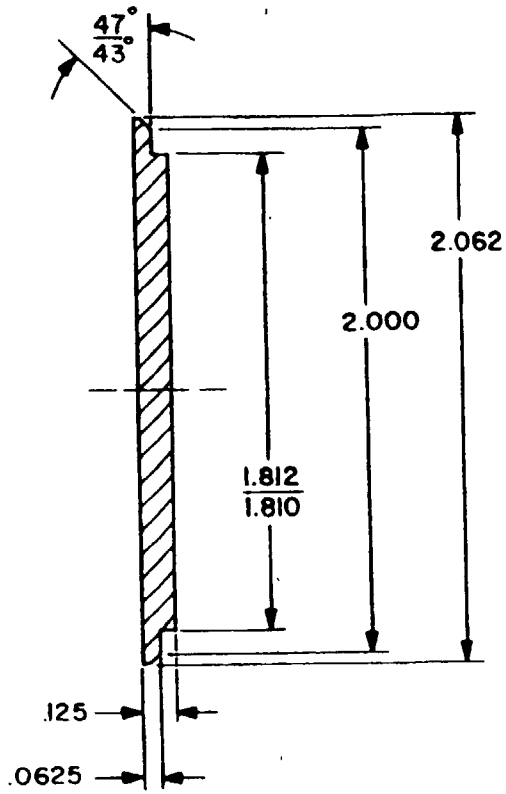

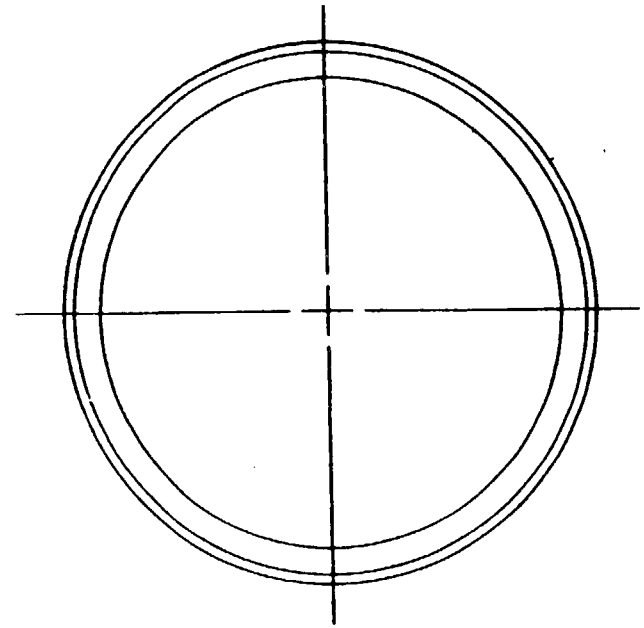

NOTES:
1. MATERIAL: MOLDED PLASTIC
2. DIMENSIONS ARE IN INCHES
3. TOLERANCE: ±.010

FIGURE 12. TYPE III, VEHICLE MARKER SOURCE MOUNT PLUG

CX-1049

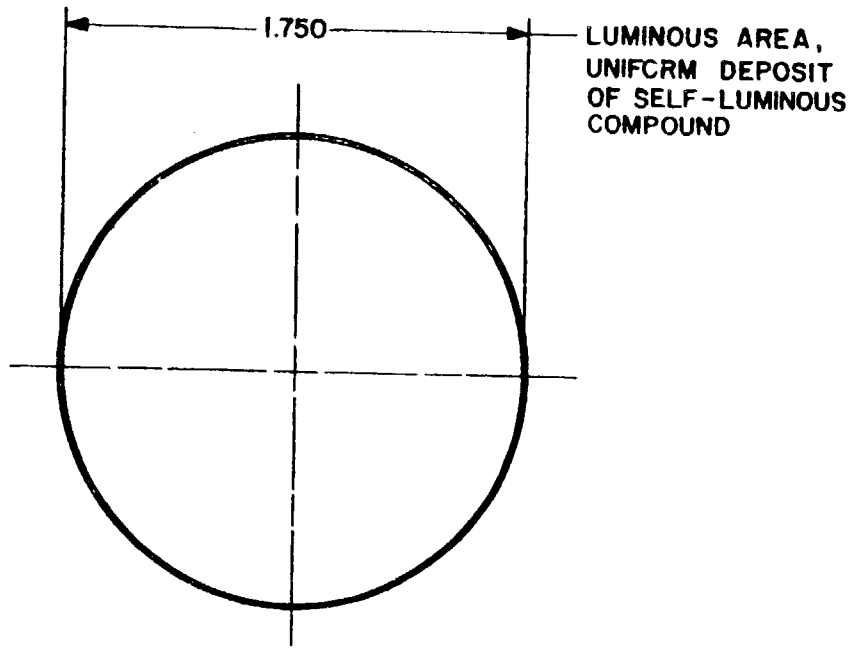

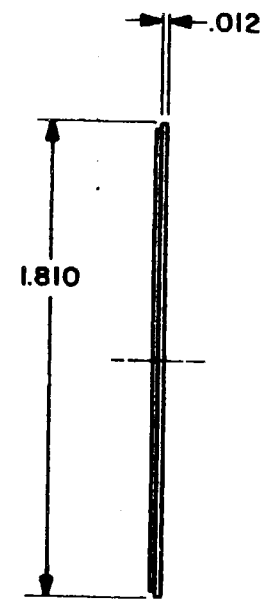

NOTES:

1. DIMENSIONS ARE IN INCHES
2. TOLERANCE : ±.002
3. MATERIAL : ALUMINUM OR ACCEPTABLE MATERIAL.

FIGURE 13. TYPE III, VEHICLE MARKER, DISK WITH SELF-LUMINOUS COMPOUND DEPOSIT.

CX-1050A