Downloaded from http://www.everyspec.com

MIL-M-21188A(AS)
26 April 1972
SUPERSEDING
MIL-M-21188(Aer)
13 December 1957

MILITARY SPECIFICATION

MIRROR ASSEMBLY, CONCAVE GROUND GLASS, OPTICAL LANDING SYSTEM

This specification has been approved by the Naval Air Systems Command, Department of the Navy.

1. SCOPE

1.1 This specification covers one type of concave front surfaced mirror assembly required for permanent shore-based optical landing systems.

2. APPLICABLE DOCUMENTS

2.1 The following documents of the issue in effect on the date of invitation for bids, or request for proposal form a part of this specification to the extent specified herein.

SPECIFICATIONS

Federal

W-J-800	Junction Box, Extension, Junction Box, Cover (Steel, Cadmium or Zinc-Coated)
DD-G-451	Glass, Plate, Sheet, Figured (Float, Flat, for Glazing, Corrugated, Mirrors and Other Uses)
NN-P-530	Plywood, Flat Panel
QQ-A-200/9	Aluminum Alloy Bar, Rod, Shapes, Tube, and Wire, Extruded, 6063
QQ-A-250/11	Aluminum Alloy 6061, Plate and Sheet
TT-E-489	Enamel, Alkyd, Gloss (For Exterior and Interior Surfaces)
PPP-B-636	Box, Fiberboard
PPP-B-1055	Barrier Material, Waterproofed, Flexible
PPP-T-60	Tape, Pressure-Sensitive Adhesive, Waterproof, For Packaging

FSC 6220

Downloaded from http://www.everyspec.com

SPECIFICATIONS (Cont'd)

Military

MIL-C-104	Crate, Wood, Lumber and Plywood Sheathed, Nailed and Bolted
MIL-P-116	Preservation, Methods Of
MIL-D-1000	Drawings, Engineering and Associated Lists
MIL-T-5021	Test, Aircraft and Missile Welding Operators Qualification
MIL-E-5272	Environmental Testing, Aeronautical and Associated Equipment, General Specification For
MIL-C-8514	Coating Compound, Metal Pretreatment, Resin-acid
MIL-P-8585	Primer Coating, Zinc Chromate, Low-moisture-sensitivity
MIL-W-8604	Welding of Aluminum Alloys, Process For
MIL-L-10547	Liners, Case, and Sheet, Overwrap, Water-vaporproof or Waterproof, Flexible

STANDARDS

Military

MIL-STD-105	Sampling Procedures and Tables For Inspection By Attributes
MIL-STD-129	Marking For Shipment and Storage
MIL-STD-130	Identification Marking of U.S. Military Property
MIL-STD-143	Standards and Specifications, Order of Precedence For The Selection Of

(Copies of specifications, standards, drawings, and publications required by suppliers in connection with specific procurement functions should be obtained from the procuring activity or as directed by the contracting officer.)

* 2.2 Other publications. The following document forms a part of this specification to the extent specified herein. Unless otherwise indicated, the issue in effect on date of invitation for bids or request for proposal shall apply.

American Society for Testing and Materials (ASTM)

B 117-64	Standard Method of Salt Spray (Fog) Testing

(Application for copies should be addressed to the American Society for Testing and Materials, 1916 Race Street, Philadelphia, Pennsylvania 19103.)

Downloaded from http://www.everyspec.com

(Technical society and technical association standards are generally available for reference from libraries. They are also distributed among technical groups and using Federal agencies.)

3. REQUIREMENTS

* 3.1 First article. The mirror assembly furnished under this specification shall be a product which has been tested and has passed the first article inspection specified herein.

3.2 Materials. Materials shall conform to applicable specifications as specified herein and on the applicable drawings. Materials which are not covered by applicable specifications or drawings or which are not specifically described herein shall be of the best quality and suitable for the purpose intended.

* 3.2.1 Selection of materials. Specifications and standards for all materials, parts, and Government certification and approval of processes and equipment, which are not specifically designated herein and which are necessary for the execution of this specification, shall be selected in accordance with MIL-STD-143, except as provided in the following paragraph.

3.2.1.1 Protective treatment. Materials used in the construction of the mirror assembly that are subject to corrosion in salt air, or other atmospheric conditions likely to occur during service usage, shall be protected against such corrosion in a manner that will in no way prevent conformance with the performance requirements of this specification. The use of any protective coating that will crack, chip, or scale with age or extremes of atmospheric conditions shall be avoided.

3.2.2 Metals. All metals used in the construction of the mirror assembly shall be of a corrosion-resistant type or shall be suitably protected to resist corrosion.

3.2.3 Castings. Castings shall be of high quality, smooth, sound, and free from blow holes, porosity, cracks, or other defects.

3.3 Standard parts. Standard parts shall be used whenever they are suitable for the purpose, and shall be identified on the drawing by their part numbers. Commercial utility parts such as screws, bolts, nuts, cotter pins, etc., may be used, provided they possess suitable properties and are replaceable by the standard parts without alteration, and provided the corresponding standard part numbers are referenced in the parts list and, if practicable, on the contractor's drawings. In the event there is no suitable corresponding standard part in effect on date of invitation for bids, commercial parts may be used provided they conform to all requirements of this specification.

Downloaded from http://www.everyspec.com

* 3.3.1 Interchangeability. All components having the same manufacturer's part number shall be directly and completely interchangeable with each other with respect to installation and performance. Changes in manufacturer's part number shall be governed by the drawing number requirements of MIL-D-1000.

3.4 Design and construction. The mirror assembly shall be so designed and constructed that no parts will work loose in service. It shall be built to withstand the strains, jars, vibrations, and other conditions incident to shipping, storage, installation, and service. The mirror assembly shall be so constructed that adjustments and repairs can be easily made by the personnel of operating units and overhaul bases with a minimum of training with tools normally available commercially. The mirror assembly shall be designed in such manner that weight is held to the minimum, consistent with the necessary strength and rigidity. The exact shape and design are optional, provided all requirements specified herein are met.

3.4.1 Mirror. The mirror shall be a first surface mirror conforming dimensionally to Figure 1.

3.4.1.1 Mirror blank. The mirror shall be produced from a preformed glass blank made of plate glass.

3.4.1.2 Reflecting surface. The reflecting surface shall be ground and polished to its final radius of curvature, after forming of the mirror blank. The reflecting surface shall have a surface finish of silvering quality plate glass in conformance with DD-G-451.

3.4.1.2.1 Reflective coating. The reflective surface coating shall be uniform in color, and shall be free from stains and defects. The protective finish for the reflective coating shall be capable of withstanding routine cleaning, and all environmental conditions. Finish on edges and back of mirror shall be capable of withstanding all environmental conditions.

3.4.1.2.2 Corrosion. The reflective coating shall not tarnish or discolor, and the optical qualities shall not be impaired by continued exposure to environmental conditions.

3.4.1.2.3 Abrasion. The reflecting surface shall be sufficiently durable to withstand cleaning, with such solvents as cleaning acetone, grain alcohol, or 1 to 3 percent aqueous solution of a detergent such as Aersol OT or Arvus paste or equivalent followed by drying with a soft cloth.

3.4.1.2.4 Reflectivity. The reflective coating shall have a minimum reflectance of 50 percent which shall be maintained with only routine cleaning and polishing.

Downloaded from http://www.everyspec.com

3.4.1.2.5 Adhesion of reflective coating. The reflective coating shall not separate from the mirror reflecting surface after continued exposure to environmental conditions.

3.4.1.2.6 Optical qualities. The optical qualities of the mirror shall be such as to meet the requirements specified in the quality conformance inspections.

3.4.1.2.7 Distortion. Distortion of the mirror reflecting surface shall not exceed the limitations specified in the quality conformance inspections.

3.4.1.3 Shatter resistance. The mirror shall be shatter resistant. If a shatter-resistant backing is included, the border lapped over the reflecting surface shall not exceed 3/4 of an inch in width.

3.4.1.4 Provision for mounting. The border area, 1-1/4 inches in width of both front face and back of the mirror and all edges, shall be smooth so as to present a suitable and uniform mounting surface. Mirror thickness in the border area shall be as uniform as possible, and shall not exceed the dimensional tolerances specified in Figure 1. A "U" shaped channel molding shall be added around the entire edge of the mirror with appropriate lugs for mounting.

3.4.1.5 Environmental conditions.

3.4.1.5.1 Temperature. The mirror shall be capable of withstanding the high and low temperature specified when tested in accordance with the first article inspections.

3.4.1.5.2 Thermal shock. The mirror shall be capable of withstanding thermal shock when tested as specified under the first article inspections.

3.4.1.5.3 Salt spray. The mirror shall be capable of withstanding weather and salt spray when tested as specified under the first article inspections.

3.4.1.5.4 Humidity. The clarity of the image shall not be affected, the specular reflectivity reduced, the reflective coating separated from the mirror surface, or any shatter-resistant backing separated from the mirror, when subjected to the humidity conditions specified under the first article inspections.

3.4.1.6 Interchangeability. All mirrors shall be completely interchangeable with each other with respect to installation and performance, within the dimensional tolerances specified in Figure 1.

Downloaded from http://www.everyspec.com

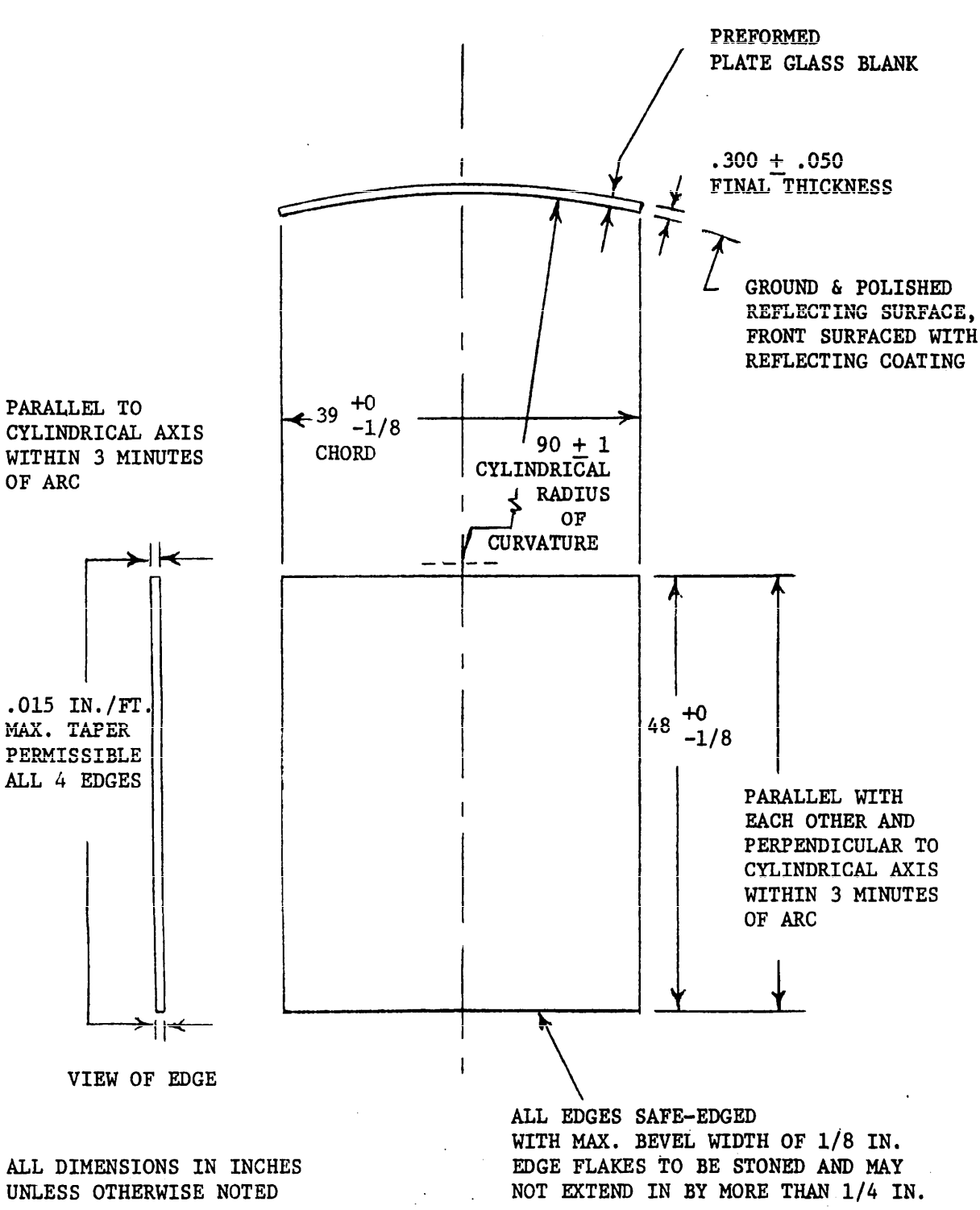

ALL DIMENSIONS IN INCHES
UNLESS OTHERWISE NOTED

SCALE 3/4 = 12

FIGURE 1. MIRROR DETAILS

Downloaded from http://www.everyspec.com

3.4.1.7 Weight. The weight of the mirror shall not exceed 65 pounds.

3.4.1.8 Marking and identification. A stencil or a label permanently and legibly filled in with the following information shall be affixed to the back of the mirror in accordance with MIL-STD-130:

Mirror - Glass
Type - Concave, Ground
Specification MIL-M-21188
Manufacturer's Part No.
Order No.
Stock No.
Manufacturer's Name or Trademark
U.S. Government Property

3.4.1.9 Performance. The mirror shall meet the performance requirements specified in Section 4 when subjected to the applicable tests.

3.4.1.10 Workmanship. Workmanship shall be in accordance with high grade commercial practice covering the manufacture of ground and polished glass mirrors.

3.4.2 Mirror enclosure. The mirror shall be mounted in an aluminum enclosure. The enclosure shall be 18 inches deep not more than 3 feet 6 inches wide and not more than 4 feet 3 inches high. The enclosure shall be closed in the rear and open in the front. The mirror shall be recessed approximately 6 inches from the front of the enclosure.

* 3.4.2.1 Enclosure construction. The enclosure shall be constructed of 1/8 inch 61S-T6 aluminum plate. The bottom shall be double thickness with the three sides and top of single thickness. 1-1/4 by 1-1/4 by 1/8 inches aluminum angle shall be welded on all edges for reinforcing purposes. The material shall conform to QQ-A-200/9 and QQ-A-250/11.

3.4.2.2 Mirror mounting. The mirror shall be suspended near the top of the enclosure with the bottom adjustable from -2-1/2 degrees to +2-1/2 degrees. The mirror shall be provided with a rubber skirt so that the space between the mirror and the rear of the box is practically airtight.

* 3.4.2.3 Heater. A 500W 115V strip heater shall be installed between the mirror and the rear of the enclosure. The heater shall be near the bottom of the space. A line thermostat set to maintain the temperature of the space between the mirror and the rear of the enclosure at 85°F shall be installed near the top of the space. The interior wiring from the heater and thermostat shall be terminated in a 4 inch by 4 inch by 1/2 inch junction

Downloaded from http://www.everyspec.com

box conforming to W-J-800 near the bottom of the enclosure. Handholes shall be provided in the back of the enclosure to permit access to the heater, junction box, and thermostat. Cover plates with screw type fasteners shall be provided for all handholes.

3.4.2.4 Canvas cover. A cover of 17.55 ounces canvas shall be provided to cover the front of the enclosure when the mirror is not being used for long periods of time. This cover shall be permanently fastened to the top edge of the enclosure with snap fasteners being provided along the 2 sides and bottom edges. The canvas shall be orange in color.

3.4.2.5 Mounting hubs. Six mounting hubs shall be provided on the bottom of the enclosure for installing the assembly on six standard runway marker light frangible couplings. The couplings shall be arranged in 2 rows of 3 with 15 inches between centers of the couplings in rows and 10 inches between centerlines of rows. The row of 3 hubs at the rear of the enclosure shall permit electrical wiring to pass from the interior of the enclosure through the hub and frangible couplings to the handhole at the mirror location. The interior diameter of the hubs shall be 2-1/2 inches and the interior length shall be 2-1/8 inches. The hubs shall have three 3/8 inch adjusting screws arranged symmetrically at angles of 120 degrees around the hub. The arrangement of the 6 hubs shall be symmetrical with respect to the bottom of the enclosure. Location shall be to a 1/32 inch tolerance.

* 3.4.2.6 Paint finish. All external surfaces of the enclosure shall be given one mist coat of wash primer, MIL-C-8514, and one primer coat of zinc-chromate conforming to MIL-P-8585 and two coats of international orange glossy enamel conforming to TT-E-489.

3.4.2.7 Weight. The gross weight of the completely assembled enclosure shall be no more than 100 pounds.

3.4.2.8 Welders and welding.

3.4.2.8.1 Welders. Before assigning any welder to manual welding work covered by this specification, the contractor shall provide the Government Inspector with the names of the men assigned to the work, along with a certificate stating that each welder has successfully passed qualifying tests as prescribed by MIL-T-5021.

3.4.2.8.2 Welding. The surfaces of parts to be welded shall be free from scale, paint, grease, and other foreign matter. Aluminum alloy welding shall be in accordance with MIL-W-8604.

Downloaded from http://www.everyspec.com

4. QUALITY ASSURANCE PROVISIONS

* 4.1 Responsibility for inspection. Unless otherwise specified in the contract or purchase order, the supplier is responsible for the performance of all inspection requirements as specified herein. Except as otherwise specified in the contract or order, the supplier may use his own or any other facilities suitable for the performance of the inspection requirements specified herein, unless disapproved by the Government. The Government reserves the right to perform any of the inspections set forth in the specification where such inspections are deemed necessary to assure supplies and services conform to prescribed requirements.

* 4.2 Classification of inspections. Mirror assemblies covered by this specification shall be subjected to the following inspections.

(a) First article inspection

(b) Quality conformance inspection

* 4.3 First article inspection. First article inspection shall be made on mirror assemblies representative of the production assemblies to be supplied under the contract. First article inspections shall be accomplished using the test procedures of 4.6. The government inspector and the procuring activity shall be advised when the inspections are to be conducted so that a representative may be designated to witness or supervise the inspections when so desired. Contractors not having adequate facilities to conduct all required inspections shall obtain the services of a commercial testing laboratory acceptable to the procuring activity.

* 4.3.1 First article inspection data. The contractor shall submit all data collected in conducting these inspections to the procuring activity for review and approval.

* 4.3.2 First article inspection samples. First article inspection samples shall consist of one mirror assembly.

* 4.4 Quality conformance inspection. The contractor shall furnish all samples and shall be responsible for accomplishing all the inspections. Quality conformance inspection shall be under the supervision of the government quality control representative. Acceptance or approval of material during the course of manufacture shall in no case be construed as a guarantee of the acceptance of the finished product. Quality conformance inspection shall consist of the following tests:

(a) Individual tests (see 4.4.1)

(b) Inspection of preparation for delivery (see 4.4.2)

Downloaded from http://www.everyspec.com

* 4.4.1 Individual tests. Each mirror assembly shall be subjected to the tests specified in Table I.

TABLE I - QUALITY CONFORMANCE INSPECTION

Test	Requirements Paragraph	Method Paragraph
Examination of product	3.2, 3.4.1.8, 3.4.1.10	4.6.1
Dimensions and radius of curvature	3.4.1	4.6.2
Optical performance	3.4.1.2.6	4.6.3

* 4.4.2 Inspection of preparation for delivery. Samples from a quantity of shipping containers fully prepared for delivery, just prior to closure, shall be selected at random from each lot in accordance with MIL-STD-105 at Inspection Level S-2. The lot size shall be the number of shipping containers in the lot. Each sample selected shall be examined for defects and to determine conformance to all the applicable requirements of Section 5 of this specification. If the number of defective shipping containers exceeds the Acceptable Quality Level of 4.0, the lot represented by the sample shall be rejected.

* 4.5 Standard conditions for test. Unless otherwise specified, all inspection required by this specification shall be made under the following conditions:

Temperature	Room ambient 25 ±5°C
Pressure	Normal atmospheric (approximately 29.92 inches Hg)
Humidity	Room ambient up to 90 percent relative humidity

4.6 Test methods.

4.6.1 Examination of product. Each mirror assembly shall be inspected to determine compliance with the requirements specified herein with respect to material, workmanship and marking.

4.6.2 Dimensions and radius of curvature. Each mirror shall be inspected for compliance with tolerances and specifications shown in Figure 1. The radius of curvature shall be determined with an accurately formed template, or with any other means acceptable to the inspector.

Downloaded from http://www.everyspec.com

4.6.3 Optical performance. Each mirror shall be subjected to the following tests for optical performance:

(a) Test for excessive variation in curvature

(b) Image reflectivity

4.6.3.1 Test for excessive variations in curvature. Each mirror shall be subjected to a test diagrammed in Figure 2 in accordance with the following procedure:

(a) Place mirror in a test fixture similar to one shown in Figure 2 so that the mirror can be rotated about a horizontal axis and can also be rotated about a vertical axis. The mirror shall be held in the test fixture in such a manner that a strain-free mounting is effected in the vertical position. The strain-free curvature of the mirror surface shall be maintained throughout any angle of tilt with additional supports if required.

(b) Establish a grid, of horizontal and vertical lines, spaced 6 inches from the horizontal and vertical centerlines on the mirror. Any suitable means of establishing the 6-inch grid stations for the mirror may be utilized, providing that no markings are made on the mirror that will permanently stain or disfigure the reflective coating in any way.

(c) Locate a source light assembly (to be government furnished unless otherwise specified in the procurement specification) 165 feet from the mirror on a line normal to the centerofthe mirror. The source lights shall be individually aimed in both azimuth and elevation, at the center of the mirror. The brightness of the source lights shall be adjusted so that a bright single "ball" image appears on the surface of the mirror when viewed from a position immediately behind the source lights.

(d) Locate a reticle telescope at the source lights position and in the same horizontal plane as the source lights. Adjust telescope such that the horizontal cross-hair aligns with horizontal centerline of the mirror, and the vertical cross-hair aligns with the vertical centerline of the mirror. Rotate mirror about its horizontal axis until the horizontal center mark of the source light image is also aligned with the horizontal cross-hair of the telescope, at the mirror vertical centerline. This is the "zero" position of the image.

Downloaded from http://www.everyspec.com

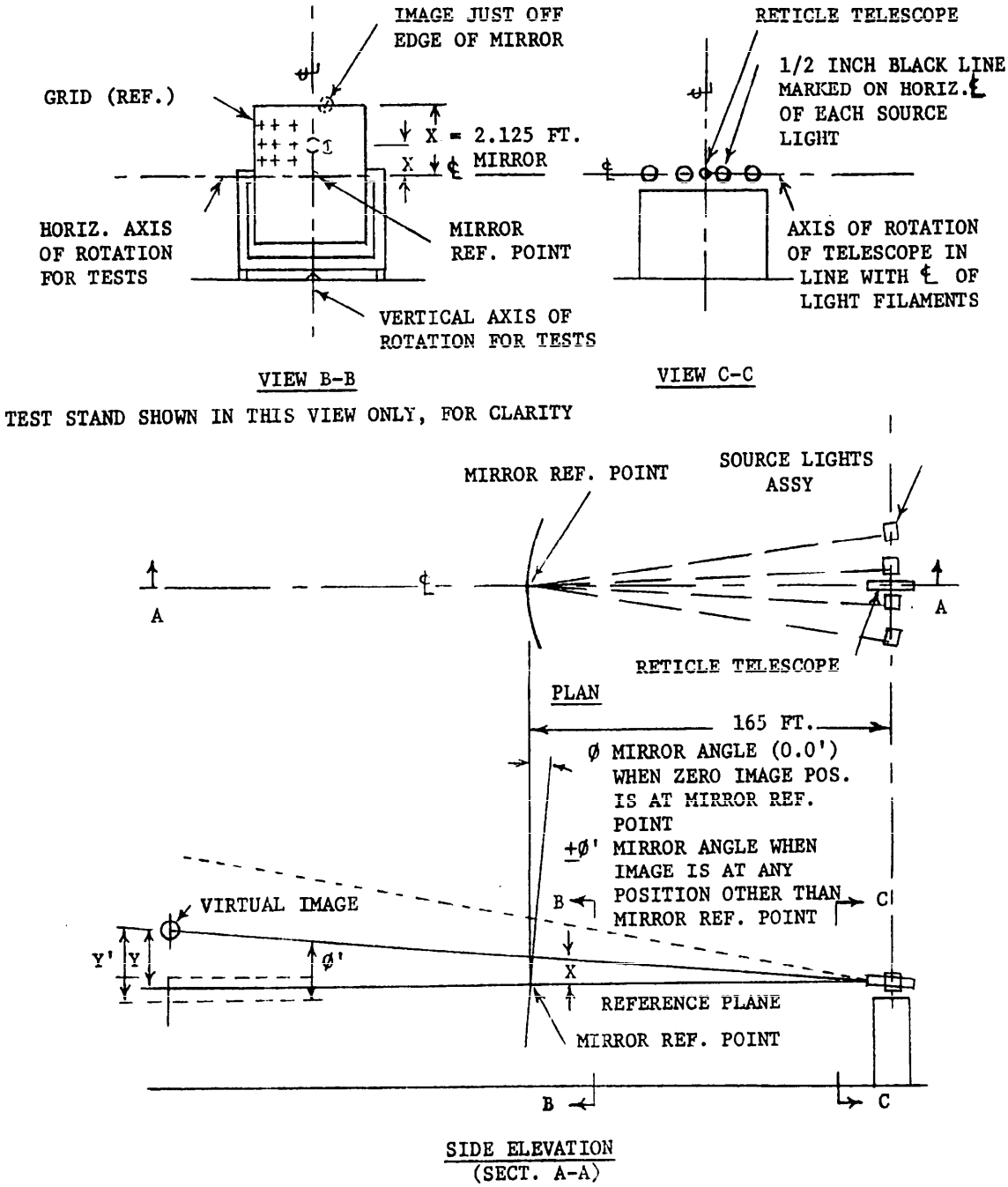

SCALE - NONE

FIGURE 2. TEST ARRANGEMENT

Downloaded from http://www.everyspec.com

(e) Mount a precision inclinometer capable of measurements to within one-half of one minute of arc or other similar device on the mirror fixture and adjust it to read 0.0 minute of arc with the mirror adjusted in accordance with paragraph (d) above. Record angle $\emptyset$ at this position as 0.0 minute.

(f) Rotate mirror about its vertical and horizontal axis as necessary until image of the source light is aligned with the horizontal cross-hair of the telescope and the horizontal mirror centerline at each of the three grid points on each side of the mirror vertical centerline. Record angle ($\emptyset'$) as read, $\pm$ about the 0.0 minute inclinometer reference, at each of these grid points (with image at "zero" positions).

(g) With the mirror rotated to reflect the image along each of the vertical grid lines, cause the image to move vertically on the surface of the mirror by rotation of the mirror about the horizontal axis. Record angular rotation of the mirror ($\emptyset'$) with respect to the 0.0 minute inclinometer reference for each six inch increment the image is displaced from the "zero" position. Record angular rotation ($\emptyset'$) of the mirror with respect to the 0.0 minute inclinometer reference for which the image is just off the mirror edge, top and bottom.

(h) Using $\emptyset'$, calculate Y' as follows:

$$Y' = \sin \emptyset' \times 330 \text{ feet.}$$

(i) Calculate Y'/X ratio for each intersection point on grid, and present results in a form as shown in Figure 3.

Where X = 0, the values for Y'/X are to be omitted, and in their place record only the values for $\emptyset'$.

(j) The results of this inspection procedure supply a numerical ratio of $\frac{Y'}{X}$ at the intersection points of grid lines on the mirror at 6 inch intervals, horizontally and vertically. Y' is a calculated displacement of the virtual image, when the light is directed at point X, see Figure 2. Theoretically, the Y'/X ratio for a perfect mirror would be 2.0 at all points on the mirror.

Downloaded from http://www.everyspec.com

4.6.3.1.1 Acceptance. The following are the maximum deviations allowed for values of Ø' and Y'/X.

(a) Angle Ø'

(1) The difference between any two adjacent readings for grid points on the horizontal centerline (zero image positions) shall not exceed 2 minutes of arc for angle Ø'.

(2) The total difference between the highest and lowest readings for grid point along the horizontal centerline (zero image positions) shall not exceed 8 minutes of arc for angle Ø'.

(b) Ratio Y'/X

(1) The difference between any two adjacent ratios Y'/X in a horizontal line shall not exceed the following limits:

0.38 where X = ± 0.50 ft.

0.19 where X = ± 1.00 ft.

0.13 where X = ± 1.50 ft.

(2) The total difference between highest and lowest values for ratio Y'/X in a horizontal line shall be within the following limits:

1.52 where X = ± 0.50 ft.

0.76 where X = ± 1.00 ft.

0.52 where X = ± 1.50 ft.

(3) The $\frac{Y'}{X}$ ratio for all grid points on the mirror within Zone A of Figure 3 shall be:

not greater than 2.60

nor less than 1.40

Downloaded from http://www.everyspec.com

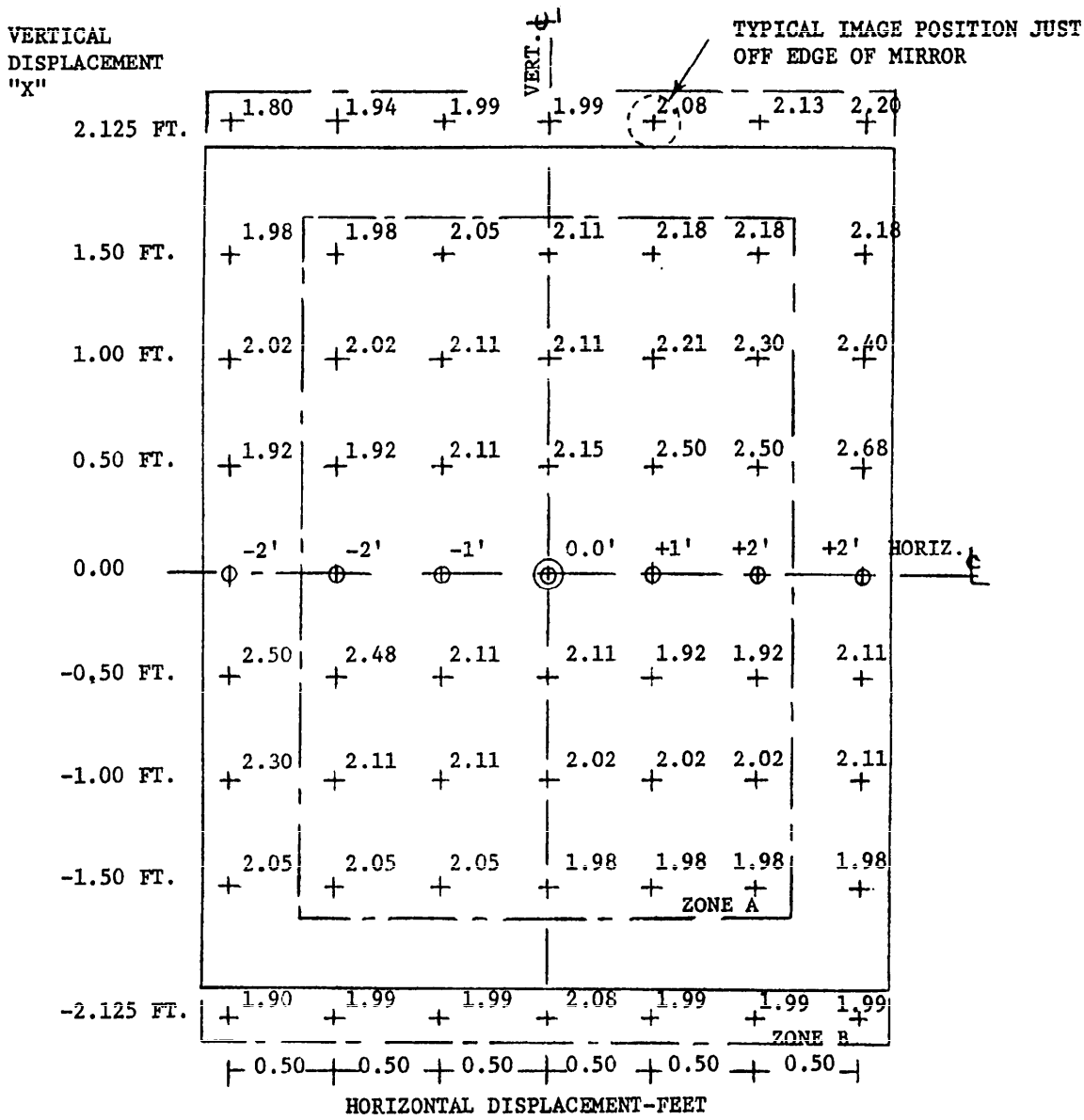

MIRROR REF. POINT RECORDED AS ANGLE $\phi = 0.0'$ (MIN)

POINTS RECORDED AS ANGLE ϕ' (MINUTES OF ARC)

POINTS RECORD AS RATIO Y'/X

MANUFACTURER:		
MIRROR NO.		
DATE:		
ZONE	A	B
HIGH Y'/X	2.50	2.68
LOW Y'/X	1.92	1.80

FIGURE 3. TYPICAL PRESENTATION OF INSPECTION RESULTS

Downloaded from http://www.everyspec.com

The $\frac{Y'}{X}$ ratio for all grid points on the mirror in outer Zone B of Figure 3 shall be:

not greater than 3.00

nor less than 1.00

(c) Variations in excess of those shown above shall be cause for rejection of the mirror.

4.6.3.2 Image reflectivity. In addition to, and concurrently with, the test conducted in paragraph 4.6.3.1, observation of any of the following image defects shall be cause for rejection of the mirror:

(a) Multiple "ball" image.

(b) Variation in "ball" image size of more than one and one-half "ball" image diameters in any direction.

(c) Vertical or horizontal streaking or smearing of light that causes poor definition of the "ball" image, or elongated image more than one and one-half "ball" image diameter in any direction.

(d) If the "ball" image disappears.

4.6.4 Reflectance. The spectral reflectance shall be determined by directing a substantially collimated beam of incandescent light at approximately 45 degrees onto the specimen and directing the fraction of this beam specularly reflected into a receptor of the same size as the collimated beam which shall have a spectral sensitivity approximating the luminosity function of the standard observer of the International Commission on Illumination. The fraction of the beam specularly reflected shall be determined either by actual measurement of the incident and reflected beams or by comparison of the beams reflected by the test specimen with that from a suitably calibrated standard mirror of about the same specular reflectance.

4.6.5 Abrasion. The reflecting surface shall be cleaned with a soft unbleached Canton flannel cloth, dusted on the nap side with dry soil which has passed through a 200 mesh sieve. A 6 inch by 6 inch area of the reflective coating surface of the mirror shall be rubbed lightly with the cloth for 30 seconds using a rotary motion. The foregoing cleaning cycle shall be repeated 30 times. The reflectance shall not be reduced more than 4 percent of the measured value obtained in reflectance test, paragraph 4.6.4.

Downloaded from http://www.everyspec.com

4.6.6 Shatter resistance test. A test specimen of a mirror similar in quality, and with the same shatter resistant backing as the full size mirror shall be used for this test. The test specimen shall be at least 12 inches by 12 inches, and shall be subjected to all environmental tests specified herein, prior to conducting the shatter resistance test.

4.6.6.1 Test procedure. The sample shall be subjected to sufficient impact to produce breakage of at least one quarter of the area into segments of a surface area of approximately one square inch. The size of the particles that may be allowed to separate from the test specimen shall not exceed one square inch.

4.6.7 Environmental. The mirror shall be subjected to the following tests conducted in accordance with the specified procedures of MIL-E-5272.

4.6.7.1 Humidity. Procedure I of MIL-E-5272 shall apply. The clarity of the image shall not be affected and the specular reflectance shall not be reduced below that established by the reflectance tests, paragraph 4.6.4. Any evidence of damage revealed by subsequent inspection of the mirror shall be cause for rejection.

4.6.7.2 High temperature test. Procedure II of MIL-E-5272 shall apply, except that no inspection is required during elevated temperature period. After temperature is reduced to prevailing room conditions, any evidence of damage revealed by subsequent inspection of the mirror shall be cause for rejection.

4.6.7.3 Low temperature test. Procedure I of MIL-E-5272 shall apply, except that no inspection is required lowered temperature period. After temperature is raised to prevailing room conditions, any evidence of damage revealed by subsequent inspection of the mirror shall be cause for rejection.

4.6.7.4 Thermal shock test. Procedure I of MIL-E-5272 shall apply, except that the low temperature limit shall be 0 degree Fahrenheit. If the glass breaks during this test, no mirror coating separation shall occur, even along the line of glass breakage. The glass breakage shall not be cause for rejection.

* 4.6.8 Salt-spray. The mirror assembly shall be subjected to 168 hours of continuous salt spray in accordance with ASTM B117-64. There shall be no reduction in clarity of image. The reflectance shall not be reduced more than 4 percent of the measured value obtained in the reflectance tests, paragraph 4.6.4. Any other evidence of deterioration detrimental to serviceability of the mirror, shall be cause for rejection.

Downloaded from http://www.everyspec.com

4.6.9 Adhesion of reflective coating. After the completion of the foregoing thermal shock tests, tape conforming to Specification PPP-T-60, 1 inch wide, shall be applied firmly to the reflecting surface and stripped off quickly at a temperature of 70 ± 4 degrees Fahrenheit. Any visible detachment of the reflective coating from the mirror surface shall be cause for rejection.

5. PREPARATION FOR DELIVERY

* 5.1 Preservation and packaging. Preservation and packaging shall be Level A or C as specified (see 6.2).

5.2 Packaging.

5.2.1 Level A. Unless otherwise specified, each mirror assembly shall be packaged for shipment in accordance with Method III of MIL-P-116 and providing for physical and mechanical protection. The mirror assembly shall be blocked, bracked or cushioned with a corrugated fiber container conforming to PPP-B-636.

5.2.2 Level C. When this level is required, the packaging shall be in accordance with standard commercial practice.

5.3 Packing. The mirror assembly packaged in accordance with paragraph 5.2.1 shall be of a minimum weight and cube consistent with the specification required. Packing shall be Level A, B, or C as specified (see 6.2).

* 5.3.1 Level A. The mirror assembly packaged in accordance with paragraph 5.2.1 shall be packed in an exterior type shipping crate conforming to MIL-C-104. A case liner constructed of material conforming to PPP-B-1055 and fabricated in accordance with MIL-L-10547 shall be provided. Plywood when used shall conform to NN-P-530 Group A, Type I.

* 5.3.2 Level B. The mirror assembly packaged in accordance with paragraph 5.2.1 shall be packed in exterior type crate conforming to MIL-C-104.

5.3.3 Level C. The mirror assemblies shall be packed to insure that the shipment arrives at destination in a satisfactory condition. The shipment shall conform to the applicable carrier's rules and regulations in effect at the time of shipment.

5.4 Marking of shipments. Interior packages and exterior shipping containers shall be marked in accordance with MIL-STD-129. The nomenclature shall be as follows: Mirror Assembly, Concave Ground Glass, Optical Landing System, Specification MIL-M-21188.

Downloaded from http://www.everyspec.com

6. NOTES

6.1 Intended use. The mirror assembly covered by this specification is intended for use with permanent shore-based optical landing systems.

* 6.2 Ordering data. Procurement documents should specify the following:

(a) Title, number and date of this specification.

(b) Levels of packaging and packing of shipments required (see 5.2 and 5.3).

6.3 Changes from previous issue. The outside margins of this document have been marked "*" to indicate where changes (deletions, additions, etc.) from the previous issue have been made. This has been done as a convenience only and the Government assumes no liability whatsoever for any inaccuracies in these notations. Bidders and contractors are cautioned to evaluate the requirements of this document based on the entire content as written irrespective of the marginal notations and relationship to the last previous issue.

Preparing Activity:
Navy - AS
Project No. 6220-N218

Downloaded from http://www.everyspec.com

Downloaded from http://www.everyspec.com

SPECIFICATION ANALYSIS SHEET

Form Approved
Budget Bureau No. 22-R255

INSTRUCTIONS: This sheet is to be filled out by personnel, either Government or contractor, involved in the use of the specification in procurement of products for ultimate use by the Department of Defense. This sheet is provided for obtaining information on the use of this specification which will insure that suitable products can be procured with a minimum amount of delay and at the least cost. Comments and the return of this form will be appreciated. Fold on lines on reverse side, staple in corner, and send to preparing activity. Comments and suggestions submitted on this form do not constitute or imply authorization to waive any portion of the referenced document(s) or serve to amend contractual requirements.

SPECIFICATION
MIL-M-21188A(AS) MIRROR ASSEMBLY, CONCAVE GROUND GLASS, OPTICAL LANDING SYSTEM

ORGANIZATION

CITY AND STATE

CONTRACT NUMBER

MATERIAL PROCURED UNDER A

☐ DIRECT GOVERNMENT CONTRACT ☐ SUBCONTRACT

1. HAS ANY PART OF THE SPECIFICATION CREATED PROBLEMS OR REQUIRED INTERPRETATION IN PROCUREMENT USE?

A. GIVE PARAGRAPH NUMBER AND WORDING.

B. RECOMMENDATIONS FOR CORRECTING THE DEFICIENCIES

2. COMMENTS ON ANY SPECIFICATION REQUIREMENT CONSIDERED TOO RIGID

3. IS THE SPECIFICATION RESTRICTIVE?

☐ YES ☐ NO *(If "yes", in what way?)*

4. REMARKS *(Attach any pertinent data which may be of use in improving this specification. If there are additional papers, attach to form and place both in an envelope addressed to preparing activity)*

SUBMITTED BY *(Printed or typed name and activity - Optional)*

DATE

DD FORM 1 JAN 66 1426

REPLACES EDITION OF 1 OCT 64 WHICH MAY BE USED.

Downloaded from http://www.everyspec.com

FOLD

DEPARTMENT OF THE NAVY

Naval Air Engineering Center
Philadelphia, Pennsylvania 19112

POSTAGE AND FEES PAID
NAVY DEPARTMENT

OFFICIAL BUSINESS

Engineering Specifications and Standards Department (Code X)
Naval Air Engineering Center
Philadelphia, Pennsylvania 19112

FOLD