Downloaded from http://www.everyspec.com

NON-MEASUREMENT SENSITIVE

MIL-M-19863D(SH)
8 May 1991
SUPERSEDING
MIL-M-19863C(SHIPS)
1 April 1966
(See 6.14)

MILITARY SPECIFICATION

MOUNT, RESILIENT: TYPE 5B5,000H

This specification is approved for use by the Naval Sea Systems Command, Department of the Navy, and is available for use by all Departments and Agencies of the Department of Defense.

1. SCOPE

1 1 Scope. This specification covers the type 5B5,000H resilient mount assembly together with tests for evaluating the rubber stocks and the completely assembled mount. This mount has an assigned capacity of 3,500 to 5,000 pounds and a resonant frequency of 5 ± 1 hertz over this load range.

2. APPLICABLE DOCUMENTS

2.1 Government documents.

2.1.1 Specifications, standards and handbooks. The following specifications standards and handbooks form a part of this document to the extent specified herein. Unless otherwise specified, the issues of these documents shall be those listed in the issue of the Department of Defense Index of Specifications and Standards (DODISS) and supplement thereto, cited in the solicitation (see 6.2).

SPECIFICATIONS

FEDERAL

PPP-F-320 - Fiberboard: Corrugated and Solid, Sheet Stock (Contaner Grade), and Cut Shapes.

MILITARY

MIL-P-116 - Preservation, Methods Of.
MIL-M-17185 - Mounts, Resilient, General Specifications and Tests For (Shipboard Application).
MIL-L-19140 - Lumber and Plywood Fire-Retardant Treated.

Beneficial comments (recommendations, additions, deletions) and any pertinent data which may be of use in improving this document should be addressed to: Commander, Naval Sea Systems Command, SEA 55Z3, Department of the Navy, Washington, DC 20362-5101 by using the self-addressed Standardization Document Improvement Proposal (DD Form 1426) appearing at the end of this document or by letter.

AMSC N/A FSC 5340

DISTRIBUTION STATEMENT A. Approved for public release; distribution is unlimited.

Downloaded from http://www.everyspec.com

STANDARDS

FEDERAL

FED-STD-313 - Material Safety Data, Transportation and Disposal Data for Hazardous Material Furnished To Government Activities.

MILITARY

MIL-STD-407 - Visual Inspection Guide for Rubber Molded Items.
MIL-STD-1186 - Cushioning, Anchoring, Bracing, Blocking and Waterproofing with Appropriate Test Methods.
MIL-STD-2073-1 - DOD Materiel Procedures for Development and Application of Packaging Requirements.

(Unless otherwise indicated, copies of federal and military specifications, standards, and handbooks are available from the Standardization Documents Order Desk, Bldg 4D, 700 Robbins Avenue, Philadelphia, PA 19111-5094)

2.1.2 Other Government documents, drawings, and publications. The following other Government documents, drawings, and publications form a part of this document to the extent specified herein. Unless otherwise specified, the issues are those cited in the solicitation.

DRAWING

NAVAL SEA SYSTEMS COMMAND (NAVSEA)

NAVSHIPS 803-1385709 - Mount, Resilient Type 5B5,000H and Auxiliary Snubbers.

(Application for copies should be addressed to Commander, Portsmouth Naval Shipyard, Naval Engineering Drawing Support Activity, Code 202.2, Portsmouth, NH 03801.)

DEPARTMENT OF LABOR

Code of Federal Regulations, Title 29, Part 1910 - Occupational Safety and Health Standards

(Application for copies should be addressed to the Superintendent of Documents, U.S. Government Printing Office, Washington, DC 20402.)

2.2 Non-Government publications. The following documents form a part of this document to the extent specified herein. Unless otherwise specified, the issues of the documents which are DOD adopted are those listed in the issue of the DODISS cited in the solicitation. Unless otherwise specified, the issues of documents not listed in the DODISS are the issues of the documents cited in the solicitation (see 6.2).

Downloaded from http://www.everyspec.com

AMERICAN NATIONAL STANDARDS INSTITUTE (ANSI)
ACOUSTICAL SOCIETY OF AMERICA (ASA)

ANSI S2 31 (ASA 31) - Methods for the Experimental Determination of Mechanical Mobility. Part 1: Basic Definitions and Transducers.

ANSI S2.32 (ASA 32) - Methods for the Experimental Determination of Mechanical Mobility. Part 2: Measurements Using Single-Point Translational Excitation.

INTERNATIONAL ORGANIZATION FOR STANDARDIZATION (ISO)

ISO 2856 - Elastomers - General Requirements for Dynamic Testing.

(Application for copies should be addressed to the Acoustical Society of America, 335 East 45th Street, New York, NY 10017.)

AMERICAN SOCIETY FOR TESTING AND MATERIALS (ASTM)

D 395 - Standard Test Methods for Rubber Property - Compression Set. (DOD adopted)

D 412 - Standard Test Method For Rubber Properties in Tension. (DOD adopted)

D 429 - Standard Test Methods For Rubber Property - Adhesion to Rigid Substrates. (DOD adopted)

D 471 - Standard Test Methods For Rubber Property - Effect of Liquids. (DOD adopted)

D 573 - Standard Test Methods For Rubber - Deterioration in an Air Oven. (DOD adopted)

D 792 - Standard Test Methods For Specific Gravity and Density of Plastics by Displacement. (DOD adopted)

D 1005 - Standard Test Methods for Measurement of Dry-Film Thickness of Organic Coatings Using Micrometers. (DOD adopted)

D 1054 - Standard Test Methods for Rubber Property - Resilience Using a Rebound Pendulum.

D 1149 - Standard Test Methods for Rubber Deterioration - Surface Ozone Cracking in a Chamber. (DOD adopted)

D 1186 - Standard Test Methods for Nonmagnetic Coatings Applied to Ferrous Base. (DOD adopted)

D 1229 - Standard Test Methods for Rubber Property - Compression Set at Low Temperatures. (DOD adopted)

D 1400 - Standard Test Methods for Nondestructive Measurement of Dry Film Thickness of Nonconductive Coatings Applied to a Nonferrous Metal Base.

D 2231 - Standard Practice for Rubber Properties in Forced Vibration. (DOD adopted)

D 2240 - Standard Test Method For Rubber Property - Durometer Hardness (DOD adopted)

D 3951 - Standard Practice for Commercial Packing. (DOD adopted)

Downloaded from http://www.everyspec.com

(Application for copies should be addressed to the American Society for Testing and Materials, 1916 Race Street, Philadelphia, PA 19103.)

(Non-Government standards and other publications are normally available from the organizations that prepare or distribute the documents. These documents also may be available in or through libraries or other informational services.)

2.3 Order of precedence. In the event of a conflict between the text of this document and the references cited herein (except for related associated detail specifications, specification sheets or MS standards), the text of this document takes precedence. Nothing in this document, however, supersedes applicable laws and regulations unless a specific exemption has been obtained.

3. REQUIREMENTS

3.1 Qualification. The mounts furnished under this specification shall be products which are authorized by the qualifying activity for listing on the applicable qualified products list at the time of award of contract (see 4.3 and 6.4).

3.2 Materials. Materials shall meet the requirements specified in 3.2 1 through 3.2.3.

3.2.1 Metal. The metal components of the mount shall be that specified on the drawing for the mount. The contracting activity shall specify (see 6 2) whether the mount shall be manufactured from steel or manganese bronze as shown on Drawing 803-1385709. The metal components for this mount shall be formed to shape and finish in accordance with the dimensions and allowable tolerances specified by the applicable drawing.

3.2.2 Rubber resilient elements. The load carrying resilient element of the 5B5,000H mount shall be a compound using natural rubber (see 6 9 and 6.10) as the basic material. The natural rubber components shall be coated with an oil and ozone resistant compound (see 6 8 and 6.10). The mount components shall be molded to the specified form shown on Drawing 803-1385709. The rubber auxiliary snubber and main snubber components shall be fabricated of an oil and ozone resistant compound (see 6.9 and 6.10), utilizing polymerized chloroprene or a copolymer product of butadiene and acrylonitrile as the basic material molded to the specified form as shown on Drawing 803-1385709.

3.2.2.1 Porosity and delamination. The rubber elements of the finished mount shall not have any porosity, air pockets, or delamination in any portion.

3.2.2.2 Bond. The rubber elements shall be bonded to metal components as specified on Drawing 803-1385709.

3.2.2.3 Surface condition. There shall not be any backrinding, blisters, or other defects on the outer surfaces of the rubber elements of the finished mount

3.2.2.4 Physical requirements. Resilient elements shall meet the physical requirements specified in 3.2.2 4.1 through 3.2.2 4.2

Downloaded from http://www.everyspec.com

3 2.2.4.1 Rubber stocks. The vulcanized rubber stocks used for the resilient elements, main snubbers, and auxiliary snubbers shall conform to the physical requirements specified in table I. Suggested rubber compounds meeting these requirements are specified in 6.9

TABLE I. Physical requirements for rubber compounds in mount components.

Properties	Resilient element	Main snubbers	Auxiliary snubbers	Test method
Tensile strength, lb/in^2 (minimum)				
Before aging	2800	2300	1900	4 6.2
After aging at 194°F for 46 hours	2200	2300	1900	4.6.4
Elongation at break, percent (minimum)				
Before aging	500	250	400	4.6.2
After aging at 194°F for 46 hours	450	180	370	4.6.4
Compression set after oven aging, percent (maximum)	35	---	---	4.6.3.1
Cold compresssion set, percent (maximum)	25	---	---	4.6.3.2
Adhesion of resilient element to metal, lb/in^2 (minimum)	550	450	450	4.6.7
Hardness, Shore (Type A durometer) after 3 seconds	50 ± 5	85 ± 5	60 ± 5	4.6.5
Resistance to oil, increase in volume, percent (maximum)	---	10	10	4 6.6.1
Impact resilience, percent (maximum)	---	30	38	4.6.11

3.2.2.4.2 Oil and ozone resistant coating. The oil and ozone resistant coating shall conform to the physical requirements specified in table II. Suggested formulations and application procedures are specified in 6.8.

TABLE II. Physical requirements for the oil and ozone resistant coating.

Property	Requirement	Test method
Tensile properties of dried film		
Tensile strength, lb/in^2 (minimum)	2000	4.6.2
Elongation at break, percent (minimum)	400	
Properties of coated test specimens		
Resistance to oil, increase in volume, percent (maximum)	5	4 6 6.2

Downloaded from http://www.everyspec.com

TABLE II. Physical requirements for the oil and ozone resistant coating. - Continued

Property	Requirement	Test method
Adhesion to resilient element stock	No cracks, breaks, tears, or blisters conducive to peeling off coating by hand either before or after immersion in oil.	4.6.7.2
Ozone resistance	No cracks	4.6.8
Flexibility of coating	No cracks	4.6.9
Properties of coated mount		
Appearance	No blisters or other defects	4.4.3.3
Film thickness (as measured on coated steel) (minimum)	0.003 inch	4.6.10

3.2.2.5 Specific gravity. The specific gravity of the rubber compounds used for the resilient element, main snubber, and auxiliary snubber shall be determined in accordance with 4.6.12. The specific gravity found during qualification inspection of the contractors rubber compounds shall be recorded as a requirement with a tolerance of plus or minus 0.03 for subsequent quality conformance testing of the contractors rubber compounds.

3 2 3 Protective treatment The metal components used in the manufacture of the mount shall be resistant to, or protected against, corrosion by salt water or spray or other atmospheric conditions encountered in service. Unless otherwise specified (see 6.2), the minimum protective treatment shall be that specified on the mount drawing.

3.3 Recovered materials. Unless otherwise specified herein, all equipment, material, and articles incorporated in the products covered by this specification shall be new and shall be fabricated using materials produced from recovered materials to the maximum extent practicable without jeopardizing the intended use. The term "recovered materials" means materials which have been collected or recovered from solid waste and reprocessed to become a source of raw materials, as opposed to virgin raw materials. None of the above shall be interpreted to mean that the use of used or rebuilt products is allowed under this specification unless otherwise specifically specified.

3.4 Finished mounts. Finished mounts shall meet the requirements specified in 3.4.1 through 3.7.

3.4.1 Dynamic stiffness. The dynamic stiffness of the 5B5,000H mount when tested in the axial direction, in accordance with 4 6.14, shall be within the specified limits of table III.

Downloaded from http://www.everyspec.com

TABLE III. Axial dynamic stiffness requirments for 5B5,000H mount.

Mount	Test load pounds	Dynamic stiffness requirement, lb/in^2
5B5,000H	3500 5000	5716 - 12861 8166 - 18373

3.4.2 Deflection at 5,000 pounds load. The mount shall not deflect more than 0.64 inch when tested as specified in 4.6.13. It shall not show any breaks, cracks, tears, or separation between the component parts.

3 4 3 Uniformity. The resonant frequency of the mount when tested in either the axial or transverse direction (see 6.5.1 and 6.5.2) shall be 5 ± 1 hertz both when supporting axial loads of 3,500 and 5,000 pounds. Under the above loading conditions, the mount when tested in the longitudinal direction (see 6.5.3) shall have resonant frequencies within the frequency range of 2.75 ± 1 hertz. Unless otherwise specified (see 6.2), the uniformity test shall be conducted only in the axial direction (see 6.5.1). The testing procedure is specified in 4.6.15.

3.4.4 Static load deflection. The mount shall not show any separation, crack, tear, or break between component parts or appreciable permanent deformation of metal parts (see 4.6.16).

3.4.5 Drift. The mount shall not drift more than 0.045 inch under a 5,000 pound load and the natural frequency shall not exceed 6.0 hertz after the drift test (see 4.6.17).

3.4.6 Porosity and delamination. The mount shall not show evidence of porosity in the rubber nor separation of the rubber into distinct layers or laminations (see 4.6.18).

3.5 Identification. Each mount shall be identified with the markings specified on Drawing 803-1385709.

3.6 Mount design. The mount shall conform to all applicable details shown on Drawing 803-1385709. The mount shall be furnished with the six mounting hole configuration in the channel unless the four hole configuration is specified (see 6.2).

3.7 Workmanship. The workmanship shall be uniform in quality and the surface shall not contain any foreign matter, corrosion, or defects, such as perforations, sharp edges or corners, seams, cracks, laps, dents, raised metal, nicks, scratches, burrs, or other defects that adversely affect performance.

3.8 Toxicity. The resilient materials and the oil-ozone resistant coating shall have no adverse effect on the health of personnel when properly used for its intended purpose. The resilient materials and the oil-ozone resistant coating shall contain no components which produce noxious vapors in such

Downloaded from http://www.everyspec.com

concentrations as to be an annoyance to personnel during formulation or use under conditions of adequate ventilation while exercising caution to avoid prolonged contact with the skin and while observing Occupational Safety and Health Administration (OSHA) guidelines. Questions pertaining to the toxic effects shall be referred by the contracting activity to the Naval Medical Command (NAVMEDCOM), Washington, DC, who will act as a medical advisor to the contracting activity.

3.8.1 Material safety data sheet (MSDS). The contracting activity shall be provided a material safety data sheet at the time of contract award. The MSDS shall be provided in accordance with the requirements of FED-STD-313. The MSDS shall be included with each shipment of the material covered by this specification (see 6.11).

4 QUALITY ASSURANCE PROVISIONS

4.1 Responsibility for inspection Unless otherwise specified in the contract or purchase order, the contractor is responsible for the performance of all inspection requirements (examinations and tests) as specified herein. Except as otherwise specified in the contract or purchase order, the contractor may use his own or any other facilities suitable for the performance of the inspection requirements specified herein, unless disapproved by the Government. The Government reserves the right to perform any of the inspections set forth in this specification where such inspections are deemed necessary to ensure supplies and services conform to prescribed requirements.

4 1.1 Responsibility for compliance All items shall meet all requirements of sections 3 and 5. The inspection set forth in this specification shall become a part of the contractors overall inspection system or quality program. The absence of any inspection requirements in the specification shall not relieve the contractor of the responsibility of ensuring that all products or supplies submitted to the Government for acceptance comply with all requirements of the contract. Sampling inspection, as part of the manufacturing operations, is an acceptable practice to ascertain conformance to requirements, however, this does not authorize submission of known defective material, either indicated or actual, nor does it commit the Government to accept defective material.

4 2 Classification of inspections. The inspection requirements specified herein are classified as follows:

(a) Qualification inspection (see 4.3).
(b) Quality conformance inspection (see 4.4).

4.3 Qualification inspection Qualification inspection shall be conducted at a laboratory satisfactory to NAVSEA (see 6.3). Qualificaiton inspection shall consist of the tests specified in 4.3.2 through 4.3.3.

4.3.1 Samples for qualification tests Samples for qualification tests shall be as specified in 4.3.1.1 and 4.3.1.2.

Downloaded from http://www.everyspec.com

4.3.1.1 Rubber samples. For the tests specified in 4.3.2, the contractor shall provide samples as specified in table IV manufactured from each rubber stock (resilient element, main snubber, and auxiliary snubber), as specified in 3.2.2.1.

TABLE IV. Rubber samples for qualification tests.

Quantity	Sample	Sample size	Property to be measured
3	Sheet samples	0.08 ± 0.01 x 6 x 6 inch (2 ± 0.25 x 150 x 150 mm)	tensile strength ultimate elongation specific gravity
6	Cylinder or disc of resilient element stock	0.05 ± 0.02 inch thick x 1.14 ± 0.02 inch diameter (12.5 ± 0.5 mm thick x 29.0 ± 0.5 mm diameter)	compression set (3 samples) hardness (3 samples)
3	Metal adhesion samples	in accordance with ASTM D 429, method A	rubber-to-metal adhesion
2	Rectangular blocks of decelerator and auxiliary snubber stock	1 x 1 x 2 inches (25 X 25 x 50 mm)	resilience
3	Sheet samples of decelerator and auxiliary snubber stock	0.08 ± 0.01 x 1 x 2 inch (2 ± 0.25 x 25 x 50 mm)	resistance to oil
6	Sheet samples of resilient element stock with oil and ozone resistant coating	0.08 ± 0 01 x 1 x 2 inch (2 ± 0.25 x 25 x 50 mm)	resistance to oil (3 samples) adhesion to resilient element stock (3 samples)
3	Sheet samples of resilient element stock covered with oil and ozone resistant coating	0.08 ± 0.01 x 1 x 6 inch (2 ± 0.25 x 25 x 150 mm)	ozone resistance (2 samples) flexibility of coating (1 sample)
1	Sample of oil and ozone resistant coating	0.006 ± 0.003 x 6 x 6 inch (0 152 ± 0 08 x 150 x 150 mm)	tensile strength ultimate elongation

Downloaded from http://www.everyspec.com

4.3.1.2 Mount samples. If the rubber samples specified in 4.3 1.1 meet the requirements specified herein, the contractor shall then conduct the tests specified in 4.3.3 using four complete mounts with main snubbers and auxiliary snubbers, if applicable (see 6.6), manufactured from the respective rubber stock.

4.3.2 Qualification tests on rubber stock samples. The rubber stock samples specified in 4.3.1.1 shall meet the physical requirements listed in table I, when subjected to the following tests:

Initial tensile strength	4.6 2
Initial ultimate elongation	4.6.2
Tensile strength after oven aging	4 6 2 and 4.6.4
Ultimate elongation after oven aging	4.6.2 and 4 6.4
Compression set after oven aging	4.6.3 1 and 4.6.4
Cold compression set	4.6.3 2
Resistance to oil	4 6 6 1
Adhesion to metal	4.6.7
Impact resilience	4.6.11
Hardness	4.6.5
Specific gravity	4.6.12

4.3.2.1 Qualification tests on oil and ozone resistant coating. The oil and ozone resistant coated samples specified in 4.3.1.1 shall be subjected to the following tests:

Tensile strength of dried film	4 6 2
Elongation of dried film	4.6.2
Resistance to oil	4.6.6 2
Adhesion to resilient element stock	4 6 7 2
Ozone resistance	4.6.8
Flexibility	4.6.9

4.3.3 Qualification inspection on the finished mounts. Qualification inspection on finished mounts shall be specified in (a) and (b).

(a) Two of the mount samples specified in 4.3.1.2 shall be subjected to the following examination and tests·

Examination	4.4.2	3.5, 3.6, 3.7
Deflection at 5,000 pounds load	4.6 13	3.4.2
Dynamic stiffness	4.6.14	3.4.1
Uniformity	4.6.15	3.4.3
Static load-deflection	4.6.16	3.4.4
Film thickness of oil and ozone resistant coating	4 6.10	table II

(b) The remaining two mount samples specified in 4 3.1 2 shall be subjected to the following examination and tests:

Examination	4 4 2	3 5, 3 6, 3.7

Downloaded from http://www.everyspec.com

Deflection at 5,000 pounds load	4.6.13	3.4.2
Dynamic stiffness	4.6.14	3.4.1
Uniformity	4.6.15	3.4.3
Drift	4.6.17	3.4.5
Porosity and delamination	4.6.18	3.2.2.1

4 3 4 Nonconformance to qualification tests. If any of the samples subjected to the qualification tests fail to meet the requirments of this specification, the manufacturer shall not be considered to have qualified for manufacture of these mounts. Further qualification attempts may be made in accordance with "Provisions Governing Qualification SD-6" (see 6.4.1).

4 4 Quality conformance inspection. Quality conformance inspection shall consist of the examination and the tests of sample units as specified herein.

4 4.1 Sampling for quality conformance inspection. As a minimum, the contractor shall inspect a sample quantity of mounts from each lot in accordance with the sampling plan specified herein. Sample size depends on classification of the characteristic (defect) as shown in table VII. The sample size for critical, major and minor characteristics is shown in table V below. If one or more defects is found in any sample, the entire lot shall be rejected and screened 100 percent by the contractor for the defect found.

TABLE V. Sample size for quality conformance inspection.

Lot size	Critical Characteristic	Major Characteristic	Minor Characteristic
2 to 8	All	All	3
9 to 15	All	All	3
16 to 25	All	20	3
26 to 50	All	20	5
51 to 90	All	20	6
91 to 150	125	20	7
151 to 280	125	20	10
281 to 500	125	47	11
501 to 1200	125	47	15
1201 to 3200	125	53	18
3201 to 10,000	192	68	22
10,001 to 35,000	294	77	29
35,000 to 150,000	294	96	29

4.4.1.1 Lot. For the purpose of quality conformance inspection and sampling, a lot shall consist of all the mounts of one type, design, and load rating offered for delivery. A lot shall not exceed 300 mounts. A lot serial number shall be assigned to each mount. The lot serial number shall not be repeated in any one quarter The serial number shall be traceable to the rubber batch numbers, the manufacturing and process records against which the mounts and snubbers were manufactured, and all quality conformance requirements as required

Downloaded from http://www.everyspec.com

by this specification. The lot serial number shall be specified on all shipping documents sent to the receiving facility, as well as on all packages and shipping containers (see 5.4).

4.4.2 Quality conformace tests on rubber stock. Samples of rubber stock shall meet the physical requirements listed in table I, when subjected to the tests specified in table VI.

TABLE VI. Samples and tests on rubber stock.

Sample	Quantity	Property	Test
Sheet 0.08 ± 0.010 x 6 x 6 inch 2.0 ± 0.2 z 150 z 150 mm)	2	Tensile strength Ultimate elongation Specific gravity	4.6.2 4.6.2 4 6.12
Slab or disc 0.5 ± 0.02 inch thick x 1.14 ± 0.02 inch diameter (12.5 ± 0.5 mm thick x 29 0 ± 0.5 mm diameter)	1	Hardness Compression set	4.6.5 4.6.3

4.4.3 Quality conformance tests on mounts.

4.4 3.1 Initial quality conformance test. Prior to sampling for quality conformance tests, all mounts in the lot shall meet the requirements for deflection and shall not exhibit any defects (see 3.4.2) when tested as specified in 4.6.13. All mounts that do not meet this requirement shall be removed from the lot and shall not be used for quality conformance testing.

4.4.3.2 Quality conformance sampling plan. The quality conformance sampling plan for the examination and tests, including the acceptance and rejection levels, shall be specified in the acquisition document (see 6 2).

4.4.3.3 Visual and dimensional examination. Each of the sample mounts shall be visually and dimensionally examined to verify compliance with this specification. Defects shall be determined and evaluated through visual examination as specified in MIL-STD-407. The classification for defects are as shown in table VII.

Downloaded from http://www.everyspec.com

TABLE VII Classification of defects.

Categories	Defects
Critical:	
1	None defined.
Major:	
101	Evidence of use of unauthorized materials.
102	Resilient element not molded to specified form on approved drawings.
103	Evidence of delamination or air pockets in rubber elements of finished product.
104	Rubber elements not bonded to steel components in conformance with approved drawing.
105	Evidence of backrinding and blisters on outer surfaces of finished mount.
106	Steel components not protected from corrosion by salt water or spray or other atmospheric conditions encountered in service.
107	Dimensions, length, width, and height and configuration not in conformance with approved drawing.
108	Any other defect which would affect the serviceability of the mount.
Minor:	
201	Identification marking not in conformance with approved drawing.
202	Burrs, rough edges and sharp corners not removed.
203	Any other defect which would not affect the serviceability of the mount.

4.4.3.4 Physical tests on mounts. The samples selected shall be subjected to the tests specified in table VIII in the order listed.

TABLE VIII. Physical tests on mounts.

Uniformity	4.6.15
Static load-deflection	4.6.16
Film thickness of oil and ozone resistant coating	4.6.10
Porosity and delamination[1]	4.6.18
Visual or dimensional	4.4.3 3

[1] Only one sample per lot shall be subjected to this test

Downloaded from http://www.everyspec.com

4 4 3.5 Conforming mounts. Every mount that passes the requirements for quality conformance tests, except the one that is destroyed for the porosity and delamination test, shall be returned to the lot.

4.5 Confirmation of quality. When deemed necessary by NAVSEA or the inspector, samples of the mount shall be selected and forwarded to a laboratory satisfactory to NAVSEA. These samples shall be subjected to any test considered necessary by NAVSEA to determine that the samples are equal to the samples upon which qualification was based. If an unsatisfactory report is obtained, the laboratory shall immediately notify NAVSEA.

4 6 Method of tests. Test methods shall be as specified in 4.6 1 through 4.6.18

4 6.1 Standard test conditions. Tests shall be made within an ambient temperature range of 75 ± 5°F (23.9 ± 2.8°C) unless otherwise specified.

4 6.2 Tensile strength and ultimate elongation tests. Tensile strength and ultimate elongation tests shall be conducted in accordance with ASTM D 412, method A. Use standard Die C for cutting dumbbell specimens.

4.6.3 Compression set. Compression set shall be as specified in 4.6.3.1 and 4.6.3.2.

4.6.3.1 Compression set after oven aging Compression set shall be determined in accordance with method B of ASTM D 395, except oven aging shall be as specified in 4.6 4

4.6.3.2 Cold compression set. Cold compression set shall be determined in accordance with ASTM D 1229, except the exposure shall be at 30 ± 2°F (-1 ± 1°C) for 94 ± 1/2 hours. Compression set shall be determined 30 minutes after release from compression.

4 6.4 Oven aging test. The specimens for tensile, ultimate elongation, and compression set tests shall be oven aged in accordance with ASTM D 573 at a temperature of 194 ± 2°F (90 ± 1°C) for 46 ± 1/4 hours. Final determination of aged tensile and ultimate elongation specimens shall be made not less than 16 hours nor more than 48 hours after removal from the oven. Tensile and ultimate elongation tests on unaged specimens shall be made immediately prior to, and on the same machine as, the tensile tests on the oven aged specimens (see 4.6.2).

4.6.5 Hardness test. The hardness of the 0 50 inch (12 5 mm) thick rubber specimens shall be determine in accordance with ASTM D 2240 with a type A shore durometer. A 3-second reading shall be taken.

4 6.6 Resistance to oil. Resistance to oil tests shall be as specified in 4 6 6.1 and 4 6.6.2.

Downloaded from http://www.everyspec.com

4.6.6.1 Uncoated specimen. The increase in volume of the rubber specimens due to immersion in oil shall be determined in accordance with ASTM D 471, except the thickness of the specimens shall be 0.08 ± 0.01 inch. The specimens shall be immersed in reference oil No. 3 as specified in ASTM D 471 for a period of 46 ± 1/4 hours at 73 ± 2°F (22.8 ± 1°C).

4.6.6.2 Coated specimen. The increase in volume of the coated specimens due to immersion in oil shall be determined in accordance with ASTM D 471, except the coated specimens shall be as specified in table IV and the immersion period shall be 70 ± 1/4 hours at 158 ± 2°F (70 ± 1°C). The specimens shall be immersed in reference oil No. 3 as specified in ASTM D 471.

4 6.7 Adhesion tests. Adhesion tests shall be as specified in 4.6.7.1 and 4.6.7.2.

4.6.7.1 Adhesion to metal. The adhesion tests shall be in accordance with method A of ASTM D 429. Three specimens of each rubber stock shall be tested and the results averaged for each stock.

4.6.7.2 Adhesion of oil and ozone resistant coating. The adhesion of the oil and ozone resistant coating to three 0.08 by 1 by 2 inch samples of the resilient rubber specimens (see table IV) shall be determined before and after immersion in oil (see 4.6.6.2). Each coated specimen shall be flexed, elongated by hand, and then visually examined for adhesion failures. The coated specimens shall not exhibit cracks, breaks, tears, blisters, or other defects conducive to peeling of the coating by hand, either before or after immersion in oil.

4 6.8 Ozone resistance. The ozone resistance of the coated resilient components of the mounts shall be determined on two coated 1 by 6 by 0.08 inch thick specimens (see table IV). The specimens shall be elongated to 20 percent extension. A thin layer of melted paraffin wax shall be applied to each of the four surfaces of the stretched specimens in an area where it is clamped, but not exceeding a 1/4 inch (6 mm) width from the clamps. The stretched specimens shall be conditioned for 16 ± 2 hours at 104 ± 4°F (40 ± 2°C) before being exposed, in accordance with ASTM D 1149. The concentration of ozone shall be 1± 0.10 parts per million (ppm) by volume, the temperature shall be 104 ± 4°F (40 ± 2°C), and the period of exposure shall be 168 hours. Observation magnification shall be 7X.

4.6.9 Flexibility of the coating. The flexibility of a coated 1 by 6 by 0.08 inch resilient element rubber specimen specified in table IV shall be determined. Each specimen shall be clamped in a universal test machine and a tensile force applied to elongate the specimen 100 percent at a loading rate of 20 inches per minute. The force shall then be released so that the specimen is no longer elongated. The cycle shall be repeated six times. The coated specimens shall be visually examined and shall exhibt no cracks, breaks, tears, or blisters.

4.6.10 Film thickness of the oil and ozone resistant coating The film thickness of the oil and ozone coating shall be measured on the coated metal steel plate to determine conformance with the requirement of table II. The thickness of the coating shall be determined by either: using a magnetic type thickness gauge

Downloaded from http://www.everyspec.com

in accordance with ASTM D 1186, using a micrometer to measure the thickness of the steel plate before and after the coating is applied, or by other valid and accurate procedures. (The manufacturer shall not determine the coating thickness by measuring the thickness of different coated and uncoated steel plates, unless he demonstrates that his procedure is valid and accurate.)

4.6.11 Impact resilience test. Impact resilience tests shall be in accordance with ASTM D 1054. Two specimens shall be tested and the results averaged.

4.6.12 Specific gravity. The specific gravity of the rubber samples shall be determined according to ASTM D 792 on specimens cut from 0 08 by 6 by 6 inch (2 by 150 by 150 mm) sheets. The average of three measurements shall be used to determine conformance with 3.2.2.5.

4.6.13 Test for deflection at 5,000 pounds load. A universal type testing machine shall be used. A mount without snubber cones shall be secured on a jig. It shall be subjected to four loading cycles in the axial direction (see 6.5.1). Three loadings shall be at a rate not greater than 0.3 inch per minute. The fourth loading cycle shall be at a rate of 0.05 inch per minute. The deflection at 5,000 pounds load for the fourth loading cycle shall be measured to the closest 0.001 inch. While deflected, the mount shall be examined for a break or separation between the component parts.

4.6.14 Dynamic stiffness test. Dynamic stiffness shall be measured for the mount in the axial direction at loads of 3,500 and 5,000 pounds to determine conformance with 3.4.1.

4.6.14.1 General procedure. There are two basic types of tests for determining these properties: resonant and nonresonant methods. An example of each method is given in 4.6.14.2 and 4.6.14.3. Although the manufacturer is not required to use these exact procedures, his test procedures shall follow the guidelines given in ASTM D 2231 and ISO 2856, and in addition, where mechanical mobility is measured, ASA 31 and ASA 32. In accordance with ASTM D 2231, instrumentation should have the following general characteristics:

(a) Adequate sensitivity and resolution for transducers, signal conditioners, and readout instrumentation
(b) Adequate dynamic range and signal to noise ratio for the range of specimen stiffnesses to be measured.
(c) Flat frequency response and good amplitude linearity within the range of measurements.
(d) Essentially no zero drift or calibration change within the test period.
(e) Low sensitivity to changes in temperature.

The test machine should be decoupled from the floor with soft mounts where possible to minimize the effect of background vibration on the measurement results. The components of the test machine in series with the specimens should be very stiff to minimize systematic error in the measurement Where systematic

Downloaded from http://www.everyspec.com

error in the dynamic stiffness measurement due to machine flexibility exceeds 1 percent, the results should be corrected for this effect (see 4.6.14 4.4). For both resonant and nonresonant tests, the measurements shall be conducted using sinusoidal vibration with a displacement amplitude of approximately 0.008 inches (0.2 mm) peak-to-peak. For nonresonant tests, the nominal frequency of excitation shall be 6 hertz for all mounts except the 7E450, 7E450BB, and 5E3500 mounts where the nominal shall be 7 hertz and 5 hertz respectively. When qualifying the manufacturer shall include a detailed description of his test equipment and procedures used to measure dynamic stiffness or resonance frequency. The Government reserves the right to perform these tests on mounts offered for qualification.

4.6.14.2 Resonant methods. Figure 1 shows a typical apparatus for the direct measurement of resonance frequency of a mount. The test load is applied to the mount by weights suspended from a steel rod. The system is excited with an electromagnetic shaker and impedance head attached to the bottom of the rod using swept sinusoidal vibration with a sweep rate low enough to achieve quasi-steady-state response. The instrumentation of figure 1 is used to measure the ratio of velocity to force, or mechanical mobility of the system. (Alternatively the ratio of acceleration to force (accelerance) or displacement to force (dynamic compliance) could be used in lieu of mobility.) The fundamental resonance frequency of the system occurs at the lowest frequency corresponding to a maximum in the mobility, accelerance, or dynamic compliance ratios as applicable. Because of flexibility in the components of the test apparatus that are in series with the mount (test frame, hanger rod, and so forth), the system resonance frequency that is measured will be lower than the (true) resonance frequency of the mount-mass system that would be measured with a rigid apparatus Where such systematic error in measuring resonance frequency exceeds 1 percent, the measurement must be corrected to determine conformance with 3.4.1. A procedure for obtaining the corrected resonance frequency is given in 4.6.14.4.4. It is noted that for the measurement error to be less than 1 percent (and not require correction), the static stiffness of the test apparatus must be at least 50 times greater than the dynamic stiffness of the mount being tested. In practice, most measurements made using the system of figure 1 to test mounts will require correction since the stiffness of the hanger rod itself, usually the most flexible element of the system, is generally less than 50 times stiffer than the mount. In no case, however, shall measurement systems be used which result in stiffness ratios less than 30.

4.6.14.2.1 Optional instrumentation. In lieu of using an impedance head as shown in figure 1, separate force and motion transducers may be used. One such system operates in a closed loop mode using the signal from the force transducer to control a shaker and maintain constant input force to the system while conducting the frequency sweep. The frequency at which the signal from the motion transducer is a maximum is considered to be the system resonance frequency. The requirements as in 4.6.14.2 apply in determining if a correction must be made to the measurements in determining conformance with 3.4.1.

4.6.14.3 Nonresonant methods. These methods are based on the transmitted force principle and used a linear dynamic model consisting of a parallel combination of an ideal spring and dashpot to represent an elastomeric specimen. Although a more exact model includes a mass term, it may be omitted with

Downloaded from http://www.everyspec.com

negligible error for relatively light specimens, stiff load cells, and low excitation frequencies. The method requires the measurement of two independent quantities: the sinusoidal displacement or velocity across the specimen and the resulting force transmitted through the specimen as well as the phase relationship between them. A commonly used type of equipment for conducting such measurements is the closed-loop servohydraulic test machine shown schematically in figure 2. The machine consists of a load frame, hydraulic actuator, load cell, and associated hydraulic and electronic components which permits a static load to be applied to a rubber specimen while an oscillatory vibration is superimposed upon it. The machine operates in a closed-loop mode utilizing the feedback signal from either the force or motion transducer to control the hydraulic actuator. Tests are usually conducted in the force control mode so that a constant load is maintained on the specimen while it creeps. Electronic circuitry controlling the servo valve permits the operator to independently vary the vibration frequency, amplitude, and static load applied to the specimen. Dynamic stiffness is calculated from the measured force and displacement signals as follows:

$$K = (F/X) \cos$$

where: K = Uncorrected dynamic stiffness of specimen, lbf/in (kN/m).
F = Amplitude of sinusoidal force transmitted through the specimen, lbf (kN).
X = Amplitude of sinusoidal displacement applied to specimen, in (m).
ϕ = Phase angle between force and displacement phasors.
C = Scaling factor determined by the procedure given in 4.6.14.4.2.

As in the case of resonant testing, flexibility in components of the test apparatus that are in series with the specimen (primarily the load cell and test frame) can result in measured values of dynamic stiffness for the specimen that are lower than if the apparatus were rigid. Where an overall system calibration (which includes machine flexibility) using steel coil springs is not performed (see 4.6.14.4.2) and the basic sensitivities of the transducers are used instead to calculate dynamic stiffness, the measurements shall be corrected to determine conformance with 3.4.1 if the systematic error exceeds 1 percent. Procedures for correcting such errors are given in 4.6.14.4 4. For such systems it is noted that the static stiffness of the test apparatus must be at least 100 times the dynamic stiffness of the specimen in order to limit the error to 1 percent (and require no correction). Regardless of the type of calibration used, however, measurement systems which result in stiffness ratios less than 30 shall not be used.

4.6.14.4 Calibration of test systems. All systems used to conduct resonance frequency or dynamic stiffness measurements shall be calibrated before use. Although the calibrations discussed in this section are combined system calibrations, basic calibrations should be performed on the individual components of the measurement system (transducers, signal conditioners, and so forth) if difficulties are encountered with the combined system calibration and should in any case be conducted at regular intervals.

Downloaded from http://www.everyspec.com

4 6.14.4.1 Resonance frequency. For measurement of resonance frequency using mobility methods, the operational calibration procedures given in ASA 31 shall be followed. This method involves driving through the impedance head into a freely suspended mass while utilizing the same gains on the force and acceleration channel as will be used in later measurements. A scaling factor by which the measured mobility or accelerance shall be multiplied to obtain the correct value ($1/2\pi fm$) or $1/m$, as appropriate) for the known mass, m, is calculated and applied to the subsequent measurements.

4.6.14.4.2 Dynamic stiffness. For measurement of dynamic stiffness using servohydraulic test equipment, overall system calibration shall be performed using steel coil springs of known spring rate. Calibration springs shall be selected on the basis of linear force-deflection properties and shall be used alone or in parallel combinations to produce a spring rate comparable to the dynamic stiffness of the sample to be tested. The procedure is to load the spring(s) to a static load within its linear range and apply a sinusoidal vibration of approximately the same amplitude and frequency as will be used later in testing the mount samples. Using the same gains as for later measurement on samples, measure the transducer signals proportional to the amplitudes of the transmitted force, the displacement applied to the specimen, and their relative phase. These quantities may then be substituted into the equation of 4.6.14.3 to obtain a scaling factor by which the measured stiffness, K, shall be multiplied to equal the known spring rate of the calibration springs. The scaling factor is then applied to subsequent measurements on mount samples. When testing mounts that are softer or stiffer than the springs used to obtain the scaling factor, a new calibration should be conducted using springs of the appropriate stiffness in order to avoid overcorrecting or undercorrecting the measurements. This is especially important for measurement systems that approach the 30 to 1 minimum allowable stiffness ratio of 4.6.14.3.

4.6.14.4.3 Measurement of machine stiffness. The stiffness of those components of the test machine in series with the specimen shall be determined experimentally in accordance with the procedures of 4.6.14.4.3.1 or 4.6.14.4.3.2 as appropriate.

4.6.14.4.3.1 Resonant frequency test equipment. For test systems used to measure resonance frequency (figure 1), the rubber test specimen shall be replaced by a stiff steel spacer, the shaker and impedance head removed, and a downward force applied to the bottom of the hanger rod using a calibrated load cell or proving ring. Deflection at the bottom of the rod is measured with a dial indicator. The force applied shall be sufficient to insure good resolution for both the force and deflection readings. Several points shall be taken to insure that the force-deflection relationship is linear. The resulting spring rate of the system shall be used to determine if the measurement system meets the stiffness requirements of 4.6.14.2 as well as the amount (if any) of correction to to be applied to the resonance frequency measurements.

4 6.14.4.3.2 Dynamic stiffness test equipment. For test systems used to measure the dynamic stiffness of mounts (figure 2), test machine stiffness can be determined using the internal transducers of the machine itself. Operating in the

Downloaded from http://www.everyspec.com

load feedback mode with the displacement transducer on its most sensitive range and the force transducer on its full scale setting, bring the platens of the machine either directly in contact or against a stiff steel spacer separating the platens. [CAUTION: This procedure is not recommended for test machines not equipped with a safety interlock system to prevent the force from exceeding a predetermined value.] The force applied shall be sufficient to insure good resolution of both the force and deflection readout instruments (typically 70-80 percent of maximum capacity of the load cell). Several points shall be taken to insure that the force-deflection relationship is linear and that effects such as nonparallelism between the platens does not produce nonlinear results. The resulting spring rate of the system shall be used to determine if the measurement system meets the stiffness requirements of 4.6.14.3 as well as the amount (if any) of the correction to be applied to the dynamic stiffness measurements.

4.6.14.4.4 Correction for flexibility of test machine. When test machines fail to meet the minimum stiffness requirements for limiting measurement error to 1 percent (see 4.6.14 2 and 4.6.14.3) and, for dynamic stiffness measurement systems, where steel coil springs are not used as in 4.6.14.4 2 to conduct overall system calibrations, then the measurements must be corrected to determine conformance with 3.4.1. For purposes of this calculation, the components of the test machine in series with the sample can be considered as a single spring of known spring rate (4.6 14.4.3) in series with the true stiffness of the sample as follows:

$$1/K = 1/K_s + 1/K_M$$

where: K_s = True stiffness of sample (to be determined).
K_M = Spring rate of test machine from 4.6.14.4.3.
K = Combined stiffness of K_s and K_M (measured in 4 6.14.2 or 4.6.14.3).

For nonresonant tests the true stiffness of the sample, K_s, can be determined directly from the above equation since K is measured directly (4.6.14.3), and compared with the requirements of 3 4.1. However, for resonance frequency measurements, the system resonance frequency obtained in 4.6 14.2 must be converted to stiffness to obtain K for substitution into the previous equation. The following relation for a spring-mass system can be used for this conversion.

English system

$$K = 0.102f^2w$$

where:
K = dynamic stiffness of the sample, lbf/in
w = supported weight, lbf
f = resonance frequency of system, Hz

Metric system

$$K = 0.0395f^2m$$

where:
K = dynamic stiffness of sample, kN/m
m = supported mass, kg
f = resonance frequency of system, Hz

As was the case with nonresonant tests the value of K obtained can be substituted into the equation of 4.6 14.4.4 to obtain the true stiffness of the sample, K_s K_s can then either be used directly to determine conformance with 3 4 1 or it can

Downloaded from http://www.everyspec.com

be converted back into frequency using the previous relationship to obtain the corrected resonance frequency of the mount for comparison with the resonance frequency requirements of 3.4.1.

4.6.15 Uniformity tests. The uniformity of the mounts shall be evaluated by determining the resonant frequency of the mount only in the axial direction (see 6.5.1) under loads of 3,500 and 5,000 pounds. The resonant frequencies obtained on the mounts under the same load shall be averaged. The resonant frequencies shall be determined in accordance with 4.6.14. When conducting uniformity tests, precaution shall be exercised in selecting the proper amplitude to prevent the decelerator cones from impinging against the bottom portion of the rubber resilient element.

4.6.16 Static load-deflection tests. The mounts static load-deflection shall be determined as specified in 4.6.16 1 through 4.6 16.3.

4.6.16.1 Apparatus. A universal type testing machine shall be employed to conduct static load-deflection tests on the mounts. The testing machine shall be equipped with a control which will load the mount at a constant deflection rate, or if such equipment is not available, the increment load method specified in MIL-M-17185 shall be modified to give the loading specified in 4.6.16.2. Main snubbers shall be in place but auxiliary snubbers shall not be used.

4 6.16.2 Test in axial direction. Testing in the axial direction (see 6.5.1) on the universal testing machine shall be as specified in 4.6.16.2.1 and 4.6.16.2.2.

4.6.16.2.1 Qualification testing. When load-deflection tests are conducted in the axial direction, a single mount shall be secured in a jig and subjected to four loading and unloading cycles. For the first three loading cycles, the loads shall be applied at a deflection rate not exceeding 0.3 inch per minute up to the load specified on curve 2 of figure 3 for the upper load rating of the mount. For the fourth loading cycle, conducted at a rate of 0.05 inch per minute, the mount shall be loaded up to the peak load specified on curve 1 of figure 3 for the upper load rating of the mount. The fourth loading and unloading cycle shall be reported as the static load-deflection curve for the mount.

4.6.16.2.2 Quality conformance testing. The load-deflection test shall be as specified in 4.6.16.2.1 except that the mounts shall be subjected to four loading and unloading cycles in the axial direction. For each loading cycle, loads shall be applied up to the load specified on curve 2 of figure 3 for the upper load rating for the mount. The deflection rate shall not exceed 0.3 inch per minute.

4 6.16.3 Test in transverse and longitudinal directions. When load-deflection tests are conducted in a transverse or longitudinal direction (see 6.5.2 and 6.5.3), two mounts shall be secured in a jig similar to that shown on figure 4. Each mount shall be compressed axially to that amount which its upper load deflected the mount is during the static load-delection test in the axial direction This compression is obtained by adjusting the nuts on the four rods, which changes the distance between the channels of the mounts with respect to the

Downloaded from http://www.everyspec.com

plane of loading. After the two mounts have been assembled in the jig and secured, they shall be subjected to four loading and unloading cycles in accordance with the procedure specified in 4.6.16.2.

4.6.17 Drift test. The bottom portion of the rubber resilient element shall not touch the main snubbers during the drift test. The unloaded mount height shall be measured from an arbitrarily selected datum line, usually the base or top side of the channel web. A load of 5,000 pounds shall then be applied in the axial (vertical) direction on the mount. One hour after applying the load, the deflection of the mount from the no load position shall be measured in mils. Thereafter, drift and ambient air temperature measurements shall be made every hour for six hours followed by measurements at 24-hour intervals for at least 10 days The drift of the mount shall be the difference in deflection taken 1 hour after loading and 10 days after loading. At the end of this period, the mount shall be subjected to a vibration test in the axial direction and the resonant frequency determined under a load of 5,000 pounds (see 4.6.14). The load shall then be removed and the mount allowed to recover in height. After complete recovery, the unloaded height of the mount shall be measured.

4.6.18 Porosity and delamination. From each lot, one of the mounts previously used for static load-deflection tests shall be cut into two parts as shown in figure 5. The cut surfaces of the rubber shall be carefully examined for porosity. The parts shall be immersed in xylene for 24 hours. After removal from the xylene, the rubber parts of the mount shall be examined for evidence of separation into distinct layers or laminations.

4.7 Inspection of packaging Sample packs, and the inspection of the preservation, packing and marking for shipment, stowage, and storage shall be in accordance with the requirements of section 5 and the documents specified therein.

4.8 Toxicity. To determine conformance to the requirements of 3.4, the manufacturer of the material shall disclose the formulation of his product to the Naval Medical Command, MEDCOM-242, Washington, DC 20372. The disclosure of proprietary information, which shall be held in confidence by the Naval Medical Command, shall include: the name, formula, and approximate percentage by weight and volume of each ingredient in the product; the results of any toxicological testing of the product; identification of its pyrolysis products; and any such other information as may be needed to permit an accurate appraisal of any toxicity problem associated with the handling, storage, application, use, disposal, or combustion of the material.

5 PACKAGING

(The packaging requirements specified herein apply only for direct Government acquisition. For the extent of applicability of the packaging requirements of referenced documents listed in section 2, see 6.11.)

5 1 General.

Downloaded from http://www.everyspec.com

5.1.1 Navy shipyard stowage fire-retardant requirements.

(a) Treated lumber and plywood. Unless otherwise specified (see 6.2), all lumber and plywood including laminated veneer material used in shipping containers and pallet construction, members, blocking, bracing, and reinforcing shall be fire-retardant treated material conforming to MIL-L-19140 as follows:

Levels A and B	- Type II	- weather resistant.
	Category 1	- general use.
Level C	- Type I	- nonweather resistant.
	Category 1	- general use.

(b) Fiberboard. Fiberboard used in the construction of class-domestic, nonweather resistant fiberboard, cleated fiberboard boxes including interior packaging forms shall meet the flame spread index and the specific optic density requirements of PPP-F-320 and amendments thereto.

5.2 Preservation. Preservation shall be level A, C or commercial as specified (see 6.2).

5.2.1 Level A. Mounts shall be cleaned, dried and unit protected in accordance with method III requirements of MIL-P-116. To prevent the entrance of foreign material, all openings shall be sealed with the use of metal or plastic plugs or waterproof pressure-sensitive tape. Each mount shall be cushioned and placed in a unit container.

5 2.1.1 Unit pack. Unit packs (unit containers) shall conform to MIL-STD-2073-1; Appendix F, table I. Unless otherwise specified (see 6.2), container selection shall be at the contractors option. Containers shall be of type weather resistant and conform to closure method V in accordance with the appendix of the box specification.

5.2.2 Level C. Mounts shall be preserved as specified for Level A except that the unit containers specified in 5.2.1.1 shall be of the nonweather resistant type, class, or variety as applicable. Fiberboard box closure shall be in accordance with method I of the box specification, using pressure-sensitive tape.

5.2.3 Commercial. Commercial preservation shall be in accordance with ASTM D 3951.

5.3 Packing. Packing shall be level A, B, C, or commercial as specified (see 6.2).

5.3.1 General Shipping containers shall contain identical quantities of identical material and shall be of minimum weight and cube, similar construction, and of uniform size.

Downloaded from http://www.everyspec.com

5 3 2 Level A, B, and C containers. Material preserved as specified (see 5 2) shall be packed in shipping containers for the level of packing specified (see 6.2), in accordance with MIL-STD-2073-1; Appendix C, table VII. Unless otherwise specified (see 6.2), container selection shall be at the contractors option

5.3.2.1 Closure, gross weight and waterproofing.

5.3.2.1.1 Closure. Container closure, reinforcing, or banding shall be in accordance with the applicable container specification or appendix thereto, except that class weather-resistant fiberboard boxes shall be closed in accordance with method V and reinforced with nonmetallic or tape banding, and nonweater-resistant fiberboard boxes shall be closed in accordance with method I using pressure-sensitive tape.

5.3.2.1.2 Weight. Wood, plywood, and cleated type containers gross weight shall not exceed 200 pounds. Weight for fiberboard containers shall not exceed the weight limitations of the applicable box specification.

5.3.2.1.3 Waterproofing. Unless otherwise specified (see 6.2), level A and when specified (see 6.2), level B shipping containers shall be provided with caseliners, linings, wraps or shrouds in accordance with the waterproofing requirements of MIL-STD-1186.

5.3.3 Commercial. Material preserved as specified (see 6.2) shall be packed for shipment in accordance with ASTM D 3951.

5.3.3.1 Container modification. Shipping containers exceeding 200 pounds gross weight shall be provided with the minimum of 3 inch by 4 inch nominal wood skids laid flat, or a skid, or sill-type base that will support the material and facilitate handling by mechanical handling equipment during shipment.

5.4 Marking. Marking shall be as specified in 5.4.1.

5.4.1 Level A, B, C, and commercial. In addition to any special marking required (see 6.2), level A, B, and C interior packs and shipping containers shall be marked in accordance with MIL-STD-2073-1, Appendix F, and commercial interior packs and shipping containers shall be marked in accordance with ASTM D 3951. In addition, bar coding shall be applied in accordance with the marking requirements of MIL-STD-2073-1.

5.4.2 Special marking. Each unit pack and shipping container shall be plainly marked in black waterproof ink, shipping containers marked on two adjacent sides, with the following completed:

Mount Identification_____
Military Specification Number_____
Date of Manufacture_____
Lot Numbers_____

Downloaded from http://www.everyspec.com

6. NOTES

(This section contains information of a general or explanatory nature that may be helpful, but is not mandatory.)

6.1 Intended use. The mount covered in this specification is intended to support loads only in the axial direction for noise and vibration attentuation. The mount is primarily for use in submarines, and where applicable in surface ships.

6.2 Acquisition requirements. Acquisition documents must specify the following:

(a) Title, number and date of this specification.
(b) Issue of DODISS to be cited in the solicitation, and if required, the specific issue of individual documents referenced (see 2.1.1 and 2.2).
(c) Type of material to be used in the manufacture of metal parts (see 3.2.1).
(d) Protective treatment, if different (see 3.2.3).
(e) Direction of test axis (axes) for uniformity test (see 3.4.3).
(f) Whether four hole configuration is required (see 3.6).
(g) Sampling plan for quality conformance inspection of rubber compounds and finished mounts, including acceptance and rejection levels (see 4.4.3.2).
(h) Navy fire-retardant material requirements (see 5.1.1).
(i) Preservation and unit container requirements (see 5.2 and 5.2.1.1).
(j) Packing and waterproofing requirements (see 5.3, 5.3.2, 5.3.2.1.3, and 5.3 3).
(k) Marking and special marking requirements (see 5.4).
(l) Whether or not auxiliary snubbers are required (see 3.2.2 and 6.5).

6.3 Consideration of data requirements. The following data requirements should be considered when this specification is applied on a contract The applicable Data Item Descriptions (DIDs) should be reviewed in conjunction with the specific acquisition to ensure that only essential data are requested/provided and that the DIDs are tailored to reflect the requirements of the specific acquisition. To ensure correct contractual application of the data requirements, a Contract Data Requirements List (DD Form 1423) must be prepared to obtain the data, except where DOD FAR Supplement 27.475-1 exempts the requirement for a DD Form 1423.

Reference paragraph	DID number	DID title	Suggested tailoring
3.1, 4.3	DI-RELI-80939	Test and inspection report	-------

The above DIDs were those cleared as of the date of this specification The current issue of DOD 5010.12-L, Acquisition Management Systems and Data Requirements Control List (AMSDL), must be researched to ensure that only current, cleared DIDs are cited on the DD Form 1423.

Downloaded from http://www.everyspec.com

6 4 Qualification. With respect to products requiring qualification, awards will be made only for products which are, at the time of award of contract, qualified for inclusion in Qualified Products List QPL No 19863 whether or not such products have actually been so listed by that date. The attention of the contractors is called to these requirements, and manufacturers are urged to arrange to have the products that they propose to offer to the Federal Government tested for qualification in order that they may be eligible to be awarded contracts or purchase orders for the products covered by this specification The activity responsible for the Qualified Products List is the Naval Sea System Command, SEA 55Z3, Department of the Navy, Washington, DC 20362-5101 and information pertaining to qualification of products may be obtained from that activity.

6.4.1 Copies of "Provisions Governing Qualification SD-6" may be obtained upon application to Commanding Officer, Standardization Documents Order Desk, Bldg. 4D, 700 Robbins Avenue, Philadelphia, PA 19111-5094.

6.5 Definitions.

6.5.1 Axial (vertical) direction. Tests specified in the axial direction shall be interpreted to mean a direction which is perpendicular to the top steel plate (see figure 5).

6.5.2 Transverse direction. Tests specified in the transverse direction shall be interpreted to mean a direction perpendicular to the flanges of the steel support channel (see figure 5).

6.5.3 Longitudinal direction. Tests specified in the longitudinal direction shall be interpreted to mean a direction parallel to the flange of the steel support channel (see figure 5).

6.6 Auxiliary snubbers. Auxiliary snubbers are provided to limit shock excursions in special applications. Unless specified for the particular application (see 6 2), these snubbers shall not be used

6.7 Information on technique for manufacturing mount. Information on the technique for manufacturing the type 5B5,000H mount is available from the Department of the Navy and will be furnished upon request from prospective bidders (see 6.10).

6.8 Oil and ozone resistant coating Suggested formulations and application procedures for oil and ozone resistant coating (see 6 10) are specified in 6 8 1 and 6.8.2.

6.8.1 Suggested formulations. The formulations shown below should be blended together just prior to use. The viscosity of the blend should be adjusted to about 650 centipoises by using more or less of methyl ethyl ketone in the formulations.

Downloaded from http://www.everyspec.com

	312-118A	312-118B
Prefluxed blend of 70 percent nitrile rubber with 30 percent polyvinyl chloride	100	100
HAF carbon black	30	30
Stearic acid	1	1
Zinc oxide	5	5
ZBX (zinc butyl xanthate)	8	
DBA (dibenzyl amine)		8
Sulfur		4
Methyl ethyl ketone	656	674

6.8.2 Suggested procedure for application of coating to mounts. The sequence of operations shown below should be followed in order to obtain satisfactory performance from the coating:

(a) Remove rubber flash from mount by trimming or buffing.
(b) Sandblast the mount: brush off dust.
(c) Apply one brush coat of Thixon P-2 metal primer, or equivalent, to all metal surfaces, and allow to dry for at least 1 hour.
(d) Wash the rubber portion of the mount with an aqueous solution of Vel detergent, or equivalent, and rinse with tap water.
(e) Chlorinate the rubber surfaces by immersing entire mount for 3 minutes in water saturated with chlorine.
(f) Rinse mount with tap water and dry until all traces of water have evaporated.
(g) Blend the 312-118A solution with the 312-118B solution and let stand 1 hour to permit entrapped air to escape.
(h) Apply two coats of the blended formulations to the entire mount, including metal parts, by brushing or dipping.
(i) Allow the first coat to dry for at least 1 hour and the second coat to dry for at least 4 hours before handling the mount. Alternatively, the second coat should be allowed to dry for at least 4 hours, and then the mount placed in an oven at 130 ± 5°F for 16 hours to cure the coating.

6.9 Formulation of rubber stocks. The following are suggested formulations of rubber stocks for the 5B5,000H mount (see 6.10)·

Resilient element		Main snubber		Auxiliary snubber		Bonding cement	
Smoked sheet	100	Hycar 1041	100	Hycar 1041	100	Durez resin 12987	100
P-33	50	SRF black	75	SRF black	75	Methyl ethyl ketone	150
Stearic acid	3	Stearic acid	1	Stearic acid	1	Methanol	150
Zinc oxide	5	Zinc oxide	5	Zinc oxide	5		
Neozone D	1	Durez resin 12687	30	UPO-88	2		
Antioxidant 2246	1	Cumar P-10	20	Heliozone	3		
Califlux 510	3	UOP-88	2	Cumar P-10	30		
Altax	1	Heliozone	3	Altax	1 5		
Thionex	0.3	Altax	1 5	Sulfur	1.5		
Sulfur	1.5	Retarder W	0 5				
		Sulfur	1.5				
			27				

Downloaded from http://www.everyspec.com

6.10 General. The furnishing of information (see 6 7) and the formulations and procedures (see 6.8 and 6.9) are solely for assistance in fabrication of the 5B5,000H mount for naval use. The use of this information does not constitute any agreement or obligation by the Department of the Navy to procure mounts made of these formulations. Also, the use of this information does not guarantee compliance with this specification nor will it relieve the manufacturer from having the mounts tested against the applicable test requirements of this specification. Certain ingredients appear as proprietary names since these were specific ones used in the development work. It is not intended to limit the choice of commercial sources for an ingredient or to infer that one proprietary product is better than another.

6.11 Material safety data sheet (MSDS). Contracting officers must identify those activities requiring copies of MSDSs. Additional required Government information is contained in FED-STD-313 In order to obtain the MSDS, FAR clause 52.223-3 must be in the contract.

6.12 Subject term (key word) listing.

Decelerator
Noise, structureborne
Rubber stocks
Shock
Snubber
Vibration

6.13 Sub-contracted material and parts. The preservation and packaging for delivery requirements of referenced documents listed in section 2 do not apply when material and parts are acquired by the contractor for incorporation into the equipment and lose their separate identity when the equipment is shipped.

6.14 Changes from previous issue. Marginal notations are not used in this revision to identify changes with respect to the previous issue due to the extensiveness of the changes.

Preparing activity:
Navy - SH
(Project 5340-N108)

Downloaded from http://www.everyspec.com

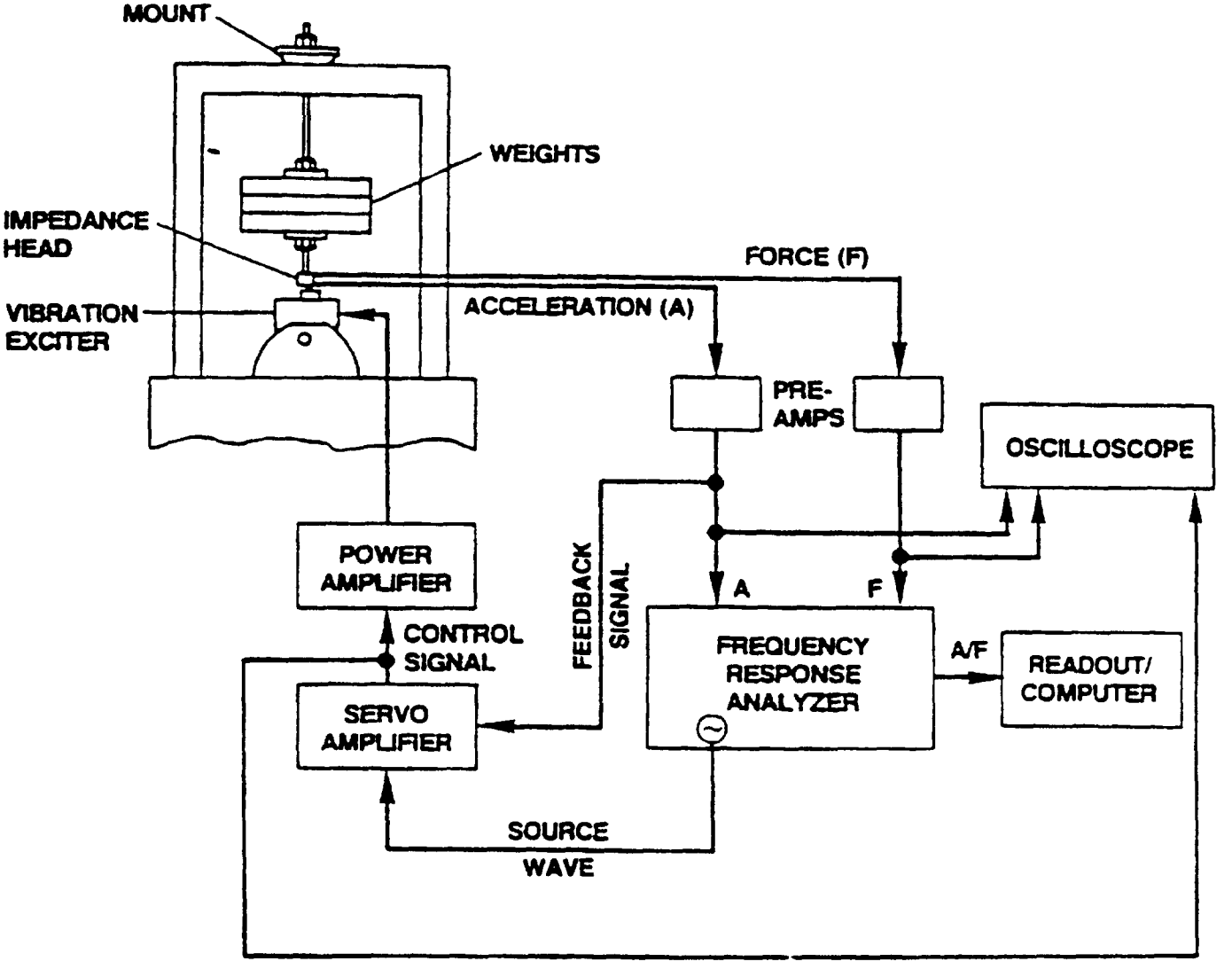

FIGURE 1 Typical system for measurement of resonant frequency by the suspended mass method.

Downloaded from http://www.everyspec.com

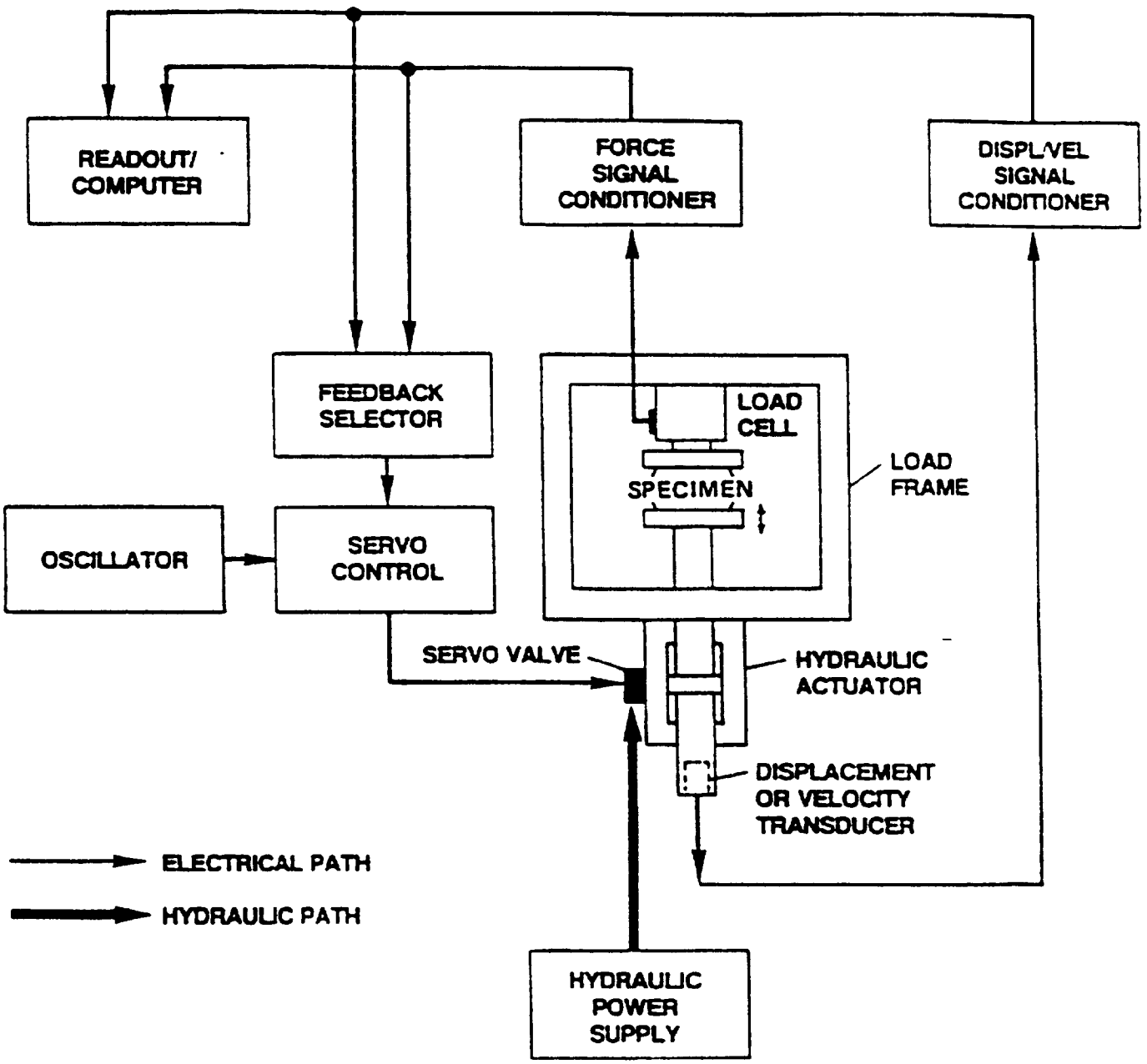

FIGURE 2. Schematic diagram of major components of electrohydraulic closed-loop test machine

Downloaded from http://www.everyspec.com

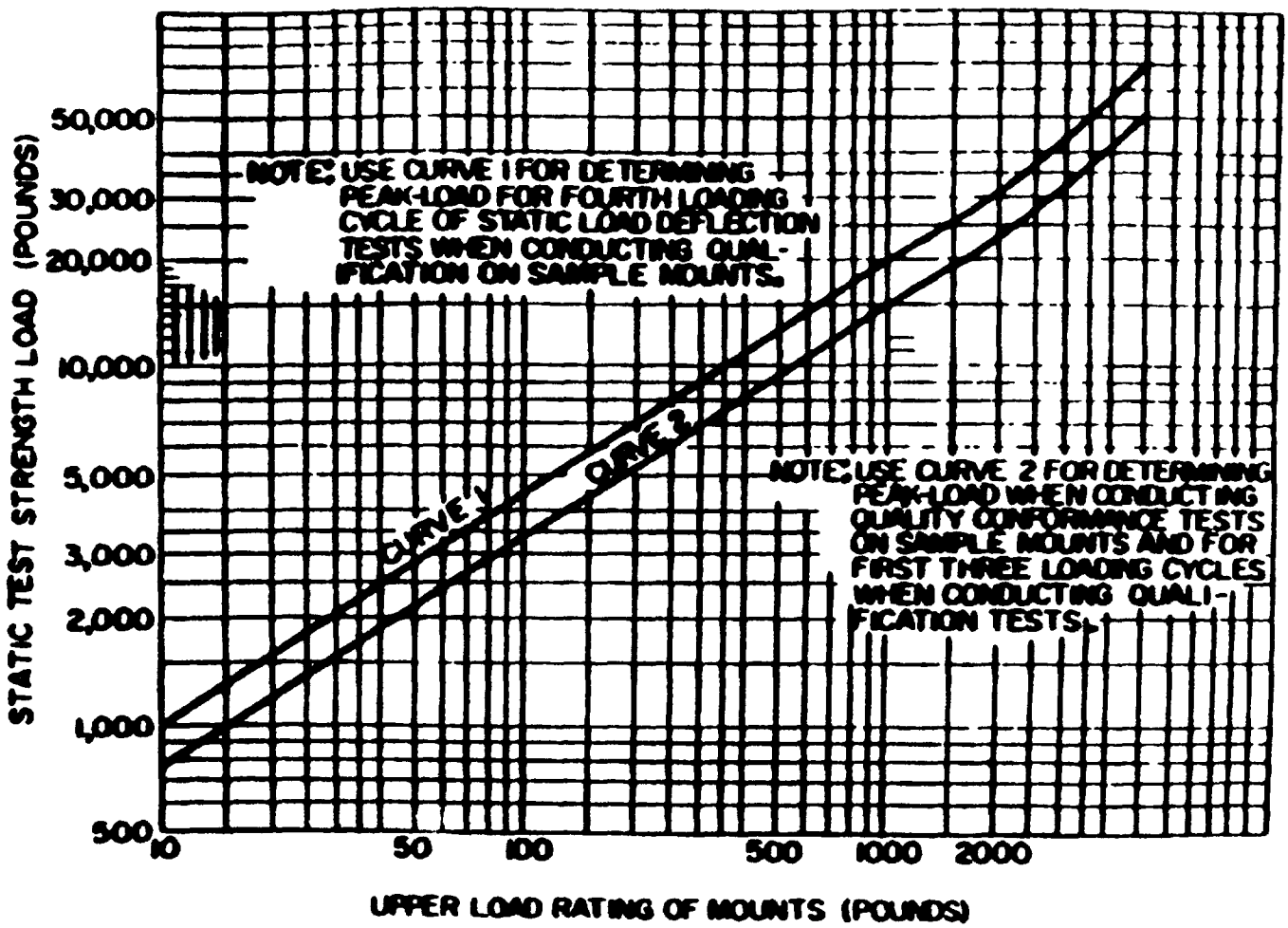

FIGURE 3. Minimum static loads for resilient mounts strength tests.

Downloaded from http://www.everyspec.com

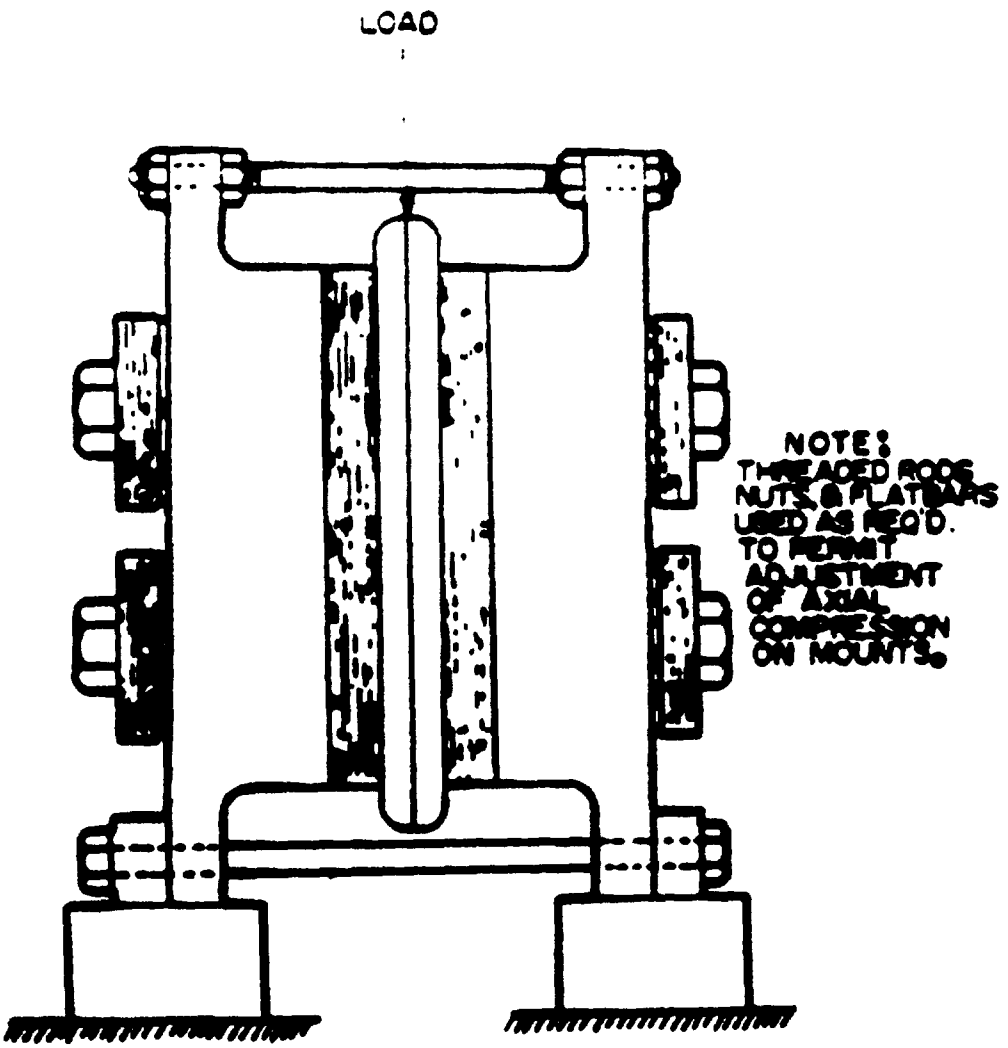

FIGURE 4. Suggested arrangement for holding mounts for static load deflection tests in transverse and longitudinal direction.

Downloaded from http://www.everyspec.com

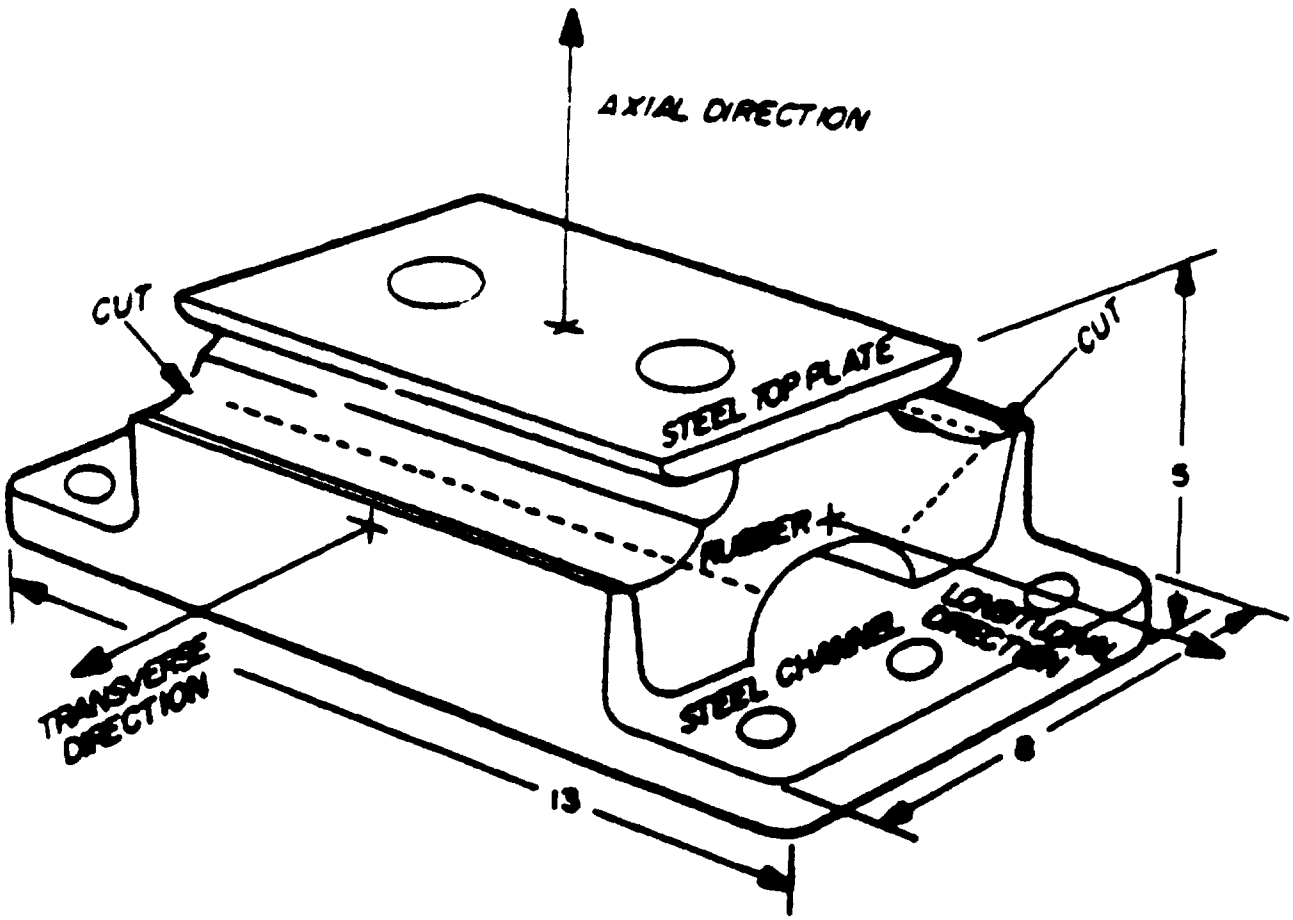

FIGURE 5. Sketch showing axes of type 5B5,000H resilient mount and location of cuts for porosity and delamination test

Downloaded from http://www.everyspec.com

STANDARDIZATION DOCUMENT IMPROVEMENT PROPOSAL

INSTRUCTIONS

The preparing activity must complete blocks 1, 2, 3, and 8 In block 1, both the document number and revision letter should be given.

2 The submitter of this form must complete blocks 4, 5, 6, and 7

3 The preparing activity must provide a reply within 30 days from receipt of the form

NOTE: This form may not be used to request copies of documents, nor to request waivers, or clarification of requirements on current contracts. Comments submitted on this form do not constitute or imply authorization to waive any portion of the referenced document(s) or to amend contractual requirements.

I RECOMMEND A CHANGE:

1. DOCUMENT NUMBER: MIL-M-19863D(SH)

2. DOCUMENT DATE (YYMMDD): 91/03/01

3. DOCUMENT TITLE: MOUNT, RESILIENT: TYPE 5B5,000H

4. NATURE OF CHANGE (Identify paragraph number and include proposed rewrite, if possible Attach extra sheets as needed)

5. REASON FOR RECOMMENDATION

6. SUBMITTER

a. NAME (Last, First, Middle Initial)

b. ORGANIZATION

c. ADDRESS (Include Zip Code)

d. TELEPHONE (Include Area Code)
(1) Commercial
(2) AUTOVON
(If applicable)

7. DATE SUBMITTED (YYMMDD)

8. PREPARING ACTIVITY

a NAME Technical Point of Contact (TOPC):
Mr. Charles Stewart (SEA 56Y62)
SE ADDRESS ALL CORRESPONDENCE AS FOLLOWS:

b TELEPHONE (Include Area Code)
(1) Commercial: TPOC: 703-602-6963
(2) AUTOVON: 8-332-6963

c. ADDRESS (Include Zip Code)
Commander, Naval Sea Systems Command
Department of the Navy (SEA 55Z3)
Washington, DC 20362-5101

IF YOU DO NOT RECEIVE A REPLY WITHIN 45 DAYS, CONTACT:
Defense Quality and Standardization Office
5203 Leesburg Pike, Suite 1403, Falls Church, VA 22041-3466
Telephone (703) 756-2340 AUTOVON 289-2340