MIL-M-19379B(SHIPS)
21 MARCH 1961
SUPERSEDING
MIL-M-19379A(SHIPS)
27 March 1959

MILITARY SPECIFICATION

MOUNTS, RESILIENT, MARE ISLAND TYPES 11M15, 11M25, AND 10M50

1 SCOPE

1.1 Scope. - This specification covers Mare Island Rubber Laboratory types of rubber resilient mounts together with tests for evaluating the rubber stock and the completely assembled mounts. These mounts are intended primarily for use on submarines where applicable.

1.2 Designation. - The mounts covered by this specification have the following load capacities: mount type 11M15, 9 to 15 pounds; 11M25, 15 to 25 pounds, 10M50, 25 to 50 pounds. Corresponding range of natural frequencies are shown on figures 1, 2 and 3. The type designation is arbitrarily established based upon the upper load rating characteristics of the mount. The numbers and letter in the type designation denote the following:

First number = denotes the natural frequency at upper rated load (c. p. s.).
Letter M = denotes the mount design activity (Mare Island Rubber Laboratory).
Second number = denotes the upper load rating (pounds).

2. APPLICABLE DOCUMENTS

2.1 The following specifications, standards, and drawings of the issue in effect on date of invitation for bids, form a part of this specification to the extent specified herein:

SPECIFICATIONS

MILITARY
MIL-M-17185 - Mounting, Resilient, Tests for General Specification (Shipboard Application).

STANDARDS

FEDERAL
FED-STD-601 - Rubber: Sampling and Testing.

MILITARY
MIL-STD-105 - Sampling Procedures and Tables for Inspection by Attributes.
MIL-STD-407 - Visual Inspection Guide for Rubber Molded Items.

DRAWINGS

BUREAU OF SHIPS
5000-S1112-1385824 - [redacted] - Mount, Res Mare Island Rubber Laboratory Type.

(Copies of specifications, standards, drawings, and publications required by contractors in connection with specific procurement functions should be obtained from the procuring activity or as directed by the contracting officer.)

2.2 Other publications. - The following document forms a part of this specification to the extent specified herein. Unless otherwise indicated, the issue in effect on date of invitation for bids shall apply.

OFFICIAL CLASSIFICATION COMMITTEE
Uniform Freight Classification Rules.

(Application for copies should be addressed to the Official Classification Committee, 1 Park Avenue at 33rd Street, New York 16, N. Y.)

3. REQUIREMENTS

3.1 Definitions. -

3.1.1 Axial direction. - Tests specified in the axial direction shall be interpreted to mean a direction which is parallel to the center bolt axis of the mount as shown on Drawing 5000-S1112-1385824.

3.1.2 Radial direction. - Tests specified in the radial direction shall be interpreted to mean a direction which is perpendicular to the center bolt axis of the mount.

3.2 Materials. -

3.2.1 Metal. - The metal components of the mounts shall be of material equivalent to that specified on the drawings for the mounts. The bureau or activity concerned shall specify in the contract or order whether the mount shall be manufactured from steel or manganese bronze (see 6.1). The metal components for the particular type mount shall be formed to shape and finish in accordance with the dimensions and allowable tolerance specified on the applicable mount drawing.

FSC 5340

3.2.2 Rubber.-

3.2.2.1 Resilient element.- The resilient element shall be fabricated of oil resistant compounds utilizing polymerized chloroprene or a copolymer product of butadiene and acrylonitrile as the basic material, molded to the specified form as shown on Drawing 5000-S1112-1385824.

3.2.2.1.1 Delamination.- There shall be no delamination nor air pockets in any portion of the resilient elements of the finished mount.

3.2.2.1.2 Bond.- The resilient element shall be completely bonded to all steel components specified on Drawing 5000-S1112-1385824.

3.2.2.1.3 Surface condition.- There shall be no backrinding nor blisters on the outer surfaces of the finished mount.

3.2.2.1.4 Physical requirements.- The rubber stock used in the resilient elements of the mount shall conform to the physical requirements specified in table I.

Table I - Physical requirements.

	Type 11M15 and 11M25 mounts	Type 10M50 mount
Tensile strength (minimum):		
Before aging, p.s.i.	2200	2800
After aging at 194° F. for 46 hours, p.s.i.	2100	2700
Elongation at break (percent minimum):		
Before aging	650	575
After aging at 194° F. for 46 hours	600	525
Compression set after oven aging (percent maximum)	40	34
Cold compression set (percent maximum)	50	60
Adhesion of resilient:		
Element to metal (minimum - p.s.i.)	450	550
Hardness, shore A after 3 seconds	38 ± 5	48 ± 5
Resistance to oil:		
Swelling (percent maximum)	15	15

3.2.3 Protective treatment.- Where steel components are used in the manufacture of the mount they shall be resistant to, or protected against, corrosion by salt water or spray or other atmospheric conditions encountered in service. Unless otherwise specified in the contract or order, the minimum protective treatment shall be equivalent to that specified on the mount drawings.

3.3 Performance.-

3.3.1 Uniformity.- When tested under applicable loads in accordance with 4.4.4.7, the resonant frequencies of the mounts shall be within the frequency tolerances specified on figures 1, 2 and 3

3.3.2 Static load deflection - The mounts, when tested in accordance with 4 4 4.8 shall not show any separation, or break in/or between component parts or appreciable permanent deformation of metal parts.

3.3.3 Fatigue.- The mounts when tested in accordance with 4.4.4.9, shall withstand 500,000 cycles without any signs of failure of the resilient element, bond, and metal parts. The drift occurring to the type 11M15, 11M25 and 11M50 mounts during these tests shall not exceed 0.017, 0.025 and and 0.040 inch, respectively.

3.3.4 Delamination.- The mount when tested in accordance with 4.4.4.10, shall not show evidence of rubber separation into distinct layers or laminations.

3.3.5 Vibration, noise, and shock.- The mounts shall conform to the requirements for vibration, noise and shock specified in Specification MIL-M-17185.

3.4 Identification.- Each type mount shall be identified with the markings specified on Drawing 5000-S1112-1385824 for the mount

3.5 Mount design.- The mount shall conform to all applicable details shown on Drawing 5000-S1112-1385824.

3.6 Workmanship.- The workmanship of all phases of work required in the manufacture of the mounts shall be first class in every respect.

4. QUALITY ASSURANCE PROVISIONS

4.1 The supplier is responsible for the performance of all inspection requirements as specified herein. Except as otherwise specified, the supplier may utilize his own or any other inspection facilities and services acceptable to the Government. Inspection records of the examination and tests shall be kept complete and available to the Government as specified in the contract or order. The Government reserves the right to perform any of the inspections set forth in the specification where such inspections are deemed necessary to assure supplies and services conform to prescribed requirements.

4.2 Sampling.-

4.2 1 Sampling for lot acceptance inspection.-

4.2.1.1 Lot - For purpose of sampling, a lot shall consist of all mounts offered for delivery at one time.

4.2.1.2 Sampling for visual and dimensional examination. - A random sample of mounts shall be selected in accordance with table II from each lot for examination of visual and dimensional characteristics

4.2.1.3 Rubber stock sampling. - A set of sample specimens of the applicable quanitity, and size, specified in 4.2.2.1 from each batch of rubber stock mixed and at least one set of samples from each 450 pounds mixed shall be subjected to tests outlined in 4.3.3.

Table II - Sampling for visual and dimensional examination.

Number of mounts in a lot	Number of mounts in sample	Major defects		Total defects	
		Acceptance number (defectives)	Rejection number (defectives)	Acceptance number (defectives)	Rejection number (defectives)
40 or under	10	0	1	1	2
41 to 110	15	0	1	1	2
111 to 300	25	1	2	2	3
301 to 500	35	1	2	3	4
501 to 800	50	2	3	4	5
801 to 1300	75	3	4	6	7
1301 to 3200	110	4	5	8	9

Note. - At the option of the Government, the equivalent double or multiple sampling plan from Standard MIL-STD-105 may be used.

4.2.1.4 Sampling for physical tests. - For the tests specified in 4.2.2.2 and 4.3.2, a random sample of mounts shall be selected in accordance with table III for each lot.

4.2.2 Sampling for production check test. -

4.2.2.1 Specific stock samples. - Tests specified in 4.4.2, shall be performed on samples described in table IV.

Table III - Number of samples and failures permitted

Number of mounts in lot	Sample quantities			Maximum allowable number of failures			
	First sample quantity	Second sample quantity	First and second sample quantities combined	In first sample quantity		In first and second sample quantity combined	
				For any one test	For all tests combined	For any one test	For all tests combined
2 to 8	3	Use single sampling plan for these lots		0	0	-	-
9 to 15	4			0	0	-	-
16 to 25	5			0	0	-	-
26 to 40	6			0	0	-	-
41 to 65	4	4	8	0	0	1	1
66 to 110	5	5	10	0	0	1	1
111 to 180	6	6	12	0	0	1	1
181 to 300	8	8	16	1	1	1	2
301 to 500	10	10	20	1	1	2	2
501 to 800	12	12	24	1	1	2	3
801 to 1300	15	15	30	1	2	2	3
1301 to 3200	20	20	40	2	2	3	4

4.2.2.2 Mount samples. - Four mounts selected in accordance with 4.2.1.4 shall be used for the tests specified in 4.4.3.

4.3 Lot acceptance inspection. -

4.3.1 Visual and dimensional examination. - Each of the sample mounts selected in accordance

Table IV - Stock samples

Quantity	Description and size
3	6 inches by 6 inches by 0.080 inch thich molded sheets
3	Metal adhesion specimens (see 4.4.4.6)
6	Compression set pellets 1/2 by 1.129 inches

with 4.2.1.2 shall be visually and dimensionally examined to verify compliance with this specification. Standard MIL-STD-407 shall be used to determine and evaluate defects through visual examination.

4.3.1.1 Any mount in the sample containing one or more major visual or dimensional defects shall be rejected and counted against the AQL for major defects. Any mount containing more than one minor defect shall be rejected and counted against the AQL for total defects. Any mount containing only one minor defect (no major defect) shall be counted a minor defective against the AQL for total defectives but shall not be rejected.

4.3.1.2 If in any sample the number of defective mounts as defined above exceeds the acceptance number for either AQL for that sample, the lot represented by the sample shall be rejected.

4.3.2 Tests of mounts. - The samples selected in accordance with 4.2.1.4 shall be subjected to the tests specified in table V in the order listed.

Table V - Physical tests on mounts.

Test	Paragraph
Uniformity	Tests shall be in accordance with 4.4.4.7
Static load deflection	Test shall be in accordance with 4.4.4.8.2 modified as follows: The mounts shall be subjected to four loading and unloading cycles in the axial direction. For each loading cycle, loads shall be applied up to the load specified on curve No. 2 of figure 4 for the particular upper load rating for the mount. Deflection rate shall not exceed 0.3 inch per minute.

4.3.3 Tests of rubber stock. - Samples of rubber stock selected in accordance with 4.2.1.3 shall be subjected to the tests specified in table VI.

4.3.4 Production check tests. - Production check tests shall be conducted on the first lot offered for delivery but not more than once a year for any one manufacturer. These tests shall consist of the tests specified in 4.4 except when there is evidence that the quality of the mounts being offered has changed.

Table VI - Tests of rubber stock

Test	Paragraph
Tensile strength	4.4.4.1 and 4.4.4.3
Elongation	4.4.4.1 and 4.4.4.3
Compression set	4.4.4.2 and 4.4.4.3
Hardness	4.4.4.4

4.4 Test procedures. -

4.4.1 Standard test conditions. - Unless otherwise specified, tests on mounts shall be made within an ambient air temperature range of 80° ± 10° F. Within this range, the temperature from the beginning to the end of any one test shall not vary more than plus or minus 5° F.

4.4.2 The rubber stock samples specified in 4.2.2.1 shall be subjected to the following tests:

(a) Initial tensile strength (see 4.4.4.1).
(b) Initial ultimate elongation (see 4.4.4.1).
(c) Tensile strength after oven aging (see 4.4.4.1 and 4.4.4.3).
(d) Ultimate elongation after oven aging (see 4.4.4.1 and 4.4.4.3).
(e) Compression set after oven aging (see 4.4.4.2 and 4.4.4.3).
(f) Hardness, shore A (see 4.4.4.4).
(g) Resistance to oil, percent swelling (see 4.4.4.5).
(h) Adhesion to metal (see 4.4.4.6).
(i) Cold compression set (see 4.4.4.2 and 4.4.4.3).

4.4.3 Two of the mount samples specified in 4.2.2.2 shall be subjected to the following examination and tests:

(a) Examination (see 4.3.1).
(b) Uniformity (see 4.4.4.7).
(c) Static load deflection (see 4.4.4.8).

The remaining two mount samples specified in 4.2.2.2 shall be subjected to the following examination and tests:

(a) Examination (see 4.3.1).
(b) Uniformity (see 4.4.4.7).
(c) Fatigue-drift (see 4.4.4.9).
(d) Delamination (see 4.4.4.10).

4.4.4 Method of tests. -

4.4.4.1 Tensile and elongation tests. - Tensile strength and elongation shall be determined in accordance with methods 4111 and 4121, respectively, of standard FED-STD-601, type III die shall be used.

4.4.4.2 Compression set.- Compression set shall be determined in accordance with method 3311 of Standard FED-STD-601 except aging condition shall be as specified in 4.4.4.3.

4.4.4.2.1 Cold compression set.- The sample specimen, clamped to the specified 40 percent compression shall be placed in a methanol bath for 94 ± 1/2 hours at 30° ± 2° F. (-1.1° ± -1.1° C.). At the end of this conditioning period, the specimen shall be released from the clamps and permitted to recover for a period of 30 minutes at the test temperature of 30° F. The thickness of the specimen shall be measured at the end of the recovery period at the test temperature of 30° F. Two tests, agreeing within 5 percent of each other, shall be conducted and the average of these reported.

4.4.4.2.2 Computation.- The compression set shall be computed in accordance with the following formula

$$\text{Compression set (percent)} = \frac{to - t1}{to - ts} \times 100$$

Where
- to = the original thickness of the test specimen.
- t1 = the thickness of the test specimen 30 minutes after removal from the clamp.
- ts = the thickness of the steel spacers.

4.4.4.3 Aging test.- The specimens for tensile, elongation, and compression set tests shall be given an accelerated aging test in accordance with method 7221 of Standard FED-STD-601 at a temperature of 194° F. ± 2° F, (90° C. ± 1.1° C.) for 46 ± 1/4 hours. Tensile and elongation tests on unaged specimens shall be made immediately prior to, and on the same machine, as the tensile tests on the aged specimens.

4.4.4.4 Hardness test.- Hardness shall be determined in accordance with method 3021 of Standard FED-STD-601 with a Shore durometer. Specimen shall be stock samples (see 4.2.2.1).

4.4.4.5 Swelling in oil (stocks).- Swelling shall be determined in accordance with method 6211 of Standard FED-STD-601 except the thickness of the specimen shall be 0.08 ± 0.01 inch. The immersion medium shall be medium number 3 of method 6001 of Standard FED-STD-601.

4.4.4.6 Adhesion to metal tests.-

4.4.4.6.1 Apparatus.- A tension testing machine shall be used for measuring the strength of adhesion. The moving head of the machine shall travel at a rate of 1 inch per minute. The machine shall provide a recording device to give the total pull in pounds at the conclusion of the tests.

4.4.4.6.2 Test specimen.- The standard test specimen shall consist of a cylinder of rubber 0.125 ± 0.005 inch in thickness and 1.597 ± 0.001 inches in diameter having its circular ends bonded to the faces of two metal plates each 0.375 inch in thickness and of the same diameter as the rubber cylinder. The metal plate shall have smooth flat faces which shall be parallel in the finished specimen. The metal plates shall be machined from roll bar steel, each having on the back face a round stud 1/2 inch in diameter and 3/4 inch in length, threaded with 20 NC, fit 3 threads per inch. The specimens shall be prepared by the same molding procedure used in molding the assembled mounts offered for delivery.

4.4.4.6.3 Procedure.- The test specimens shall be kept at a room temperature for at least 24 hours before being tested. The specimen is then mounted in the tension testing machine using care in centering and adjustment so that the tension shall be uniformly distributed. A steady tension load shall then be applied at 1 inch per minute until the rubber separates from the metal surface or ruptures. Tests shall be conducted on three specimens and their results averaged. The adhesion value shall be expressed in pounds per square inch and shall be calculated by dividing the tension load causing failure by the original area of the adhered surface.

4.4.4.7 Uniformity tests.- The uniformity of the mounts shall be evaluated by determining the resonant frequency of mount in the axial direction under the following loads:

Type	Load (Pounds)
11M15	9, 12, and 15
11M25	15, 18, 22, and 25
10M50	25, 33, 42, and 50

The resonant frequencies obtained on the mounts under the same load shall be averaged. From this data, a curve of average resonant frequencies versus loads shall be plotted.

4.4.4.8 Static load deflection test.-

4.4.4.8.1 Apparatus.- A universal type testing machine may be employed to conduct static load deflection tests on mounts. The testing machine should be equipped with a space control which will load the mount at a constant deflection rate. If such equipment is not available, the increment load method specified in Specification MIL-M-17185 modified to give the order of loadings specified in 4.4.4.8.2 may be employed.

4.4.4.8.2 Test in the axial direction (parallel to center bolt axis) on the universal testing machine.- When load deflection tests are conducted in the axial direction, a single mount shall be secured in a suitable jig and subjected to four loading

and unloading cycles. For the first three loading cycles, the loads shall be applied at a deflection rate not exceeding 0.3 inch per minute, up to the load specified on curve No. 2 of figure 4 for the upper load rating of the mount. For the fourth loading cycle, the mount shall be loaded up to the peak load specified on curve No. 1 of figure 4 for the upper load rating of the mount. The fourth loading and unloading cycle shall be reported as the static load deflection curve for the mount.

4.4.4.8.3 Test in the radial direction (perpendicular to the center bolt axis) on the universal testing machine.- When load deflection tests are conducted in the radial direction two mounts shall be secured in a jig similar to that shown on figure 5. Each mount shall be compressed axially to that amount which its upper load rating deflected the mount during static load deflection test in the axial direction. This compression is obtained by adjusting nuts on four rods which changes the distance between the angle and bracket supports with respect to the loading bar. After the two mounts have been assembled in the jig and secured they shall be subjected to four loading and unloading cycles in accordance with the precedure specified in 4.4.4.8.2.[1]

4.4.4.9 Fatigue-drift test.- When fatigue-drift tests are conducted the unloaded height of the mount measured vertically from the top surface of the steel support plate to the top surface of the steel loading cap shall be recorded. The type 11M15, 11M25 and 10M50 mounts shall be loaded statically in the axial direction with 25 and 50 pounds respectively. The application of the loads may be in the form of a lump mass or by incremental loading. If incremental loading is employed, the total loading on the mount shall be accomplished within 10 minutes. Loads shall be applied in such a manner as to prevent sudden impacts on the mounts. One hour after application of total load on the mount, the loss in height shall be measured with a dial gauge having a 0.001 inch sensitivity. The mount shall then be vibrated at its natural frequency in the axial direction until the mounts have been subjected to at least 500,000 cycles. The exciting force shall be such to insure that the mass on the mount is given a displacement of 0.050 inch each side of equilibrium position (0.100 inch double amplitude). The vibration tests shall be conducted at regular and equal time intervals for 4 consecutive days. Drift measurements shall be measured at the end and beginning of each vibration test run. Final drift measurement shall be made 96 hours after initial static loading. The drift of the mount shall be the difference in the measurements taken 1 hour after loading and 96 hours after loading. Test shall be conducted at room temperature of 80° ± 5° F.

[1] The loads that are determined in 4.4.4.8.2 from figure 4 for the test of a single mount in the axial direction shall also be used for the test of two mounts in the radial direction. For example, a mount with an upper load rating of 25 pounds would be subjected to peak loadings of 1325 pounds for three loading cycles. For the fourth loading cycle, the mount would be subjected to a peak loading of 1750 pounds.

4.4.4.10 Delamination test.-

4.4.4.10.1 Method of test.- One of the mounts previously used for fatigue or static load-deflection tests shall be cut into two parts and immersed in benzol, conforming to the characteristics specified in 4.4.4.10.2, for 16 ± 1/4 hours at a temperature of 80° ± 5° F. After removal from benzol, the sections of the mount shall be examined to determine evidence of separation into distinct layers or laminations.

4.4.4.10.2 Benzol.- The benzol shall be a pure, water-white grade, free from suspended matter and conforming to the following characteristics:

Specific gravity at 60° F.	0.875 to 0.0886.
Distillation limits.	
Initial boil point	168° to 172° F.
95 percent evaporated	174° F. (maximum).
Dry	176° F. (maximum).
Recovery	98 percent (minimum).

5. PREPARATION FOR DELIVERY

5.1 Domestic shipment and early equipment installation.-

5.1.1 Mounts.-

5.1.1.1 Preservation and packaging.- Preservation and packaging shall be sufficient to afford adequate protection against corrosion, deterioration and physical damage during shipment from the supply source to the using activity and until early installation.

5.1.1.2 Packing.- Packing shall be accomplished in a manner which will insure acceptance by common carrier and will afford protection against physical or mechanical damage during direct shipment from the supply source to the using activity for early installation. The shipping containers or method of packing shall conform to the Uniform Freight Classification Rules and Regulations or other carrier regulations as applicable to the mode of transportation.

5.1.1.3 Marking.- Shipment marking information shall be provided on interior packages and exterior shipping containers in accordance with the contractor's commercial practice. The information shall include nomenclature, Federal stock number or manufacturer's part number, mount identification, specification no., date of manufacture, contract or order number, contractor's name and destination.

(5 2 Domestic shipment and storage or overseas shipment.- The requirements and levels of preservation, packaging, packing and marking for shipment shall be specified by the procuring activity (see 6.1).

(5.2.1 The following provides various levels of protection during domestic shipment and storage or overseas shipment, which may be required when procurement is made by a Government activity (see 6.1).

5.2.1.1 Preservation and packaging.-

5.2.1.1.1 Level A.- Mounts shall be packaged in accordance with method III of Specification MIL-P-116. Contact preservative is not required. Unit containers shall conform to Specification PPP-B-566, PPP-B-676, PPP-B-665, or PPP-B-636, at the option of the contractor. Closure of unit containers shall conform to the applicable container specification or appendix thereto.

5.2.1.1.1.1 Intermediate containers.- Unit quantities in an intermediate container shall be as specified (see 6.1). Intermediate containers shall conform to Specification PPP-B-566, PPP-B-676, PPP-B-665 or PPP-B-636, at the option of the contractor. Box closures shall conform to the applicable box specification or the appendix thereto. The gross weight of paperboard boxes shall not exceed 10 pounds and fiberboard boxes shall not exceed 20 pounds.

5.2.1.1.2 Level C.- Preservation and packaging shall be sufficient to afford adequate protection against corrosion, deterioration and physical damage during shipment from the supply source to the using activity and until early installation.

5.2.1.2 Packing.-

5.2.1.2.1 Level A.- Mounts shall be packed in containers conforming to any one of the following specifications at the option of the supplier:

Specification	Type or class
PPP-B-585	Class 3 use
PPP-B-591	Overseas type
PPP-B-601	Overseas type
PPP-B-621	Class 2
PPP-B-636	Class 2
MIL-B-10377	Overseas type

Shipping containers shall have caseliners conforming to Specification MIL-L-10547. Caseliners shall be closed and sealed in accordance with the appendix to Specification MIL-L-10547. Caseliners for class 2 fiberboard boxes conforming to Specification PPP-B-636 may be omitted provided all corners and edge seams and manufacturer's joints are sealed with minimum 2-inch wide tape conforming to Specification PPP-T-76. Boxes shall be closed and banded in accordance with the applicable box specification or appendix thereto. The gross weight of wood or wood-cleated boxes shall not exceed 200 pounds.

5.2.1.2.2 Level B.- Mounts shall be packed in boxes conforming to any of the following specifications at the option of the supplier:

Specification	Type or class
PPP-B-585	Class 1 or 2 use
PPP-B-591	Domestic type
PPP-B-601	Domestic type
PPP-B-621	Class 1
PPP-B-636	Class 1
MIL-B-10377	Domestic type

Box closures shall be as specified in the applicable box specification or appendix thereto. The gross weight of wood or wood-cleated boxes shall not exceed 200 pounds.

5.2.1.3 Marking.-

5.2.1.3.1 Interior packages.- In addition to the marking specified in Standard MIL-STD-129, each package shall be plainly marked in black waterproof ink with the following information completed:

MOUNT IDENTIFICATION_____
SPEC. NO._____
DATE OF MFR._____

5.2.1.3.2 Shipping containers.- In addition to the marking specified in Standard MIL-STD-129, shipping containers shall be marked in black waterproof ink on two adjacent sides, with the following information completed:

MOUNT IDENTIFICATION_____
SPEC. NO._____
DATE OF MFR._____)

6. NOTES

6.1 Ordering data.- Procurement documents should specify the following:

(a) Title, number, and date of this specification.
(b) Type metal required (see 3.2.1).
(c) Preservation, packaging, packing or marking requirements other than those required by paragraph 5.1 (see 5.2).
(d) Quantity per intermediate container (see 5.2.1.1.1.1).

6.2 The oil specified in 4.4.4.5 is the same as No. 3 oil specified in American Society for Testing Materials Specification D471-57T.

6.3 Information on the technique for manufacturing the types 11M15, 11M25 and 10M50 mounts and recipes for rubber stock and tie-cement formulations are available in the Department of the Navy and will be furnished upon request from prospective bidders. The furnishing of this information will be provided solely for assistance in fabricating mounts and shall not constitute any agreement or obligation by the Government to procure mounts made in accordance with the information. Furthermore the use of this information does not in any way guarantee compliance with this specification.

Notice.- When Government drawings, specifications, or other data are used for any purpose other than in connection with a definitely related Government procurement operation, the United States Government thereby incurs no responsibility nor any obligation whatsoever; and the fact that the Government may have formulated, furnished, or in any way supplied the said drawings, specifications, or other data is not to be regarded by implication or otherwise as in any manner licensing the holder or any other person or corporation, or conveying any rights or permission to manufacture, use, or sell any patented invention that may in any way be related thereto.

Preparing activity:
Navy - Ships
(Project 5340-N044Sh)

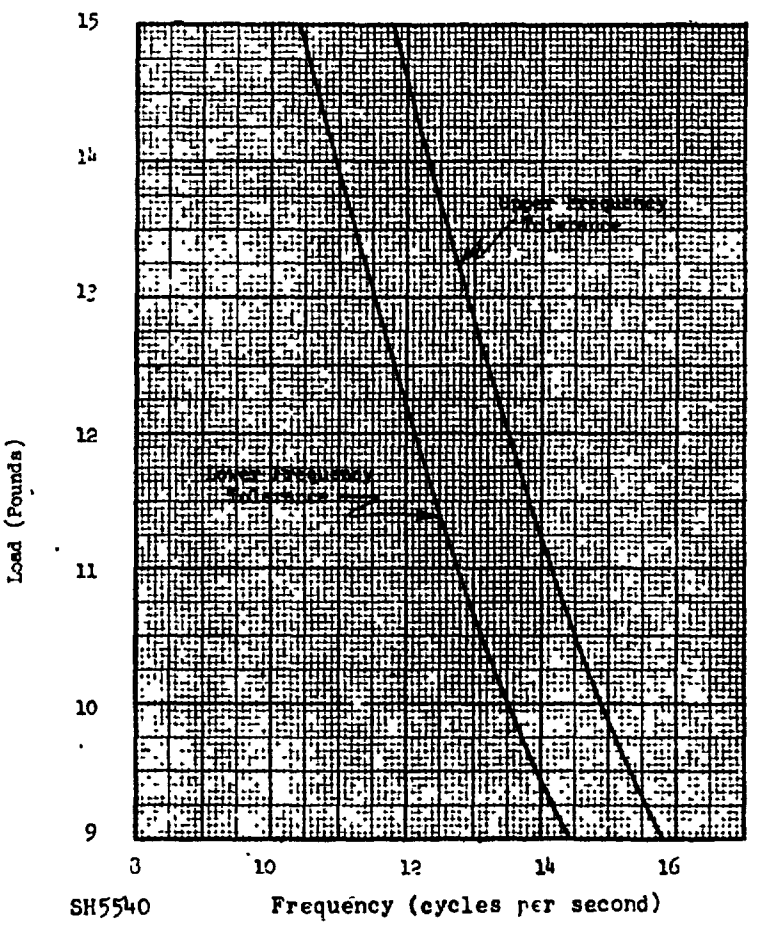

Figure 1 - Resonant frequency tolerance versus load for type 11M15 mount.

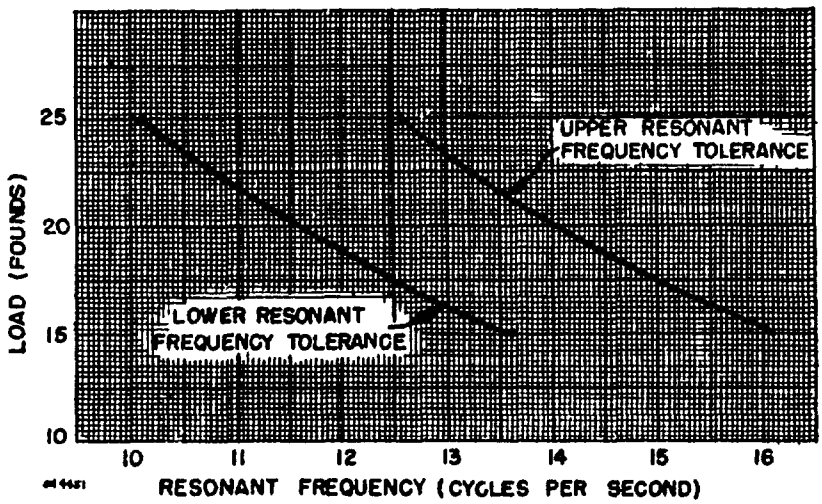

Figure 2 - Resonant frequency tolerance versus load for type 11M25 mount.

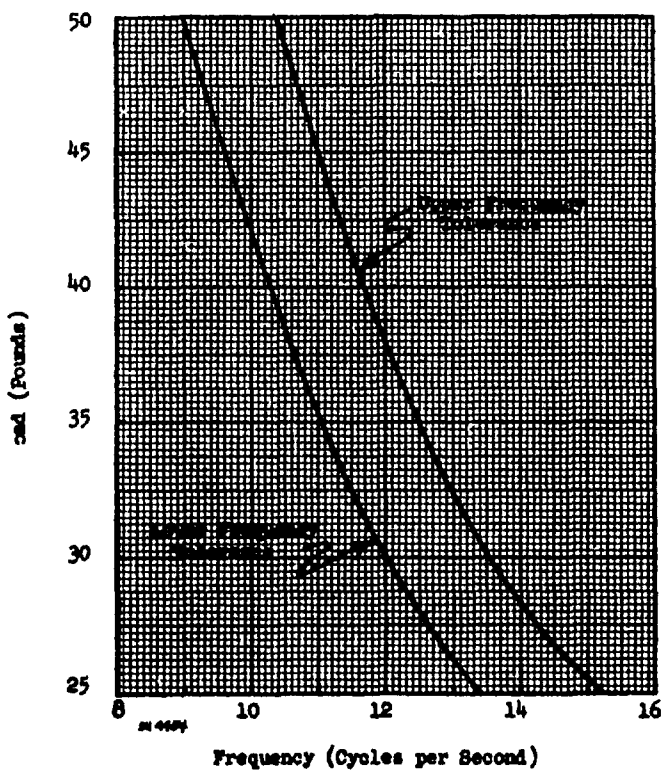

Figure 3 - Resonant frequency tolerance versus load for type 10M50 mount.

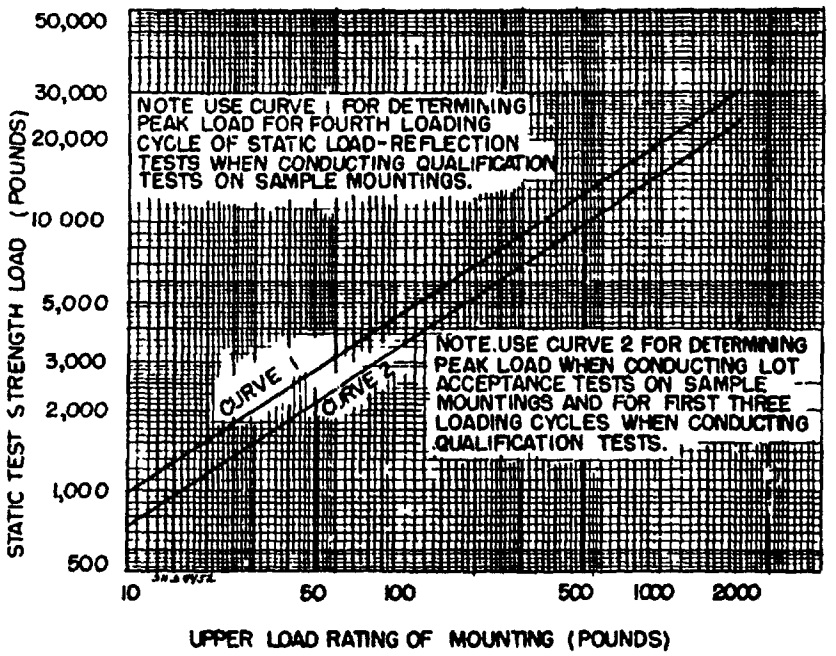

Figure 4 - Minimum static test strength loads for resilient mounts.

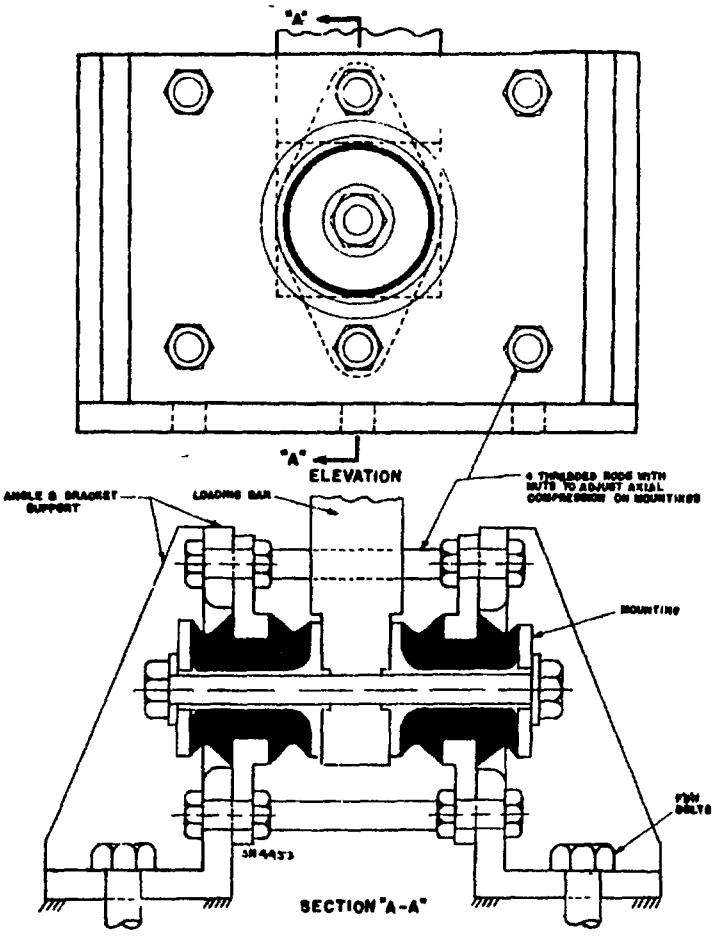

Figure 5 - Jig for holding mounts when conducting static load deflection tests in the radial direction.

SPECIFICATION ANALYSIS SHEET

Form Approved
Budget Bureau No 119-R004

INSTRUCTIONS

This sheet is to be filled out by personnel either Government or contractor involved in the use of the specification or procurement of products for ultimate use by the Department of Defense. This sheet is provided for obtaining information with the use of this specification which will insure that such products can be procured with a minimum amount of delay and at the least cost. Comments and the return of this form will be appreciated. Fold on lines on reverse side, staple in corner, and send to preparing activity (as indicated on reverse hereof)

SPECIFICATION

ORGANIZATION (of submitter)		CITY AND STATE
CONTRACT NO	QUANTITY OF ITEM PROCURED	DOLLAR AMOUNT $

MATERIAL PROCURED UNDER A

☐ DIRECT GOVERNMENT CONTRACT ☐ SUBCONTRACT

1 HAS ANY PART OF THE SPECIFICATION CREATED PROBLEMS OR REQUIRED INTERPRETATION IN PROCUREMENT USE?

A GIVE PARAGRAPH NUMBER AND WORDING

B RECOMMENDATIONS FOR CORRECTING THE DEFICIENCIES.

2 COMMENTS ON ANY SPECIFICATION REQUIREMENT CONSIDERED TOO RIGID

3. IS THE SPECIFICATION RESTRICTIVE?

☐ YES ☐ NO IF "YES", IN WHAT WAY?

4. REMARKS *(Attach any pertinent data which may be of use in improving this specification. If there are additional papers, attach to form and place both in an envelope addressed to preparing activity)*

SUBMITTED BY *(Printed or typed name and activity)*	DATE

DD FORM 1426 PREVIOUS EDITIONS OF THIS FORM ARE OBSOLETE

FOLD

DEPARTMENT OF THE NAVY

POSTAGE AND FEES PAID
NAVY DEPARTMENT

OFFICIAL BUSINESS

Commander
Naval Ship Engineering Center
Center Building
Prince George's Center
Hyattsville, Maryland 20782

FOLD

PLATE NO. 15419 (BACK)