MIL-M-17191D(SHIPS)
22 September 1970
SUPERSEDING
MIL-M-17191C(SHIPS)
15 October 1956
(See 6.7)

MILITARY SPECIFICATION

MOUNTS, RESILIENT; PORTSMOUTH

BONDED SPOOL TYPE

1. SCOPE

1.1 Scope. This specification covers the Portsmouth bonded spool type series of rubber resilient mounts, together with tests for evaluating the rubber stock and the completely assembled mount. These mounts are primarily for use on submarines where applicable.

1.2 Classification.

1.2.1 Type designation. The bonded spool type resilient mount shall conform to Drawing 5000-S1112-F-1385777 and be designated as follows:

Types

| | |
|---|---|
| 15P50A | 15P700A |
| 15P100A | 15P700B |
| 15P150A | 15P800A |
| 15P220A | 15P800B |
| 15P300A | 15P1000A |
| 15P400A | 15P1000B |
| 15P400B | 15P1200A |
| 15P550A | 15P1200B |
| 15P550B | 15P2000A |
| | 15P2000B |

1.2.1.2 The type designation is arbitrarily established based upon the upper load rating characteristics of the mount. The numbers and letters in the type designation denote the following:

First number - Denotes the natural frequency in the axial direction under upper rated load (cycles per second (c.p.s.)).
Letter P - Denotes the mount design activity (Portsmouth Naval Shipyard).
Second number - Denotes the upper load rating (pounds).
Letters A and B - Denotes mount design.

1.2.2 Rubber stock class. The rubber stocks for the resilient elements of the mounts shall be furnished in 4 classes for the particular type of mount shown in table I (see 6.2).

Table I - Bonded spool type mounts.

| Mount type | Rubber stock |
|---|---|
| 15P50A<br>15P150A<br>15P400A<br>15P400B | Class A |
| 15P100A<br>15P220A<br>15P550A<br>15P550B<br>15P800A<br>15P800B | Class B |

Table I - Bonded spool type mounts (cont'd).

| Mount type | Rubber stock |
|---|---|
| 15P300A<br>15P700A<br>15P700B<br>15P1000A<br>15P1000B | Class C |
| 15P1200A<br>15P1200B<br>15P2000A<br>15P2000B | Class D |

2. APPLICABLE DOCUMENTS

2.1 The following documents of the issue in effect on date of invitation for bids or request for proposal, form a part of the specification to the extent specified herein.

SPECIFICATIONS

MILITARY
MIL-P-116 - Preservation, Methods of.
MIL-M-17185 - Mounts, Resilient; General Specifications and Tests For (Shipboard Application).
MIL-I-45208 - Inspection System Requirements.

FEDERAL
PPP-B-636 - Box, Fiberboard.
PPP-B-640 - Boxes, Fiberboard, Corrugated, Triple-Wall.

STANDARDS

FEDERAL
FED-STD-601 - Rubber: Sampling and Testing.

MILITARY
MIL-STD-105 - Sampling Procedures and Tables for Inspection by Attributes.
MIL-STD-129 - Marking for Shipment and Storage.
MIL-STD-407 - Visual Inspection Guide for Rubber Molded Items.

DRAWINGS

BUREAU OF SHIPS
5000-S1112-F-1385777 - Mountings Resilient, Portsmouth Bonded Spool Type.

(Copies of specifications, standards, drawings, and publications required by suppliers in connection with specific procurement functions should be obtained from the procuring activity or as directed by the contracting officer.)

2.2 Other publications. The following documents form a part of this specification to the extent specified herein. Unless otherwise indicated, the issue in effect on date of invitation for bids or request for proposal shall apply.

UNIFORM CLASSIFICATION COMMITTEE
Uniform Freight Classification Rules

(Application for copies should be addressed to the Uniform Classification Committee, 202 Union Station, 516 West Jackson Boulevard, Chicago, Illinois 60606.)

NATIONAL CLASSIFICATION BOARD
National Motor Freight Classification Rules

(Application for copies should be addressed to the National Motor Freight Traffic Association, Inc., 1616 "P" Street, N.W., Washington, D.C. 20036.)

AMERICAN SOCIETY FOR TESTING AND MATERIALS (ASTM)
D412-68 - Tension Testing of Rubber Products.

(Application for copies should be addressed to the American Society for Testing and Materials, 1916 Race Street, Philadelphia, Pennsylvania 19103.)

3. REQUIREMENTS

3.1 Qualification. The mounts furnished under this specification shall be a product which has been tested, and passed the qualification tests specified herein, and has been listed on or approved for listing on the applicable qualified products list.

3.2 Materials.

3.2.1 Metal. The metal components of the mount shall be of material equivalent to that specified on the drawings for the mounts. The Naval Ship Engineering Center (NAVSEC) shall specify (see 6.2) whether the mounts are to be manufactured from steel or manganese bronze as shown on Drawing 5000-S1112-F-1385777. The metal components for the particular type mount shall be formed to shape and finish in accordance with the dimensions and allowable tolerances specified by the applicable mount drawing.

3.2.2 Rubber.

3.2.2.1 Resilient element. The resilient element shall be fabricated of oil resistant compounds utilizing polymerized chloroprene or a copolymer product of butadiene and acrylonitrile as the basic material, molded to the prescribed form, and bonded firmly to the metal components as shown on Drawing 5000-S1112-F-1385777.

3.2.2.1.1 Delamination. There shall be no delamination nor air pockets in any portion of the resilient element of the finished mount.

3.2.2.1.2 Bond. The resilient element shall be completely bonded to all metal components of the mount with which it makes contact.

3.2.2.1.3 Surface condition. There shall be no backrinding nor blisters on the outer surfaces of the finished mount.

3.2.2.1.4 Physical requirements. The four classes of rubber stock used in the resilient elements shall conform to the physical requirements specified in table II.

Table II - Physical requirements.

| | Class A | Class B | Class C | Class D |
|---|---|---|---|---|
| Tensile strength (minimum) | | | | |
| Before aging, p.s.i. | 2200 | 2500 | 2800 | 2900 |
| After aging at 194°F. for 46 hours, p.s.i. | 2100 | 2400 | 2700 | 2800 |
| Elongation at break (percent minimum) | | | | |
| Before aging | 650 | 600 | 575 | 550 |
| After aging at 194°F. for 46 hours | 600 | 550 | 525 | 500 |
| Compression set (percent maximum) | 40 | 37 | 34 | 30 |
| Adhesion of resilient element to metal (minimum - p.s.i.) | 450 | 500 | 550 | 600 |
| Hardness, Shore A after 3 seconds | 38 ± 5 | 43 ± 5 | 48 ± 5 | 57 ± 5 |
| Resistance to oil swelling (percent maximum) | 15 | 15 | 15 | 15 |

3.2.3 Substitutions. Unless otherwise specified in the contract or order (see 6.2), the materials used in the manufacture of the bonded spool type series of mounts shall conform to this specification. If the manufacturer desires to substitute for a specified or previously approved material or fabricated part, he shall submit to NAVSEC a statement to that effect, describing the proposed substitution together with evidence to substantiate his claim that such a substitute is suitable. The acceptance or approval of any substitute

material by NAVSEC shall not, prior to qualification tests, be construed as a guaranty of the acceptance of the finished mount.

3.2.4 Protective treatment. The metal components used in the manufacture of the mount shall be resistant to, or protected against, corrosion by salt water or spray or other atmospheric conditions encountered in service. Unless otherwise specified in the contract or order (see 6.2), the minimum protective treatment shall be equivalent to that specified on Drawing 5000-S1112-1385777.

3.3 Performance.

3.3.1 Plastic flow. The mounts shall not sustain a loss in height greater than 0.012 inch when tested in accordance with 4.6.4.7.

3.3.2 Uniformity. The resonant frequencies of the bonded spool type mounts shall be within the frequency range of 15 c.p.s. plus or minus 15 percent when tested under upper rated load in accordance with 4.6.4.8.

3.3.3 Static load deflection. The mounts, when tested in accordance with 4.6.4.9, shall not show any appreciable permanent deformation of metal parts, separation, or break in/or between component parts.

3.3.4 Fatigue. The mounts when tested in accordance with 4.6.4.10, shall withstand 400,000 cycles without any signs of failure of the resilient element, bond, and metal parts.

3.3.5 Delamination. The mounts when tested in accordance with 4.6.4.11, shall not show evidence of rubber separation into distinct layers of laminations.

3.4 Identification. Each size mount shall be identified with the marking specified on Drawing 5000-S1112-1385777.

3.5 Workmanship. The workmanship of all phases of work required in the manufacture of the bonded spool type mounts shall be first class in every respect, and shall pass the examinations of 4.4.1.

4. QUALITY ASSURANCE PROVISIONS

4.1 Responsibility for inspection. Unless otherwise specified in the contract or purchase order, the supplier is responsible for the performance of all inspection requirements as specified herein. Except as otherwise specified in the contract or order, the supplier may use his own or any other facilities suitable for the performance of the inspection requirements specified herein, unless disapproved by the Government. The Government reserves the right to perform any of the inspections set forth in the specification where such inspections are deemed necessary to assure supplies and services conform to prescribed requirements.

4.1.1 Inspection system. The inspection system which the supplier is required to maintain, as provided in the inspection clause of the contract or order, shall be in accordance with MIL-I-45208 (see 6.2 and 6.6).

4.2 Qualification tests.[1/] Qualification tests shall be conducted at a laboratory satisfactory to the Naval Ship Engineering Center. Qualification tests shall consist of the tests specified in 4.6.4.

4.3 Sampling.

4.3.1 Samples for qualification.

4.3.1.1 Specific stock samples. For tests specified in 4.6.2, the prospective contractor shall submit samples as specified in table III of each of the four classes of rubber stock specified in 3.2.2.1.4.

1/ Application for Qualification tests shall be made in accordance with "Provisions Governing Qualification SD-6" (see 6.3 and 6.4).

Table III - Stock samples.

| Quantity | Description and size |
|---|---|
| 3 | 6 by 6 inches by 0.080 inch thick molded sheets |
| 3 | Metal adhesion specimens (see 4.6.4.6) |
| 4 | Compression set pellets 1/2 by 1.129 inches |

4.3.1.2 Specific mount samples. If the specific stock samples submitted as specified in 4.3.1.1 meet the requirements and tests specified herein, the prospective contractor shall then submit for tests specified in 4.6.3, 4 mounts of the types specified in table IV and manufactured from the applicable class of rubber stock.

Table IV - Mount samples.

| Mount type | Class of rubber |
|---|---|
| 15P150A or 15P400A | A |
| 15P220A or 15P550A | B |
| 15P300A or 15P700A | C |
| 15P1200A or 15P2000A | D |

4.3.1.3 Molds for qualification test samples. Upon the request of a prospective contractor, the Naval Ship Engineering Center may provide to the prospective contractor, a mold of the size and type required to produce sample mounts to qualify under the various groups listed in 4.3.1.2. The furnishing of molds indicated above is subject to the availability of the molds and whether such molds are suitable for use with the prospective contractor's press or molding equipment.

4.3.1.3.1 Mold modifications. Molds furnished to the prospective contractor by NAVSEC for qualification purposes may be modified to suit the contractor's press or molding equipment, provided the contour of the molded mounts is not affected and that the changes will not require modification to the applicable metal parts, dimensions, and tolerances as shown on Drawing 5000-S1112-F-1385777.

4.3.1.3.2 Responsibility for molds. Unless otherwise specified in the contract or order, (see 6.2), molds furnished for qualification purposes shall be returned to NAVSEC when sample mounts are submitted for qualification tests. The molds shall be returned in as good condition as when received by the prospective contractor. Repair and upkeep of the molds shall be the prospective contractor's responsibility.

4.3.1.3.3 Furnishing of molds by contractor. Upon an award of contract or order and, unless otherwise specified therein (see 6.2), the contractor shall furnish sufficient number and sizes of molds to complete the contract or order. Such molds shall produce bonded spool type mounts having contours as specified on Drawing 5000-S1112-F-1385777.

4.3.2 Sampling for quality conformance.

4.3.2.1 Lot. For purpose of sampling, a lot shall consist of all mounts of the same type, class, and load rating offered for delivery at one time.

4.3.2.2 Sampling for examination. A random sample of mounts shall be selected in accordance with table V from each inspection lot of material offered for examination of visual and dimensional characteristics with lot acceptance based on the sampling inspection requirements in accordance with MIL-STD-105.

4.3.2.3 Rubber stock sampling. A set of sample specimens of the applicable quantity, size, and class specified in 4.3.1.1 from each batch of rubber stock mixed and at least 1 set of samples from each 450 pounds mixed shall be subjected to tests outlined in 4.4.5.

Table V - Sampling for visual and dimensional examination
AQL (approx.) = 1.5 percent defective.

| Number of mounts in a lot | Number of mounts in sample | Major defects | | Total defects | |
|---|---|---|---|---|---|
| | | Acceptance number (defectives) | Rejection number (defectives) | Acceptance number (defectives) | Rejection number (defectives) |
| 40 or under | 10 | 0 | 1 | 1 | 2 |
| 41 to 110 | 15 | 0 | 1 | 1 | 2 |
| 111 to 300 | 25 | 1 | 2 | 2 | 3 |
| 301 to 500 | 35 | 1 | 2 | 3 | 4 |
| 501 to 800 | 50 | 2 | 3 | 4 | 5 |
| 801 to 1300 | 75 | 3 | 4 | 6 | 7 |
| 1301 to 3200 | 110 | 4 | 5 | 8 | 9 |

The equivalent double or multiple sampling plan from MIL-STD-105 may be used.

4.3.2.4 Sampling of mounts. For the tests specified in 4.4.4, samples shall be selected in accordance with table VI.

Table VI - Sampling of mounts and number of samples and failures permitted.

| Number of mounts in lot | Sample quantities | | | Maximum allowable number of failures | | | |
|---|---|---|---|---|---|---|---|
| | | | | In first sample quantity | | In 1st and 2nd sample quantities combined | |
| | First sample quantity | Second sample quantity | 1st and 2nd sample quantities combined | For any 1 test | For all tests combined | For any 1 test | For all tests combined |
| 2 to 8 | Use single sampling plan for these lots | | 3 | - | - | 0 | 0 |
| 9 to 15 | | | 4 | - | - | 0 | 0 |
| 16 to 25 | | | 5 | - | - | 0 | 0 |
| 26 to 40 | | | 6 | - | - | 0 | 0 |
| 41 to 65 | 4 | 4 | 8 | 0 | 0 | 1 | 1 |
| 66 to 110 | 5 | 5 | 10 | 0 | 0 | 1 | 1 |
| 111 to 180 | 6 | 6 | 12 | 0 | 0 | 1 | 1 |
| 181 to 300 | 8 | 8 | 16 | 1 | 1 | 1 | 2 |
| 301 to 500 | 10 | 10 | 20 | 1 | 1 | 2 | 2 |
| 501 to 800 | 12 | 12 | 24 | 1 | 1 | 2 | 3 |
| 801 to 1300 | 15 | 15 | 30 | 1 | 2 | 2 | 3 |
| 1301 to 3200 | 20 | 20 | 40 | 2 | 2 | 3 | 4 |

4.3.2.4.1 Number of samples and failures permitted. For lots consisting of 40 mounts or less, a single sampling plan for these lots shall be used. The number of mounts shown in the column marked "1st and 2nd sample quantities combined" shall be selected at random and subjected to tests. For lots consisting of more than 40 mounts, the quantities shown in column marked "First sample quantity" shall be selected.

4.4 Visual and dimensional examination.

4.4.1 Each of the sample mounts selected in accordance with 4.3.2.2 shall be visually and dimensionally examined to verify compliance with this specification. MIL-STD-407 shall be used to determine and evaluate defects through visual examination.

4.4.2 Any mount in the sample containing one or more major visual or dimensional defects according to MIL-STD-407 shall be rejected and counted against the AQL for major defects. Any mount containing more than one minor defect shall be rejected and counted against the AQL for total defects. Any mount containing only one minor defect (no major defect) shall be counted a minor defective against the AQL for total defectives but shall not be rejected.

4.4.3 If in any sample the number of defective mounts as defined above exceeds the acceptance number for either AQL for that sample, the lot represented by the sample shall be rejected.

4.4.4 Tests of mounts. The samples selected in accordance with 4.3.2.4 shall be subjected to the tests specified in table VII in the order listed.

Table VII - Lot acceptance tests on mounts

| Test | Paragraph |
|---|---|
| Uniformity | Tests shall be in accordance with 4.6.4.8. |
| Static load deflection | Test shall be in accordance with 4.6.4.9.2 modified as follows: The mounts shall be subjected to 4 loading and unloading cycles in the axial direction. For each loading cycle, loads shall be applied up to the load specified on curve number 2 of figure 1 for the particular upper load rating for the mount. Deflection rate shall not exceed 0.3 inch per minute. |

4.4.5 Tests of rubber stock. Samples of rubber stock selected in accordance with 4.3.2.3 shall be subjected to the tests specified in table VIII.

Table VIII - Tests of rubber stock.

| Test | Paragraph |
|---|---|
| Tensile strength | 4.6.4.1 and 4.6.4.3 |
| Elongation | 4.6.4.1 and 4.6.4.3 |
| Hardness | 4.6.4.4 |

4.5 Comparison inspection. Comparison inspection may be required by NAVSEC in any contract or order. These tests shall consist of the tests specified in 4.6.4.

4.6 Test procedures.

4.6.1 Standard test conditions. Unless otherwise specified in the contract or order (see 6.2), all tests shall be made within an ambient air temperature range of 80 plus or minus 10°F. Within this range, the temperature from the beginning to the end of any one test shall not vary more than plus or minus 5°F.

4.6.2 The rubber stock samples specified in 4.3.1.1 shall be subjected to the following tests:

(a) Initial tensile strength (see 4.6.4.1).
(b) Initial ultimate elongation (see 4.6.4.1).
(c) Tensile strength after oven aging (see 4.6.4.1 and 4.6.4.3).
(d) Ultimate elongation after oven aging (see 4.6.4.1 and 4.6.4.3).
(e) Compression set after oven aging (see 4.6.4.2 and 4.6.4.3).
(f) Hardness, Shore A (see 4.6.4.4).
(g) Resistance to oil, percent swelling (see 4.6.4.5).
(h) Adhesion to metal (see 4.6.4.6).

4.6.3 Two of the mount samples specified in 4.3.1.2 shall be subjected to the following inspection and tests:

(a) Examination (see 4.4).
(b) Uniformity (see 4.6.4.8).
(c) Static load deflection (see 4.6.4.9).

The remaining 2 mount samples specified in 4.3.1.2 shall be subjected to the following inspection and tests:

(a) Examination (see 4.4).
(b) Plastic flow (see 4.6.4.7).
(c) Uniformity (see 4.6.4.8).
(d) Fatigue (see 4.6.4.10).
(e) Delamination (see 4.6.4.11).

4.6.4 Method of tests.

4.6.4.1 Tensile and elongation tests. For tensile strength and elongation the method of tests shall be in accordance with Method 4111 of FED-STD-601, and ASTM D412-68, respectively. Die III test specimens shall be used.

4.6.4.2 Compression set.

4.6.4.2.1 Compression set after aging. Compression set shall be determined in accordance with method 3311 of FED-STD-601 except aging shall be at 194° ± 2°F. (90° ± 1.1°C.) for 46 ± 1/4 hours.

4.6.4.2.2 Cold compression set. Cold compression set shall be determined in accordance with method 5411 of FED-STD-601 except the exposure shall be at 30° ± 2°F. (-1.1 ± 1.1°C.) for 94 ± 1/2 hours. Compression set 30 minutes after compression, only, shall be recorded.

4.6.4.3 Aging test. The specimens for tensile, elongation, and compression set tests shall be given an accelerated aging test by subjecting them to dry circulating air at a temperature of 104°F. ± 2°F. (90°C ± 1.1°C.) for 46 ± 1/4 hours. Final determination of aged tensile and elongation specimens shall be made not less than 10 hours nor more than 48 hours after removal from the oven. Tensile and elongation tests on unaged specimens shall be made immediately prior to, and on the same machine as, the tensile tests on the aged specimens.

4.6.4.4 Hardness test. The hardness shall be determined in accordance with method 3021 of FED-STD-601 with a shore durometer. Specimens shall be stock samples (see 4.3.1.1 and 4.6.2).

4.6.4.5 Swelling in oil.

4.6.4.5.1 Swelling in oil (stocks). Swelling shall be determined in accordance with method 6211 of FED-STD-601 except the thickness of the specimen shall be 0.08 ± 0.01 inch. The immersion medium shall be medium number 3 of method 6001 of FED-STD-601.

4.6.4.6 Adhesion to metal test.

4.6.4.6.1 Apparatus. A tension testing machine shall be used for measuring the strength of adhesion. The moving head of the machine shall travel at a rate of 1 inch per minute. The machine shall provide a recording device to give the total pull in pounds at the conclusion of the tests.

4.6.4.6.2 Test specimen. The standard test specimen shall consist of a cylinder or rubber 0.125 plus or minus 0.005 inch in thickness and 1.597 plus or minus 0.001 inches in diameter having its circular ends bonded to the faces of 2 metal plates each 0.375 inch in thickness and of the same diameter as the rubber cylinder. The metal plate shall have smooth flat faces which shall be parallel in the finished specimen. The metal plates shall be machined from roll bar steel, each having on the back face a round stud 1/2 inch in diameter and 3/4 inch in length, threaded with 20 NC, fit 3 threads per inch. The specimens shall be prepared by the same molding procedure used in molding the assembled mounts offered for delivery.

4.6.4.6.3 Procedure. The test specimens shall be kept at a room temperature for at least 24 hours before being tested. The specimen is then mounted in the tension testing machine using care in centering and adjustment so that the tension shall be uniformly distributed. A steady tension load shall then be applied at 1 inch per minute until the rubber separates from the metal surface or ruptures. Tests shall be conducted on 3 specimens and their results averaged. The adhesion value shall be expressed in pounds per square inch and shall be calculated by dividing the tension load causing failure by the original area of the adhered surface.

4.6.4.7 Plastic flow test. For plastic flow test, the mount shall be loaded for 96 hours with a weight equal to the mount upper load rating. The loss of height in the resilient element measured 1 hour after application of load and again at the end of the period shall be measured with a dial gage having a 0.001 inch sensitivity. Tests shall be conducted at room temperature of 80° plus or minus 5°F.

4.6.4.8 Uniformity tests. The uniformity of mounts shall be evaluated by determining the resonant frequencies of the mounts in the axial direction when loaded at 70, 80, 90, and 100 percent times the upper load rating of the mounts. The resonant frequencies obtained on the mounts under the same load shall be averaged. From this data, a curve of average resonant frequencies versus loads shall be plotted.

4.6.4.9 Static load deflection test.

4.6.4.9.1 Apparatus. A universal type testing machine may be employed to conduct static load deflection tests on mounts. The testing machine should be equipped with a space control which will load the mount at a constant deflection rate. If such equipment is not available, the incremental load method specified in MIL-M-17185, modified to give the order of loadings specified in 4.6.4.9.2 may be employed.

4.6.4.9.2 Test in the axial direction (parallel to center bolt axis) on the universal testing machine. When load deflection tests are conducted in the axial direction, a single mount shall be secured in a suitable jig and subjected to 4 loading and unloading cycles. For the first 3 loading cycles, the loads shall be applied at a deflection rate not exceeding 0.3 inch per minute, up to the load specified on curve No. 2 of figure 1 for the upper load rating of the mount. For the fourth loading cycle, the mount shall be loaded up to the peak load specified on curve No. 1 of figure 1 for the upper load rating of the mount. The fourth loading and unloading cycle shall be reported as the static load deflection curve for the mount.

4.6.4.9.3 Test in the radial direction (perpendicular to the center bolt axis) on the universal testing machine. When load deflection tests are conducted in the radial direction 2 mounts shall be secured in a jig similar to that shown on figure 2. Each mount shall be compressed axially to that amount which its upper load rating deflected the mount during static load deflection test in the axial direction. This compression is obtained by adjusting nuts on 4 rods which changes the distance between the angle and bracket supports with respect to the loading bar. After the 2 mounts have been assembled in the jig and secured they shall be subjected to 4 loading and unloading cycles in accordance with the procedure specified in 4.6.4.9.2.

4.6.4.10 Fatigue test.

4.6.4.10.1 Apparatus. A suitable type shaker shall be used for conducting the fatigue test.

4.6.4.10.2 Procedure. The mount(s) shall be secured to the mounting bracket of the machine and subjected to 400,000 cycles of 3/16 inch deflections measured from a neutral unloaded position. The cycling shall be done in the axial direction at the rate of 175 cycles per minute.

4.6.4.11 Delamination test.

4.6.4.11.1 Method of test. One of the mounts previously used for fatigue or static load-deflection tests shall be cut into 2 parts and immersed in benzol, conforming to the characteristics specified in 4.6.4.11.2, for 24 hours at a temperature of 80° plus or minus 5°F. After removal from benzol, the sections of the mount shall be examined to determine evidence of separation into distinct layers or laminations.

4.6.4.11.2 Benzol. The benzol shall be a pure, water-white grade, free from suspended matter and conforming to the following characteristics:

Specific gravity at 60°F.----------0.875 to 0.886
Distillation limits:
- Initial boil point ---------- 168° to 172°F.
- 95 percent evaporated -------- 174°F. (maximum).
- Dry ---------- 176°F. (maximum).
- Recovery ---------- 98 percent (minimum).

4.7 Inspection of preparation for delivery. Sample packages and packs, and the inspection of the preservation-packaging, packing, and marking, shall be in accordance with the requirements of section 5, and the documents specified therein.

5. PREPARATION FOR DELIVERY

(The preparation for delivery requirements specified herein apply only for direct Government procurements.)

5.1 Preservation-packaging. Preservation-packaging shall be level A or C, as specified (see 6.2).

5.1.1 Level A. Mounts shall be cleaned by process C-1; dried by procedure D-1 or D-4, and unit protected in accordance with method III of MIL-P-116, as follows:

(a) Each mount, after cleaning and drying, shall be wrapped with a neutral (non-corrosive) opaque or transparent plastic paper or film which shall be secured by means of pressure-sensitive tape.
(b) Each wrapped mount shall then be placed in a fiberboard, type CF or SF, class weather-resistant, grade W5 or W6 box conforming to PPP-B-636.

5.1.2 Level C. Mounts shall be individually packaged in a manner which shall insure protection against deterioration, physical and mechanical damage during shipment, from the supply source to the first receiving activity for immediate use.

5.2 Packing. Packing shall be level A, B, or C, as specified (see 6.2).

5.2.1 Level A. Mounts, preserved-packaged as specified (see 6.2), shall be packed for shipment in snug fitting fiberboard boxes conforming to any one of the following specifications at the option of the contractor.

| Specification | Container | Class |
|---|---|---|
| PPP-B-636 | Fiberboard | Weather-resistant |
| PPP-B-640 | Fiberboard, corrugated triple wall | Class 2 |

Selection of the box type, variety, grade and style shall be at the supplier's option. Box waterproofing and reinforcing shall be accomplished by means of pressure-sensitive tapes in accordance with the appendix to the applicable box specification.

5.2.2 Level B. Mounts, preserved-packaged as specified (see 6.2), shall be packed for shipment in snug fitting fiberboard boxes, as specified in 5.2.1, except that the box shall be of the nonweather resistant class. Selection of the box type, variety, grade and style shall be at the supplier's option.

5.2.3 Level C. Mounts, preserved-packaged as specified (see 6.2), shall be packed in containers acceptable to the common carrier and which shall insure safe delivery at destination in a satisfactory condition at the lowest applicable rate. Containers, packing or method of shipment, shall comply with the Uniform Freight and the National Motor Freight Classification Rules or regulations or other carrier rules, as applicable to the mode of transportation.

5.3 Marking. In addition to any special markings required by the contract or order (see 6.2), interior packages (unit and intermediate) and exterior shipping containers shall be marked in accordance with MIL-STD-129 and the following:

Interior packages. Each package shall be marked with the following information completed:

MOUNT IDENTIFICATION _____
SPECIFICATION NO. _____
DATE OF MFR. _____
DATE CURED _____
TYPE SHELF LIFE _____

Shipping containers. Each shipping container shall be marked on two adjacent with the following information completed:

MOUNT IDENTIFICATION _____
SPECIFICATION NO. _____
DATE OF MFR. _____
DATE CURED _____

6. NOTES

6.1 Intended use. Mounts are intended for use in mounting equipment for noise and vibration isolation.

6.2 Ordering data. Procurement documents should specify the following:

(a) Title, number, and date of this specification.
(b) Mount, number, type, and class of rubber stock required (see 1.2.2).
(c) Type of material to be used in the manufacture of metal parts (see 3.2.1 and 3.2.3).
(d) Protective treatment of metal, if other than specified (see 3.2.4).
(e) Procurement documents should specify the quality assurance requirements (see 4.1.1).
(f) Responsibility for molds (see 4.3.1.3.2 and 4.3.1.3.3).
(g) Test conditions (see 4.6.1).
(h) Level or preservation-packaging and level of packing required (see 5.1 and 5.2).
(i) Special marking required (see 5.3).

6.3 With respect to products requiring qualification, awards will be made only for products which are at the time set for opening of bids, qualified for inclusion in applicable Qualified Products List QPL 17191 whether or not such products have actually been so listed by that date. The attention of the suppliers is called to this requirement, and manufacturers are urged to arrange to have the products that they propose to offer to the Federal Government tested for qualification in order that they may be eligible to be awarded contracts or orders for the products covered by this specification. The activity responsible for the Qualified Products List is the Naval Ship Engineering Center, Prince George's Center, Center Building, Hyattsville, Maryland 20782, and information pertaining to qualification of products may be obtained from that activity. Application for Qualification tests shall be made in accordance with "Provisions Governing Qualification SD-6" (see 6.4).

6.4 Copies of "Provisions Governing Qualification SD-6" may be obtained upon application to Commanding Officer, Naval Publications and Forms Center, 5801 Tabor Avenue, Philadelphia, Pennsylvania 19120.

6.5 Sub-contracted material and parts. The preparation for delivery requirements of referenced documents listed in Section 2 do not apply when material and parts are procured by the supplier for incorporation into the equipment and lose their separate identity when the equipment is shipped.

6.6 Management control system document. The following management control system document should be included on DD Form 1660:

(a) MIL-I-45208 (see 4.1.1).

6.7 CHANGES FROM PREVIOUS ISSUE. THE OUTSIDE MARGINS OF THIS DOCUMENT HAVE BEEN MARKED "#" TO INDICATE WHERE CHANGES (DELETIONS, ADDITIONS, ETC.) FROM THE PREVIOUS ISSUE HAVE BEEN MADE. THIS HAS BEEN DONE AS A CONVENIENCE ONLY AND THE GOVERNMENT ASSUMES NO LIABILITY WHATSOEVER FOR ANY INACCURACIES IN THESE NOTATIONS. BIDDERS AND CONTRACTORS ARE CAUTIONED TO EVALUATE THE REQUIREMENTS OF THIS DOCUMENT BASED ON THE ENTIRE CONTENT AS WRITTEN IRRESPECTIVE OF THE MARGINAL NOTATIONS AND RELATIONSHIP TO THE LAST PREVIOUS ISSUE.

Preparing activity:
Navy - SH
(Project 5340-N047)

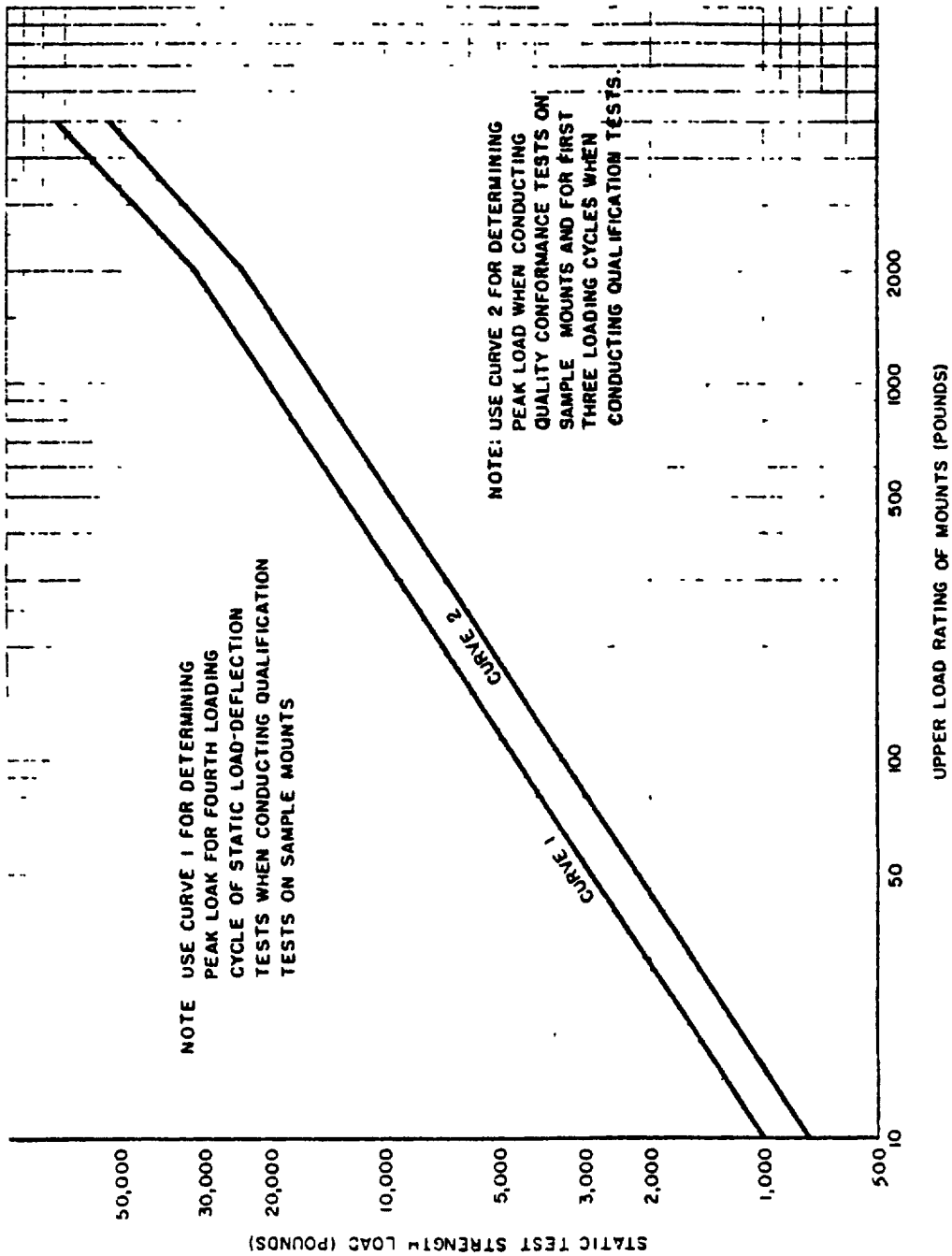


SH1378

Figure 1 - Minimum static test strength loads for resilient mountings.

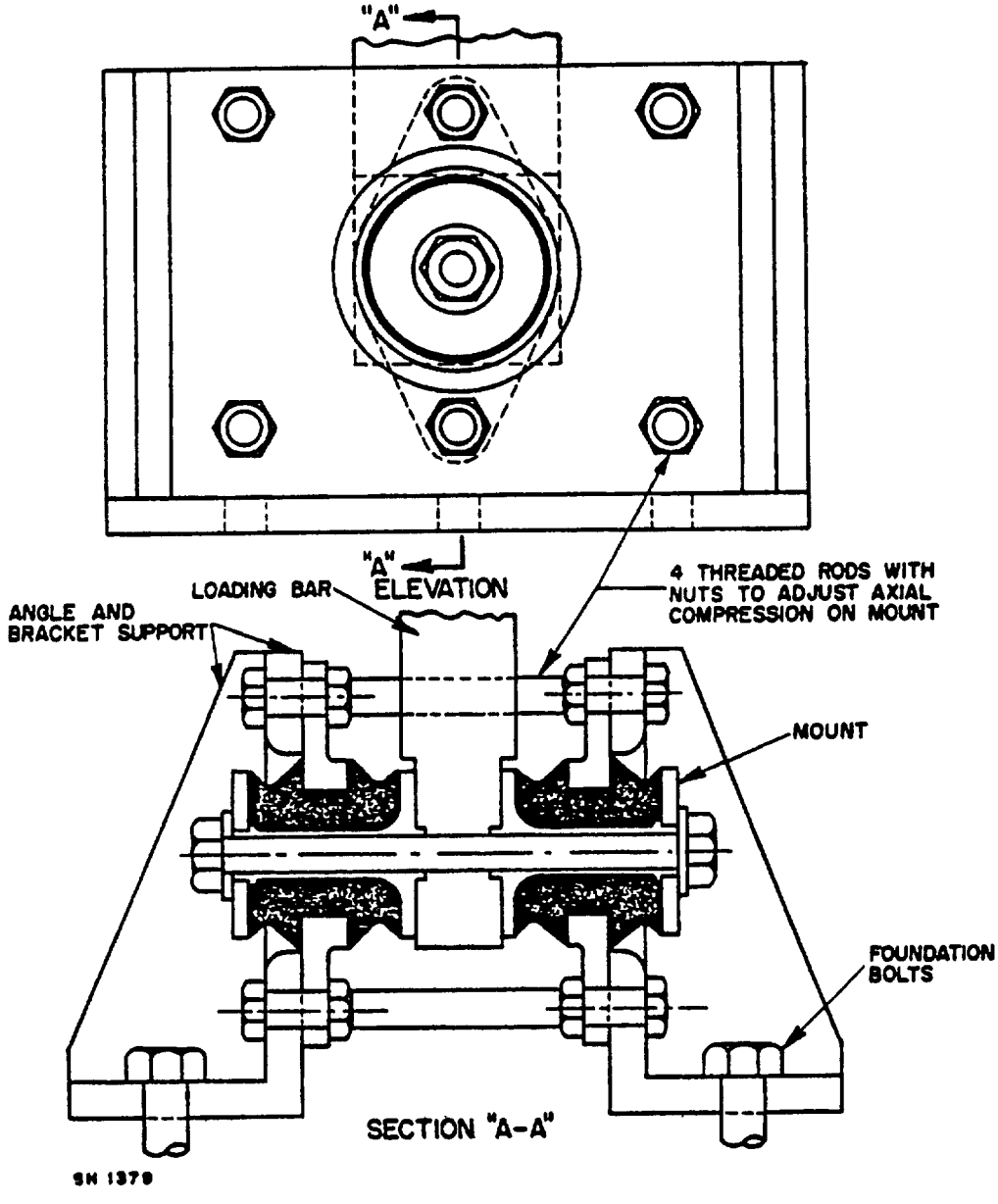


Figure 2 - Jig for holding mounts when conducting static load deflection tests in the radial direction.

**INSTRUCTIONS:** In a continuing effort to make our standardization documents better, the DoD provides this form for use in submitting comments and suggestions for improvements. All users of military standardization documents are invited to provide suggestions. This form may be detached, folded along the lines indicated, taped along the loose edge *(DO NOT STAPLE)*, and mailed. In block 5, be as specific as possible about particular problem areas such as wording which required interpretation, was too rigid, restrictive, loose, ambiguous, or was incompatible, and give proposed wording changes which would alleviate the problems. Enter in block 6 any remarks not related to a specific paragraph of the document. If block 7 is filled out, an acknowledgement will be mailed to you within 30 days to let you know that your comments were received and are being considered.

*NOTE.* This form may not be used to request copies of documents, nor to request waivers, deviations, or clarification of specification requirements on current contracts. Comments submitted on this form do not constitute or imply authorization to waive any portion of the referenced document*(s)* or to amend contractual requirements.

*(Fold along this line)*

*(Fold along this line)*

DEPARTMENT OF THE NAVY

NO POSTAGE NECESSARY IF MAILED IN THE UNITED STATES

OFFICIAL BUSINESS
PENALTY FOR PRIVATE USE $300

BUSINESS REPLY MAIL
FIRST CLASS PERMIT NO. 12503 WASHINGTON D C

POSTAGE WILL BE PAID BY THE DEPARTMENT OF THE NAVY

COMMANDER
NAVAL SHIP ENGINEERING CENTER
CENTER BUILDING - SEC 6124B
PRINCE GEORGE'S CENTER
HYATTSVILLE, MARYLAND 20782

(TO DETACH THIS FORM, CUT ALONG THIS LINE.)

# STANDARDIZATION DOCUMENT IMPROVEMENT PROPOSAL

*(See Instructions – Reverse Side)*

1. DOCUMENT NUMBER

2. DOCUMENT TITLE

3a. NAME OF SUBMITTING ORGANIZATION

b. ADDRESS *(Street, City, State, ZIP Code)*

4. TYPE OF ORGANIZATION *(Mark one)*

- ☐ VENDOR
- ☐ USER
- ☐ MANUFACTURER
- ☐ OTHER *(Specify)*. _____

5. PROBLEM AREAS

a. Paragraph Number and Wording:

b. Recommended Wording.

c. Reason/Rationale for Recommendation:

6. REMARKS

7a. NAME OF SUBMITTER *(Last, First, MI)* – Optional

b. WORK TELEPHONE NUMBER *(Include Area Code)* – Optional

c. MAILING ADDRESS *(Street, City, State, ZIP Code)* – Optional

8. DATE OF SUBMISSION *(YYMMDD)*

DD FORM 1426 PREVIOUS EDITION IS OBSOLETE.