Downloaded from http://www.everyspec.com

MIL-I-9229A(USAF)
20 OCT 86

SUPERSEDING
MIL-I-9229(USAF)
4 SEP 1953

MILITARY SPECIFICATION
INDICATOR, COURSE ID-387/ARN

This specification is approved for use within the Department of the Air Force and is available for use by all Departments and Agencies of the Department of Defense.

1. SCOPE

1.1 Scope. This specification covers one type of electrical indicating instrument, designated Indicator, Course ID-387/ARN.

2. APPLICABLE DOCUMENTS

2.1 Government documents.

2.1.1 Specifications and standards. The following specifications and standards form a part of this specification to the extent specified herein. Unless otherwise specified, the issues of these documents shall be those listed in the issue of the Department of Defense Index of Specifications and Standards (DoDISS) and supplement thereto, cited in the solicitation.

Beneficial comments (recommendations, additions, deletions) and any pertinent data which may be of use in improving this document should be addressed to: WR-ALC/MMIRGN, Robins AFB, GA 31096-5609 by using the self-addressed Standardization Document Improvement Proposal (DD Form 1426) appearing at the end of this document or by letter.

AMSC N/A FSC 5826
DISTRIBUTION STATEMENT A: Approved for public release; distribution is unlimited.

Downloaded from http://www.everyspec.com

SPECIFICATIONS

FEDERAL

L-P-513	Plastic Sheet and Insulation Sheet, Electrical (Laminated, Thermosetting, Paper Base, Phenolic Resin)
PPP-B-636	Boxes, Fiber
QQ-M-151	Metals; General Specification for Inspection of
QQ-Z-325	Zinc Coating, Electrodeposited

MILITARY

MIL-M-14	Molding Plastics and Molded Plastic Parts, Thermosetting
MIL-P-116	Preservation, Methods of
MIL-P-997	Plastic-Material, Laminated, Thermosetting, Electrical-Insulating; Sheets, Glass Cloth, Silicone Resin
DOD-D-1000	Drawings, Engineering and Associated lists
MIL-C-5015	Connectors, Electrical
MIL-C-5541	Chemical Films for Aluminum and Aluminum Alloys
MIL-A-8625	Anodic Coatings, for Aluminum and Aluminum Alloys
MIL-P-15037	Plastic-Material, Laminated, Thermosetting, Sheets, Glass-Cloth, Melamine-Resin
MIL-P-15047	Plastic-Material, Laminated Thermosetting Sheets, Nylon Fabric Base, Phenolic-Resin
MIL-P-17667	Paper, Wrapping, Chemically Neutral
MIL-L-25142	Luminescent Materials; Fluorescent
MIL-C-26861	Cushioning Material, Elestic Type, General

STANDARDS

MILITARY

MIL-STD-129	Marking of Shipments
MIL-STD-130	Identification Markings of U.S. Military Property
DOD-STD-151	Metals; Test Methods
MIL-STD-794	Part and Equipment, Procedures for Packaging and Packing of
MIL-STD-810	Environmental Test Methods and Engineering Guidelines
MIL-STD-1651	Insert Arrangements for MIL-C-5051, MIL-C-22992 (Classes C, J, and R) and MIL-C-83723 (Series II) Electrical Connectors
MS3102	Connector, Receptacle, Electric, Box Mounting, Solder, AN Type

2.1.2 Other Government documents, drawings, and publications. The following other Government documents, drawings, and publications form a part of this specification to the extent specified herein. Unless otherwise specified, the issues shall be those in effect on the date of the solicitation.

DRAWINGS

U.S. Air Force

Downloaded from http://www.everyspec.com

53C12824	Indicator, Course ID-387/ARN, Face Design and Connector Location
53C12825	Wiring Diagram ID-387/ARN, Course Indicator, Schematic

PUBLICATIONS

Air Force-Navy Aeronautical

143	Specifications and Standards, Use of

(Copies of specifications, standards, drawings, publications, and other Government documents required by contractors in connection with specific acquisition functions should be obtained from the contracting activity or as directed by the contracting activity.)

2.2 Other publications. The following document forms a part of this specification to the extent specified herein. Unless otherwise specified, the issues of the documents which are DoD adopted shall be those listed in the issue of the DoDISS specified in the solicitation. Unless otherwise specified, the issues of documents not listed in the DoDISS shall be the issue of the nongovernment documents which is current on the date of the solicitation.

AMERICAN SOCIETY FOR TESTING AND MATERIALS (ASTM)

ASTM B 633	Zink on Iron and Steel, Electrodeposited Coatings of

(Application for copies of ASTM publications should be addressed to the American Society for Testing and Materials, 1916 Race Street, Philadelphia, Pennsylvania 19103.)

2.3 Order of precedence. In the event of a conflict between the text of this specification and the references cited herein, (except for associated detail specifications, specification sheets, or MS standards) the text of this specification shall take precedence. Nothing in this specification, however, shall supersede applicable laws and regulations unless a specific exemption has been obtained.

3. REQUIREMENTS

3.1 Material.

3.1.1 Specifications and standards. Specifications and standards for all materials, parts, and Government certification and approval of processes and equipment, which are not specifically designated herein and which are necessary for the execution of this specification, shall be selected in accordance with Bulletin No. 143, except as provided in the following paragraph.

3.1.1.1 Standard parts. AN, MS, or MIL standard parts shall be used wherever they are suitable for the purpose, and shall be identified by their

Downloaded from http://www.everyspec.com

part numbers. Commercial utility parts such as screws, bolts, nuts, cotter pins, et cetra, may be used, provided they develop suitable properties and are replaceable by the AN, MS, or MIL standard parts without alteration, and provided the corresponding AN, MS, or MIL part numbers are referenced on the drawings and in the parts lists. In applications for which no suitable corresponding AN, MS, or MIL part is in effect on date of invitation for bids, commercial parts may be used provided they conform to all requirements of this specification.

3.1.2 Metals. Metals shall be of the corrosion-resistant type or shall be suitably protected to resist corrosion during normal service life. Materials contained within hermetically sealed inclosures are considered to be suitably protected from corrosion. Requirements specified for fungicidal and corrosion-protective treatment, anodizing of aluminum alloy parts and zink coatings of steel parts are not applicable for parts within hermetically sealed instruments.

3.1.3 Nonmagnetic materials. Nonmagnetic materials shall be used for all parts of the indicator, except where magnetic materials are essential.

3.1.4 Fungus-proof materials. Materials which are not nutrients for fungi shall be used to the greatest extent practicable. In cases where materials that are nutrients for fungi must be used, such materials shall be treated with a fungicidal agent, as approved by the procuring agency.

3.1.5 Protective treatment. When materials are used in the construction of the indicator that are subject to corrosion in salt air or other atmospheric conditions likely to occur during service usage, they shall be protected against such corrosion in a manner that will in no way prevent compliance with the performance requirements of this specification. The use of any protective coating that will crack, chip, or scale with age or extremes of atmospheric conditions shall be avoided.

3.1.6 Plastic materials. Laminated thermosetting plastic materials shall be in accordance with the requirements of L-P-513, MIL-M-14, MIL-P-997, MIL-P-15037, or MIL-P-15047.

3.2 Design. The indicator shall be designed for use with a radio receiving set and shall provide the facilities of a cross pointer indicator, a relative heading indicator, a course selector, an ambiguity indicator, a reference heading signal for the automatic pilot through an approach coupler unit, and a marker beacon indicator. The vertical pointer shall indicate lateral positional deviation from a selected omni-range course or from the "on course" glide slope signal when landing with the aid of an instrument landing system. The relative heading indicator shall show the magnetic heading of an aircraft relative to a selected omni-range course. The course selector "set" knob shall be used to set up an omni-directional range course on the course indicator. The ambiguity indicator shall show whether the aircraft is on a "TO" or "FROM" radial (not aircraft heading). The marker beacon lamp shall provide visual indication of the marker beacon signals. The flag alarms shall provide non-operational indication of the associated electronic equipments.

Downloaded from http://www.everyspec.com

3.3 Construction. The indicator shall be constructed so that no parts shall work loose in service. It shall be built to withstand the strains, jars, vibrations, and other conditions incident to shipping, storage, installation and service use.

3.4 Performance. The indicator shall meet the performance requirement of Section 4.

3.5 Details of components.

3.5.1 Indicator case. The course indicator case shall conform to Drawing 53C12824. The case whall provide a hermetically sealed enclosure for the internal mechanism of the indicator. The design of the indicator shall be such that the internal mechanism may be removed from the case, replaced, and the case resealed. This shall be accomplished without the use of special tools and fixtures, unless otherwise approved by the procuring agency. The hermetic seal shall be so accomplished that the seal wil not be dependent upon materials which will be affected by the action of any atmospheric condition to which the indicator may be submitted.

3.5.1.1 Case construction. The case shall be constructed of a suitable material applicable to hermetic sealing and the material shall be uniform in texture with a smooth external surface.

3.5.1.2 Case gas mixture. The case shall be filled with a mixture of nitrogen and helium in the approximate proportion of 90% nitrogen and 10% helium, by volume. The absolute pressure of the nitrogen-helium mixture in the case shall be approximately 1 atmosphere. The purity of nitrogen shall be at least 99.5%, and water vapor content shall not exceed 0.02 milligrams per liter (9 grains per 1000 cubic feet) at the filling pressure. The purity of helium shall be at least 98%, and water vapor content shall not exceed 0.006 milligrams per liter at the filling pressure.

3.5.1.3 Bezel ring. The bezel ring shall be made of nonferrous low density metal and shall have a durable dull black finish. The ring shall be held in place by means of screws properly secured by lock washers or similar devices of approved design.

3.5.2 Cover glass. The cover glass shall be suitable for hermetic sealing and shall be clear, flat, and free from flaws which interfere with normal reading of the indicator.

3.5.3 Face design. The face design shall be in accordance with Drawing 53C12824.

3.5.3.1 Fixed heading scale. The construction and marking of the fixed heading scale shall conform to Drawing 53C12824. The background of the dial shall be finished in durable dull black. The scale shall be calibrated from 0° to 45° in 5° graduations each side of the north position on the dial, and each side of the south position of the dial. The 45° points shall be

Downloaded from http://www.everyspec.com

labeled "45". North, south and 45° positions shall be indicated by triangular index marks. The length of the 5° graduations shall be approximately 1/16 inch and the length of the 10° graduations shall be approximately 1/8 inch. The width of the 5° graduations shall be approximately 0.015 inch and the width of the 10° graduations shall be approximately 0.020 inch. The height of the numerals shall be 0.090 inch. The triangle index marks at the north and south positions shall be approximately 1/16 inch wide and 7/64 inch long. Curvature of the fixed heading scale shall be held to an absolute minimum to eliminate parallax as much as possible. The triangle marks at the 45° points shall be the same as those at the north and south position.

3.5.4 Course selector. The course selector shall consist of a manually rotatable 360° scale synchronized with a 30 cycle synchro resolver with a tow-phase rotor, the synchro of the relative heading indicator and the synchro control transformer. The course selector scale shall be direct reading in increments of one degree. Setting of the bearing scale shall be such that zero or north shall correspond to the zero or north indication from a slaved gyro magnetic compass. There shall be a clockwise rotation of the resolver rotor for corresponding increases in course selector settings. The setting knob mechanism shall so operate that a clockwise rotation of the knob produces an increasing course setting. The mechanism shall be continuously rotatable. The gear ratio (setting knob to bearing scale) shall be approximately 16:1. Height of course selector numerals shall be at least 3/16 inch.

3.5.4.1 Resolver. The resolver shall consist of a 30 cycle synchro resolver with a two-phase rotor and two-phase stator. For each phase of the resolver, the stator impedance shall be 169 plus J79 ohms and the rotor impedance shall be 400 plus J125 ohms with a nominal tolerance of plus or minus 10% when energized from a 30 Hz power source.

3.5.4.1.1 Resolver rotor output voltage. Each rotor output voltage shall be 180 millivolts, plus or minus 10%, under the following coexistent conditions:

a. Both resolver stator phases are energized by a two-phase, 30 Hz power source.

b. When there is a 90° phase angle between the current through the two resolver stator phases.

c. The voltage across the 1000 ohm, plus or minus 1 ohm, noninductive resistor (A to B, figure 1) which is in series, with stator phase-1 is 2.07 volts, plus or minus 2%, and is equal to the voltage across the 1000 ohms, plus or minus 1 ohm, noninductive resistor (C to D, figure 1) which is in series with stator phase-2.

Downloaded from http://www.everyspec.com

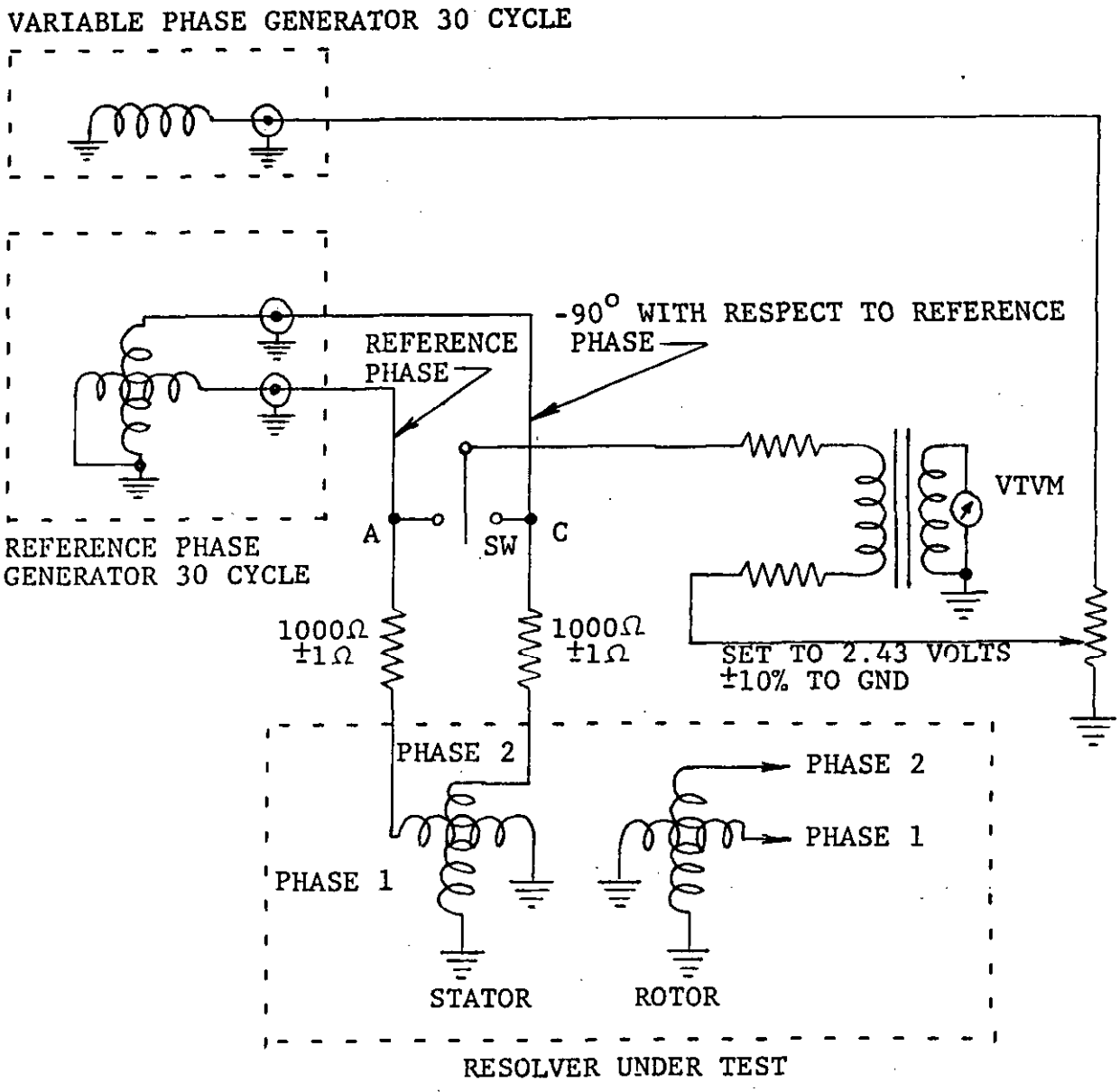

Figure 1

Downloaded from http://www.everyspec.com

3.5.4.1.2 Electrical zero.

3.5.4.1.2.1 Phase-1. With sufficient 30 Hz voltage applied across each of the 2 stator phases and their respective 1000 ohm, plus or minus 1 ohm, noninductive series resistors to give a voltage drop of 2.07 volts, plus or minus 10%, across each of the resistors (measured between points A, B, C, and D of figure 1), the output voltage of phase-1 of the rotor (at connection pin S) shall lead the voltage across the 1000 ohm resistor in series with phase-1 of the stator (point A, figure 1) by 86.2°, plus or minus .05° when:

a. The indicator course selector is set at exactly 300°.

b. The voltage across the 1000 ohm resistor which is in series with phase-1 stator (point A, figure 1) leads the voltage across the 1000 ohm resistor which is in series with phase-2 stator (point B, figure 1) by exactly 90°.

3.5.4.1.2.2 Phase-2. With sufficient 30 Hz voltage applied across each of the 2 stator phased and their respective 1000 ohm, plus or minus 1 ohm, noninductive series resistor to give a voltage drop of 2.07 volts, plus or minus 10%, across each of the resistors (measured between points A, B, C, and D of figure 1), the output voltage of phase-2 of the rotor (at connector pin Z) shall lead the voltage across the 1000 ohm resistor in series with phase-1 of the stator (point A, figure 1) by 86.2°, plus or minus 0.5° when:

a. The indicator course selector is set at exactly 30°.

b. The voltage across the 1000 ohm resistor which is in series with phase-1 stator (point A, figure 1) leads the voltage across the 1000 ohm resistor which is in series with phase-2 stator (point B, figure 1) by exactly 90°.

3.5.4.2 Relative heading indicator. The relative heading indicator shall consist of a pointer and a fixed scale. The heading pointer shall be pivoted in the center of the fixed scale and operated by means of a synchro unit directly coupled to the pointer by a shaft extending through the fixed scale. The heading pointer shall be positioned behind the vertical and horizontal indicating pointers. Phasing of the heading indicator mechanism shall be such that the heading pointer shall point to the zero or 12 o'clock position on the dial, when the course selector is set at 000, and this shall be the high null position of the heading synchro. An increase in the mechanical course setting shall cause a corresponding counterclockwise movement of the synchro stator when viewed from the front of the course indicator.

3.5.4.2.1 Mechanical damping. The relative heading synchro unit shall be mechanically damped. Damping provisions shall be such that there will be no spinning of the heading pointer and oscillation, if present, shall damp out in less than 3 seconds.

Downloaded from http://www.everyspec.com

3.5.4.2.2 Heading synchro unit. The self-synchronous motor used for obtaining remote indication of heading shall consist of a salient two-pole, single-phase rotor which shall be rotatable in a Y-connected, three-phase stator, 26 to 35 volts, 400 Hz, plus or minus 5%, single phase, alternating current, shall furnish the rotor (primary) excitation.

3.5.4.2.3 Heading synchro electrical characteristics. The heading synchro shall operate with the following electrical characteristics and with normal excitation of 26 volts, 400 Hz, single-phase, alternating current, applied to the primary (rotor) of the synchro unit.

3.5.4.2.3.1 Primary current. The current drawn by the synchro shall not exceed 120 milliamperes with secondaries open circuited.

3.5.4.2.3.2 Power input. The power consumption of each synchro unit shall not exceed 0.60 watt.

3.5.4.2.3.3 Secondary voltage. The maximum open circuit voltage measured between any two secondary leads shall be 11.8 volts, plus or minus 0.3 volts. The variation between the three maximum secondary voltages on any one motor shall not exceed 0.2 volts.

3.5.4.2.4 Heading synchro brush contact resistance. Brush contact resistance shall not exceed one ohm up to 60 revolutions per minute after 15 seconds with 50 milliamperes current.

3.5.4.2.5 Follow-up overswing. The synchro unit shall be capable of following a rotation input varying at a rate of 12° per second with not more than 1° overswing when the input suddenly comes to rest.

3.5.4.3 Heading datum synchro. The heading datum synchro shall be a control transformer type synchro. The stator shall be mounted in a fixed position. The rotor shaft shall be coupled mechanically to, or synchronized with, the resolver rotor shaft with a ratio of 1:1.

3.5.4.3.1 Heading datum synchro electrical characteristics. The heading datum synchro shall employ a cylindrical, single-phase rotor which shall be capable of rotation in a Y-connected, three-phase stator. Normal operating voltage shall be 26 volts, plus or minus 0.5 volts, 400 Hz, plus or minus 5 Hz, single-phase, alternating current. The direct current resistance between any two of the three stator leads of the synchro shall be 45 ohms, plus or minus 12%, and the direct current resistance of the synchro rotor winding shall be 170 ohms, plus or minus 12%.

3.5.4.3.1.1 Primary current. The maximum rotor winding current shall be 44 milliamperes root mean square (RMS), plus or minus 15%.

3.5.4.3.1.2 Power input. The maximum power input to the rotor winding shall be 0.45 watt, plus or minus 0.05 watt.

Downloaded from http://www.everyspec.com

3.5.4.3.1.3 Secondary voltage. The maximum open circuit voltage between any two of the three stator leads shall be 11.8 volts, RMS, plus or minus 0.3 volt. The variation between the three maximum secondary voltages on any one synchro shall not exceed 0.2 volt.

3.5.4.3.2 Heading datum synchro brush contact resistance. The brush contact resistance of the synchro shall not exceed 0.5 ohm when measured at a rotor speed of 300 revolution per minute maximum.

3.5.5 Ambiguity indicator. The ambiguity indicator shall consist of a flag or semaphore, labeled "TO" and "FROM", coupled to a meter movement having a direct current response of 250-0-250 microamperes. When the ambiguity indicator movement is energized with a current of 250 microamperes, plus 0, minus 100, and when the polarity at Pin J is positive with respect to Pin K, the word "TO" shall appear in the indicator face window or opening. When the ambiguity indicator movement is energized with a current of 250 microamperes, plus 0, minus 100, and when the polarity at Pin K with respect to Pin J is positive, the word "FROM" shall appear in the indicator face mask window or opening. The letters for the markings shall be capitals and arranged as shown on Drawing 53C12824. The letters of the word "TO" shall be at least 0.094 inches in height and the letters of the word "FROM" shall be at least 0.076 inches in height. The resistance of the Pins J and K shall be 150 plus or minus 50 ohms.

3.5.6 Pointers. With the indicator in the normal operating position, the vertical (localizer) and horizontal (glideslope) pointers shall be pivoted in such a manner that they are vertical and horizontal respectively at zero center or at any point of deflection of the pointers shall be in agreement with the polarity of direct current received from the corresponding localizer, glideslope, or navigation receivers, and shall be in agreement with the pilarity and direction of deflection in accordance with Drawing 53C12825. The vertical pointer shall be positioned behind the horizontal pointer when facing the front of the indicator. Each pointer mechanism shall be provided with an external zero adjustment. The free end of the horizontal (glideslope) pointer shall not be visible from directly in front of the course indicator regardless of the position of the pointer. The free end of the vertical (localizer) pointer, when the pointer is in the zero or "on course" position, shall fall between the course selector numeral wheel and the tip of the heading pointer when the heading pointer is in the zero position pointing toward the course selector numeral wheel.

3.5.6.1 Resistance. The vertical and horizontal pointer mechanisms shall have a resistance of 1000 ohms plus or minus 3% at 25°C (77°F) when measured across terminals A and B and across terminals C and D, respectively, at the receptacle.

3.5.6.2 Response time. The response time of each pointer mechanism shall be a minimum of 1.15 seconds. Response time is defined as the time required for the pointer to reach 90% of its final indication, and time is counted from

Downloaded from http://www.everyspec.com

the instant of application of the current. The pointer shall be considered as having come to apparent rest when it has reached within plus or minus 1% of the scale length of the actual rest point.

3.5.6.3 Deflection. The vertical and horizontal pointer deflection shall be linear in degrees with respect to current within 7.5 % of the proportionate full scale value. A deflection of 5/8 inch measured from the center of the dial to the pointers along a horizontal or vertical line respectively, shall require 150 microamperes, plus or minus 5%, with the indicator in a normal upright position.

3.5.7 Flag alarms. The flag alarms shall be operated by a suppressed zero type of mechanism which shall hold the flag against a stop in its visible position in the absence of current, or when the current application is below a predetermined value as specified below. Flag alarm positioning shall be in accordance with Drawing 53C12824, and polarity in accordance with Drawing 53C12825.

3.5.7.1 Flag alarm resistance. The localizer and glideslope flag alarm mechanisms shall have a resistance of 1000 ohms, plus or minus 3% at 25°C (77°F) when measured across Terminals E and F and across Terminals G and H, respectively at the receptacle.

3.5.7.2 Alarm flag visibility. Each alarm flag shall remain visible with the application of any current less than 180 microamperes. At any value of current greater than 180 microamperes the alarm flag shall leave its visible position stop, and shall disappear behind the face mask with the application of a current of 245 microamperes, plus or minus 10 microamperes.

3.5.8 Receptacles. All indicator circuits shall be connected to a 26 pin hermetically sealed receptacle, except the three stator leads from the control transformer synchro which shall be connected to a 3 pin hermetically sealed receptacle. Location of connectors shall be in accordance with Drawing 53C12824. Electrical connections shall be made as shown on Drawing 53C12825.

3.5.8.1 26-pin receptacle. The shell size, pin size, and pin arrangement of the 26-pin receptacle similar to receptacle MS3102C-28-12P, shall be in accordance with MIL-STD-1651 and may have the pin spacing dimension tolerances as large as plus or minus 0.006 inch instead of plus or minus 0.002 inch.

3.5.8.2 3-pin receptacle. The shell size, pin size, and pin arrangement of the 3-pin receptacle similar to receptacle MS3102C-10SL-3p, shall be in accordance with MIL-STD-1651 and may have the pin spacing dimension tolerances as large as plus or minus 0.006 inch instead of plus or minus 0.002 inch.

3.5.8.3 High potential. The high potential performance shall be in accordance with MIL-C-5015 for "INST" service.

3.5.8.4 Sealed. The receptacle shall be of the sealed type. The assembly of the contacts, inserts, and shell shall be accomplished in such a manner as to prevent the leakage of air or pressurizing gas, containing not less than 10%

Downloaded from http://www.everyspec.com

helium by volume, in excess of 1 micron cubic foot per hour at a pressure differential of approximately 1 atmosphere.

3.5.8.5 Humidity. The receptacle shall meet the humidity requirements of MIL-C-5015 for "INST" service.

3.5.8.6 Corrosion. The receptacle shall meet the requirements of MIL-C-5015 for protection against corrosion.

3.5.8.7 Insulation resistance. The insulation resistance shall be in accordance with MIL-C-5015.

3.5.8.8 Certificate of approval. Manufacturer's certification of compliance with the connector requirements may be furnished to the Contracting Officer in lieu of Government Laboratory tests.

3.5.9 Wiring Connections of components to receptacle pins shall be in accordance with Drawing 53C12825.

3.5.10 Mounting. The indicator shall be designed for front mounting. It shall withstand loads up to 150 pounds, 67.95 Kg, when attached to a suitable panel with screws through the mounting holes.

3.5.11 Parallax. The heading pointer shall be placed next to the scale. The outside horizontal pointer shall be not farther than 1/4 inch from the scale. This distance shall be held to a practical minimum in order to reduce parallax. The distance between the front surface of the dial and the inner surface of the glass shall not exceed 3/8 inch when measured from the center of the dial.

3.5.12 Overload. When the direct current movements are subjected to constant or intermittent overloads up to four times full scale current, associated pointers shall not stick or break and there shall be no depreciation in performance.

3.5.13 Interference. Rapidly energizing the marker lamp shall not produce any noticeable effect on any of the pointers.

3.5.14 Shielding. The course indicator shall be magnetically and electrically shielded. When held in any position such that the nearest portion of the course indicator is a distance of 8 inches from the pivot of the card of an aircraft magnetic compass in a horizontal magnetic field having a strength of 0.12 gauss the course indicator shall not cause a change in reading of the compass card to exceed 4°.

3.5.15 Interchangeability. All parts having the same manufacturer's part number shall be directly and completely interchangeable with each other with respect to installation and performance. Changes in manufacturer's part numbers shall be governed by the drawing number requirements of MIL-D-5028.

3.5.16 Dimensions. The outside diameter of the course indicator case

Downloaded from http://www.everyspec.com

shall be 3-1/8 inches plus 0.000, minus 1/8 inch. The length of each course indicator shall not exceed 8 inches over-all including setting knob and receptacle.

3.5.17 Weight. The weight of the complete course indicator shall not exceed 3-3/4 pounds (1.7 Kg).

3.6 Dial markings.

3.6.1 Fluorescent-luminescent material. Dial marking including numerals and graduations, cross-pointers, tip of heading pointer, "TO" and "FROM", dial dots and center circle, shall be finished in fluorescent-luminescent material in accordance with MIL-L-25142. The red background of the alarm flags shall be finished in fluorescent-luminescent material (color No. 66). Exceptions are specified below.

3.6.2 Matte green material. The markings on the course indicator front mask shall be finished in non-luminescent matte green material, Munsell color G-6/6.

3.6.3 Durable dull black. The background of the dials, heading pointer (except tip and center circle), alarm flag lettering, indicator case and all other markings not otherwise specified, shall be finished in durable dull black.

3.7 Finishes and protective coatings.

3.7.1 Aluminum alloy parts. Aluminum alloy parts shall be covered with an anodic film conforming to MIL-A-8625 except as follows:

a. Dials, small holes, and case inserts need not be anodized.

b. Aluminum alloys which do not anodize satisfactorily shall be coated with a chemical film in accordance with the MIL-C-5541.

c. Where the primary purpose of the treatment is to afford a suitable paint base, chemical treatments in accordance with MIL-C-5541 may be used in lieu of anodizing.

d. Castings containing nonaluminum alloy integral insets may be treated with a chemical film in accordance with MIL-C-5541 in lieu of anodizing.

e. When abrasion resistance is a factor, chemical films in accordance with MIL-C-5541 shall not be used in lieu of anodizing.

3.7.2 Zinc plating. Standard parts, zinc plated in accordance with QQ-Z-325 and supplied only with type I zinc plating shall not be used unless given the type II treatment (or type III, if painted) before assembly into equipment, or unless used within pressurized or sealed space not exposed to the deteriorating effects of moist air.

Downloaded from http://www.everyspec.com

3.8 Marking.

3.8.1 Identification of product. Indicators, sub-assemblies and parts shall be marked for identification in accordance with MIL-STD-130. The nameplate shall be securely fastened to the rear of the indicator.

3.8.2 Notice. A notice shall be permanently placed on the back or barrel of each indicator, warning that the indicator is hermetically sealed.

3.9 Workmanship.

3.9.1 General. The indicator, including all parts and accessories, shall be constructed and finished in a thoroughly workmanlike manner. Particular attention shall be given to neatness and thoroughness of soldering, wiring, impregnation of coils, marking of parts and assemblies, welding and brazing, painting, riveting, machine-screw assemblies, and freedom of parts from burrs and sharp edges.

3.9.2 Dimensions. Dimensions and tolerances not specified, shall be as close as is consistent with best shop practices. Where dimensions and tolerances may affect the interchangeability, operation, or performance of the indicator, they shall be held or limited accordingly.

3.9.3 Screw assemblies. Assembly screws and bolts shall be tight. The word "tight" means that the screw or bolt cannot be appreciably tightened further, without damage or injury to the screw, bolt or threads.

3.9.4 Riveting. Riveting operations shall be carefully performed to insure that the rivets are tight and satisfactorily headed.

3.9.5 Gears. Gear assemblies shall be properly aligned and meshed, and shall be operable without interference, tight spots, loose spots, or other irregularities. Where required for accurate adjustments, gear assemblies shall be free from backlash.

3.9.6 Cleaning. The indicator shall be thoroughly cleaned of loose, spattered, or excess solder, metal chips, and other foreign material, after final assembly. Burrs and sharp edges, as well as resin flash that may crumble, shall be removed.

3.10 Government loaned property. When provided for in the contract or purchase order, the following item will be furnished by the Government on loan to the contractor upon his request:

Item	Nomenclature	Quantity
1	Indicator, Course ID-387/ARN	1

Downloaded from http://www.everyspec.com

4. SAMPLING, INSPECTION, AND TEST PROCEDURES

4.1 Classification of tests. The inspection and testing of the course indicator shall be classified as follows:

4.1.1 Preproduction tests. Preproduction tests are those tests accomplished on samples which are representative of the production of the item after the award of contract, to determine that the design of the production item meets the requirements of this specification.

4.1.2 Inspection tests. Inspection tests are those tests accomplished on course indicators manufactured and submitted for acceptance under contract.

4.2 Test conditions.

4.2.1 Standard atmospheric conditions. Whenever the pressure and temperature existing at the time of test are not specified definitely, it is understood that the test is to be made at atmospheric pressure (approximately 29.92 inches Hg) and at room temperature (approximately plus 25°C). When tests are made with atmospheric pressure or room temperature differing materially from the above values, proper allowance shall be made for the difference from the specified condition.

4.2.2 Attitude and vibration. Individual tests shall be made at normal ambient conditions and nominal voltages unless otherwise specified in the test. The course indicator shall be tested in an upright and normal position. The use of light agitation, not to exceed 0.002 inch vibration at a frequency of 40 to 55 Hz, is permissible.

4.2.3 Standard test transmitter. The standard test transmitter shall be an Eclipse-Pioneer Type AY-201-1 or equal high precision transmitting synchro with an accuracy of plus or minus 0.1°. A means of reading the angular position of the rotor with respect to the electrical zero of the synchro shall be provided which shall be settable, rotatable and readable from 0 to 360° in increments of 0.1°. The synchro rotor shall be rotatable continuously clockwise and counterclockwise. The following procedure shall be used to calibrate the test transmitter:

a. The leads of the rotor shall be designated "HOT" or "H" and "COLD" or "C" at will.

b. One of the stator leads shall be selected at will, labeled "Z" and coupled to the "COLD" rotor lead.

c. A voltage of 26-28 volts at a frequency of 400 Hz, plus or minus 5 Hz shall be applied between the "HOT" lead, and the "COLD" and "Z" leads coupled together to ground. The rotor or stator shall be rotated until the output of the remaining stator leads is at a "null" or minimum voltage as read on a vacuum tube voltmeter.

d. The voltage between the "HOT" lead and the remaining stator leads

Downloaded from http://www.everyspec.com

coupled together shall be measured. If this voltage is less than the excitation voltage of the rotor, the synchro is at "low null" or the 180° position with respect to the stator. If the voltage is greater than the rotor excitation voltage, the synchro rotor is at "high null" or the zero-degree index reference position.

e. The rotor shall be placed at the "high null" position. A voltmeter shall be connected between one of the remaining stator leads and ground with the second lead open. When the synchro rotor is turned clockwise from the "high null" position, the voltage will increase before decreasing if the "X" stator lead is connected. The voltage will decrease before increasing if the "Y" stator is connected. All of the leads of the synchro shall be labeled in accordance with the results of the above tests.

4.3 Preproduction tests.

4.3.1 Sampling Instructions. Five course indicators as specified in the contract will be tested for design approval by the procuring service, or when so specified in the contract, at the contractor's plant under the supervision of the Government Inspector.

4.3.2 Tests. The preproduction tests shall consist of the following tests and those specified under the inspection tests, subject to the test conditions specified herein.

4.3.2.1 Life test. The course indicator shall withstand a mechanical life test of 5,000 cycles as follows:

a. The setting knob mechanism shall be rotated continuously starting with a zero setting on the course indicator. A 360° rotation of the course indicator shall constitute one cycle. Rotation shall alternate every 100 cycles. The elapsed time for one cycle shall be 24 seconds, plus or minus 2 seconds.

b. After every 500 cycles of operation, the course indicator shall be examined superficially to determine whether there has been a breakdown of component parts. After cycling has been completed, the indicator shall meet the detailed requirements for scale error. There shall be no sticking of component parts, and the course indicator shall have suffered no deleterious effects as a result of this test. There shall be no excessive wearing of component parts as evidenced by the presence of loose particles of metal in the course indicator case.

4.4 Inspection tests.

4.4.1 Individual tests. Each course indicator shall be subjected to the following tests.

4.4.1.1 Examination of product. The indicator shall be visually inspected

Downloaded from http://www.everyspec.com

to determine conformance with this specification with respect to nameplates, workmanship, finish and cleanliness.

4.4.1.2 Mechanical. Every part produced under this specification shall be subjected to such test as the procuring service deems necessary to determine compliance with material, workmanship, and mechanical detail requirements of this specification. Such tests or inspection may be made on component parts, sub-assemblies, partial assemblies, or on the completed course indicator.

4.4.1.3 Dielectric strength. Course indicators shall be capable of withstanding without damage, a potential of 200 volts RMS, 60 Hz alternating current between any connector pin, and case, for a period of 5 seconds minimum.

4.4.1.4 Resolver accuracy. The course selector error (resolver error plus backlash) with reference to theoretical electrical zero (as specified in 3.5.4.1.2) shall not exceed plus or minus 0.5°. This accuracy shall be maintained with phase-one of the rotor connected in the test circuit. In order to determine this accuracy, the course selector scale shall be set at 300° and the variable phase generator rotated manually until a null is obtained on the vacuum tube voltmeter. The generator dial reading shall be recorded. The course selector scale shall be rotated to settings of 345°, 30°, 75°, 120°, 165°, 210°, and 255°, and the variable phase generator rotated for each of these settings until a null indication on the vacuum tube voltmeter is obtained for each of the course selector scale settings. The generator dial reading at each check point shall be recorded. In order to determine mechanical backlash in the course selector, one set of readings shall be obtained by rotating the course selector set knob clockwise to each scale setting, and a second set by rotating the set knob counterclockwise to each scale setting.

$$E = A - (B + C)$$

Where E = Course selector error

A = Generator dial reading at a check point

B = Generator dial reading at the electrical zero reference point (exactly 82°) (300° plus or minus 0.5° setting on the course selector)

C = Increment in the course selector setting from 300°, (such as 45°, 90°, 135° from the reference)

The larger of the two errors read at each check point shall constitute the course selector error at the point. The maximum error at any one check point, with reference to theoretical electrical zero, shall not exceed 0.5°.

4.4.1.5 Relative heading synchros and electrical zero and rotation test. The standard synchro test transmitter shall be connected to the course indicator as follows:

Downloaded from http://www.everyspec.com

Test Transmitter	Relative Heading Indicator (Course indicator 26 pin connector)
"HOT"	U
"COLD"	T
"X"	V
"Y"	W
"Z"	T

a. Connect the standard synchro transmitter to the course indicator relative heading indicator in accordance with the above table.

b. Apply a voltage of 26 volts plus 2, minus 0 volts, 400 Hz plus or minus 5 Hz to the "HOT" and "COLD" leads of the test transmitter.

c. Set the standard synchro transmitter rotor to its zero index reference (high null).

d. Set the course indicator course selector to zero. Under the coexistent conditions set forth in a, b, c, and d above, the following shall occur:

(1) The course indicator relative heading indicator position shall point to the zero or North index reference on the course indicator fixed scale.

(2) As the test transmitter rotor is rotated clockwise from its zero index position and its dial reading in degrees increases from zero, the following conditions shall exist:

(a) The course indicator relative heading indicator pointer shall rotate clockwise with respect to its fixed scale from its zero index reference.

(b) The voltage between pins "X" and "Z" shall increase before decreasing.

(c) The voltage between pins "Y" and "Z" shall decrease before increasing.

4.4.1.5.1 Scale and index error. The course selector shall be set to 000. The heading pointer shall be driven from the standard synchro transmitter to read precisely 45, 135, 180, 225, 315, and 0 degrees on the indicator heading scale. At each successive reading, the scale of the standard transmitter shall be read and recorded. The difference between the indicator heading reading and the corresponding heading reading of the standard synchro transmitter at each check-point shall be determined. These differences shall be added algebraically and the algebraic sum divided by the number of readings. The result shall be the index error and shall not exceed plus or minus 0.5°. The error between the indicator setting and the standard synchro transmitter setting read at any one check-point shall constitute scale error.

Downloaded from http://www.everyspec.com

Any one reading shall not differ from the correct heading plus the index error by more than plus or minus 1.25°. The indicator may be tapped before reading.

4.4.1.5.2 Friction error. Friction error shall be determined by the change in readings before and after tapping and shall not exceed 1°.

4.4.1.5.3 Spin test. With the heading pointer displaced 175°, minus 0°, plus 4° from the locked standard synchro transmitter setting, rotors shall be instantaneously energized with 26 volts, 400 Hz. There shall be no motoring of the relative heading synchro heading pointer and oscillation, if present, shall damp out in less than three seconds.

4.4.1.5.4 Position Error. The standard transmitter shall be set at the index reference position and locked. The reading of the indicator taken while the indicator is in a normal upright position shall not differ from the reading while the indicator is held in any other position, by more than 0.25°.

4.4.1.6 Heading datum synchro index reference. The index reference (high null) for heading datum synchro shall occur with course selector set at 270° and shall be determined as follows:

Test transmitter		Heading datum synchro
"HOT"		"X"
"COLD"		"Y"
"X"	Yellow B	
"Y"	Blue C	3-pin connector on course indicator
"Z"	Black A	

a. Connect the test transmitter to the course indicator heading datum synchro in accordance with the above table.

b. Connect course indicator pins "X" and "Y" on the 26-pin connector to a vacuum tube voltmeter.

c. Apply a voltage of 26 volts, plus or minus 0.5 volts at 400 Hz plus or minus 5 Hz, to the "HOT" and "COLD" test transmitter leads.

d. Set the test transmitter rotor to its zero index reference (high null).

e. Set the course indicator course selector to zero. Under the coexistent conditions set forth in a, b, c, d, and e above, the following shall occur:

(1) The heading datum synchro rotor shall be at a voltage null with respect to its stator as indicated by the vacuum tube voltmeter

Downloaded from http://www.everyspec.com

within plus or minus 0.5° of the course selector setting.

(2) As the test transmitter rotor is rotated clockwise from its zero index position and its dial reading in degrees increases, from zero, the following situation shall exist:

(a) The voltage between pins "X" and "Z" shall increase before decreasing and the voltage between pins "Y" and "Z" shall decrease before increasing.

4.4.1.6.1 Accuracy. The accuracy of the course selector heading datum synchro (control transformer) system with respect to a standard synchro transmitter shall be plus or minus 0.5°. The accuracy of the heading datum synchro shall be determined as follows:

a. The three stator winding leads of the heading datum synchro shall be connected electrically to the three corresponding stator windings of the standard synchro.

b. The rotor winding leads of the heading datum synchro shall be connected to a vacuum tube voltmeter.

c. The rotor winding of the standard synchro shall be energized by the application of 26 volts, RMS, 400 Hz.

d. Starting with zero scale setting, the course indicator course selector mechanism to which the heading datum synchro rotor is mechanically connected, shall be rotated progressively clockwise in increments of 30° to the 360° setting. The rotor of the standard synchro transmitter shall be rotated /manually about the setting corresponding to the course selector setting until a voltage null is indicated on the vacuum tube voltmeter. The null indication should occur within plus or minus 0.5° of the check-point as indicated by the pointer against the fixed scale on the standard synchro transmitter. The difference between the indicated angular displacement of the rotor on the standard synchro unit at the null point and the setting of the course indicator course selector shall constitute the error. This error shall not exceed plus or minus 0.5°.

e. In order to take into account gear-train backlash, the procedure described in d. above shall be repeated except that the course selector mechanism and the rotor of the standard synchro transmitter shall be rotated counterclockwise starting at the 360° setting and shall be rotated progressively to the 0° setting.

4.4.1.7 Position Error. With the indicator in a normal upright position and the pointer mechanisms de-energized, the vertical and horizontal pointers shall each be adjusted by means of the zero correctors to bisect the center of the indicator dial. The pointers shall not deflect beyond 7/64 inch from the center as the course indicator is rotated from the normal upright position 30° clockwise, 30° counterclockwise and is tilted 30° towards the face-up position.

Downloaded from http://www.everyspec.com

4.4.1.7.1. Response time. The response time of the vertical and horizontal pointers shall be measured and shall be in accordance with the detail requirements in 3.5.6.2. For this test the instrument shall be shunted externally with a resistance of 350 ohms, to allow for the shunting effect of another indicator in parallel with the usual source. The voltage source shall be steady and shall be applied to the above circuit through at least 100,000 ohms. At least 5 seconds shall be allowed in this test in order to establish the calibration of the 100% mark.

4.4.1.8 Flag alarms. Flag alarms shall be tested to determine compliance with the requirements of 3.5.7.1 and 3.5.7.2.

4.4.1.9 Pressure leak. Leakage shall be determined by means of a helium leak detector, differential (1 atmosphere) from outside to inside the case. Any leakage in excess of 1 micron cubic foot per hour shall be cause for rejection.

4.4.1.10 Anti-fog test. The indicator shall be properly connected with power applied, and placed in a 71°C, plus or minus 2° controlled ambient temperature for a period of one (1) hour. At the end of this period, with the temperature maintained at 71°C, an ice cube shall be rubbed on the indicator cover glass for a period of one to two minutes. The indicator cover shall then be wiped dry (compressed air drying is not permitted) and the indicator inspected. Evidence of water, fog or oil fog on the cover glass, bars, flags, digital course readout, or face plate shall be cause for rejection.

4.4.2 Sampling tests.

4.4.2.1 Number of samples. Course indicators shall be selected at random from the quantity produced each month and subjected to the sampling tests. The number of course indicators to be subjected to the sampling tests shall be in accordance with the following:

Quantity of course indicators produced during one month	Number of samples to be tested during one month
0 through 99	2
100 through 399	3
400 through 799	4
800 and above	5

4.4.2.2 Vibration.

4.4.2.2.1 Vibration error. The indicator shall be subjected to vibration in accordance with Procedure IV of MIL-STD-810 at an amplitude of 0.018 to 0.020 inches diameter. The maximum total amplitude of heading pointer oscillations throughout the frequency range shall not exceed 1/32 inch.

Downloaded from http://www.everyspec.com

4.4.2.2.2 Vibration failure. The indicator shall be subjected to vibration in accordance with Procedure V of MIL-STD-810. Following the vibration period, the indicator shall be checked for scale error and friction as specified herein. The scale error and friction shall not exceed room temperature tolerance. No screws or other parts shall become loosened or damaged as a result of the vibration.

4.4.2.3 Thermal Shock. The indicator shall be subjected to eight cycles of exposure to water at 85°C, plus or minus 2° (185°, plus or minus 3.6°F) without evidence of water penetration or damage to coating or enclosure. Each cycle of the test shall consist of immersing the indicator in water at 85°C for a period of 30 minutes, and then within 5 seconds of removal from the bath, the indicator shall be immersed for a period of 30 minutes in the other water bath maintained at a temperature of 5°C. This cycle shall be repeated continuously, one cycle following the other until eight cycles have been completed. Following this test and upon return to room temperature, the counter mechanism shall be continuously rotatable in a clockwise and counterclockwise direction. The pointers, flags, and ambiguity indicators shall be made to operate and there shall be no evidence of sticking.

4.4.2.4 Scale error and friction at low temperature. The course indicator shall be placed in a temperature chamber and subjected to a temperature of -55°C, plus or minus 3° (-67°, plus or minus 5.4°F) for a period of 3 hours. While at this temperature, and at the end of the 3 hours exposure, scale and friction error of the relative bearing indicator shall be not more than 3°.

4.4.2.5 Scale error at high temperature. The test specified for scale error at low temperature shall be repeated, except that the course indicator shall be held at a temperature of 70°C, plus or minus 3° (plus 158° plus or minus 5.4°F) for 3 hours. Scale error, not including the index error, shall be not more than 1.25°.

4.4.2.6 High altitude (low temperature). The course indicator shall be subjected to a pressure equivalent to 50,000 feet, plus or minus 500 feet, at a temperature of -55°C, plus or minus 3° (-67°, plus or minus 5.4°F) for a continuous period of 4 hours. While at this pressure and temperature, there shall be no sticking of movable component parts. Pointers, flags and the ambiguity indicator shall move throughout their range of travel without sticking. The counter mechanism shall be continuously rotatable in a clockwise and counterclockwise direction.

4.4.2.7 High temperature exposure. The course indicator shall be subjected to a temperature of 70°C (158°F) for a period of 24 hours. After the course indicator has returned to room temperature, it shall be subjected to a scale error test as specified herein. There shall be no sticking of pointers or other movable component parts. Following this test the vertical and horizontal pointers shall not have deviated from the zero setting made prior to the test, beyond the outside diameter of the center circle, with the course

Downloaded from http://www.everyspec.com

indicator in a normal upright position. The vertical and horizontal pointers shall be reset to the zero position and sensitivity measurements made on the vertical and horizontal pointer and flag mechanisms. The sensitivity shall be within the limits set forth in paragraph 3.5.6.3, except the tolerance on the vertical and horizontal pointers mechanisms shall be plus or minus 8%, and each flag alarm shall leave its visible position stop with the application of a current of 180 microamperes or more and shall disappear behind the face mask with the application of a current of 245 microamperes, plus or minus 15 microamperes.

4.4.2.8 Salt spray. The indicator shall be subjected to a salt spray test in accordance with QQ-M-151 for a period of 50 hours. The indicator shall be examined, and there shall be no evidence of external corrosion or deterioration which will affect subsequent operation. The indicator shall be subjected to the test specified for dielectric strength, 4.4.1.4, and the measured resistance shall be a minumum of 20 megohms between each pin of the electrical receptacle and the shell, or any metal part of the indicator case. The external surface of the indicator may be washed with distilled water and air-dried prior to subjection to dielectric strength test.

4.4.2.9 Hermetic seal. The indicator shall then be subjected to the pressure leak test 4.4.1.9 and meet the requirements therein.

4.4.3 Rejection and retest. When tests are specified on a quantity of course indicators that are selected as representative of a certain quantity and one or more of this number fails to meet the specified tests, acceptance of all items shall be withheld until the extent and cause of failure is determined. For operational reasons, individual tests may be continued pending investigation of a sampling test failure, but the final acceptance of the product is contingent upon the inspectors's decision regarding the over-all conformance of the product to specification requirements. Rejected units shall be replaced or reworked to correct the defects, after which all necessary tests shall be repeated. Rejected equipment shall not be resubmitted for inspection without furnishing all particulars concerning previous rejections and the measures taken to correct the defects. If investigation indicates that the defects may exist in items previously accepted, full particulars concerning the defects found, including recommendations for correction, will be furnished to the procuring agency.

4.5 Destroyed items. All parts, specimens, or assemblies destroyed in making tests required by this specification or drawings, to determine compliance with the specification or drawings, shall be in addition to the quantity specified in the contract or purchase order and shall be furnished without increasing the cost of the contract or order.

4.6 Inspection and testing preparation for delivery. Sample items or packs and the inspection of the preservation, packaging, packing, and marking for shipment and storage shall be in accordance with requirements of section 5 and the documents specified therin.

Downloaded from http://www.everyspec.com

5. PREPARATION FOR DELIVERY

5.1 Preservation and packaging.

5.1.1 Level A.. Each indicator shall be preserved in accordance with method 1A8 of MIL-P-116. Indicators shall be intimately wrapped in MIL-P-17667 paper to prevent abrasion of the 1A8 barrier and cushioned with two inches of Class 3, Grade B of MIL-C-2861 cushioning between all areas of the indicator and unit container. Quantity unit pack shall be one of a container 10x6x6 inches, conforming to requirements of PPP-B-636.

5.1.2 Level C. Preservation and packaging shall afford adequate protection from corrosion, deterioration, and physical damage during direct shipment from supply store to first receiving activity for immediate use.

5.2 Packing.

5.2.1 Level A. Unit containers shall be used as shippng containers for shipments of one control. Each shipment of controls in excess of one shall be multiple packed within shipping containers conforming to specification PPP-B-636, weather-resistant class. Weight and size limitations of PPP-B-636 shall not be exceeded.

5.2.2 Level B. Same as 5.2.1.

5.2.3 Level C. Controls shall be packed in a manner that will ensure safe delivery at the lowest transportation rate to the initial point of delivery. Containers shall meet consolidated freight classification rules of regulations of other carriers as applicable to the mode of transportation.

5.3 Marking. Marking shall be in accordance with MIL-STD-129.

6. NOTES

6.1 Intended use. The course indicator covered by this specification is a combination pictorial heading, cross-pointer indicator, course selector, ambiguity indicator and deviation indicator. Course Indicator ID-387/ARN manufactured in accordance with this specification shall operate satisfactorily in each detail when used in conjunction with Radio Receiving Sets AN/ARN-14( ), and AN/ARN-18.

6.1.1 Instrument approach indicator. The course indicator is a pictorial heading, cross-pointer indicator obtained by combining the indications from the localizer, glideslope, and marker beacon equipment of the Air Force Instrument Approach System with the indications obtained from a gyrosyn compass. The combination of localizer and heading indications provide information by which a pilot can make an asymptotic approach to the localizer course.

6.1.2 Omni-directional range indicator. The course indicator is an omni-directional range indicator including a course selector and an abiguity

Downloaded from http://www.everyspec.com

indicator which provides indications received from the omni-course indicator, and the combination of deviation and heading indications provides information by which a pilot can make an asymtotic approach to the omni-directional range course.

6.2 Ordering data. Invitations for bids, contracts, and purchase orders should state the conditions for the following:

6.2.1 Preproduction tests. It is expected that the contract or purchase order will specify that five course indicators will be required as First Articles (or preproduction samples) and that these First Articles (or preproduction samples) will be subjected to the preproduction tests to determine compliance with the requirements of the specification. The invitation for bids and the contract should specify the point of inspection for these tests.

6.2.2 Levels of packaging and packing. Levels of packaging and packing shall be specified.

6.3 Patent notice. When Government drawings, specifications, or other data are used for any purpose other than in connection with a definitely related Government procurement operation, the United States Government thereby incurs no responsibility nor any obligation whatsoever; and the fact that the Government may have formulated, furnished, or in any way supplied the said drawings, specifications or other data is not to be regarded by implication or otherwise as in any manner licensing the holder or any other person or corporation, or conveying any rights or permission to manufacture, use or sell any patented invention that may in any way be related thereto.

6.4 Subject term (key word) listing.

Alarm
Ambiguity
Approach
Asymptotic
Course
Datum
Deviation
Flag
Heading
Indicator
Instrument
Pictorial
Pointer
Position
Relative
Resolver
Rotation
Rotor
Scale
Stator

Downloaded from http://www.everyspec.com

6.5 Changes from previous issue. Asterisks (or vertical lines) are not used in this revision to identify changes with respect to the previous issue due to the extensiveness of the changes.

Custodian:
Air Force - 99

Preparing activity:
Air Force - 84

Agent:
Air Force - 99

(project 5826-F194)

Downloaded from http://www.everyspec.com

STANDARDIZATION DOCUMENT IMPROVEMENT PROPOSAL

(See Instructions – Reverse Side)

1. DOCUMENT NUMBER
MIL-I-9229A(USAF)

2. DOCUMENT TITLE
INDICATOR, COURSE ID-387/ARN

3a. NAME OF SUBMITTING ORGANIZATION

b. ADDRESS *(Street, City, State, ZIP Code)*

4. TYPE OF ORGANIZATION *(Mark one)*

- ☐ VENDOR
- ☐ USER
- ☐ MANUFACTURER
- ☐ OTHER *(Specify)*: _____

5. PROBLEM AREAS

a. Paragraph Number and Wording:

b. Recommended Wording:

c. Reason/Rationale for Recommendation:

6. REMARKS

7a. NAME OF SUBMITTER *(Last, First, MI)* – Optional

b. WORK TELEPHONE NUMBER *(Include Area Code)* – Optional

c. MAILING ADDRESS *(Street, City, State, ZIP Code)* – Optional

8. DATE OF SUBMISSION *(YYMMDD)*

DD FORM 82 MAR 1426

PREVIOUS EDITION IS OBSOLETE.