INCH-POUND
MIL-I-45932/1C
2 MAY 1994
SUPERSEDING
MIL-I-45932/1B
2 MARCH 1989

MILITARY SPECIFICATION SHEET

INSERT, SCREW THREAD - THIN WALL, LOCKED IN

This specification is approved for use by all Departments and Agencies of the Department of Defense.

The requirements for acquiring the product described herein shall consist of this specification sheet and the issue of the following specification listed in that issue of the Department of Defense Index of Specifications and Standards (DODISS) specified in the solicitation: MIL-I-45932

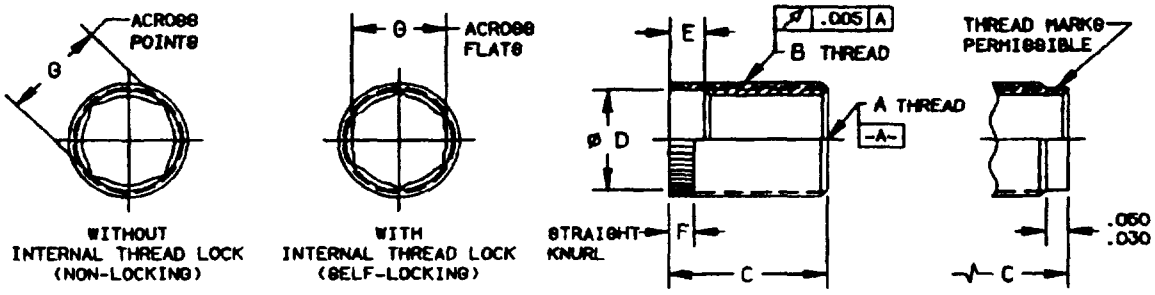

TABLE I. Dash numbers and characteristics

2/ DASH NUMBERS (REGT 7)				A	B EXT THREAD ALTERED MINOR DIA		C	ØD	E	F	G	MIN SHEAR ENGAGEMENT AREA SQ IN.
17-4PH CRES 1/	ALLOY STEEL 1/	A286 CRES 1/ SILVER PLATED	A286 CRES 1/ SOLID FILM LUBE	INT THD CLASS 3B (REGT 4)	THREAD SIZE	MAX MINOR DIA	±.010	+.008 -.002	+.015 -.000	(REF)	(REF)	(NOTE 2)
1 L	1 AL	1 CL	1 DL	0.0840-56 UNC	0.1380-40 UNF	.1073	.170 .130	.086	.042	.032	.073 .080	.0189
2	2 A	2 C	2 D									
3 L	3 AL	3 CL	3 DL	0.1120-40 UNC	0.1640-32 UNC	.1380	.190	.116	.060	.050	.092 .100	.0436
4	4 A	4 C	4 D									
5 L	5 AL	5 CL	5 DL	0.1380-32 UNC	0.1900-32 UNF	.1620	.210	.142	.080	.055	.113 .120	.0542
6	6 A	6 C	6 D									
7 L	7 AL	7 CL	7 DL	0.1640-32 UNC	0.2160-28 UNF	.1890	.250	.169	.080	.055	.138 .150	.0823
8	8 A	8 C	8 D									
9 L	9 AL	9 CL	9 DL	0.1900-32 UNF	0.2500-28 UNF	.2170	.290	.192	.080	.075	.157 .180	.1098
10	10 A	10 C	10 D									
11 L	11 AL	11 CL	11 DL	0.1900-24 UNC							.157 .180	
12	12 A	12 C	12 D									
13 L	13 AL	13 CL	13 DL	0.2500-28 UNF	0.3125-24 UNF	.2785	.380	.252	.095	.075	.210 .240	.2037
14	14 A	14 C	14 D									
15 L	15 AL	15 CL	15 DL	0.2500-20 UNC							.210 .240	
16	16 A	16 C	16 D									
17 L	17 AL	17 CL	17 DL	0.3125-24 UNF	0.3750-24 UNF	.3405	.470	.314	.110	.075	.266 .310	.3306
18	18 A	18 C	18 D									
19 L	19 AL	19 CL	19 DL	0.3125-18 UNC							.266 .310	
20	20 A	20 C	20 D									
21 L	21 AL	21 CL	21 DL	0.3750-24 UNF	0.4375-20 UNF	.4010	.560	.377	.110	.105	.322 .370	.4577
22	22 A	22 C	22 D									
23 L	23 AL	23 CL	23 DL	0.3750-16 UNC							.322 .370	
24	24 A	24 C	24 D									
25 L	25 AL	25 CL	25 DL	0.4375-20 UNF	0.5000-20 UNF	.4630	.660	.439	.135	.105	.377 .430	.6522
26	26 A	26 C	26 D									
27 L	27 AL	27 CL	27 DL	0.4375-14 UNC							.377 .430	
28	28 A	28 C	28 D									
29 L	29 AL	29 CL	29 DL	0.5000-20 UNF	0.5625-24 UNEF	.5290	.750	.505	.135	.105	.439 .490	.8490
30	30 A	30 C	30 D									
31 L	31 AL	31 CL	31 DL	0.5000-13 UNC							.439 .490	
32	32 A	32 C	32 D									
33 L	33 AL	33 CL	33 DL	0.5625-18 UNF	0.6875-12 UN	.6130	.840	.571	.145	.135	.481 .550	1.1328
34	34 A	34 C	34 D									
35 L	35 AL	35 CL	35 DL	0.5625-12 UNC							.481 .550	
36	36 A	36 C	36 D									
37 L	37 AL	37 CL	37 DL	0.6250-18 UNF	0.7500-16 UNF	.6870	.940	.634	.145	.135	.534 .620	1.4014
38	38 A	38 C	38 D									
39 L	39 AL	39 CL	39 DL	0.6250-11 UNC							.534 .620	
40	40 A	40 C	40 D									
41 L	41 AL	41 CL	41 DL	0.7500-16 UNF	0.8750-20 UNEF	.8240	1.120	.756	.170	.150	.648 .750	2.0543
42	42 A	42 C	42 D									
43 L	43 AL	43 CL	43 DL	0.7500-10 UNC							.648 .750	
44	44 A	44 C	44 D									

1/ "L" Suffix shown indicates self-locking insert.
2/ Dash numbers B & BL, 1 thru 16 inclusive, previously listed in MIL-I-45932/1A dated 21 October 1980 are inactive for new design. In addition, reference to dash numbers B & BL, 1 thru 16 inclusive, have been omitted from table I based on Government inventory history of non-usage.

REQUIREMENTS:

1. Material:
   Steel, alloy, grade 4130 (UNS G41300) per AMS6370 or grade 8740 (UNS G87400) per AMS6322.
   Steel, corrosion-resistant, type 17-4 PH (UNS S17400) per AMS5643.
   Steel, corrosion-resistant, type A286 (UNS S66286) per AMS5731 or AMS5734.

2. Protective coating or treatment:
   Steel, alloy, shall be cadmium plated per QQ-P-416 type III class 3, plus solid film lubricant coating per MIL-L-46010, type I.
   Steel, corrosion-resistant, type 17-4 PH, shall be solid film lubricant coated per MIL-L-46010, type I.
   Steel, corrosion-resistant, type A286,
   Dash C & CL shall be silver plated per AMS2411 grade B, .0002 thick min
   Dash D & DL shall be solid film lubricant coated per MIL-L-46010, type I.

3. Surface roughness:
   Machined surfaces shall be 125 microinches in accordance with ANSI/ASME B46.1 except knurling.

4. Threads:
   Threads shall be in accordance with MIL-S-7742 except as noted in table I and shall accept external MIL-S-8879 threads. All coarse internal threads have an increased minor diameter. Threads are prior to the addition of solid film lubricant.

5. Hardness:
   Alloy steel, 25-34 HRC
   Corrosion-resistant steel, 17-4 PH, 35-42 HRC
   Corrosion-resistant steel, A286, 32-40 HRC

6. Internal thread locking feature:
   The centerline of the internal thread locking feature shall be approximately mid-length of internal thread except -1 size is located on a pilot at the bottom of insert.

7. Part Identifying Number (PIN):
   Consists of the letter M, the basic number of the specification sheet, and a dash number taken from table I.

   Example of PIN:

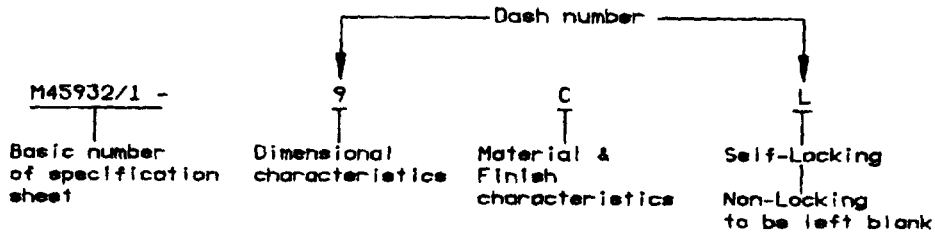

M45932/1-9CL Insert, Screw Thread - Thin Wall, Locked In, 0.1900-32 UNF-3B Internal Thread, A286 Corrosion Resistant Steel, Silver Plated, Self-Locking

M45932/1-10D Insert, Screw Thread - Thin Wall, Locked In, 0.1900-32 UNF-3B Internal Thread, A286 Corrosion Resistant Steel, Solid Film Lubricant Coated, Non - Locking.

NOTES:

1. Dimensions:
   All dimensions are in inches, to be met after plating and before the addition of solid film lubricant (see requirement 2 herein).

2. Shear engagement area:
   Shear engagement area is the assembled dimensional value for the overall engaged area of mating thread members. It does not represent a dimension of either of the members in an unassembled condition.

HOLE PREPARATION, INSTALLATION & REMOVAL REQUIREMENTS

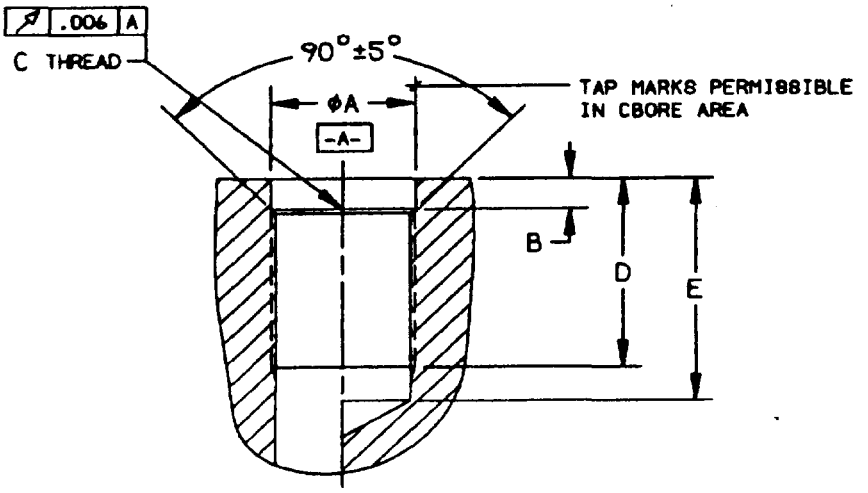

TABLE II. Installation & removal criteria

NOMINAL EXTERNAL THREAD SIZE OF INSERT (REF)	INSERT DASH NUMBER M45932/1 (REF)	ØA CBORE +.004 -.001	B CBORE DEPTH (NOTE 4a) ±.005	C THREAD MIL-S-8879		D MINIMUM FULL THREAD DEPTH	E MINIMUM DRILL DEPTH BLIND HOLE	INSERT REMOVAL DRILL SIZE (NOTE 5)
				CLASS-3B EXCEPT MINOR Ø	CONTROLLED MINOR Ø			
0.1380-40	1 2	.138	.045-.050	0.1380-40 UNJF	.112-.117	.160	.223	#30
0.1640-32	3 4	.164	.052	0.1640-32 UNJC	.139-.144	.220	.298	5/32
0.1900-32	5 6	.187	.065	0.1900-32 UNJF	.165-.170	.240	.318	#17
0.2160-28	7 8	.216	.065	0.2160-28 UNJF	.190-.195	.280	.369	#5
0.2500-28	9 10 11 12	.250	.082	0.2500-28 UNJF	.220-.225	.325	.414	15/64
0.3125-24	13 14 15 16	.312	.082	0.3125-24 UNJF	.280-.285	.415	.519	19/64
0.3750-24	17 18 19 20	.375	.082	0.3750-24 UNJF	.342-.347	.505	.609	23/64
0.4375-20	21 22 23 24	.437	.113	0.4375-20 UNJF	.403-.408	.595	.720	27/64
0.5000-20	25 26 27 28	.500	.113	0.5000-20 UNJF	.467-.472	.695	.820	31/64
0.5625-24	29 30 31 32	.562	.113	0.5625-24 UNJEF	.530-.535	.785	.889	35/64
0.6875-12	33 34 35 36	.687	.150	0.6875-12 UNJ	.624-.629	.873	1.081	43/64
0.7500-16	37 38 39 40	.750	.156	0.7500-16 UNJF	.702-.707	.967	1.123	47/64
0.8750-20	41 42 43 44	.875	.156	0.8750-20 UNJEF	.843-.848	1.155	1.280	55/64

NOTES:

1. Axis of hole shall be normal to entry surface or provide spot face when required.

2. Machined surfaces shall be 125 microinches in accordance with ANSI/ASME B46.1.

3. All dimensions are in inches.

4. Install insert:
   (a) These inserts are primarily designed for use in aluminum, magnesium and other non-ferrous materials that do not exceed 187 HB (3000 kg load and 10 mm ball). Use in corrosion-resistant steels, titanium and hardened ferrous materials will require broaching serrations in counterbore to accept the insert knurls during swaging operation. Installation in steel will also require counterbore depth "B" in table II to be increased by .015 inches.

   (b) Install inserts -1 thru -8 into hole until the top of insert is .010-.020 below boss surface and -9 thru -44 inserts .015-.025 below boss surface.

   (c) Place swage tool in insert and apply a downward force sufficient to effect full swageout and external lock setting.

INSERT INSTALLATION

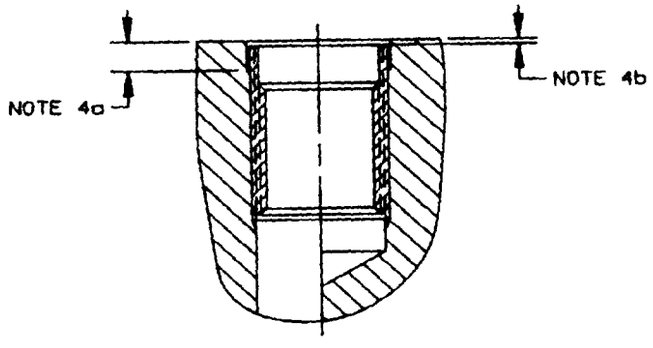

VIEW
INSERT BEFORE SWAGING

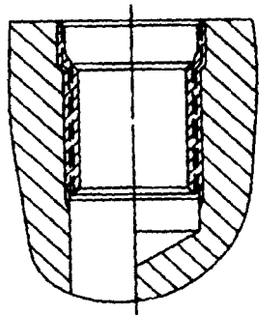

VIEW
INSERT AFTER SWAGING

5. Replacement of inserts are made with same size inserts as those removed. Using removal drill size shown in table II, drill to depth "B" + .025 then back-out insert using installation wrench or a square type screw extractor. Remove loose chips, re-inspect hole and then re-install per note 4.

Custodians:
Army - AR
Navy - AS
Air Force - 99

Review activities:
Army - AT, AV, ER, ME, MI
Navy - MC, OS, YD
DLA - IS
NSA - NS

Preparing activity:
Army - AR

(Project 5340-2196)