Downloaded from http://www.everyspec.com

INCH-POUND

MIL-I-25623B

15 February 1990
SUPERSEDING
MIL-I-25623A
5 MAY 1961

MILITARY SPECIFICATION

INDICATOR, ELECTRICAL TACHOMETER

This specification is approved for use by all Department and Agencies of the Department of Defense.

1. SCOPE

1.1 Scope. This specification covers one type of hermetically sealed, remote indicating percent speed tachometer indicator.

2. APPLICABLE DOCUMENTS

2.1 Government documents.

2.1.1 Specifications and standards. The following specifications and standard form a part of this document to the extent specified herein. Unless otherwise specified, the issues of these documents are those listed in the issue of the Department of Defense Index of Specifications and Standards (DODISS) and supplement thereto, cited in the solicitation (see 6.2).

SPECIFICATIONS

Federal

PPP-B-601 Boxes, Wood, Cleated Plywood

Beneficial comments (recommendations, additions, deletions) and any pertinent data which may be of use in improving this document should be addressed to: Oklahoma City Air Logistics Center/MMEOR, Tinker AFB OK 73145-5990 by using the self-addressed Standardization Document Improvement Proposal (DD Form 1426) appearing at the end of this document or by letter.

AMSC N/A FSC 6620

DISTRIBUTION STATEMENT X. Distribution authorized to U.S. Government agencies and private individuals or enterprises eligible to obtain export-controlled technical data in accordance with regulations implementing 10 U.S.C. 140c, 13 April 1988. Controlling DoD Office is OC-ALC/MMEOR, Tinker AFB OK 73145-5990.

WARNING. This document contains technical data whose export is restricted by the Arms Export Control Act (Title 22, U.S.C., Sec. 2751 et seq.) or Executive Order 12470. Violations of these export laws are subject to severe criminal penalties.

DESTRUCTION NOTICE. For classified documents follow the procedure in DoD 5200.22-M, Industrial Security Manual, Section II-19 or DoD 5200.1-R, Information Security Program Regulation, Chapter IX. For unclassified limited documents, destroy by any method that will prevent disclosure of contents or reconstruction of the document.

Downloaded from http://www.everyspec.com

PPP-B-636	Box, Shipping, Fiberboard

Military

MIL-P-116	Preservation, Method Of
MIL-S-7742	Screw Threads, Standard, Optimum Selected Series, General Specification For
MIL-G-9398	Generator, Tachometer, Two-pole, High Temperature, Aircraft
MIL-G-26611	Generator, Tachometer, GEU-7/A Miniature

STANDARDS

Federal

FED-STD- 595	Colors

Military

DOD-STD-100	Engineering Drawing Practices
MIL-STD-129	Marking For Shipment And Storage
MIL-STD-130	Identification Marking Of U.S. Military Property
MIL-STD-810C	Environmental Test Methods
MIL-STD-838	Lubrication Of Military Equipment
MIL-STD-889	Dissimilar Metals
MIL-STD-970	Standards & Specification Order Of Preference For The Selection Of
MIL-STD-2073/1A	DOD Materiel Procedures For Development And Application Of Packaging Requirements
MS33558	Numerals and Letters, Aircraft Instrument Dial, Standard Form Of
MS33585	Pointers, Dial, Standard Design Of Aircraft Instrument
MS33639	Cases, Instrument, Clamp-Mounted, Aircraft
MS33678	Connectors, Receptacle, Electric, Integral Mounting

(Unless otherwise indicated, copies of federal and military specifications and standards are available from the Naval Publications and Forms Center, (ATTN: NPODS), 5801 Tabor Avenue, Philadelphia, Pennsylvania 19120-5099.)

(Copies of MIL-STD-810C are available from Director, Navl Publications & Printing Service Office, 700 Robbins Ave, Bldg 4, Section D, Philadelphia, Pennsylvania 19111.)

2.2 Non-Government publications. The following document(s) form a part of this document to the extent specified herein. Unless otherwise specified, the issues of the documents which are DOD adopted are those listed in the issue of the DODISS cited in the solicitation. Unless otherwise specified, the issues of documents not listed in the DODISS are the issue of the documents cited in the solicitation (6.2).

American Society For Testing And Materials (ASTM)

ASTM C1036 Glass, Flat, Standard Specification For

Downloaded from http://www.everyspec.com

ASTM D3951 Packaging, Commercial

(Application for copies should be addressed to: ASTM, 1916 Race St, Philadelphia PA 19103.)

(Non-Government standards and other publications are normally available from the organizations that prepare or distribute the documents. These documents also may be available in or through libraries or other informational services.)

2.3 Order of precedence. In the event of a conflict between the text of this document and the references cited herein (except for related associated detail specifications, specification sheets or MS standards), the text of this document take precedence. Nothing in this document, however, supersedes applicable laws and regulations unless a specific exemption has been obtained.

3. REQUIREMENTS

3.1 Qualification. The indicator furnished under this specification shall be products which are authorized by the qualifying activity for listing on the applicable qualified products list at the time of award of contract (see 4.2 and 6.4).

3.2 Selection of standards and specifications. Standards and specifications for necessary commodities and services not specified herein shall be selected in accordance with MIL-STD-970.

3.3 Materials.

3.3.1 Nonmagnetic materials. Nonmagnetic materials shall be used for all parts of the indicator, except where magnetic materials are essential.

3.3.2 Metals. Metals shall be of the corrosion-resistant type or shall be suitably protected to resist corrosion during normal service life.

3.3.3 Dissimilar metals. Dissimilar metals are defined in Standard MIL-STD-889 and shall not be used in intimate contact with each other unless suitably protected against electrolytic corrosion by means of protective coating or hermetic sealing.

3.3.4 Fungus-proof materials. Materials which are not nutrients for fungi shall be used to the greatest extent practicable. In cases where materials that are nutrients for fungi must be used, such materials shall be treated with a fungicidal agent or be protected by hermetic sealing.

3.3.5 Corrosive fumes. The materials, as installed in the indicator and under the service conditions specified in 3.5, shall not liberate deleterious fumes.

3.3.6 Protective treatment. When materials are used in the construction of the indicator that are subject to corrosion in salt air or other atmospheric conditions likely to occur during service usage, they shall be protected against such corrosion in a mannner that will in no way prevent compliance with the performance requirements of this specification. The use of any protective coating that will crack, chip, or scale with age or extremes of atmospheric conditions shall be avoided.

3.3.7 Recycled and reclaimed materials. Recycled and reclaimed materials shall be encouraged to the maximum extent possible without jeopardizing the intended end use

Downloaded from http://www.everyspec.com

of the item.

3.4 Design and construction. The indicator shall be designed for operation from the varying-frequency alternating-current output of tachometer generators conforming to specifications MIL-G-9398 and MIL-G-26611. The frequency of the generator output shall be proportional to the speed at which the generator is rotating. The design shall be such that with increasing and decreasing speeds the pointers shall move smoothly at a uniform rate consistent with the speed change. The indicator shall be constructed so that no parts will work loose in service. The indicator shall be built to withstand the strains, jars vibrations, and other conditions incident to shipping, storage, installation, and service. The indicator shall be constructed so that adjustments and repairs can be easily made by the personnel of operating units and overhaul bases.

3.5 Performance. The indicator shall satisfy the following performance requirements and conditions when subjected to the applicable tests of section 4:

(a) Indicator starting - Starting and synchronous operation at an indicated speed of 2.5 percent revolutions per minute or greater, with the following maximum power applied;

(1) Room temperature - 0.525 volt (V) at 150 cycles per minute (CPM).
(2) -54° C temperature - 0.60V at 150 CPM.

(b) Scale error - Scale error operation at room temperature, -54° C, -35° C, 5°C, and $+71^{\circ}$C temperatures in accordance with tables I and II.

(c) Friction error - Friction error not to exceed 1.5 percent at the 5-percent graduation, 0.7 percent at the 20-percent graduation, and 0.5 percent at the 40-, 70-, 85-, and 100-percent graduations.

(d) Position error - Position error not to exceed 0.3 percent when positioned 45 degrees each way from the normal operating position with the indicator operating at 100-percent indication.

(e) Pointer alignment - On subdial indicators when the main pointer indicates 90 and 96 percent, the subdial pointer shall indicate 0 and 6 percent, respectively, within 0.20 percent.

(f) Sealing - Case leakage not to exceed 0.01 micro cubic foot per hour when the filling medium is nitrogen and helium and 0.1 micro cubic foot per hour when the filling medium is 100-percent helium.

(g) Dielectric strength - Withstand test voltage of 400V root mean square (RMS) for a period of 5 seconds between connector pins and any metal part of case or connector shell.

(h) Magnetic effect. Subject the indicator, operating at 90 percent RPM and nonoperating, rotated in increments of 45 degrees from normal, and positioned 5.50 inches from the center of a free-magnet compass having a field intensity of 0.17 to 0.19 oersted, without deflecting the compass more than 3 degrees.

(i) Vibration. Subjected to circular vibration in a plane inclined 45 degrees to the horizontal under the following conditions:

Downloaded from http://www.everyspec.com

TABLE I. Calibration scale errors.

Generator drive shaft speed	Correct indicated speed	Scale error tolerance Room temperature	Scale error tolerance -35° C	-54° C	+71° C	-5° C
RPM	Percent RPM	±Percent RPM	±Percent RPM			
1/ 0	0	0.5	0.6	0.6	0.5	0.6
1/ 210	5	0.5	0.6	0.6	0.5	0.6
1/ 420	10	0.5	0.6	0.6	0.5	0.6
630	15	0.5	---	---	---	---
1/ 840	20	0.5	0.6	0.7	0.5	0.6
1,260	30	0.6	---	---	---	---
1/1,680	40	0.8	1.1	1.2	1.0	1.1
2,100	50	0.8	---	---	---	---
1/2,520	60	0.8	1.2	1.4	1.0	1.1
2,940	70	0.8	---	---	---	---
1/3,150	75	0.5	1.0	1.3	0.8	0.8
1/3,360	80	0.5	1.0	1.4	0.8	0.8
1/3,570	85	0.5	1.0	1.4	0.8	0.9
1/3,780	90	0.5	1.1	1.5	0.8	0.9
1/3,990	95	0.5	1.1	1.5	0.8	0.9
1/4,200	100	0.5	1.1	1.5	0.8	0.9
1/4,410	105	0.5	1.2	1.6	0.8	1.0
4,620	110	0.5	---	---	---	---

1/ See 4.6.11

Downloaded from http://www.everyspec.com

TABLE II. Calibration scale errors.

Speed	Correct indication	Scale error Tolerance Room temperature	Scale error tolerance -35° C	-54° C	+71° C	-5° C
RPM	Percent RPM	±Percent RPM	±Percent RPM			
1/ 0	0	0.5	0.6	0.6	0.5	0.6
1/ 200	4.76	0.5	0.6	0.6	0.5	0.6
1/ 400	9.52	0.5	0.6	0.6	0.5	0.6
600	14.29	0.5	---	---	---	---
1/ 800	19.05	0.5	0.6	0.7	0.5	0.6
1,200	28.57	0.6	---	---	---	---
1/1,600	38.10	0.8	1.1	1.2	1.0	1.1
2,000	47.62	0.8	---	---	---	---
1/2,400	57.14	0.8	1.2	1.4	1.0	1.1
2,800	66.67	0.8	---	---	---	---
1/3,200	76.19	0.5	1.0	1.3	0.8	0.8
1/3,400	80.95	0.5	1.0	1.4	0.8	0.8
1/3,600	85.71	0.5	1.0	1.4	0.8	0.9
1/3,800	90.48	0.5	1.1	1.5	0.8	0.9
1/4,000	95.24	0.5	1.1	1.5	0.8	0.9
1/4,200	100.00	0.5	1.1	1.5	0.8	0.9
1/4,400	104.76	0.5	1.2	1.5	0.8	0.9
4,600	109.52	0.5	---	---	---	---

1/ See 4.6.11

Downloaded from http://www.everyspec.com

(1) Error. Shall not exceed 0.7 percent RPM when operating at a point between 60 and 90 percent RPM and at an amplitude of 0.009 to 0.011 inch while the frequency is varied from 5 to 50 Hertz (HZ).

(2) Failure. No evidence of failure when operated at 50 percent RPM and vibrated for 3 hours at an amplitude of 0.018 to 0.020 inch while the frequency is cycled between 5 and 50 Hz and return once each hour during this test.

(j) Indicator current. The current drawn by each of the 3-phase windings shall not exceed 0.3 ampere when connected to 21V 4,200 CPM supply.

(k) Temperature. Subjected to temperature ranging from -62° C to +85° C without failure.

(l) Overspeed and reverse operation. Subjected to a generator-shaft speed of 5,000 RPM for 5 minutes and then operated in the reverse direction at a generator-shaft speed of 2,500 RPM for 1 minute without exceeding a scale error of 0.5 percent.

(m) Endurance. Subjected to 1,000 hours operation at 90 ±5 percent indication without damage.

(n) Thermal shock. Subjected to 4 cycles of exposure to water baths maintained at a temperature of 85° ±2° C and 5° ±2° C without evidence of leakage when subjected to the sealing test.

(o) Precipitation. Subjected for a period of 2 hours at an ambient temperature of 85° ±2° C, and then immediately immersed in a liquid bath maintained at 0° to 5° C without evidence of moisture deposit on the inner face of the cover glass.

(p) Fogging. Subjected to 70°±2° C controlled temperature for a minimum of 1 hour, and then the indicator glass face immediately rubbed with an ice cube while at this temperature without evidence of moisture or oil fogging.

(q) Salt fog. Subjected to salt fog for a period of 50 hours in accordance with 4.6.25 without evidence of external corrosion or deterioration affecting subsequent operation.

(r) Internal examination. Subjected to examination internally for corrosion, deterioration, or damage resulting from all tests specified herein.

3.6 Interchangeability. All parts having the same manufacturer's part number shall be directly and completely interchangeable with each other with respect to installation and performance. Changes in manufacturer's part numbers shall be governed by the drawing number requirements of Specification DOD-STD-100.

3.7 Case. The case shall be in accordance with figure 1 and shall provide a hermetically sealed enclosure for the internal mechanism of the indicator. The design of the case shall be such that the internal mechanism may be removed from the case, replaced, and the case resealed. This shall be accomplished without the use of special tools and fixtures unless they are approved by the contracting activity. The hermetic sealing shall be so accomplished that the action of any atmosphere to which the indicator may be subjected. The distance between the outer surface of the

Downloaded from http://www.everyspec.com

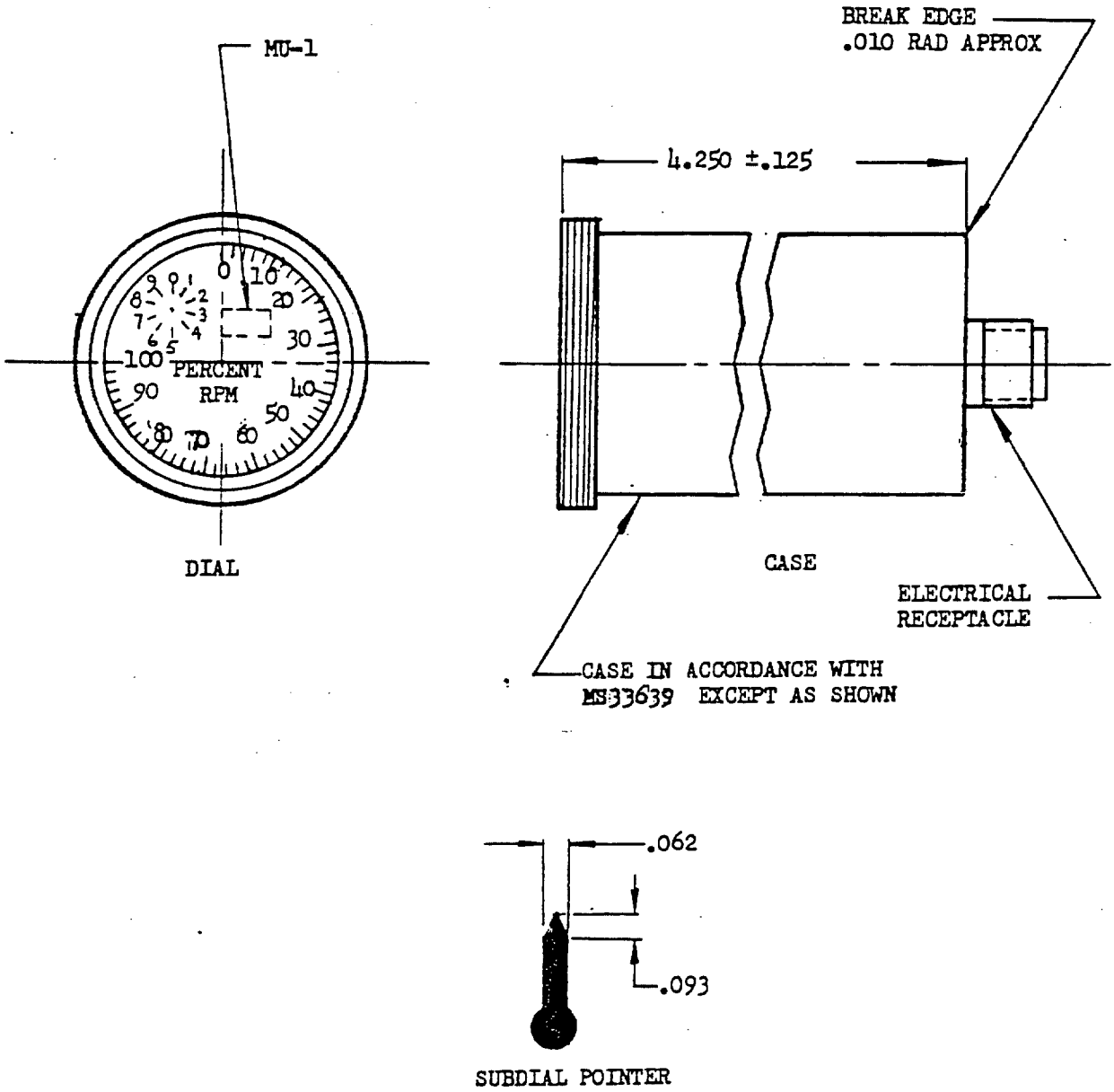

DIMENSIONS IN INCHES. UNLESS OTHERWISE SPECIFIED, TOLERANCES: DECIMALS ±.016.

Figure 1. Case and dial.

Downloaded from http://www.everyspec.com

cover glass and the front edge of the case shall be the minimum practicable and shall not exceed 0.031 inch.

3.7.1 Material. The hermetically sealed case shall be constructed of a suitable material applicable to hermetic sealing, and the material shall be uniform in texture with a smooth external surface.

3.7.2 Finish. The portion of the indicator case exposed to view from the front of the mounting panel shall be finished in durable dull black. The finish applied to the remainder of the case shall be optional, provided that the finish used will in no way prevent compliance with the requirements of this specification.

3.7.3 Filling medium. Where a hermetically sealed case is used the filling medium shall be of at least 98 percent purity, free of dust particles, and contain not more than 0.006 milligram of water vapor per liter (dewpoint -65° C) at the filling pressure. The filling medium shall be either 100 percent helium or a mixture of 88 percent to 92 percent nitrogen and the remainder helium. The absolute pressure of the filling medium in the case shall be approximately one atmosphere. If practicable, the 100-percent helium filling medium shall be utilized.

3.8 Cover Glass. The cover glass shall be in accordance with type II, AA quality, of Specification ASTM C1036. The thickness of the glass shall be the minimum practicable and entirely suitable for the purpose. Any flaws allowed by Specification ASTM C1036 shall not interfere with the readability of the instrument.

3.8.1 Dial to cover glass distance. The distance between the inside surface of the cover glass and the indicator dial shall be the minimum practicable and shall not exceed 0.188 inch.

3.9 Dial. The dial and subdial shall consist of one flat surface on a single plane. The dial shall be securely fastened to the frame of the mechanism in such a manner that it will not loosen or turn when the indicator is vibrated. If screws are used for attaching the dial, they shall be located so that they will not interfere with any dial marking or prevent proper location of dial marking. The background of the indicator dial and the unshaded portion of the pointer shall be finished in durable dull black. The dial shall have a minimum diameter of 1.75 inches when measured across the outside ends of the graduations. The diameter of the subdial, when measured across the outside ends of the graduations, shall be 2.286 $\pm$0.156 inch.

3.9.1 Markings. The dial markings shall conform to figure 1 and shall be so durable as to withstand usage in service. The 100-percent RPM graduation shall be located on the horizontal centerline at the left side of the dial. The dial finish shall be lusterless black, color No. 37038 of FED-STD-595, and the dial markings and shaded portions of the pointer shall be lusterless white, color No. 37875 of FED-STD-595. Unless otherwise specified, the style, proportions, numerals, and letters placed on the dial shall conform to MS33558. Numerals shall distinctly indicate the graduation to which each applies. Any confusion resulting in doubt as to which graduation the numeral applies shall be cause for rejection. The dial graduation shall be uniformly spaced. The dimensions of the markings shall be as specified in table III.

3.10 Electrical receptacle. Each indicator shall be provided with a three-pin electrical receptacle conforming to MS33678-10SL-3P located on the vertical and horizontal centerlines of the indicator with the polarizing key of the receptacle at the top. The receptacle shall be of the hermetically sealed type.

Downloaded from http://www.everyspec.com

3.11 Pointers. The subdial pointer shall conform to figure 1. Its length shall be such that the tip will extend into the scale a distance equal to 0.50 to 0.75 of the length of the graduation. The main dial pointer shall conform to MS33585-8.

TABLE III. Dimension of markings.

Marking	Height or length ±0.016	Width of line or graduation ±0.005
Numerals 0, 10, 20, 30, 40, 50, 60, 70, 80, 90, and 100	0.141	0.020
Numerals 1, 2, 3, 4, 5, 6, 7, 8, 9, 0	0.094	0.016
10-percent graduations	0.141	0.025
2-percent graduations	0.093	0.016
Subdial graduations	0.063	0.010
Lettering "Percent"	0.093	0.016
Lettering "RPM"	0.125	0.016
Lettering "MU-1"	0.063	0.010

3.12 Indication. The tachometer indicator shall indicate 100-percent speed of the engine when the generator is driven at 4,200 RPM. The indicator shall indicate 0- to 100-percent speed in approximately 270-degree pointer travel. The subpointer shall make one complete revolution for each 10-percent change in indication of the main pointer. It shall be possible to read 110-percent by using the subpointer for the last 10 percent, and the main pointer shall indicate at a point equal to 110-percent RPM when the subdial is indicating 110-percent RPM.

3.13 Wiring. The three leads from the indicator windings shall be designated as B, A, and C (conforming to phases 1, 2, and 3). The leads shall be connected to the B, A, and C pins of the electrical receptacle in such a manner that when 3-phase power with phase rotation sequence B-A-C is applied, the resultant indicator reading is positive.

3.13.1 Electrical connections. Electrical connections for counterclockwise generator drive shaft rotation (when viewed from the shaft end), for operating one or two indicators, shall conform to the wiring diagram shown on figure 2. For clockwise rotation, reverse leads A and B at generator plug.

3.14 Stops. The indicator mechanism shall be provided with a stop which, upon reverse operation of the indicator motor, will stop the pointer motion after traveling through an arc equal to not less that 2 percent.

3.15 Lubrication. Lubrication shall be accomplished in accordance with Specification MIL-STD-838, except that the selection of lubricants used shall be approved by the contracting activity.

3.16 Screw threads. Unless otherwise specified, the threads of all machine screws, shall conform to Specification MIL-S-7742.

3.17 Weight. The weight of each indicator shall not exceed 1 pound.

3.18 Identification of product. Equipment, assemblies, and parts shall be marked for identification in accordance with Standard MIL-STD-130.

Downloaded from http://www.everyspec.com

3.19 Workmanship.

3.19.1 General. The indicator, including all parts and accessories, shall be constructed and finished in a thoroughly workmanlike manner in accordance with MIL-STD-454 requirement 9. Particular attention shall be given to neatness and thoroughness of soldering, wiring, impregnation of coils, marking of parts and assemblies, welding and brazing, painting, riveting, machine-screw assemblies, and freedom of parts from burrs and sharp edges.

3.19.2 Dimensions. Dimensions and tolerances not specified shall be as close as is consistent with the best shop practices. Where dimensions and tolerances may affect the interchangeability, operation, or performance of the indicator, they shall be held or limited accordingly.

3.19.3 Screw assemblies. Assembly screws and bolts shall be tight. The word "tight" means that the screw or bolt cannot be appreciably tightened further without damage or injury to the screw, bolt, or threads.

3.19.4 Riveting. Riveting operations shall be carefully performed to insure that the rivets are tight and satisfactorily headed.

3.19.5 Cleaning. The indicator shall be thoroughly cleaned of loose, spattered, or excess solder, metal chips, and other foreign material, after final assembly. Burrs and sharp edges, as well as resin flash that may crumble shall be removed.

4 QUALITY ASSURANCE PROVISIONS

4.1 Responsibility for inspection. Unless otherwise specified in the contract or purchase order, the contractor is responsible for the performance of all inspection requirements (examinations and tests) as specified herein. Except as otherwise specified in the contract or purchase order, the contractor may use his own or any other facilities suitable for the performance of the inspection requirements specified herein, unless disapproved by the Government. The Government reserves the right to perform any of the inspections set forth in this specification where such inspections are deemed necessary to ensure supplies and services conform to prescribed requirements.

4.1.1 Responsibility for compliance. All items shall meet all requirements of sections 3 and 5. The inspection set forth in this specification shall become a part of the contractor's overall inspection system or quality program. The absence of any inspection requirements in the specification shall not relieve the contractor of the responsibility of ensuring that all products or supplies submitted to the Government for acceptance comply with all requirements of the contract. Sampling inspection, as part of manufacturing operations, is an acceptable practice to ascertain conformance to requirements, however, this does not authorize submission of known defective material, either indicated or actual, nor does it commit the Government to accept defective material.

4.2 Classification of inspection. The inspection requirements specified hrein are classified as follows:

(a) Qualification inspection (see 4.3).
(b) Quality Conformance inspection (see 4.4).

4.3 Qualification inspections. The qualification inspections shall consist of all the tests specified in 4.6.

Downloaded from http://www.everyspec.com

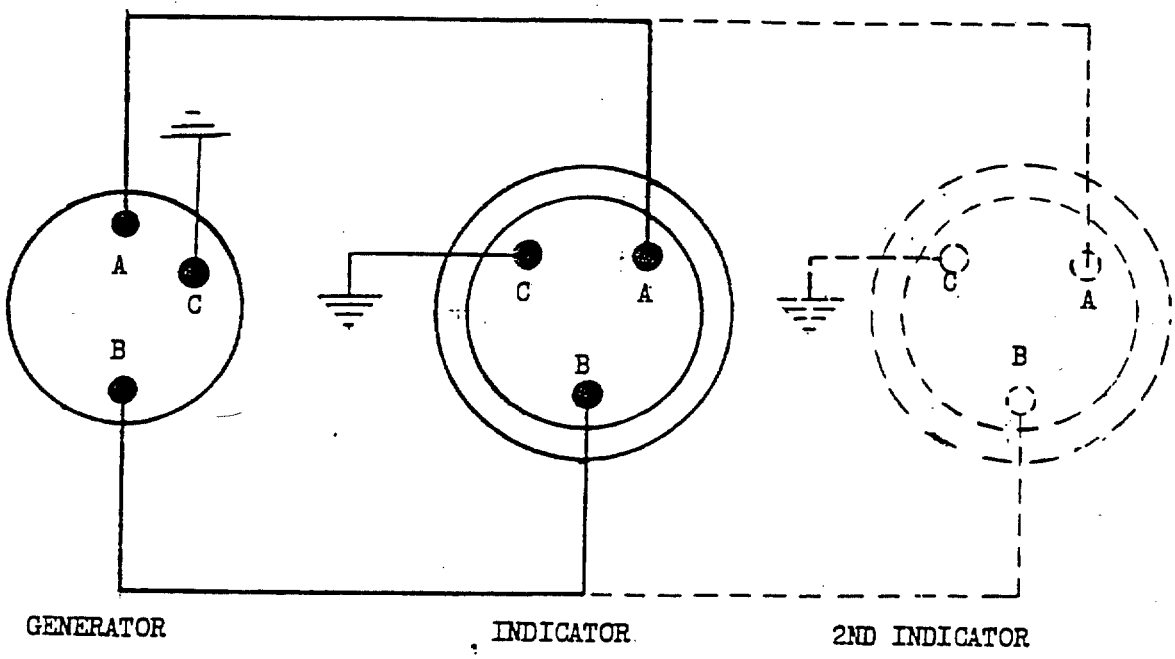

Figure 2. Wiring diagram.

Downloaded from http://www.everyspec.com

4.3.1 Sampling instructions. The qualification inspection samples shall consist of four indicators. Samples shall be identified with the manufacturer's own part number and any additional information required by the letter of authorization (see 6.4).

4.3.2 Qualification required. Prior to actual procurement, the product which this specification covers shall pass the qualification inspections specified herein. If the product is later modified in any way, the modified form shall be subjected to and shall pass the same qualification inspections.

4.4 Quality Conformance inspection. Quality conformance inspection shall consist of individual tests and sampling plans and tests.

4.4.1 Individual tests. Each indicator shall be subjected to the following tests:

(a)	Examination of product	(4.6.1)
(b)	Room temperature starting	(4.6.2)
(c)	Scale error at room temperature	(4.6.3)
(d)	Friction error	(4.6.4)
(e)	Position error	(4.6.5)
(f)	Pointer alignment	(4.6.6)
(g)	Sealing	(4.6.7)
(h)	Precipitation	(4.6.8)

4.4.2 Sampling plans and tests.

4.4.2.1 Sampling plan A. One indicator selected at random from each 100 or less produced on the contract or order shall be subjected to the following tests:

(a)	Individual tests	(4.4.1)
(b)	Low temperature starting	(4.6.10)
(c)	Scale error at -54° C	(4.6.11)
(d)	Scale error at -35° C	(4.6.12)
(e)	Scale error at -5° C	(4.6.13)
(f)	Scale error at high temperature	(4.6.14)
(g)	Dielectric strength	(4.6.15)
(h)	Magnetic effect	(4.6.16)
(i)	Vibration error	(4.6.17)
(j)	Fogging	(4.6.9)

4.4.2.2 Sampling plan B. Unless otherwise specified, 3 indicators selected at random from the first 15 items of the contract or order shall be subjected to the following tests:

(a)	Indicator current	(4.6.18)
(b)	Low-temperature exposure	(4.6.19)
(c)	High-temperature exposure	(4.6.20)
(d)	Vibration failure	(4.6.21)
(e)	Overspeed and reverse operation	(4.6.22)
(f)	Indicator endurance	(4.6.23)
(g)	Thermal shock	(4.6.24)
(h)	Salt fog	(4.6.25)
(i)	Internal examination	(4.6.26)

4.4.2.3 Rejection and retest. When one item selected from a production run fails to conform to this specification, no items still on hand or later produced shall be

Downloaded from http://www.everyspec.com

accepted until the extent and cause of failure are determined. After corrections have been made, all necessary tests shall be repeated.

4.4.2.3.1 Individual tests may continue. For operational and production reasons, individual tests may be continued pending the investigation of a sampling test failure. But final acceptance of items on hand or later produced shall not be made until it is determined that items conform to the new specification.

4.4.3 Defects in items already accepted. The investigation of a test failure could indicate that defects may exist in items already accepted. If so, the contractor shall fully advise the contracting activity of all defects likely to be found and methods of correcting them.

4.5 Inspection conditions. Unless otherwise specified, all inspections shall be performed in accordance with the test conditions specified in 4.5.1 in this specification.

4.5.1 Standard atmospheric conditions. Whenever the pressure and temperature existing at the time of the test are not specified definitely, it is understood that the test is to be made at atmospheric pressure (approximately 29.92 inches Hg) and at room temperature (approximately 25° C). When tests are made with atmospheric pressure or room temperature differing materially from the above values, proper allowance shall be made for the difference from the specified conditions.

4.5.2 Tapping. Except where otherwise specified, the indicator shall be gently tapped or vibrated before a test reading is taken.

4.5.3 Vibration. Unless otherwise specified, the indicator shall be subjected to circular vibration in a plane inclined 45 degrees to the horizontal plane. The vibration shall be within a frequency range of 5 to 50 Hz and at amplitudes within 0.009 to 0.020 inch.

4.5.4 Attitude. Unless otherwise specified, the indicator shall be tested in its normal operating position (dial surface shall be held in vertical plane).

4.5.5 Test voltage. Unless otherwise specified, voltages noted herein are alternating current root-mean-square values. The voltmeter used to measure voltages shall be of a type which is free from frequency errors.

4.6 Test Methods.

4.6.1 Examination of product. Each indicator shall be inspected to determine compliance with the requirements specified herein with respect to materials, workmanship, proper operation, and performance.

4.6.2 Room-temperature starting. The indicator shall be connected to a variable-frequency power supply. The supply voltage shall be 0.0035 times the frequency in CPM. The frequency of the supply shall be increased from zero CPM up to but not exceeding 150 CPM. The indicator may be gently tapped or vibrated and a reading made from the indicator. The reading shall be not less than 2.5 percent RPM.

4.6.3 Scale error at room temperature. The indicator shall be connected as shown on figure 2 to a generator conforming to Specification MIL-G-9398 or MIL-G-26611 and tested at points of the scale indicated in either table I or table II. The test shall be made either by driving the generator at a speed to produce the specified

Downloaded from http://www.everyspec.com

indicator readings and reading the speed of the generator or by driving the generator at the specified speeds and reading the indicator. The test shall be made with speeds increasing, then with speeds decreasing. With speeds increasing, the speed shall be brought up to but shall not exceed the speed specified to give the desired reading, and with speeds decreasing, the speed shall be brought down to but shall not fall below the speed specified to give the desired reading.

4.6.3.1 Scale error tolerance. The errors at the test points shall not exceed the tolerances specified in the applicable table. When the speed is held constant at any point of the scale, the pointer shall not oscillate over a range greater than 0.5 percent from 0 to 15 percent and 0.3 percent from 15 to 100 percent as indicated on the indicator.

4.6.3.2 Test setup. In accomplishing the tests specified for the scale error test, two single indicators shall be connected to and operated from one tachometer generator.

4.6.4 Friction error.

4.6.4.1 Friction error tolerances. The indicator shall be set at 5-, 20-, 40-, 70-, 85-, and 100- percent graduations, or at generator speeds 200, 800, 1,600, 3,200, 3,600, and 4,200 RPM, whichever the contractor finds more convenient. After each setting, the indiator shall be tapped and the change in indications noted. This change shall not exceed 1.5 percent at the 5-percent graduation, 0.7 percent at the 20-percent graduation, and 0.5 percent at the 40-, 70-, 85-, and 100-percent graduations.

4.6.5 Position error. The indicator shall be operated at 100 percent with the indicator in the normal (dial vertical) position. The indicator reading shall be noted. The maximum deviation from the normal position reading, when tested in the following positions, shall not exceed 0.3 percent:

(a) Rotated from normal position through 45 degrees to the rear (dial tilted 45 degrees back from vertical position).

(b) Rotated from normal position through 45 degrees to the front (dial tilted 45 degrees forward from vertical position).

(c) Rotated from normal position through 45 degrees to the right (dial vertical).

(d) Rotated from normal position through 45 degrees to the left (dial vertical).

4.6.6 Pointer alignment. On indicators with a subdial, the indicator shall be operated so the main pointer will indicate 90 and 96 percent RPM, respectively. The subdial pointer shall then correspondingly indicate 0 and 6, respectively, within 0.20 percent.

4.6.7 Sealing. The instrument case shall be tested for leaks by means of a mass spectrometer type of helium leak detector. Where a nitrogen-helium mixture is utilized as the filling medium, the detected leak rate shall not exceed 0.01 micro cubic foot per hour at a pressure differential of one atmosphere. Where 100 percent-helium is utilized as the filling medium, the leak rate shall not exceed 0.1 micro cubic foot per hour.

Downloaded from http://www.everyspec.com

4.6.8 Precipitation. The indicator shall be placed in a chamber, the air temperature of which is controllable. The temperature of this circulating air shall be 85° ±5° C and the indicator shall be kept in this chamber for a minimum of 2 hours. The indicator shall then be removed from the high temperature chamber and within 30 seconds the indicator face shall be immersed to a depth of 1 to 2 inches in a fluid bath maintained at 0° to 5° C. After 5 minutes, the indicator shall be removed from the fluid bath and dried. There shall be no evidence of moisture or other deposits on the inner face of the cover glass.

4.6.9 Fogging. The indicator shall be energized and placed in a 70° ±2° C controlled ambient for a minimum of 1 hour. At the end of this period and while still at this temperature, an ice cube shall be rubbed on the indicator glass face from 1 to 2 minutes. The glass shall be wiped dry (do not use compressed air) and the indicator inspected for evidence of water or oil fog. Evidence of fogging shall be cause for rejection. This test may be done in conjunction with the high temperature scale error and friction test.

4.6.10 Low-temperature starting. Prior to this test, the room temperature scale error test shall be repeated. The indicator shall then be placed in a chamber, the temperature of which is controllable. The temperature of the circulating air shall be reduced to -54° ±2° C and held at this temperature for the duration of the test. The indicator shall be kept in the chamber for at least 4 hours after the temperature of -54° ±2° C is reached before the test is started. No voltage shall be applied to the indicator terminals during this period.

4.6.10.1 Starting test. The indicator shall be connected to a variable-frequency power supply. The voltage of the supply shall be equal to 0.004 times the frequency in CPM. The frequency of the supply shall be increased from zero CPM up to and not exceeding 150 CPM. The indicator may be gently tapped or vibrated. The indicator reading shall be not less than 2.5 percent RPM.

4.6.11 Scale error at -54° C. Following the starting test at low temperature and while still at -54° C, the indicator readings at the points indicated by footnote 1/ in tables I and II shall be determined in the same manner as specified in 4.6.3. The errors at the test points shall not exceed the tolerances specified in the applicable table.

4.6.12 Scale error at -35° C. The indicator readings shall be determined as specified in the scale error test at -54° C, except that the temperature of the air in the chamber shall be -35° ±2° C. The indicator shall be kept at -35° ±2° C at least 2 hours prior to the test. The errors at the test points shall not exceed the tolerances specified in the applicable table.

4.6.13 Scale error -5° C. The indicator readings shall be determined as specified in the scale error test at -54° C, except that the temperature of the air in the chamber shall be -5° C. The indicator shall be kept at -5° ±2° C at least 2 hours prior to the test. The errors at the test points shall not exceed the tolerance specified in the applicable table.

4.6.14 Scale error at high temperature. The indicator scale readings shall be determined as specified in the indicator scale error test at -54° C, except that the temperature of the air in the chamber shall be +71° ±2° C. The indicator shall be kept in the chamber for 4 hours after the temperature of +71° C is reached before the test is started. The errors at the test points shall not exceed the tolerances specified in the applicable table.

Downloaded from http://www.everyspec.com

4.6.15 Dielectric strength. The insulation shall be tested by connecting a test voltage of 400V at a commercial frequency for a minimum period of 5 seconds between any of the connector pins and any metal part of the case or electrical connector shell. There shall be no dielectric breakdown of insulation as a result of this test.

4.6.16 Magnetic effect. The indicator, first not operating and second operating at an indication of approximately 90 percent RPM, shall be rotated in a vertical plane about a short bar magnet compass with the nearest part of the indicator 5.50 inches from and magnetically east or west of the center of the compass. Starting directly under the compass, the indicator shall be held in positions 0 degree, 45 degrees, 90 degrees, 135 degrees, 180 degrees, 225 degrees, 270 degrees, and 315 degrees from the initial positions. At each of these positions, the indicator shall be rotated on its own horizontal axis until it is in its norman upright position. The horizontal magnetic field intensity shall be 0.17 to 0.19 oersted. The deflection of the compass at any of the specified positions shall not exceed 3 degrees.

4.6.17 Vibration error. The indicator reading shall be determined when the generator is operated at a point between 60 and 90 percent RPM as selected by the Inspector. The indicator shall then be subjected to circular vibration as specified under test conditions at an amplitude of 0.009 to 0.011 inch diameter. The indicator reading shall be determined with the generator operating at the original speed as the vibration frequency is varied from 5 to 50 Hz. The readings with vibration shall vary not more than 0.7 percent from the readings without vibration. The amplitude of the pointer oscillation shall not exceed 0.7 percent.

4.6.18 Indicator current. The indicator shall be tested using a 21V, 4,200 CPM supply to determine that the current drawn by any one of the 3-phase windings does not exceed 0.30 ampere.

4.6.19 Low-temperature exposure. The room-temperature scale error test for increasing speeds only shall be repeated. The indicator shall then be subjected to a temperature of -62° ±2° C for a period of 48 hours. After the chamber has returned to room termperature and the indicator has remained at room temperature for a minimum period of 4 hours, it shall be subjected to and meet the requirements of the scale error test at room temperature (4.6.3), increasing speeds only, and the friction test (4.6.4). There shall be no damage which would adversely affect subsequent operation.

4.6.20 High-temperature exposure. The indicator shall be placed within a chamber and the internal temperature of the chamber raised to 71° ±2° C with an internal relative humidity of not more than 5 percent. The source of heat for the chamber shall be arranged in such a manner that radiant heat shall not fall upon the test specimen. The total volume occupied by a single item of equipment or by several items shall not exceed 50 percent of the internal volume of the test chamber. The indicator shall be maintained at 71° ±2° C for a period of 24 hours. While still at this temperature, the indicator shall be operated throughout its range, for increasing speeds only, without exhibiting sticking or erratic characteristics. After the chamber has returned to room temperature for a minimum period of 4 hours, it shall be subjected to and meet the requirements of the scale error at room temperature test (4.6.3), increasing speeds only, and the friction test (4.6.4). There shall be no damage which would adversely affect subsequent operation.

4.6.21 Vibration failure. The indicator shall be mounted on the vibration stand in its normal operating position. The test shall be conducted while the indicator is being operated at an indication of approximately 50 percent. The indicator shall be

Downloaded from http://www.everyspec.com

subjected to vibration with a circle diameter between 0.018 and 0.020 inch for a 3-hour period. The frequency shall be varied uniformly from 5 to 50 Hz and return once each hour during this test. After the 3-hour period, the indicator shall be subjected to the scale error at room temperature test (4.6.3), increasing speeds only. The readings shall not differ from the readings before vibration by more than 0.5 percent. In addition, no looseness in the mechanism or damage to any part of the instrument shall result from this test.

4.6.22 Overspeed and reverse operation. One or two of the indicator mechanisms shall be electrically connected to a tachometer generator. The reading of the indicators shall be determined when operated at 20 and 90 percent RPM. The indicators shall be at room temperature and the readings shall be taken before the indicators have attained an appreciable temperature rise.

4.6.22.1 Overspeed and reverse test. The generator and indicators shall then be operated, first at a generator shaft speed of approximately 5,000 RPM for a period of 5 minutes, and then in the reverse direction of rotation at a generator drive shaft speed of approximately 2,500 RPM for a period of 1 minute.

4.6.22.2 Tolerances for overspeed and reverse operation. After the indicators have been allowed to cool to room temperature, the readings of the indicator shall again be determined when operated at 20 and 90 percent RPM. The change in indicated speed at the respective scale points before and after the overspeed test shall be not more than 0.5 percent.

4.6.23 Indicator endurance. The readings of the indicator shall be determined when operated at 20 and 90 percent RPM. The indicator shall be at room temperature and the readings shall be taken before the indicator has attained an appreciable temperature rise. The indicator shall then be operated at an indication of 90 $\pm$5 percent RPM for a period of 12,000 hours. The voltage shall be measured at the indicator terminals and shall be 18.5 $\pm$1V during the 1,000-hour period. At the end of the 1000 hour period and after the indicator has been allowed to cool to room temperature, the readings of the indicator shall again be determined when operated at 20 and 90 percent RPM. The change in reading obtained before and after this test shall be not more than 0.5 percent. No screws or other parts shall become loose or damaged as a result of this test. Indicators which have been subjected to all the tests of this specification up to and including this test shall also be subjected to the scale error at room temperature, friction, and position error tests (4.6.3, 4.6.4, and 4.6.5, respectively). Scale error shall be not more than 0.5 percent that allowed at room temperature in tables I and II. Friction error shall not exceed 1.5 percent at the 5- and 20-percent graduations and 1.0 percent at the 40-, 70-, 85-, and 100-percent graduations. Position error shall not exceed 0.5 percent.

4.6.24 Thermal shock. The indicator shall be subjected to four cycles of exposure to water at 85° $\pm$2° C and 5° $\pm$2° C without evidence of moisture penetration or damage to coating or enclosures. Each cycle of the test shall consist of immersing the indicator in water at 85° C for a period of 30 minutes and then within 5 seconds of removal from the bath, the indicator shall be immersed for a period of 30 minutes in the other bath maintained at 5° C. This cycle shall be repeated continuously, one cycle following the other, until four cycles have been completed. Following this test, the indicator shall be subjected to the sealing test (4.6.7). No indicator leakage shall occur as a result of this test.

4.6.25 Salt fog. The indicator shall be subjected to a salt fog test in accordance with MIL-STD-810C, Method 509.1 for a period of 50 hours. External connections shall be made to the indicator in such a manner as to simulate installed conditions.

Downloaded from http://www.everyspec.com

Following this test, the indicator shall be examined and there shall be no evidence of external corrosion or deterioration which will affect subsequent operation. The indicator shall then be subjected to the dielectric test (4.6.15) and sealing test (4.6.7). The external surface of the indicator may be washed with distilled water and air-dried prior to conduction of the dielectric test.

4.6.26 Internal examination. The indicator shall be examined internally for evidence of corrosion or deterioration resulting from the tests specified herein. There shall be no evidence of corrosion or deterioration.

4.7 Packaging, packing, and marking. Preparation for delivery shall be examined for conformance to section 5.

5. PACKAGING.

5.1 Preservation. Preservation shall be level A, C, or Industrial, IAW MIL-STD-2073/1A, as specified (see 6.2).

5.1.1 Level A.

5.1.1.1 Cleaning. Indicators shall be cleaned in accordance with process C-1 of MIL-P-116.

5.1.1.2 Drying. Indicators shall be dried in accordance with process D-4 of MIL-P-116.

5.1.1.3 Preservation application. Preservative shall not be used.

5.1.1.4 Unit packaging. Unless otherwise specified by the contracting activity, each indicator shall be packaged in quantity unit packs of one each in accordance with Method IC-1 of MIL-P-116. Each indicator shall be placed in a PPP-B-636 Fiberboard container weather resistant, with sufficient cushioning material between bag and unit container of a type, exceed peak values in G's established for the indicator when completed packs are subjected to the rough handling drop tests of MIL-P-116.

5.1.2 Level C. Each indicator shall be clean, dry, and individually packaged in a manner that will afford adequate protection against corrosion, deterioration, and physical damage during shipment from supply source to the first receiving activity.

5.1.3 Industrial. The Industrial preservation of indicators shall be in accordance with ASTM D3951.

5.2 Packing. Packing shall be level A, B, C, or Industrial as specified (see 6.2).

5.2.1 Level A. Indicators packaged as specified in 5.1.1 shall be packed in shipping containers conforming to PPP-B-601, Styles A or B, Class overseas, unless otherwise specified by the contracting activity. Insofar as practical, exterior shipping container shall be of uniform shape, size, minimum tare and cube consistent with the protection required.

5.2.2 Level B. Indicators packaged as specified in 5.1.1 shall be packed in shipping containers conforming to PPP-B-636, class weather-resistant, unless otherwise specified by the contracting activity. Other requirements as specified in 5.2.1 apply.

Downloaded from http://www.everyspec.com

5.2.3 Level C. Packing shall be applied which affords adequate protection during domestic shipment from the supply source to the first receiving activity for immediate use. This level shall conform to applicable carrier rules and regulations.

5.2.4 Industrial. The packaged indicator shall be packed in accordance with ASTM D3951.

5.3 Marking. In addition to any other markings required by the contract or order (see 6.2), interior and exterior containers shall be marked in accordance with MIL-STD-129.

6. NOTES

6.1 Intended use. The tachometer indicator covered by this specification is intended for use to indicate the rotational speed of a jet or prop-jet engine in percent RPM. The calibration is based on the generator's turning 4,200 RPM at 100-percent rated engine speed.

6.2 Acquisition requirements. Acquisition documents must specify the following:

(a) Title, number, and date of this specification
(b) Issue of DODISS to be cited in the solicitation, and if required, the specific issue of individual documents referenced (2.1).
(c) Whether sampling plan B is to be omitted (see 4.4.2.2).
(d) Applicable level of preservation, packaging, and packing (see 5.1).
(e) Dial finish requirements if other than as specified in 3.9.1.
(f) Reinspection date requirements (see 5.2.1).

6.3 Definitions.

6.3.1 Tapping. The phrase "gently tapped" means the application of a light vibration sufficient to overcome that amount of residual friction normally associated with good quality aircraft instruments.

6.3.2 Hermetic seal. A hermetic seal is a perfectly closed and airtight seal made between vitric or metallic materials, or both. A hermetic seal is not intended to include seals accomplished by gaskets.

6.3.3 Amplitude. The word "amplitude" means the extent of motion as measured from one extreme to the opposite extreme.

6.4 Qualification. With respect to products requiring qualification, awards will be made only for such products as have, prior to the time set for opening of bids, been tested and approved for inclusion in the applicable Qualified Products List whether or not such products have actually been so listed by that date. The attention of the suppliers is called to this requirement, and manufacturers are urged to arrange to have the products that they propose to offer to the Federal Government tested for qualification, in order that they may be eligible to be awarded contracts or orders for the products covered by this specification. The activity responsible for the Qualified Products List is the Oklahoma City Air Logistics Center/MMEOR, Tinker AFB, Ok 73145-5990, and information pertaining to qualification of products may be obtained from that activity.

6.5 Subject term (key word listing).

Downloaded from http://www.everyspec.com

Aircraft Turbo Speed
Indicator
Tachometer MU-1
0-110 Percent RPM
2-Inch Size

6.6 International standardization agreement. Certain provisions of this specification are the subject of international standardization agreement STANAG 3691 and ASCC 10/36. When amendment, revision or cancellation of this specification is proposed which will modify the international agreement concerned, the preparing activity will take appropriate action through international standardization channels including departmental standardization offices to change the agreement or make other appropriate accommodations.

6.7 Changes from previous issue. Marginal notations are not used in this revision to identify changes with respect to the previous issue due to the extensiveness of the changes.

Custodians:
AIR FORCE -99
NAVY -AS

Review activities:
AIR FORCE -11, 80

Preparing activity:
AIR FORCE -71

Project No:
6620-0469

Downloaded from http://www.everyspec.com

STANDARDIZATION DOCUMENT IMPROVEMENT PROPOSAL

INSTRUCTIONS

1. The preparing activity must complete blocks 1, 2, 3, and 8. In block 1, both the document number and revision letter should be given.
2. The submitter of this form must complete blocks 4, 5, 6, and 7.
3. The preparing activity must provide a reply within 30 days from receipt of the form.

NOTE: This form may not be used to request copies of documents, nor to request waivers, or clarification of requirements on current contracts. Comments submitted on this form do not constitute or imply authorization to waive any portion of the referenced document(s) or to amend contractual requirements.

I RECOMMEND A CHANGE:	1. DOCUMENT NUMBER MIL-I-25623B	2. DOCUMENT DATE (YYMMDD)

3. DOCUMENT TITLE

4. NATURE OF CHANGE *(Identify paragraph number and include proposed rewrite, if possible. Attach extra sheets as needed.)*

5. REASON FOR RECOMMENDATION

SUBMITTER		
NAME *(Last, First, Middle Initial)*	b. ORGANIZATION	
ADDRESS *(Include Zip Code)*	d. TELEPHONE *(Include Area Code)* (1) Commercial (2) AUTOVON *(If applicable)*	7. DATE SUBMITTED (YYMMDD)

PREPARING ACTIVITY		
NAME	b. TELEPHONE *(Include Area Code)* (1) Commercial	(2) AUTOVON
ADDRESS *(Include Zip Code)*	IF YOU DO NOT RECEIVE A REPLY WITHIN 45 DAYS, CONTACT: Defense Quality and Standardization Office 5203 Leesburg Pike, Suite 1403, Falls Church, VA 22041-3466 Telephone (703) 756-2340 AUTOVON 289-2340	