MIL-H-8796C
17 May 1965
SUPERSEDING
MIL-H-8796B
27 December 1960

MILITARY SPECIFICATION

HOSE, AIR DUCT, FLEXIBLE, AIRCRAFT

This specification has been approved by the Department of Defense and is mandatory for use by the Departments of the Army, the Navy, and the Air Force.

1. SCOPE

1.1 Scope - This specification covers lightweight, circular cross-sectional flexible airduct hose, fabricated from laminated fabric reinforced plastics, or laminated fabric reinforced synthetic rubbers, to be used in aircraft air-conditioning and anti-icing systems.

1.2 Classification - Airduct hose furnished under this specification shall be of the following types and classes, as specified (see 6.2):

Type I	- 8 PSI Rated Operating Pressure
Type II	- 16 PSI Rated Operating Pressure
Type III	- 35 PSI Rated Operating Pressure
Type IV	- 50 PSI Rated Operating Pressure
Type V	-100 PSI Rated Operation Pressure
Class 1	-65° to 160° F. Operating Temperature Range
Class 2	-65° to 300° F. Operating Temperature Range
Class 3	-65° to 500° F. Operating Temperature Range
Class 4	-75° to 600° F. Operating Temperature Range

2. APPLICABLE DOCUMENTS

2.1 The following documents, of the issue in effect on date of invitation for bids, form a part of this specification to the extent specified herein:

SPECIFICATIONS

Federal

P-D-680 Solvent; Dry-Cleaning

FSC 1660

SPECIFICATIONS (Continued)

Federal

QQ-A-250/4	Aluminum Alloy, Plate and Sheet 2024
QQ-W-423	Wire, Steel, Corrosion-Resisting
QQ-B-613	Brass, Leaded and Nonleaded; Plate, Rolled Bar, Sheet and Strip
CCC-T-191	Textile Test Methods

Military

MIL-P-116	Preservation, Methods of
TT-S-735	Standard Test Fluids Hydrocarbon
MIL-E-5272	Environmental Testing, Aeronautical and Associated Equipment, General Specification for
MIL-P-5425	Plastic, Sheet, Acrylic, Heat Resistant
MIL-F-5566	Fluid; Anti-Icing (Isopropyl Alcohol).
MIL-L-5606	Hydraulic Fluid, Petroleum Base, Aircraft and Ordnance
MIL-J-5624	Jet Fuel, Grades JP-3, JP-4, and JP-5.
MIL-L-6082	Lubricating Oil; Aircraft Reciprocating (Piston) Engine
MIL-L-6085	Lubricating Oil, Instrument, Aircraft, Low Volatility
MIL-L-7808	Lubricating Oil, Aircraft Turbine Engine, Synthetic Base
MIL-P-7936	Parts and Equipment, Aeronautical, Preparation for Delivery
MIL-T-9107	Test Reports; Preparation of
MIL-T-23699	Lubricating Oil, Aircraft Turboprop and Turboshaft Engines, Synthetic Base
MIL-D-70327	Drawings, Engineering and Associated Lists

STANDARDS

Federal

Fed. Test Method Std. No. 151	Metals; Test Methods

Military

MIL-STD-105	Sampling Procedures and Tables for Inspection by Attributes
MIL-STD-130	Identification Marking of U.S. Military Property
MS33660	Tubing End, Hose Connection, Standard Dimensions for

Publications

Air Force - Navy Aeronautical Bulletin No. 438	Age Controls of Age Sensitive Elastomeric Items

(Copies of specifications, standards, drawings, and publications required by contractors in connection with specific procurement functions should be obtained from the procuring activity or as directed by the contracting officer.)

3. REQUIREMENTS

3.1 Preproduction - The flexible airduct hose furnished under this specification shall be a product which has been inspected and has passed the preproduction tests specified herein.

3.1.1 Waiver - Preproduction testing will not be required for airduct hose identical in type, class, material, construction, and diameter to hose which previously has been subjected to preproduction testing of this specification and accepted. A copy of the certified test report on the previous preproduction testing and evidence of acceptance will be acceptable in lieu of rerunning preproduction tests. This waiver may be cancelled or revoked at any time by the procuring activity.

3.2 Materials - The materials shall consist of a suitable fabric, such as cotton, linen, fortisan, and glass fibers suitably impregnated with a thermosetting-type resin or synthetic rubber, properly cured to produce a product adequate in all respects to conform to this specification. Plastic resins, which

are not resistant to the growth of fungus, shall not be used. Materials shall contain no substance which is injurious to the skin or which emits toxic or unpleasant odors when in use throughout the specified operating temperature range of the hose. Reinforcing wire shall be corrosion resisting steel, hard drawn wire in accordance with QQ-W-423, Composition 302, Condition 3, Form I.

3.3 Design and construction - The hose shall be constructed in one of the following forms as necessary to conform to the applicable type and class specified in 1.2:

(a) Fully or partially circumferentially convoluted, no wire reinforcement.

(b) Helical convoluted, no wire reinforcement.

(c) Helical or circumferential convoluted, wire reinforced.

The hose shall have a smooth internal surface to minimize flow losses. Hose shall be axially retractable to at least 75% of its normal free length.

3.3.1 Reinforcement - Wire reinforcement, conforming to 3.2, shall be helically wound spring, secured to the hose in a partially contracted condition so as to hold the hose normally in an extended position. The free length diameter of the spring coil shall be such that when the coil is stretched to the length of the fully extended hose the diameter of the coil will be the same as the hose diameter. The ends of the helical spring wire shall be secured in a reinforced portion of the hose material in a manner which will conform to 3.3.2.

3.3.2 End Couplings - Unless otherwise specified, each length of hose shall be provided with a coupling at each end. The coupling shall be of the soft end type. Soft ends shall consist of an added sleeve or cuff of essentially the same material as the body of the hose. The wire shall be removed from that portion of the hose covered by the cuff, and the tension relieved on the end of the wire helix to prevent tearing or distortion of the hose at the wire terminus. The inner lining of the hose shall be extended to serve as a reinforcement for the entire length of the coupling. The soft ends shall have sufficient resilience to allow a snug fit over a tubing end hose connection conforming to type A of MS33660 having an outside diameter (OD) equal to the nominal inside hose diameter.

3.4 Hose Lengths - The increment of length for hose shall be 1/2 inch. Hose length shall be measured exclusive of the end couplings when the hose is in the normal free length position. Tolerance on length is ±1/8 inch or 1%, whichever is greater.

3.5 Minimum Bend Radius - Types I and II hose shall have a minimum inside bend radius of not more than the hose diameter when a suitable length of hose is bent to form a 180-degree bend. Types III through V hose shall have a minimum inside bend radius of not more than 3 diameters when a suitable length of hose is bent to form a 180-degree bend. For all types, when so bent, there shall be no evidence of collapse, and the maximum decrease in cross sectional area shall not exceed 5 percent of the normal area.

3.6 Leakage - Permissible leakage at the operating pressure shall not exceed the following, when tested as specified in 4.5.3:

Class 1 and 2 - 0.02 CFM/IN. DIA./FT. LENGTH
Class 3 and 4 - 0.06 CFM/IN. DIA./FT. LENGTH

3.7 High Temperature - Hose, when exposed to applicable maximum temperature and applicable operating pressure specified in 1.2, shall show no evidence of rupture, delamination or cracking when tested as specified in 4.5.4.

3.8 Endurance - There shall be no evidence of rupture, delamination, cracking or other failure after the hose has been tested as specified in 4.5.5.

3.9 Proof Pressure - Hose, when exposed to twice the applicable operating pressure specified in 1.2, shall show no evidence of rupture, delamination, cracking, collapse or permanent distortion when tested as specified in 4.5.6.

3.10 The hose shall withstand external pressures of 3 PSI without deformation or collapse.

3.11 Vibration Resistance

3.11.1 At Low-Temperature - The hose, when exposed to the minimum temperature specified in 1.2, shall show no evidence of rupture, delamination, cracking, or permanent distortion from vibration when tested as specified in 4.5.8.1.

3.11.2 At High Temperature - The hose, when exposed to the maximum temperature specified in 1.2, shall show no evidence of rupture, delamination, cracking, or permanent distortion from vibration when tested as specified in 4.5.8.2.

TABLE I

TEST FLUIDS

Fluids	Specifications	Classes of Hose to be Tested
Hydrocarbon	TT-S-735, Types I and II	1 and 2 only
Anti-icing	MIL-F-5566	All
Hydraulic	MIL-H-5606	All
Fuel	MIL-J-5624, Type JP-4	All
Lubricating oil, engine	MIL-L-6082	All
Lubricating oil, instrument	MIL-L-6085	All
Lubricating oil, aircraft turbine engine	MIL-L-7808 or MIL-L-23699	All

3.12 Solvents Resistance - The hose shall be resistant, internally as well as externally, to each of the fluids listed in table I and shall show no evidence of swelling, inner surface flaking, delamination, tackiness or a progressive softening of synthetic materials or surface finish when tested as specified in 4.5.9.

3.13 Water Resistance - Fresh and salt water spray shall cause no visible damage nor have any deleterious effects, such as corrosion or delamination, on the hose and spring material when tested as specified in 4.5.10.

3.14 Non-Corrosive Properties - There shall be no evidence of corrosion on aluminum or brass when the hose material is tested as specified in 4.5.11.

3.15 Plastic Crazing - The hose shall not craze methyl methacrylate when tested as specified in 4.5.12.

3.16 Flame Resistance - Airduct hose material shall continue to burn for no longer than 30 seconds after the source of the flame is removed, when tested as specified in 4.5.13. The average char length shall not exceed 3 inches.

3.17 Fungus Resistance - Airduct hose, when tested as specified in 4.5.14, shall not be nutrient for fungi.

3.18 Age Limitation - Age limitations shall be in accordance with ANA Bulletin No. 438.

3.19 Identification of Product - Each length of hose less than 3 feet in length shall be permanently and legibly marked with an oil-resistant marking fluid to show the manufacturer's name, quarter of the year, and year of manufacture, type, class, and specification number in accordance with MIL-STD-130. For continuous lengths greater than 3 feet, the marking shall be repeated every 3 feet.

3.20 Workmanship - Workmanship shall be of the quality necessary to produce hose conforming to the specification and shall be free from tears, holes, cuts, splits, loose or frayed fabric, and kinks or breaks in reinforcing wire.

3.21 Interchangeability - All parts having the same manufacturer's part number shall be functionally and dimensionally interchangeable. The drawing number requirements of MIL-D-70327 shall govern changes in the manufacturer's part number.

4. QUALITY ASSURANCE PROVISIONS

4.1 Responsibility for inspection - Unless otherwise specified in the contract or purchase order, the supplier is responsible for the performance of all inspection requirements as specified herein. Except as otherwise specified, the supplier may utilize his own facilities or any commercial laboratory acceptable to the Government. The Government reserves the right ot perform any of the inspections set forth in the specifications where such inspections are deemed necessary to assure supplies and services conforming to prescribed requirements.

4.2 Classification of Tests - The inspection and testing of hose shall be classified as follows:

(a) Preproduction tests (4.3)

(b) Quality Conformance Test (4.4)

4.3 Preproduction Tests - The preproduction tests of hose shall consist of all tests of this specification as specified under 4.5.

4.3.1 Sampling Instructions - Preproduction test samples shall consist of appropriate lengths of hose (see 4.3.2) of the type, class, and size on order, representative of the production hose and shall be tested in a place and manner designated in the contract, purchase order, or invitation for bids.

4.3.2 Preproduction Testing - Preproduction test samples of hose shall be subjected to examination (4.5.1) and all other tests specified under 4.5 in the following manner:

(a) Two (2) samples shall be subjected to the following tests in the order listed:

(1)	Minimum Bend Radius	(4.5.2)
(2)	Leakage	(4.5.3)
(3)	High Temperature and Pressure	(4.5.4)
(4)	Leakage	(4.5.3)
(5)	Non-Corrosive Properties	(4.5.11)

(b) Two (2) samples shall be subjected to the following tests in the order listed:

(1)	Leakage	(4.5.3)
(2)	Proof Pressure	(4.5.6)
(3)	External Pressure	(4.5.7)
(4)	Leakage	(4.5.3)
(5)	Plastic Crazing	(4.5.12)

(c) One (1) sample shall be subjected to the following tests in the order listed:

(1)	Leakage	(4.5.3)
(2)	Endurance	(4.5.5)
(3)	Leakage	(4.5.3)
(4)	Flame Resistance	(4.5.13)

(d) Two (2) samples shall be subjected to the following tests in the order listed:

(1)	Leakage	(4.5.3)
(2)	Vibration Resistance	(4.5.8)

(3) Leakage (4.5.3)
(4) Fungus Resistance (4.5.14)

(e) Seven (7) samples shall be subjected to the following tests in the order listed:

(1) Leakage (4.5.3)
(2) Solvent Resistance (4.5.9)
(3) Leakage (4.5.3)

(f) One (1) sample shall be subjected to the following tests in the order listed:

(1) Leakage (4.5.3)
(2) Water Resistance (4.5.10)
(3) Leakage (4.5.3)

4.4 Quality Conformance Tests -The quality conformance test shall consist of the following:

(a) Examination of product (4.5.1)
(b) Minimum Bend Radius (4.5.2)
(c) Leakage (4.5.3)
(d) Proof Pressure (4.5.6)
(e) Packaging and Packing (4.6.)

4.4.1 Lot - A lot of airduct hoses shall consist of all hose of the same type and class, material, construction, and size offered for delivery at one time.

4.4.2 Sampling - Random representative sample lengths shall be selected from each lot in accordance with the provisions of MIL-STD-105, inspection level S-4, acceptable quality level (AQL) 1.5.

4.5 Test Methods -

4.5.1 Examination of Product - Each sample shall be examined to determine compliance with the requirements of this specification with respect to material, design, surface finish, dimensions, age limitations, marking and workmanship.

4.5.2 Minimum Bend Radius - A suitable length of hose sample shall be bent to form a 180 degree bend with the inside bend radius as specified in 3.5. The hose in this position shall be inspected for conformance with the requirements of 3.5.

4.5.3 Leakage - Hose sample shall be plugged at one end and subject to the applicable operating pressure for a period of five minutes at ambient room temperature. Maximum permissible leakage rate shall be as specified in 3.6.

4.5.4 High Temperature - A sample of hose, which has undergone no test except the leakage test, shall have air at the maximum applicable temperature (see 1.2) and the applicable pressure passed through it for a period of 72 hours at a rate of flow of 8.0 ± 2 CFM. Pressure and temperature in the sample shall be maintained within 3% of the specified value. The ambient temperature shall be room temperature.

4.5.5 Endurance - A sample of the finished hose which meets the leakage requirement shall be so mounted that its longitudinal axis bends midway in its length to form an angle as shown in figure 1a.

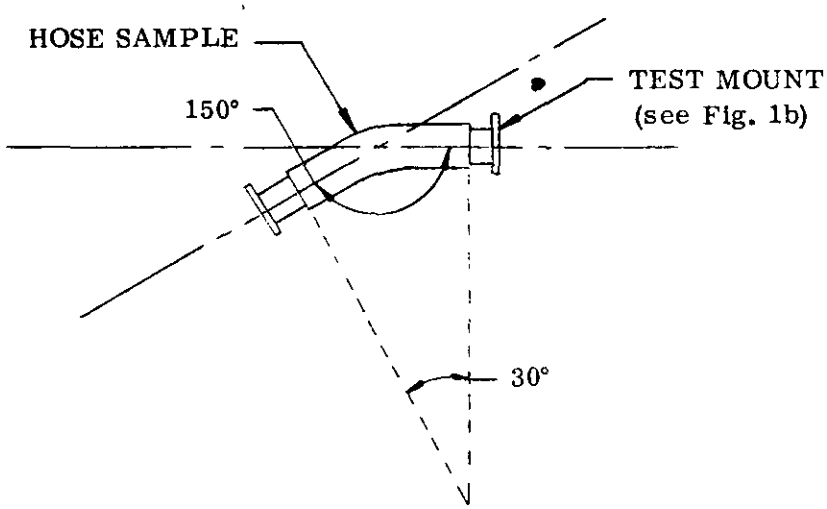

Figure 1a. Typical Hose Endurance Test Setup

The test equipment supporting the hose sample under test shall be rigidly fixed so that there can be no motion of the test mounts. The test mounts shall consist of metal tubes, of sufficient length to accommodate the cuffs of the sample and the hose clamps. The tubes shall be fixed to vertical metal plates, as shown in figure 1b.

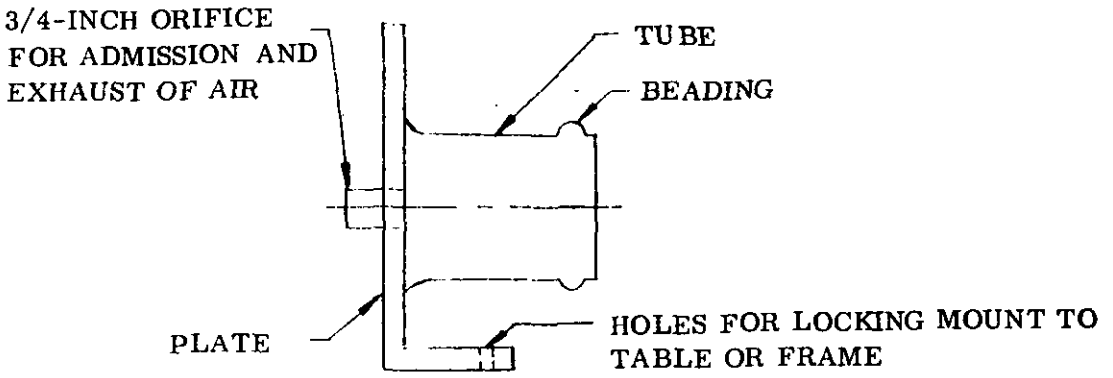

Figure 1b. Typical Endurance Test Mount

Tube ends shall conform to MS 33660, Type A of the applicable hose diameter. The orifice in the vertical plate for admission or exhaust of air shall be capable of being capped or plugged. Air at the maximum temperature applicable to the class of the sample under test shall be introduced into the sample and raised to the applicable operating pressure (see 1.2). The pressure shall be regulated by a relief valve situated at the opposite end of the sample to that at which the air is admitted. Pressure shall be maintained for 10 seconds, at which time the admitting valve shall close and an exhaust valve at the same end of the tube shall open and remain open for 2 seconds, allowing the escape of the air under pressure. The exhaust valve shall be sufficiently large to reduce air pressure in the hose, in the 2 second open period, from the maximum permitted by the relief valve to the ambient pressure, or to the ambient pressure, with a tolerance of +10% of the maximum test pressure. This operation (10 seconds on, 2 seconds off) shall constitute one cycle. Hose samples conforming to Classes 1 and 2 shall be subjected to 1500 cycles. Hose samples conforming to Classes 3 and 4 shall be subjected to 2000 cycles.

4.5.6 Proof Pressure -

(a) High Temperature - The hose sample shall be mounted in a straight-line position on test mounts similar to the mount shown in Figure 1b. The mounts shall be rigidly fixed with respect to each other, so that the hose under test can neither lengthen or contract, and one mount shall be plugged. Air at the maximum applicable temperature (see 1.2), shall be introduced through the other mount, and the pressure raised to twice the applicable operating pressure (see 1.2). The sample shall be held at this pressure for five minutes. The drop in temperature of the air under pressure in the hose shall not exceed 10% of the specified maximum temperature. There shall be no evidence of failure as specified in 3.9.

(b) Low Temperature - The mounted hose sample tested in (a) above, shall be allowed to return to ambient temperature. After which it shall be placed in a cold chamber and the temperature reduced to the minimum applicable temperature (see 1.2). The hose sample shall be exposed to the applicable low temperature for two hours, after which air at room temperature shall be introduced into the sample and the pressure increased to twice the applicable operating pressure (see 1.2). This pressure shall be maintained for five minutes. There shall be no evidence of failure as specified in 3.9.

4.5.7 External Pressure - Using the same test mounts and hose sample as in 4.5.6, air shall be evacuated by means of a vacuum pump to the external pressure specified (see 3.10). The sample shall be held at this pressure for five minutes. The ambient temperature shall be room temperature. There shall be no evidence of failure as specified in 3.10.

4.5.8 Vibration Resistance -

4.5.8.1 At Low Temperature - A sample of the finished hose which meets the leakage requirement shall be mounted on and clamped to test mounts similar to the mount described in 4.5.5 and placed within a cold chamber. One test mount shall be rigidly fixed to the chamber. The other shall be firmly attached (through an insulated opening through the cold chamber) to a vibration exciter capable of variable vibration over a range extending from 5 CPS to 500 CPS. The mount attached to the vibration exciter shall be free to move in a single dimension only,

parallel to vibration impulses transmitted by the exciter. Thus mounted, the hose sample, shall be exposed to the applicable low temperature for two hours and then vibrated in accordance with Procedure XII of MIL-E-5272C.

4.5.8.2 At High Temperature - A sample of the finished hose which meets the leakage requirements shall be mounted on and clamped to test mounts in the manner described above. The hose and test mounts shall then be placed in an oven. Fixed in the oven in the manner the test mounts were installed in the cold chamber, the hose sample shall be exposed to the applicable maximum temperature for two hours, and the vibrated in accordance with Procedure XII of MIL-E-5272C.

4.5.9 Solvent Resistance - The fluids specified in Table I shall be applied to the outer and inner surfaces of hose sample which have met the leakage requirement. Each fluid shall be applied to a single hose sample. The solvent shall be applied to the entire hose in a thin film and allowed to dry at room temperature for 24 hours. This procedure shall be repeated 10 times.

4.5.10 Water Resistance - Two samples of the finished hose which meet the leakage requirement shall be subjected to the water resistance test of Method 811.1 of Federal Test Method Standard No. 151. The time of exposure shall be 50 hours. After thorough drying at room temperature, one hose sample shall be tested for leakage in accordance the leakage test specified in 4.5.3. The other sample shall be opened and examined for wire corrosion.

4.5.11 Non-Corrosive Properties - Two 1/2-inch by 2-inch strips shall be cut from samples of hose and placed between three metal plates. Two (2) of the plates shall be of one metal, and the third of another. Each plate shall be 2-inches by 2-inches by 1/8-inch in size. The hose material and the plates shall be sandwiched as shown in figure 1 so that both the outside and the inside hose material make contact with each metal. This is done by placing the saem metal on the top and bottom of the sandwich, the second metal in the center and the hose material between the metals so that the same surface of the hose material is uppermost. (see figure 2).

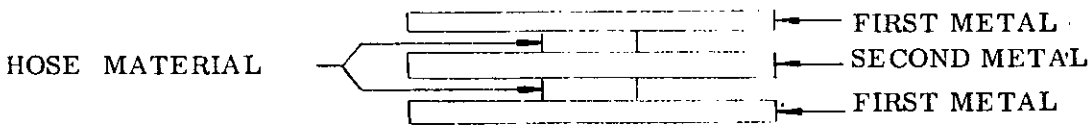

Figure 2. Typical Hose Material Corrosive Test Sandwich Setup

The sandwich shall be held in compression under a force of 40 to 50 LB./SQ. IN. for a period of 14 days in an atmosphere of 95% relative humidity and at a temperature of 100° ± 5° F. The metals used shall be as follows:

(a) Aluminum alloy; QQ-A-250/4

(b) Brass; QQ-B-613

In addition, four 1-inch by 6-inch strips of the finished hose material shall be used as slings to hold rods of the same two metals. Each rod shall be 3/8-inch in diameter and 1-1/2-inches long. The 1-inch by 6-inch strips of hose material shall be supported at either end, and the rod placed in the center of the strip as shown in figure 3.

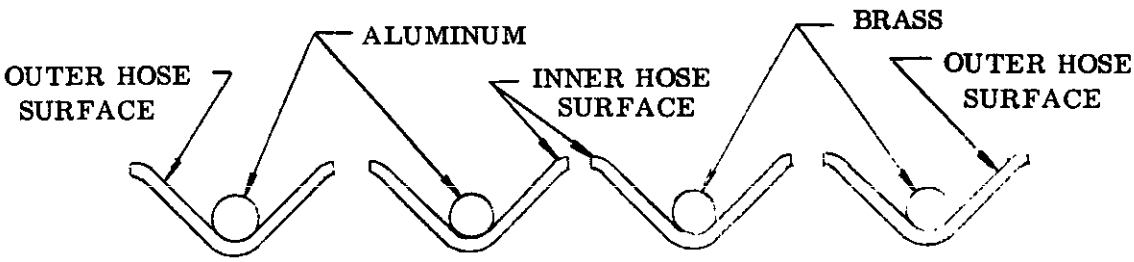

Figure 3. Typical Hose Material Corrosive Test Suspension Setup

The rods and hose material, assembled as shown, shall also be subjected to an atmosphere of 95% relative humidity and a temperature of 100° ± 5° F for 14 days. The metal, both plates and rods, shall be polished to a surface roughness of from 5 to 20 microinches rms finish. The edges of the plates and ends of the rods shall also be polished to reduce edge and end corrosion. The metal, both brass and aluminum in both rod and plate form, shall be cleaned and degreased as follows:

(a) Using clean gauze, swab metal with solvent conforming to P-D-680.

(b) Immerse in the solvent.

(c) Air Dry.

(d) Immerse in boiling 95% methanol.

At the termination of the test the surfaces of plates and rods which were in contact with the hose material shall be inspected for discoloration, deposits, pitting, etc. The appearance of such marks on the surface shall require the metal plate to be washed in solvent conforming to P-D-680. Any pits or eroded marks remaining after this process shall be construed to be corrosion. Discoloration or staining (marks which do not physically affect the surface of the plates and which wash or buff off easily) shall not be considered detrimental. If any doubt exists about the presence of pitting, erosion, or corrosion of the metal, a microscope of approximately 10 - to 15 - power magnification shall be used to determine the actual condition.

4.5.12 Plastic Crazing - A piece of sheet plastic conforming to finish A of MIL-P-5425 shall be set up as a cantilever beam as shown in figure 4. A one-inch by one-inch section of the finished hose shall be placed on the top (tension) side of the plastic specimen over the fulcrum. A shot bag, one-inch by two-inches in dimensions, and weighing 3 ounces, shall be placed upon the hose material sample. A load of 2500 PSI shall be applied to the cantilever beam as indicated in figure 4 for 48 hours. The examination for crazing shall be made after removal of the hose material and while the specimen is still under stress. The required loads shall be computed as follows:

$$P = \frac{Sbd^2}{6L}$$

P = Load in pounds

S = Stress in pounds per square inch = 2,500

L = Distance from fulcrum to load in inches = 4

b = Width of specimen in inches (measured to the nearest 0.001)

d = Thickness of specimen in inches (measured to the nearest 0.001)

All craze appearing at the edges of the specimen shall be disregarded unless they grow and extend 1/8 inch from either edge of the specimen.

4.5.13 Flame Resistance - A sample of hose shall be tested as specified in Method 5903-T of CCC-T-191 except that the rectangle (2-3/4 by 12-inches) of hose placed in the apparatus for testing shall be a section of the whole hose, including inner and outer surfaces and any intermediate fabrics or materials which form a part of the finished hose. Reinforcing wire may be removed if necessary.

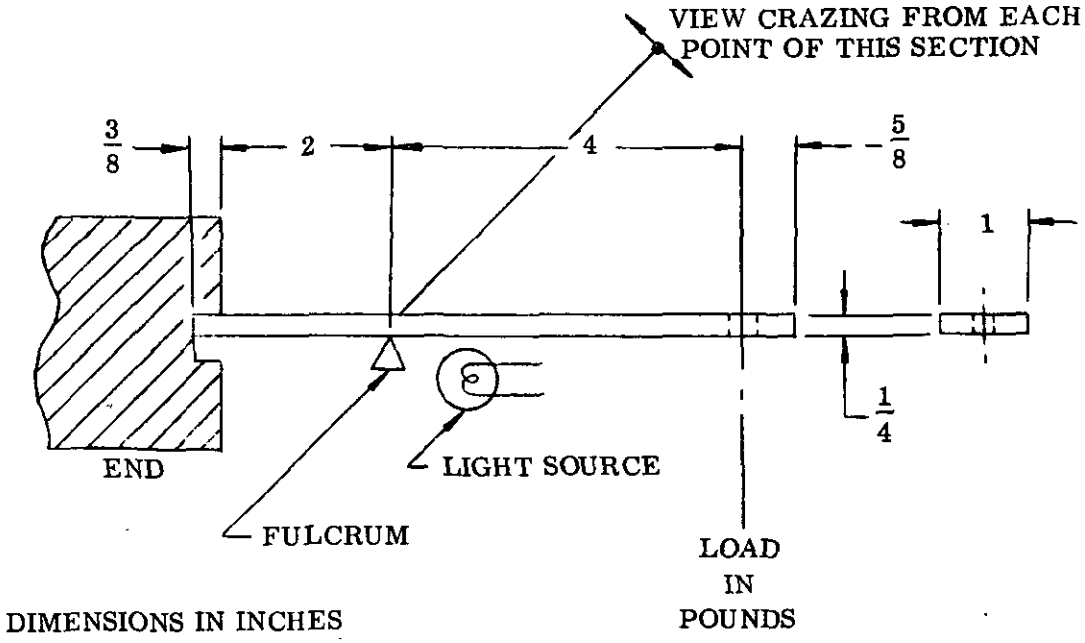

Figure 4. Stress Crazing Beam-Typical Test Setup

4.5.14 Fungus Resistance - Hose samples shall be tested for fungus resistance in accordance with Procedure I, MIL-E-5272.

4.6 Packaging, Packing, and Marking - Preparation for delivery shall be examined for conformance with section 5.

5. PREPARATION FOR DELIVERY

5.1 Packaging -

5.1.1 Levels A and C - The hose shall be unit packaged in accordance with MIL-P-7936. For level A the method of preservation shall be in accordance with Method III of MIL-P-116.

5.2 Packing -

5.2.1 Levels A, B, and C - The hose shall be packed in accordance with MIL-P-7936.

5.3 Marking of Shipments - Interior and exterior shipping containers shall be, marked in accordance with MIL-P-7936.

6. NOTES

6.1 Intended Use - Hose covered by this specification is intended for use in conducting pressurized, heated, and refrigerated air in aircraft air conditioning and anti-icing systems.

6.2 Ordering Data - Procurement documents should specify the following:

(a) Title, number, and date of this specification.

(b) Type and class (see 1.2).

(c) Length and size (diameter) of hose.

(d) Type of coupling, if other than specified in 3.3.2.

(e) Level of packaging and packing (see 5.1 and 5.2).

6.3 Age Definition - Inasmuch as the hose is dated by quarters of the year, it is necessary to judge its age in terms of time after the quarter and year of manufacture. Hose manufactured during the first quarter of any year will not become one quarter old until the end of the second quarter of that year.

6.4 Marginal indicia - The outside margins of this specification have been marked to indicate where changes, deletions, or additions from the previous issue have been made. This has been done as a convenience only and the Government assumes no liability whatsoever for any inaccuracies in these notations. Bidders and Contractors are cautioned to evaluate the requirements of this document based on the entire content as written, irrespective of the marginal notations and relationship to the last previous issue.

Custodians:

Navy - WP
Air Force - 11
Army - MO

Review Interest:

Navy - WP
Air Force - 11 and 71
Army - MO

Preparing Activity:

Navy - WP
Project No. 1660-0038

User Interest:

NOTICE: Review/user information is current as of date of this document. For future coordination of changes to this document, draft circulation should be based on the information in the current DODISS.

*U.S. GOVERNMENT PRINTING OFFICE: 1969-343-227/1254