Downloaded from http://www.everyspec.com

MIL-H-83772A (USAF)
1 November 1983
SUPERSEDING
MIL-H-83772 (USAF)
24 June 1970

MILITARY SPECIFICATION

HOSE ASSEMBLY, METAL, CRYOGENIC LIQUID, AIRCRAFT SERVICING

This specification is approved for use by the Department of the Air Force, and is available for use by all Departments and Agencies of the Department of Defense.

1. SCOPE

1.1 This specification covers a nonvacuum metal hose assembly for servicing aircraft with cryogenic liquids (liquid oxygen or liquid nitrogen).

2. APPLICABLE DOCUMENTS

2.1 The following documents, of the issue in effect on date of invitation for bids or request for proposal, form a part of this specification to the extend specified herein:

SPECIFICATIONS

Federal

L-P-378	Plastic Film (Polyethylene Thin Gage)
BB-N-411	Nitrogen
PPP-B-636	Boxes, Fiberboard
PPP-C-795	Cushioning Material, Flexible, Cellular, Plastic Film for Packaging Applications

Military

MIL-O-27210	Oxygen, Aviators' Breathing, Liquid and Gas
MIL-C-81302	Cleaning Compound, Solvent, Trichlorotrifluoroethane

STANDARDS

Military

MIL-STD-105	Sampling Procedures and Tables for Inspection by Attributes
MIL-STD-129	Marking for Shipment and Storage
MIL-STD-130	Identification Marking of US Military Property
MIL-STD-831	Test Reports, Preparation of
MIL-STD-1186	Cushioning, Anchoring, Bracing, Blocking, and Waterproofing, with Appropriate Test Methods

(Copies of specification, standards, drawings, and publications required by suppliers in connection with specific procurement functions should be obtained from the procuring activity or as directed by the contracting officer).

Beneficial comments (recommendations, additions, deletions) and any pertinent data which may be of use in improving this document should be addressed to: SA-ALC/SFRM/Kelly AFB TX 78241 by using the self-addressed Standardization Document Improvement Proposal (DD Form 1426) appearing at the end of this document or by letter.

FSC 4720

Downloaded from http://www.everyspec.com

3. REQUIREMENTS:

3.1 Design and Construction. The hose assembly shall be designed and constructed as specified herein for use with cryogenic fluids such as type II liquid oxygen conforming to MIL-O-27210 and type II liquid nitrogen conforming to BB-N-411.

3.1.1 The hose assembly shall consist of at least a metal inner hose to carry the cryogenic liquid, a metal braid to surround and protect the inner hose, and a metal outer covering to provide abrasion protection to the inner materials. The outer metal covering shall not contact the outer surface of the inner hose. A non-metallic substance shall separate them, thereby reducing the heat transfer which would occur if there were a metal-to-metal contact. The hose assembly shall conform to the weight, size, flexibility and other physical characteristics listed below:

a. Length of the hose assembly shall be 10 feet $\pm$ 1 inch.

b. The inner diameter of the inner hose shall be 0.375 inches minimum.

c. The outer diameter of the outer covering shall be 1.2 inches maximum, and it shall be designed such that no sharp or frayed portions of metal are exposed.

d. The weight of the hose assembly shall not exceed seven pounds.

e. One end of the hose assembly shall terminate in a 3/4 inch NPT standard female metal fitting having a thread pitch of 1/14 and the other end shall terminate in a 1 inch NPT standard male metal fitting with a thread pitch of 1/11.5.

f. The hose assembly shall be constructed such that the bend radius throughout the hose length is less than or equal to 7 inches. (SEE FIGURE 1)

g. All hose assembly materials shall be compatible with liquid or gaseous oxygen and nitrogen.

h. All metal parts of the hose assembly shall be 300 Series Stainless Steels.

i. Provided that all other requirements of this specification are met, reclaimed materials may be used.

3.2 Performance

3.2.1 Proof Pressure. The hose assembly shall have a proof pressure of 150 PSI.

3.2.2 Burst Pressure. The hose assembly shall have a burst pressure of not less than 500 PSI.

3.2.3 Operation. With a service pressure of 45 $\pm$ 5 PSI, the hose assembly shall be capable of being purged in 2 minutes or less and then shall be capable of servicing liquid nitrogen through the hose and out the filler valve, as a liquid at a minimum rate of 1 gallon per minute at 70 $\pm$ 10° F.

3.2.4 Outer Hose Surface Temperature. The outer surface temperature of the

Downloaded from http://www.everyspec.com

hose assembly shall not drop below 15°F after 10 minutes of servicing with liquid nitrogen at an ambient temperature of 70± 10° F.

3.2.5 Tensile Strength. The hose assembly shall withstand a longitudinal tensile force of 300 pounds.

3.2.6 Abrasion. The hose assembly shall be capable of being dragged on a concrete surface for 20,000 feet without structually damaging the hose assembly.

3.2.7 Continuity. The hose assembly shall have electrical continuity from one end fitting, through the hose, to the other end fitting.

3.3 Identification of Product. The hose assembly shall be marked for identification in accordance with MIL-STD-130 as specified for parts. The marking shall be made in raised or stamped lettering.

3.4 Workmanship. The hose assembly shall be assembled and finished in a thoroughly workmanlike manner. Particular attention shall be given to freedom from blemishes, defects, burrs, and sharp edges, and to thoroughness of welding. Loose, spattered, or excess weld shall be removed from subassemblies prior to degreasing and final assembly.

3.4.1 Cleaning. Clean all parts of the hose assembly that might come in contact with liquid oxygen in accordance with standard industrial practices, with cleaning solvents that are oxygen-safe such as trichlorotrifluoroethane (MIL-C-81302) or trichloroethane. For purposes of cleaning, 50 hose assemblies shall constitute a lot. The same batch of cleaning solvent shall be used to clean the lot of 50. If the batch of cleaning solvent becomes dirty and must be changed, that quantity of hoses cleaned prior to the change shall constitute a lot. Immediately following cleaning, hoses shall be dried with oil-free air or gaseous nitrogen (BB-N-411) and shall then have their ends sealed. The interior of the inner hose and end fittings of the cleaned hose assemblies shall meet the requirements listed below:

a. Particle count and sizes

(1) No particle (metal or nonmetal) greater than 2500 microns in any direction.

(2) No more than one particle between 700 and 2500 microns.

(3) No more than five particles between 175 and 700 microns.

b. Non-volatile residue shall not exceed 0.001 grams per square foot of the inner hose's interior surface area.

4. QUALITY ASSURANCE PROVISIONS

4.1 Responsibility for Testing/Inspection. Unless otherwise specified in the contract or purchase order, the supplier is responsible for the performance of all test/inspection requirements as specified herein. Except as otherwise specified, the suppler may utilize his own facilities or any commercial laboratory acceptable to the Government. The Government reserves the right to perform any of the tests/inspections set forth in the specification where such are deemed necessary to assure supplies and services conform to prescribed

Downloaded from http://www.everyspec.com

requirements. No tests/inspections shall be performed until the test plan has been approved by the responsible Government Representative and only after the Government Representative has approved the time and location of the tests/inspections.

4.2 Classification of Tests. The inspection and testing of the hose assembly shall be classified as follows:

a. Preproduction tests .....See 4.5

b. Acceptance tests .....See 4.6

4.3 Test Conditions. Unless otherwise specified, all tests shall be performed at an ambient temperature of 70 $\pm$ 10° F, and pressure readings shall be within $\pm$ 2 PSI of the required test pressure.

4.4 Test Report. Within 20 days after the completion of the preproduction tests, a test report shall be written based upon the results in accordance with MIL-STD-831, and submitted to the responsible Government procuring activity.

4.5 Preproduction Tests. These preproduction tests shall be performed on one hose assembly. The tests shall be performed in the order presented below. In order for the hose assembly to be acceptable, it must successfully pass, first the cleanliness tests of 4.6.3.1 and 4.6.3.2, then each of the preproduction tests listed below.

4.5.1 Test Article. The hose assembly for the preproduction tests shall be randomly selected by an authorized Government Representative from a lot of five (5) hose assemblies which have been manufactured in the same manner that all hose assemblies to be bought per the contract will be manufactured. If the preproduction tests are successfully passed, the remaining four (4) hose assemblies shall be included in the first lot of hose assemblies to be delivered to the Government.

4.5.2 Examination of Hose. The hose assembly shall be physically inspected to insure the following:

a. Total length of 10 feet $\pm$ 1 inch.

b. Inner diameter of inner hose not less than 0.375 inches.

c. Outer diameter of outer covering of not more than 1.2 inches.

d. Total weight of 7 pounds or less.

e. Hose assembly terminates in a 3/4 inch NPT standard female metal fitting having a thread pitch of 1/14 at one end, and a 1 inch NPT standard male metal fitting with a thread pitch of 1/11.5 at the other end.

f. The outer covering is free from sharp or frayed portions of metal.

4.5.3 Proof Pressure Test. The hose assembly shall be pneumatically pressurized to 150 PSIG for at least 3 minutes while completely submerged in clean water. No steady stream of air bubble leakage shall be evident from the hose

Downloaded from http://www.everyspec.com

assembly. The hose assembly shall then be depressurized, removed from the water bath and visually inspected. Any leakage found during the water soak, or any damage found during the visual inspection as a result of pressurization shall be cause for rejection of that hose assembly. Immediately following this test, the hose shall be air blown and wiped dry.

4.5.4 Bend Radius Test. The hose assembly shall be set up as shown in Figure 1, and operated 45 minutes - fifteen (15) minutes at each of three different heights "H" of 1, 3 and 6 feet. The liquid nitrogen flow rate shall be at least 1 GPM and the hose shall not rupture or leak as a result of this test or develop sharp or frayed edges which could injure operating personnel. The integrity of the hose shall be verified by repeating the proof pressure test or paragraph 4.5.3. Any leakage from the hose or its end fittings shall be evidence of having failed to meet the bend radius requirement.

4.5.5 Tensile and Temperature Tests. The temperature test shall be run during the first 10 minutes of the 30 minute tensile test.

4.5.5.1 The male end of the hose assembly shall be attached to a solid support and liquid nitrogen shall flow through it and out of the other end at a flow rate of one (1) gallon per minute. Three thermocouples shall be placed on the outer covering of the hose assembly in order to record the surface temperature throughout the first 10 minutes of liquid nitrogen flow. Two of the thermocouples shall be attached approximately one (1) foot from either end of the hose assembly, and the third shall be attached near the middle. No external heat sources shall be directed toward the hose or thermocouples during this test. The hose assembly shall be rejected if the outer surface temperature falls below 15°F after liquid nitrogen has flowed through the hose for 10 minutes.

4.5.5.2 Without a break in the flow of liquid nitrogen per paragraph 4.5.5.1 above, a flow of 1 gallon per minute shall continue for an additional 20 minutes. Immediately following these 20 minutes, and just after the flow is stopped, a tensile force of 300 pounds shall be applied at the free end of the hose. This pulling and stretching force shall remain for 1 minute. The hose shall then be proof pressure tested per paragraph 4.5.3 above. Any leakage from the hose assembly shall be cause for rejection.

4.5.6 Abrasion Drag Test. The hose assembly shall be placed on a dry, brushed concrete surface, such as a runway, and dragged a distance of 20,000 feet at a speed of 4 to 5 MPH. The end of the hose with the male end fitting shall be approximately 18 inches above the ground, held stationary, and shall be horizontally oriented with the centerline of the hose pointing in the direction being dragged. The hose shall be visually inspected each 5,000 feet and at the end mark of 20,000 feet. The extent of wear shall be reported at each inspection. Fraying or the development of sharp edges which would be dangerous to operating personnel shall be considered basis for rejection of the hose.

4.5.7 Servicing Test. The hose assembly shall be connected to a source capable of providing 45 $\pm$ 5 PSI pressurized liquid nitrogen. Connect a true hose filler valve and aircraft filler valve to the female end fitting of the hose assembly to duplicate the environment the hose assembly sees during aircraft servicing. Connect the male end fitting of the hose assembly to the pressurized liquid nitrogen source. This source of pressurized liquid nitrogen shall be capable of being turned off and on easily. Obtain a vessel that will be able to hold discharged liquid nitrogen and establish a means to

Downloaded from http://www.everyspec.com

record collections of 1 to 1.5 liters of liquid nitrogen at a time. With the above apparatus in place, perform the following service test:

a. With a service pressure of 45 $\pm$ 5 PSI, purge the hose assembly and record the time it takes to complete purging (See 6.3.3). The total purging time, recorded from opening of the pressurized liquid nitrogen source to when liquid nitrogen begins flowing out through the hose and aircraft filler valves, shall not exceed 2 minutes. Once liquid nitrogen begins flowing, close off the source of liquid nitrogen to the hose assembly. If the hose assembly does not purge in 2 minutes or less, it shall be rejected.

b. The hose assembly shall next be subjected to a series of 50 servicing cycles. Each cycle shall consist of:

(1) Opening the source of liquid nitrogen.

(2) Flowing liquid nitrogen through the hose assembly into a discharge vessel.

(3) Discharging 1 to 1.5 liters of liquid nitrogen into the discharge vessel.

(4) Shutting off the source of liquid nitrogen.

(5) Repeating the cycle after waiting a period of 3 minutes, until 50 cycles are accomplished.

The hose assembly shall complete the 50 servicing cycles without leakage or damage, or it shall be considered to have failed the test. Remove the hose and aircraft filler valves after this test.

4.5.8 Continuity Test. The hose assembly shall be checked to verify that there is electrical continuity through the hose assembly when measured from one end fitting to the other end fitting.

4.5.9 Burst Pressure Test. The hose assembly shall be hydrostatically pressurized at the completion of all tests at a rate not to exceed 50 PSIG per minute until it ruptures. Failure of the hose or its end fittings at a pressure of less than 500 PSIG shall be cause for rejection.

4.6 Acceptance Tests. Prior to acceptance by the Government, all hose assemblies shall be subjected to and pass tests presented in paragraphs 4.6.1 and 4.6.2 below. Any hose assembly not meeting the test requirements of paragraphs 4.6.1 or 4.6.2 shall be rejected. All acceptance tests shall be run at an ambient temperature of 70 + 30°F - 15°F.

4.6.1 Inspection Test. Each hose assembly shall meet the "Examination of hose" requirements defined in paragraph 4.5.2 herein.

4.6.2 Pressure Test. Each hose assembly shall meet the "Proof Pressure Test" requirements defined in paragraph 4.5.3 herein.

4.6.3 Cleanliness Test. Prior to delivery of the hose assemblies, a random sample shall be selected in accordance with MIL-STD-105 at Special Inspection Level S-1. The Acceptable Quality Level (AQL) shall be 6.5. The lot size shall be 50 hose assemblies, which shall make the normal sample size equal to 2.

Downloaded from http://www.everyspec.com

The 50 hose assemblies making up a lot shall have been cleaned with the same batch of cleaning solvent. If the cleaning solvent was changed for some reason, the lot size for this test shall be that number of hose assemblies, less than 50, that were cleaned prior to the change and the normal sample size shall still be 2. The next lot would start with the introduction of the new batch of cleaning solvent. The samples chosen shall pass the particular and non-volatile residue tests listed below.

4.6.3.1 Particulate Test. The test sample hose assembly shall have its end seals removed and placed vertically, taking care to insure that no contaminates enter the hose. A 500 milliliter sample of trichlorotrifluoroethane, Type I, per MIL-C-81302 or equivalent shall be poured through the hose assembly from the top, such that the interior walls are rinsed and flushed with solvent. The liquid leaving the bottom of the hose shall be collected in a clean container and filtered by means of a vacuum pump through a 10 micron membrane filter. (The filtered solvent, in its cleaned container, shall be saved for later use in the non-volatile residue test). Inspect the filter surface through a suitable magnifying device for the presence of particles. The particulate found on the membrane filter surface shall have (1) no particle (metal or nonmetal) greater than 2500 microns in any direction. (2) no more than one particle between 700 and 2500 microns and, (3) no more than five particles between 175 and 700 microns. Immediately after the rinsing of this test sample hose assembly, it shall be thoroughly dried and its ends shall be resealed.

4.6.3.2 Non-Volatile Residue (NVR) Test. To determine the amount of NVR, follow the procedures listed below:

a. Dry a 125 milliliter capacity platinum (or high-silica glass) evaporating dish in an oven at 105 $\pm$ 5 degrees C and cool in a desiccator. Repeat until the weight is constant or within 0.1 milligram of the last weighing. Record this last weight. Rinse a clean-dry 1000 milliliter volumetric flask with Type I trichlorotrifluoroethane solvent or equivalent, and then fill it with the filtered solvent saved from the particulate test. Invert the evaporating dish, place it over the mouth of the flask, hold it firmly in place and invert the flask. In this position, place both dish and flask on a steam bath or suitable heat source. Adjust a ring support to hold the flask so the mouth of the flask is 1 in. (25 millimeter) above the bottom of the evaporating dish. Thus held, the flask automatically feeds the solvent to the dish during evaporation. (Caution - the test should be run in a ventilated, dust-free area)

b. Evaporate the sample of filtered solvent to dryness. Remove the dish from the steam bath or suitable heat source with metal tongs and blot the outside of the dish with a lint-free paper tissue or equivalent.

c. Place the dish in an oven at 105 $\pm$ 5 degrees C for approximately 1 hour. Cool in a desiccator and weigh the dish. From this weight, subtract the empty dish weight obtained in "a" above. The difference between these 2 weights is the weight of the NVR. The weight of the NVR shall be divided by the interior surface area of the hose assembly and the value obtained shall be less than 0.001 grams per square foot.

4.6.3.3 Retest/Rejection. If either the particulate test or the NVR test requirements are not met, the test samples and the other hose assemblies from the lot shall be recleaned and the cleanliness tests of paragraph 4.6.3 shall be repeated. If the test sample from this recleaned lot also fails the

Downloaded from http://www.everyspec.com

particulate or NVR test, the entire lot shall be rejected. Note, if 2 lots of 5 consecutive lots have been rejected, the sample size will switch from normal to tightened in accordance with MIL-STD-105.

5. PREPARATION FOR DELIVERY

5.1 Cleaning. Each hose assembly shall be cleaned as specified in paragraph 3.4.1.

5.1.1 Preservation and Packaging. Preservation and packaging shall be level A or C (See 6.2).

5.1.2 Level A. Each hose assembly shall be preserved Method 1C-1 without preservative and encased in a clean plastic bag, fabricated from Type II, Class 3, Grade C material, conforming to L-P-378, having a minimum thickness of 6 miles (0.006 inch). The bag shall be heat sealed. Each bagged hose assembly shall be packaged in a Type CF, Class - weather resistance, variety SW, Grade V3C, W5c of W6c fiberboard unit container conforming to PPP-B-636. Hose assembly shall be coiled when packaged. Radii of the coils shall not be less than eight (8) inches. Sufficient cushioning material conforming to Class I of PPP-C-795 shall be placed between the coils, over the ends of the hose and around the outside diameter of the coils to prevent abrasion or rupture of the plastic bag. Closure of the unit container shall be in accordance with the appendix to PPP-B-636.

5.1.3 Level C. Level C packaging and preservation shall be the same as Level A, except the unit container shall conform to Type CF, Class - Domestic, variety SW, Grade 200 or 275.

5.2 Packing. Packing shall be Level A or C (See 6.2).

5.2.1 Level A. Hose assemblies packaged as specified in 5.1.2 shall not be overboxed for shipment. Hose assemblies shall be shipped in the unit container.

5.2.2 Level C. Packages that require overpacking for acceptance by the carrier shall be packed in a manner that will insure safe transportation, at the lowest rate, to the point of delivery. Containers shall meet applicable carrier rules and regulations.

5.3 Physical Protection. Blocking, bracing, and cushioning shall be as specified in MIL-STD-1186.

5.4 Marking. In addition to markings required by the contract or order (See 6.2), unit and shipping containers shall be marked in accordance with MIL-STD-129. The nomenclature shall be as follows:

HOSE ASSEMBLY, METAL, CRYOGENIC LIQUID, AIRCRAFT SERVICING

5.4.1 Precautionary Markings. The following marking shall be included:

DO NOT ALLOW OIL OF ANY KIND TO BE USED
ON OR COME IN CONTACT WITH THE HOSE

6. NOTES

Downloaded from http://www.everyspec.com

6.1 Intended Use. The hose assembly covered by this specification is intended for use as a flexible line for transmitting liquid oxygen or nitrogen from servicing equipment to aircraft.

6.2 Ordering Data. Procurement documents should specify the following:

a. Title, number, and date of this specification.

b. In the event it becomes necessary to change the drawing(s) to achieve the performance requirements of the specification, the contractor shall immediately notify the contracting officer, with recommendations for drawing changes to obtain the required performance. To the extent approved, such changes shall be processed in accordance with the provisions of the changes clause of the contract.

c. Location and conditions for preproduction testing. (See section 4).

d. Required level of preservation and packaging, and packing (See section 5).

e. Special shipment markings (See 5.4).

6.3 Definitions. For the purpose of this specification, the following definitions will apply.

6.3.1 Hose Assembly. The ten feet of hose including the male and female end fittings attached at either end.

6.3.2 Servicing Pressure. The pressure of the cryogenic liquid (45 $\pm$ 5 PSI) in the tank which will be transmitted through the hose assembly to the aircraft requiring liquid nitrogen or oxygen.

6.3.3 Purging. The process of flowing liquid nitrogen or oxygen fluid through the hose assembly which was previously empty - gaseous vapor of the cryogenic fluid is usually seen first, purging is complete when the hose assembly has cold soaked sufficiently such that liquid cryogenic fluid begins to flow out the end of the hose assembly.

6.3.4 Servicing Cycle. A servicing cycle shall be defined as transferring cryogenic liquid under pressure from one vessel to another.

6.3.5 Hose Filler Valve. A valve that attaches to the end of the hose that is cylindrical with an OD of 2 1/4 inches, length 7 inches and weighs approximately 2 pounds 11 ounces, USAF Part Number 20C-0021-2.

6.3.6 Aircraft Filler Valve. The aircraft filler valve is the valve that the hose filler valve connects to in order to transfer cryogenic liquid. It is 2 3/8 inches long and weighs approximately 9 ounces, USAF Part Number 20C-0003-6.

Custodian:

Air Force - 68

Preparing Activity:

Air Force - 68

Project No. 4720-F643

Downloaded from http://www.everyspec.com

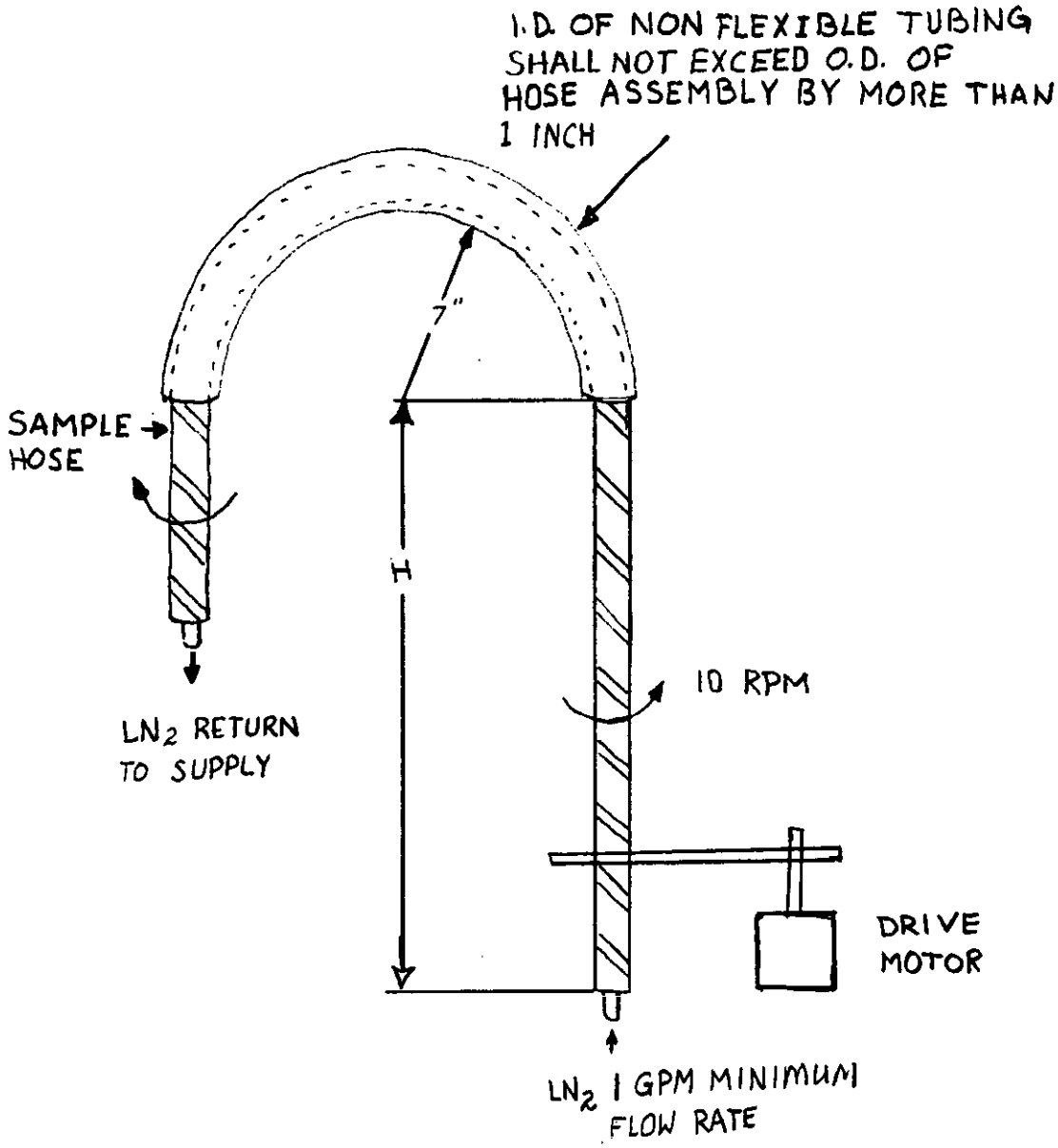

FIGURE 1

☆U.S. GOVERNMENT PRINTING OFFICE: 1983—705-040/5618

Downloaded from http://www.everyspec.com

INSTRUCTIONS: In a continuing effort to make our standardization documents better, the DoD provides this form for use in submitting comments and suggestions for improvements. All users of military standardization documents are invited to provide suggestions. This form may be detached, folded along the lines indicated, taped along the loose edge *(DO NOT STAPLE)*, and mailed. In block 5, be as specific as possible about particular problem areas such as wording which required interpretation, was too rigid, restrictive, loose, ambiguous, or was incompatible, and give proposed wording changes which would alleviate the problems. Enter in block 6 any remarks not related to a specific paragraph of the document. If block 7 is filled out, an acknowledgement will be mailed to you within 30 days to let you know that your comments were received and are being considered.

NOTE: This form may not be used to request copies of documents, nor to request waivers, deviations, or clarification of specification requirements on current contracts. Comments submitted on this form do not constitute or imply authorization to waive any portion of the referenced document*(s)* or to amend contractual requirements.

☆ U.S. Government Printing Office: 1982—360-979/5804

(Fold along this line)

(Fold along this line)

NO POSTAGE NECESSARY IF MAILED IN THE UNITED STATES

OFFICIAL BUSINESS
PENALTY FOR PRIVATE USE $300

BUSINESS REPLY MAIL
FIRST CLASS PERMIT NO. 73236 WASH DC

POSTAGE WILL BE PAID BY HQ U.S. AIR FORCE

SA-ALC/SFRM

Kelly AFB TX 78241

Downloaded from http://www.everyspec.com

STANDARDIZATION DOCUMENT IMPROVEMENT PROPOSAL

(See Instructions – Reverse Side)

1. DOCUMENT NUMBER	2. DOCUMENT TITLE
MIL-H-83772A (USAF)	Hose Assembly, Metal, Cryogenic Liquid, Aircraft Servicing

3a. NAME OF SUBMITTING ORGANIZATION	4. TYPE OF ORGANIZATION *(Mark one)*
	☐ VENDOR
b. ADDRESS *(Street, City, State, ZIP Code)*	☐ USER
	☐ MANUFACTURER
	☐ OTHER *(Specify)*: _____

5. PROBLEM AREAS

a. Paragraph Number and Wording:

b. Recommended Wording:

c. Reason/Rationale for Recommendation:

6. REMARKS

7a. NAME OF SUBMITTER *(Last, First, MI)* — Optional	b. WORK TELEPHONE NUMBER *(Include Area Code)* — Optional
c. MAILING ADDRESS *(Street, City, State, ZIP Code)* — Optional	8. DATE OF SUBMISSION *(YYMMDD)*

DD FORM 82 MAR 1426 PREVIOUS EDITION IS OBSOLETE.