Downloaded from http://www.everyspec.com

MILITARY SPECIFICATION

HEADSET-MICROPHONE AND HEADSET-ELECTRICAL (MEDIUM NOISE ATTENUATION, HEARING PROTECTIVE), GENERAL SPECIFICATION FOR

This specification is approved for use by all Departments and Agencies of the Department of Defense.

1. SCOPE

1.1 Scope. This specification covers headsets and headset-microphone assemblies intended for use in medium ambient noise level environments of 85-105 dBA SPL (Sound Pressure Level). These headset-microphone assemblies shall use dynamic earphones of the moving coil type that transform electrical energy into acoustical energy and shall be a complete assembly including headband, earphone(s) mounted in rigid earcups, with cord assemblies to meet requirements of various military service activities. The assemblies shall include, as required, a noise cancelling microphone and boom.

2. APPLICABLE DOCUMENTS

2.1 Issues of documents. The following documents, of the issue in effect on date of invitation for bids or request for proposal, form a part of this specification to the extent specified herein.

SPECIFICATIONS

FEDERAL

NN-P-71	-	Pallets, Materials-handling, Wood, Stringer Construction, 2-Way and 4-Way (Partial).
QQ-S-781	-	Strapping, Steel, and Seals.
PPP-B-585	-	Boxes, Wood, Wirebound.
PPP-B-601	-	Boxes, Wood, Cleated-Plywood.
PPP-B-621	-	Boxes, Wood, Nailed and Lock-Corner.
PPP-B-636	-	Boxes, Shipping, Fiberboard.
PPP-T-60	-	Tape Packaging, Waterproof.
PPP-T-76	-	Tape, Packaging, Paper (For Carton Sealing).

MILITARY

MIL-P-116	-	Preservation-packaging, Methods of.
MIL-J-641/8	-	Jacks, Telephone Type JJ-055.
MIL-P-642/7	-	Plugs, Telephone (Type PJ-292) and Accessory Screws.
MIL-I-4997	-	Insulating and Jacketing Compounds for use in Cords, Cordages, and Cables.
MIL-E-5400	-	Electronic Equipment, Airborne, General Specification for.
MIL-F-14072	-	Finishes for Ground Electronic Equipment.
MIL-F-14256	-	Flux, Soldering, Liquid (Rosin Base).
MIL-A-23595	-	Amplifier, Audio Frequency AM-3597C/A and AM-4326B/A.
MIL-A-23899	-	Aural Protector, Sound.
MIL-E-25670	-	Earphone Elements, General Specification For.
MIL-P-26514	-	Polyurethane Foam, Rigid or Flexible, for Packaging.
MIL-M-26542/1	-	Microphone, M26542/1-01.

Beneficial comments (recommendations, additions, deletions) and any pertinent data which may be of use in improving this document should be addressed to: Commander, Air Force Logistics Command, ATTN: AFLC/LOIE, Wright-Patterson AFB, OH 45433, by using the self-addressed Standardization Document Improvement Proposal (DD Form 1426) appearing at the end of this document or by letter.

Downloaded from http://www.everyspec.com

MIL-M-26542/2 - Microphone, M-87/AIC.
MIL-C-45662 - Calibration System Requirements.
MIL-C-55116 - Connectors; Miniature Audio, Five-Pin.
MIL-H-55535 - Headset-Microphone Kit MK-1039/G.
MIL-C-55668 - Cord, Electrical Audio, Retractile, Subminiature.
MIL-T-81642 - Telephone Plug U-384/U.
MIL-T-81643 - Telephone Jack U-385/U.
MIL-E-83510 - Earphone Element.

(See supplement 1 for list of applicable specification sheets.)

STANDARDS

FEDERAL

FED-STD-595 - Colors.

MILITARY

MIL-STD-105 - Sampling Procedures and Tables for Inspection by Attributes.
MIL-STD-129 - Marking for Shipment and Storage.
MIL-STD-147 - Palletized Unit Loads for 40" x 48" Pallets.
MIL-STD-202 - Test Methods for Electronic and Electrical Component Parts.
MIL-STD-454 - Standard General Requirements for Electronic Equipment.
MIL-STD-810 - Environmental Test Methods.
MIL-STD-1285 - Marking of Electrical and Electronic Parts.

(Copies of specifications, standards, drawings, and publications required by contractors in connection with specific procurement functions should be obtained from the procuring activity or as directed by the contracting officer.)

2.2 Other publications. The following documents form a part of this specification to the extent specified herein. Unless otherwise indicated, the issue in effect on date of invitation for bids or request for proposal shall apply.

AMERICAN NATIONAL STANDARDS INSTITUTE (ANSI)

S3.19-1974 - Measurement of Real-Ear Protection of Hearing Protectors and Physical Attenuation of Earmuffs, Method for the.
S3.5-1969 - Methods for the Calculation of the Articulation Index.

(Application for copies should be addressed to the American National Standards Institute, 1430 Broadway, New York, New York 10018.)

(Technical society and technical association specifications and standards are generally available for reference from libraries. They are also distributed among technical groups and using Federal Agencies.)

3. REQUIREMENTS

3.1 Specification sheets. The individual item requirements shall be as specified herein and in accordance with the applicable specification sheets. In the event of any conflict between requirements of this specification and the specification sheet, the latter shall govern.

3.2 Qualification. The headset or headset-microphone assemblies furnished under this specification shall be products which are qualified for listing on the applicable qualified products list at the time set for opening of bids (see 4.6 and 6.2).

3.3 Component parts. The headset or headset microphone shall consist of the component parts (see 3.1), and these components shall meet the requirements of the respective documents.

Downloaded from http://www.everyspec.com

3.4 Materials.

3.4.1 Insulating and jacket compounds for cords. Insulating and jacket compounds for cords shall comply to MIL-I-4997.

3.4.2 Polyurethane foam. Polyurethane foam for the earcushion shall conform to MIL-P-26514.

3.4.3 Solder flux. The solder flux shall conform to type R of MIL-F-14256.

3.5 Design and construction.

3.5.1 Headsets and headset-microphones. The assemblies specified herein shall not cause dermatitis by reason of selection, processing, or fabrication of components. The headset shall be designed to be worn by all military personnel, including personnel wearing eyeglasses. Upon examination, the requirements specified in figure 1 shall be met.

3.5.1.1 Weight. Unless otherwise specified, the maximum weight shall be 1.5 pounds.

3.5.1.1.1 Light weight. Headsets specified "light-weight" shall have a maximum weight of 18 ounces.

3.5.1.2 Interchangeability. The equipment shall meet the interchangeability requirements as defined in MIL-E-5400.

3.5.1.3 Operational stability. The assemblies shall operate with optimum performance indefinitely, continuously or intermittently.

3.5.2 Metals. The metals used shall be of the proper alloy and hardness necessary to provide the required strength and rigidity with the maximum strength to weight ratio. Metals shall be of a corrosion-resistant type or shall be treated in accordance with MIL-F-14072, type II (sheltered).

3.5.3 Earphone assembly. The earcup shall meet the requirements shown in figures 2 and 3.

3.5.3.1 Rigid earcups. The earcups shall be fabricated from A.B.S. plastic or any equally suitable material. Unless otherwise specified (see 3.1), the color shall be gray 26329 of FED-STD-595. If the earcup is constructed of more than one piece, the pieces shall be permanently joined together. All seams shall be smooth.

3.5.3.2 Earphone element mounting. The element shall be mounted in the earcup by plastic foam in such a manner that the element and cup shall be easy to assemble and disassemble. The earphone can be dropped into the inner fill foam (split to accept earphone).

3.5.3.3 Fillers. The earcup fillers shall be installed in the earcup cavity so that the material will not normally come in contact with the user's ears. The filler material used for the earcup filler shall be polyurethane foam per MIL-P-26514, type I, class 2, minimum density of 3 lbs/ft^3. Color is optional and shall not be treated in any manner to cause skin irritation. Unless otherwise specified, the filler shall have a cavity to accept and retain the earphone. The fillers shall be designed so that they can be removed from the earcup cavities and replaced without damage to the fillers or earcups. The filler material shall not be glued to the earcup.

3.5.3.4 Attachment provisions. The earcup shall be attached to the headband with a flat steel band yoke in accordance with ANSI S3.19-1974 and MIL-A-23899.

3.5.3.5 Earcup cushion. The cushion shall be easily replaceable and shall not be cemented to the earcup, however, it shall remain attached during normal usage. No treatments used to process the device shall cause skin irritation. The overall depth or thickness shall be 0.375 to 0.500 inch. The cushion shall not decrease the opening of the earcup. It shall form a seal around eyeglasses, and it shall not allow any appreciable ambient noise to leak into the inner chamber of the earcup (see figure 4).

Downloaded from http://www.everyspec.com

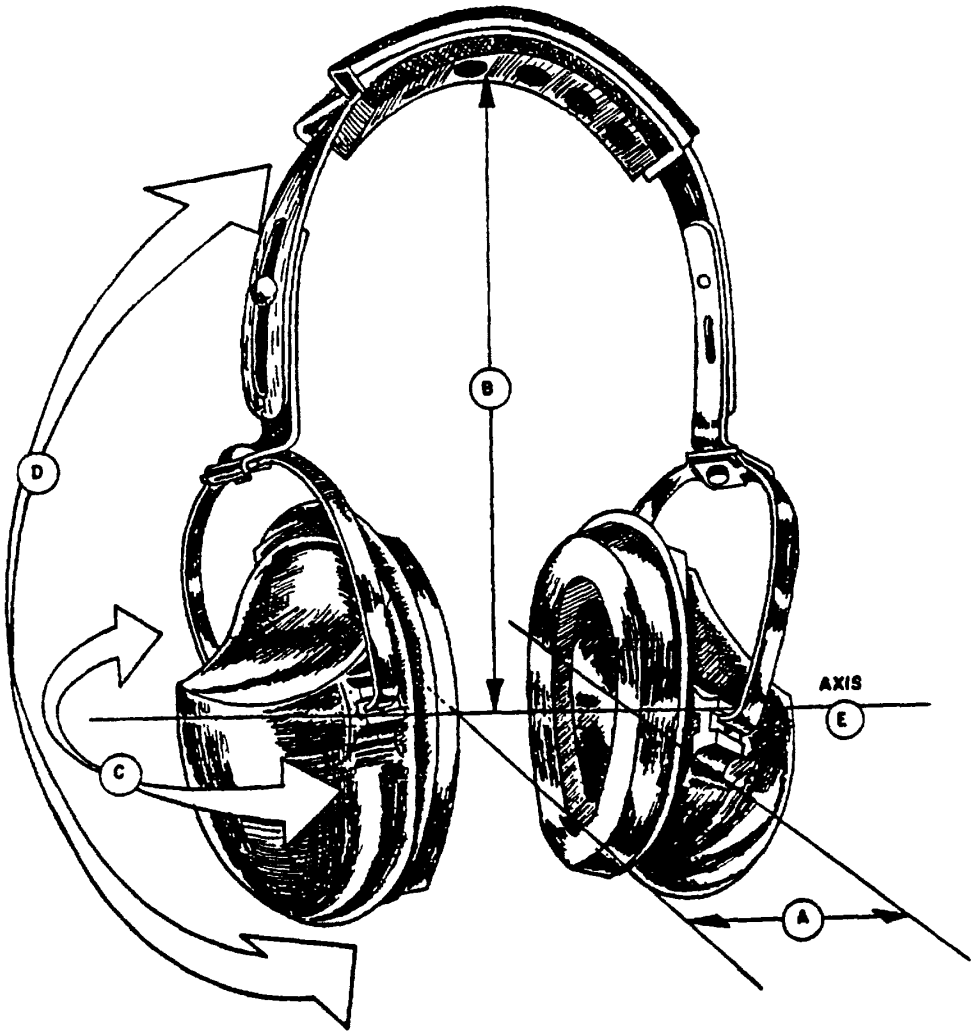

FIGURE 1. Design and construction of headset.

Downloaded from http://www.everyspec.com

NOTES:

1. Dimension "B" - 4.57 (116 1 mm) with dimension "A" set at 5.12 (130.0 mm), 5.59 (142.0 mm) with dimension "A" set at 6 10 (155.0 mm).
2. The force required to maintain "A" dimensions of 6.10 (155 0 mm) shall not be greater than 3.5 pounds
3. Angular deflection "C" ±5 with respect to axis "E"
4. Angular deflection "D" - the earcup plane shall be freely movable between verticle and angle of 5° (top out - bottom in) at all settings of dimension "A".
5. Angular displacement from 0° or neutral position shall not generate couples causing uneven earseal pressure.
6. The earcup shall be suspended by yokes (stirrup) from the headband to allow quick adjustment and suitable pressure to the head of the user
7. Metric equivalents are in parentheses.
8. Metric equivalents are given for general information only and are based upon 1.00 inch = 25.4 mm.

FIGURE 1. Design and construction of headset - Continued

Downloaded from http://www.everyspec.com

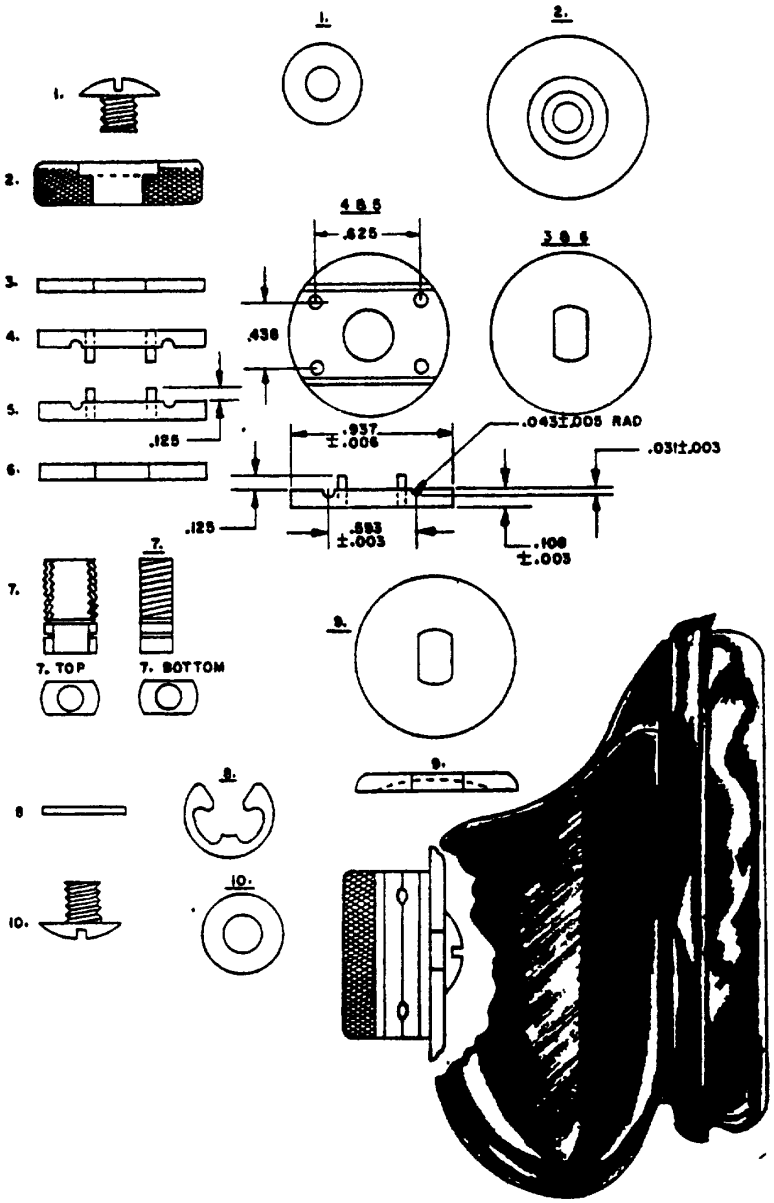

INCHES	MM
.003	0.01
.005	0.01
006	0 02
031	0.79
.043	1.09
.108	2.74
.125	3.18
.438	11.13
.593	15.06
.625	15.88
.937	23.80

FIGURE 2. A typical earcup showing the cushion and hardware used to fasten earcup with microphone boom.

Downloaded from http://www.everyspec.com

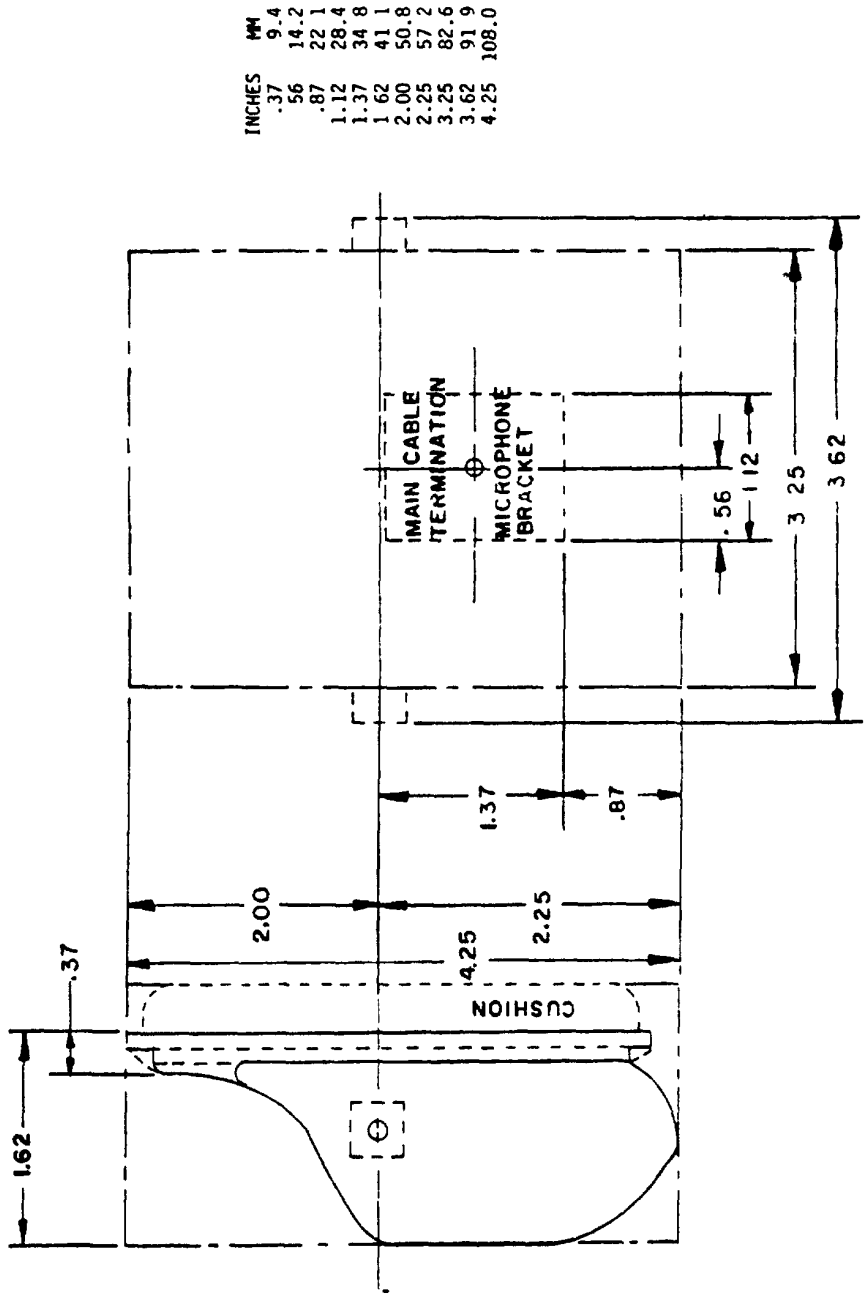

FIGURE 3. Interface earcup envelope with cushions and cord

Downloaded from http://www.everyspec.com

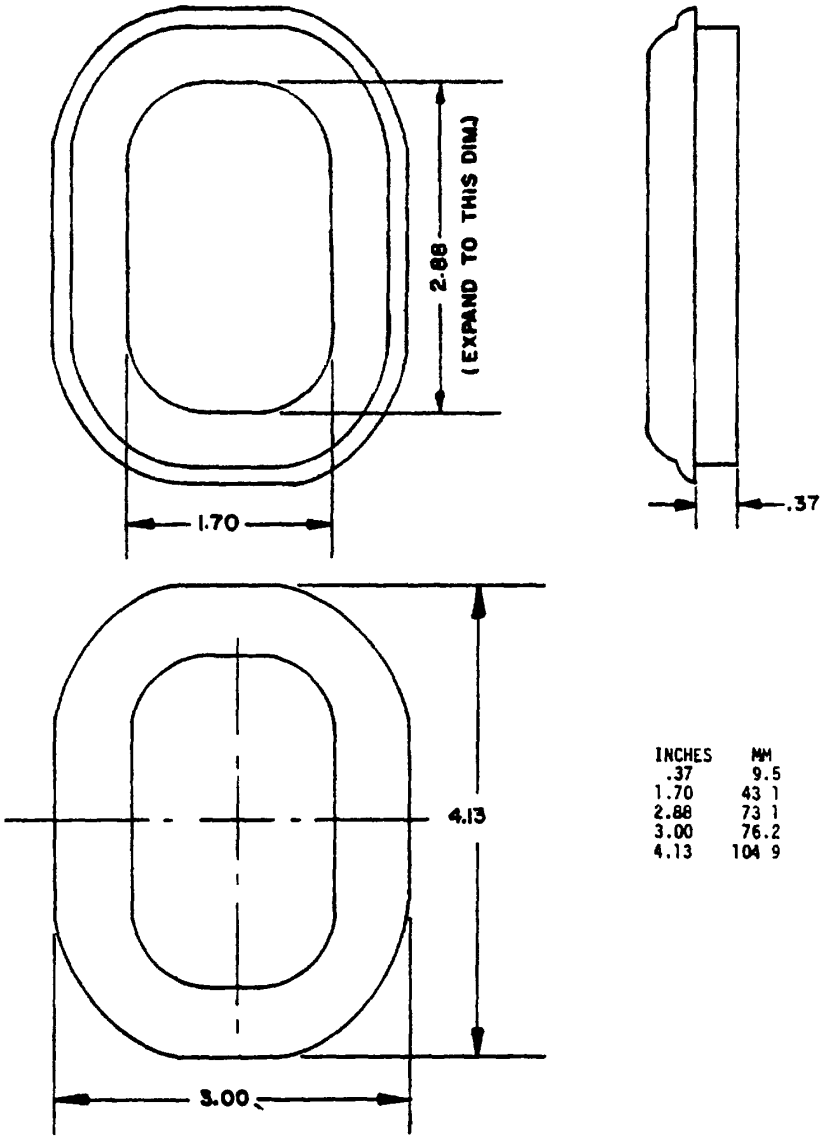

INCHES	MM
.37	9.5
1.70	43 1
2.88	73 1
3.00	76.2
4.13	104 9

FIGURE 4. Cushion.

Downloaded from http://www.everyspec.com

3.5.3.6 Earphone element. The earphones used in this equipment shall be the type and design specified (see 3.1) and shall have passed the component requirements specified.

3.5.3.7 Ear opening. The opening for the ear in the rigid earcup shall be not less than 2.8 inches long and 1.7 inches wide, rounded symmetrically (see figure 5). Wall thickness and external dimensions shall be held to a minimum so that good sound attenuation shall be provided.

3.5.3.8 Earphone mechanical stability. The stability of the diaphragm material and concentricity of the moving coil and air gap shall not be affected by extended aging and exposure to the environmental condition specified herein.

3.5.4 Headband and headband parts. The headband shall be single band, slide adjustable.

3.5.4.1 Yoke and earcup (see figures 6 and 7). The yoke shall be attached to the earcup in any manner to provide a free pivot point for the earcup. The width of the yoke shall not exceed 0.25 inch. The 2.375 inches dimension is intended as suggested distance to provide earcup clearance to the yoke. The 0.31 inch dimension shows suggested junction of yoke to earcup.

3.5.4.2 Yoke and headband (see figures 7 and 8). The junction of the yoke and headband shall allow for lateral movement of 5 degrees, either side of centerline Method of attachment and stop for articulation requirements shall be optional.

3.5.4.3 Headband (see figure 8). The headband and headband pad size shall be kept to a minimum. They shall provide support and comfort yet keep weight to a minimum. The headband adjustment mechanism would be manufacturer's option so long as envelop requirements are maintained. The tension provided on the adjustment slides shall be adequate to retain the headset-microphone in its position under a steady state acceleration G level of 2. Provisions shall be made for the overhead cord through the headband pad.

3.5.4.4 Sliding action. The sliding action on the headband assembly used for positioning the earcup over the ears shall be smooth and uniform throughout the entire extension distance. There shall be no protruding hardware or excessive wire to entangle with the oxygen mask harness for emergency donning of an oxygen mask. The tension provided on the adjustment slides shall be adequate to retain a headset-microphone in its position under a forward steady state acceleration G level of 2.

3.5.5 Microphone boom, cable, connector (see figure 9). A microphone boom shall be provided with each headset-microphone. The boom shall be attachable to the headset with a positioning device which shall provide a noncritical adjustment to obtain a torque of 30 to 50 ounce inches. The microphone supporting and adjustment assembly shall be designed for easy removal, cables to be provided to connect microphone output to main cable. A branch circuit cable shall be provided on the main cable junction. A cable shall also be provided from the microphone, parallel with the boom to the branch cord connector of the main cord. Miniature cable connectors shall be provided on the microphone cables. Connectors type U-173/U and type U-172/U shall be used. Main cable microphone branch shall terminate in a U-172/U female.

3.5.6 Headsets with complex switching or output circuits. Headsets and headset-microphones with complex switching or output circuits shall be as specified (see 3.1).

3.5.7 Cords, cables, and connectors.

3.5.7.1 Headset cords. Unless otherwise specified (see 3.1), there shall be four cords provided with each headset assembly (see figures 10 and 11), as follows

a. Overhead cord, Interconnect of earphones - This cord may also be used as a separate earphone channel for stereo application.
b. Microphone boom cord - (see 3.1).
c. Earcup microphone cord - (see 3.1).

Downloaded from http://www.everyspec.com

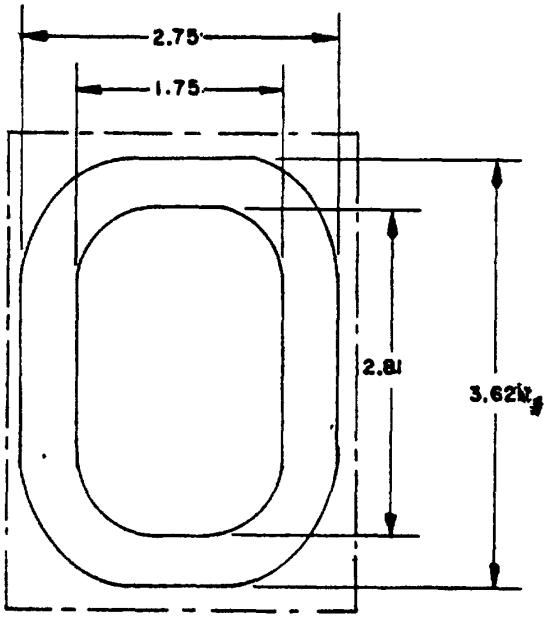

INCHES	MM
1.75	44.4
2.75	69.8
2.81	71.4
3.62	92.0

FIGURE 5. Flange for mounting cushion to earcup.

Downloaded from http://www.everyspec.com

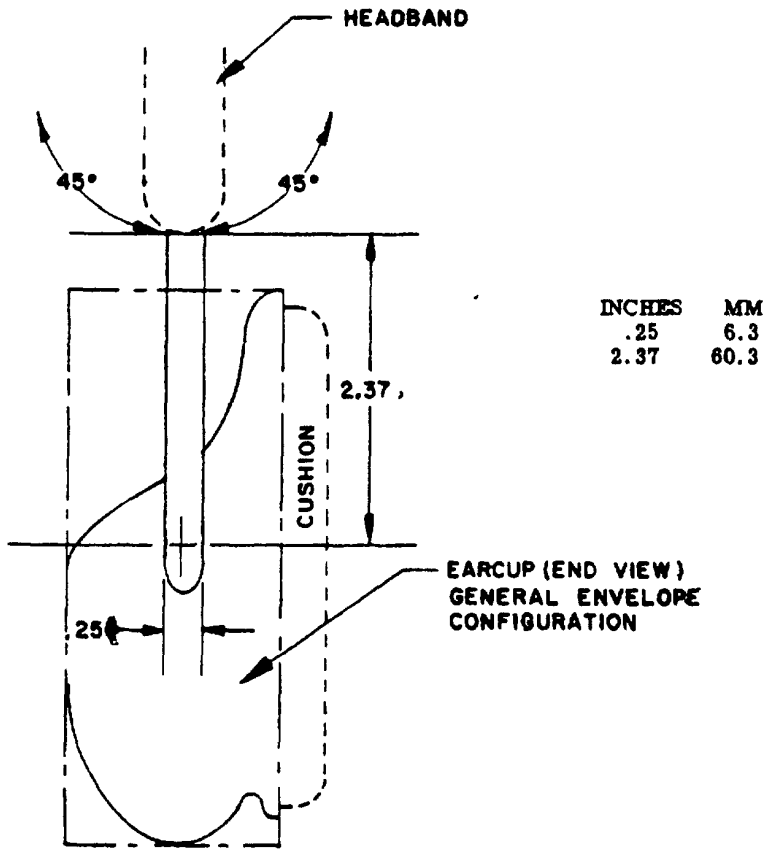

INCHES	MM
.25	6.3
2.37	60.3

FIGURE 6 Interface - stirrup - earcup.

Downloaded from http://www.everyspec.com

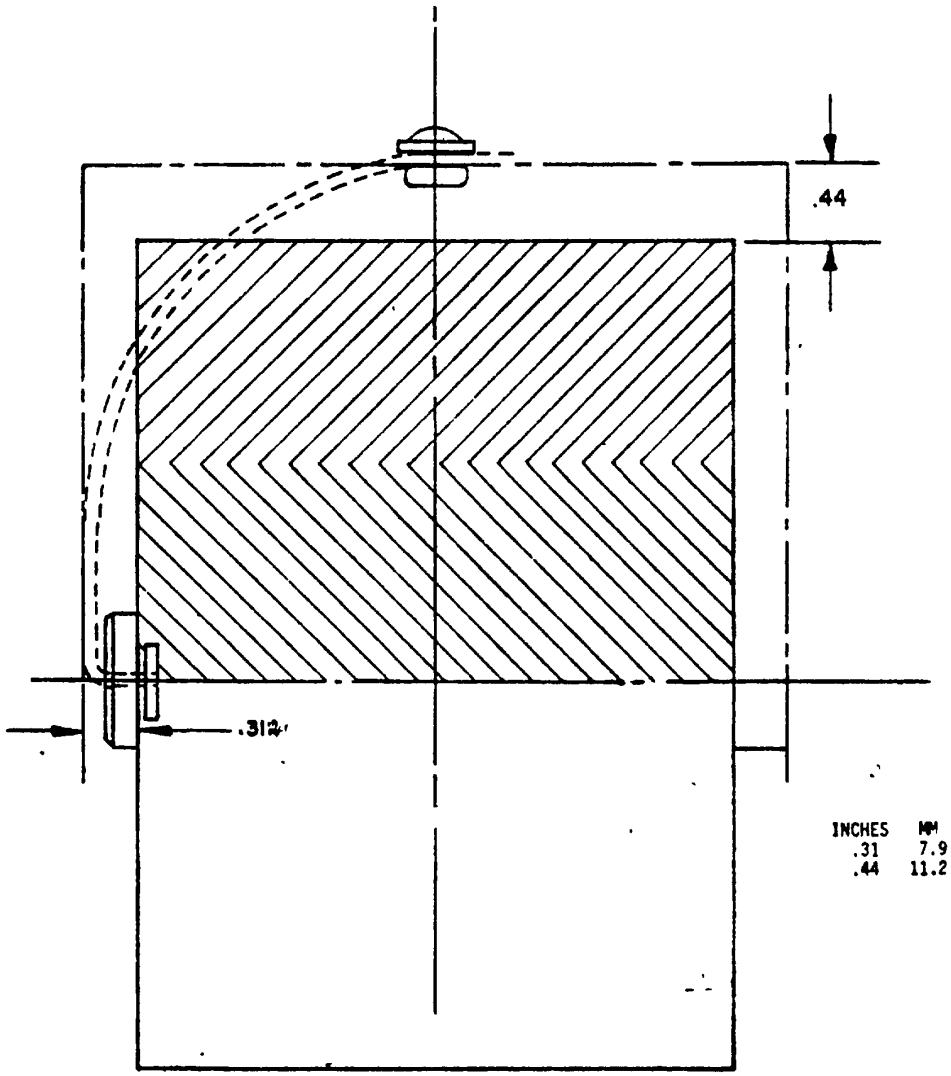

FIGURE 7. Interface yoke headband.

Downloaded from http://www.everyspec.com

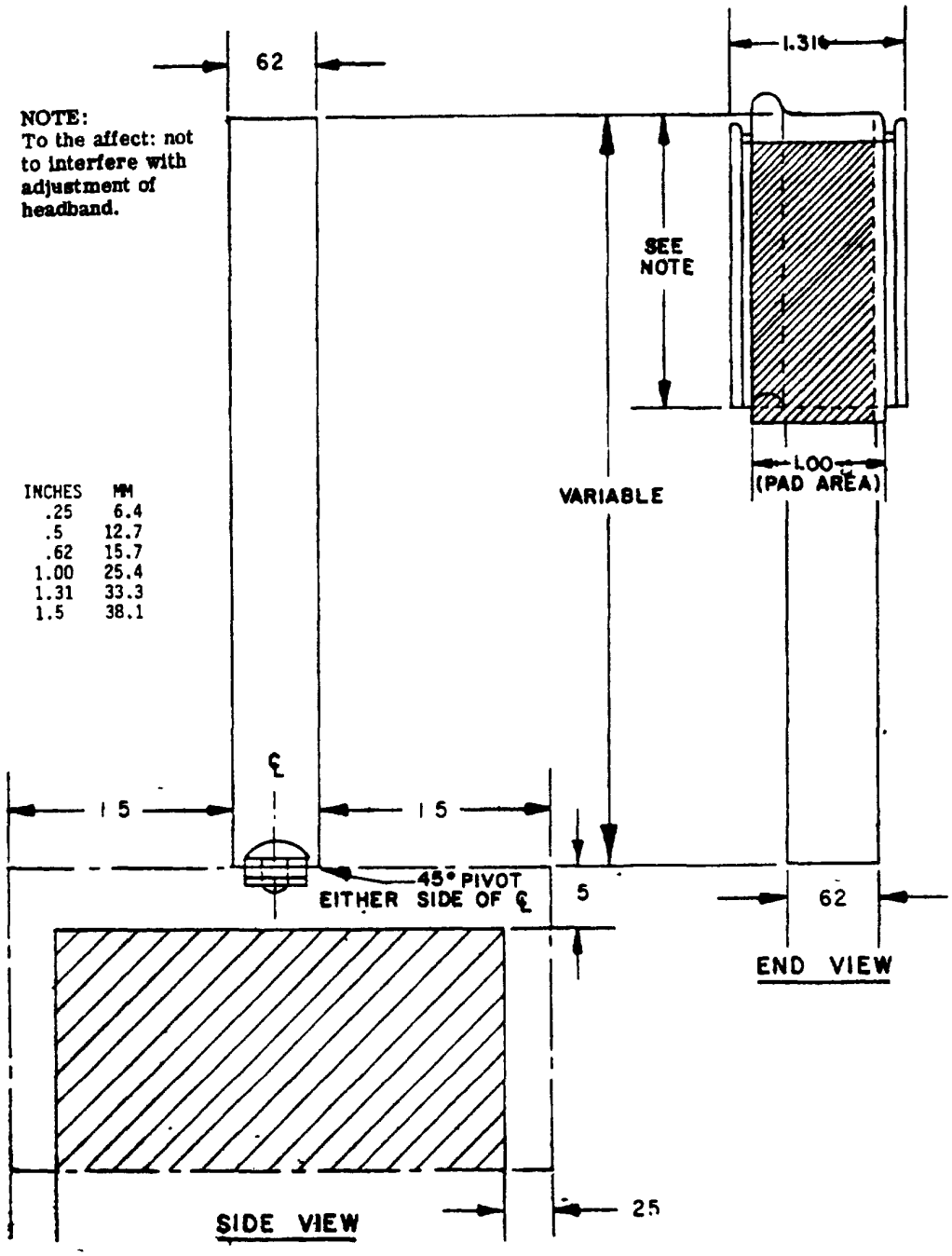

FIGURE 8. Interface yoke headband end view and side view.

Downloaded from http://www.everyspec.com

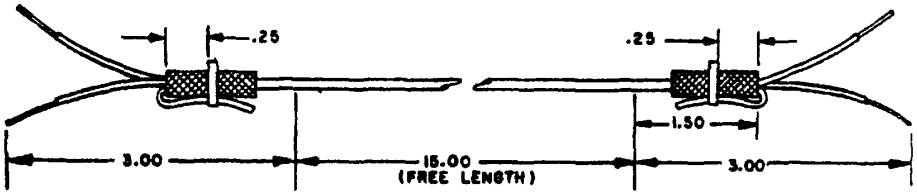

OVERHEAD CORD

NOTE: Should be applicable to all sets.

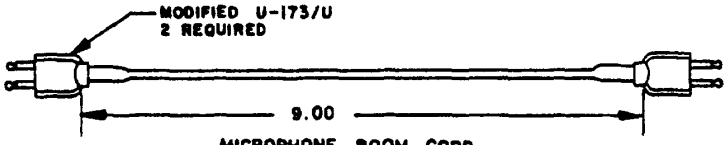

MICROPHONE BOOM CORD

NOTE: This cord should also be applicable to all sets using MIC's.

INCHES	MM
.25	6.4
1.00	25 4
1.50	38.1
3.00	76.2
9.00	228.6
15.00	381.0

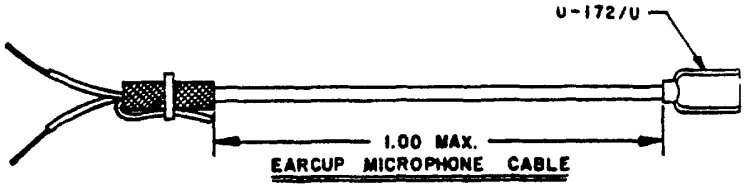

EARCUP MICROPHONE CABLE

NOTES:
1. This cable may be deleted at the option of the manufacturer provided the U-172/U termination is molded into the earcup.
2. The 2 connectors U-172/U and U-173/U are interchangeable with the JJ-055 and P-292 per MIL-J-641/8 and MIL-P-642/7 or CINCH P/N 119547 and 119563 or Nexus P/N MJ-101 and MP-101 or equal. JJ-055 and PJ-292 are QPL items.

FIGURE 9. Minature cable assemblies.

Downloaded from http://www.everyspec.com

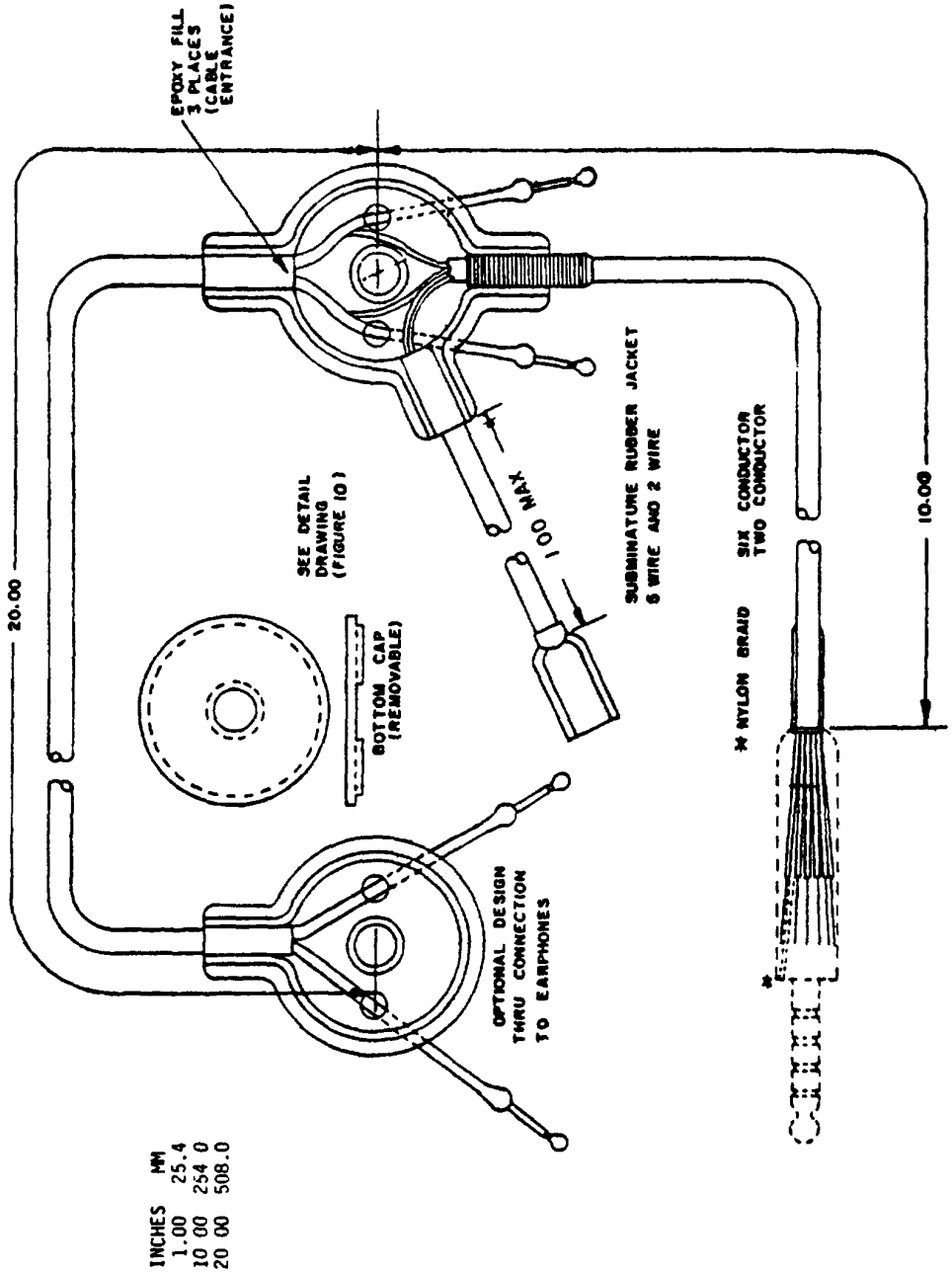

FIGURE 10. Cable layout with block (functional) actual layout at option of manufacturer and the approval of the contracting officer.

Downloaded from http://www.everyspec.com

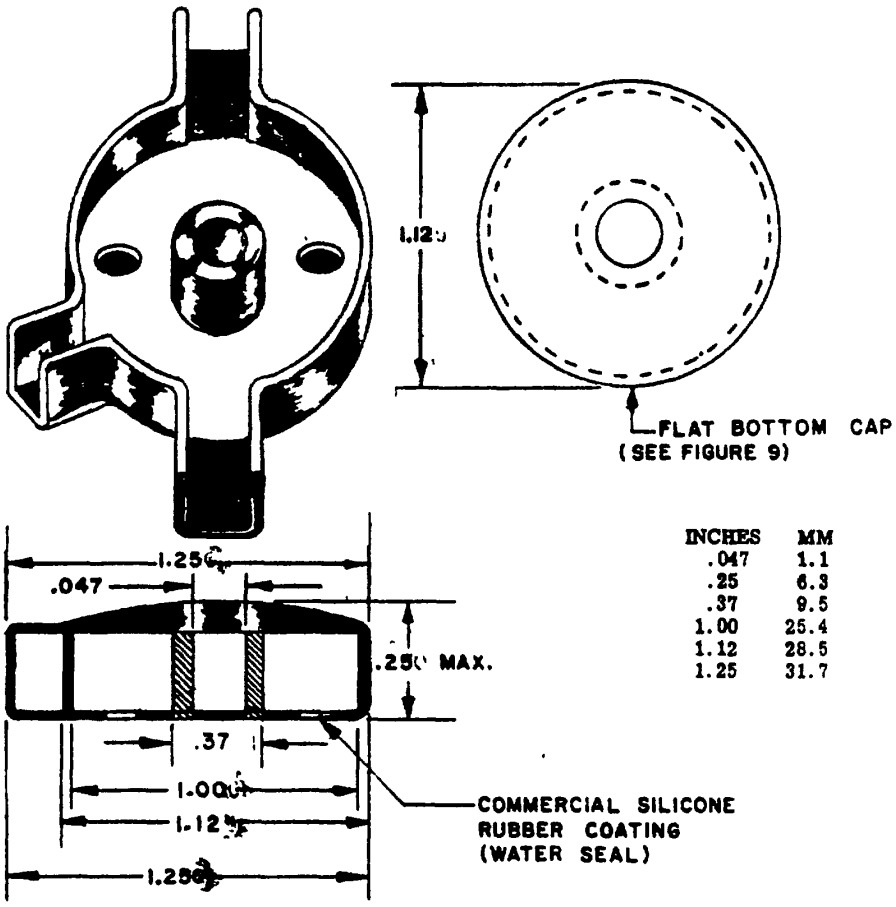

INCHES	MM
.047	1.1
.25	6.3
.37	9.5
1.00	25.4
1.12	28.5
1.25	31.7

FIGURE 11. Cable termination block detail (optional).

Downloaded from http://www.everyspec.com

d. Main cord - Terminus of the three cords above. This cord shall provide input/output circuits to connector U-384/U and mate with a connector U-385/U per MIL-T-81642 and MIL-T-81643.

Cords must conform to MIL-C-55668 for subminiature rubber covered cable.

3.5.7.2 Headset main connector. All headset assemblies covered by this specification shall have their main cords terminated in a type U-384/U, five conductor male plug in accordance with MIL-T-81642, unless otherwise specified (see 3.1).

3.5.7.3 Cordage (see figure 10). The headset shall be provided with an electrical cable connected to each earphone and terminating circuit (to connect a microphone) the other end of which is terminated with a telephone plug type U-384/U. The free length of the cable shall be 10 inches. The branch circuit shall terminate in a U-172/U jack.

3.5.8 Microphone. The microphone used in this equipment shall be the type and design specified (see 3.1) and shall be a product which has passed the component requirements specified (see 4.5).

3.5.9 Microphone mounting.

3.5.9.1 Interface. The microphone bracket and boom shall be as specified in figures 12 and 13.

3.5.9.2 Microphone boom bracket and cable termination mold. Microphone boom bracket and cable termination mold shall be as specified (see figure 14).

3.5.9.3 Microphone boom assembly. Each microphone shall be supplied with its respective boom assembly per table I.

TABLE I. Microphone boom.

Headset-microphone	Boom drawing or specification
H-157A/AIC	Figures 12, 13 and 14
H-172A/AIC	Figures 12, 13 and 14
M83511/7-01	Figures 12, 13 and 14
H-161D/GR	MIL-H-55535

3.5.10 Clothes clip. When specified (see 3.1), the clothing clip shall be as shown in figure 15.

3.5.11 Transistorized amplifier. When specified (see 3.1), the transistorized amplifier shall be type AM 3597 B/A in accordance with MIL-A-23595.

3.5.12 Anthropometry The earcup/earcup cushion/earphone assembly shall be designed and constructed with anthropometric considerations such that the assembly shall accommodate the 1st to 99th percentile user (see figure 16).

3.6 Performance characteristics.

3.6.1 Microphone performance characteristics. Microphones shall meet the requirements specified (see 3.1 and 4.5).

3.6.2 Earphone performance characteristics. Earphones and earphone elements shall meet the requirements specified (see 3.1 and 4.5).

3.6.3 Performance characteristics of headset and headset-microphone.

3.6.3.1 Sound attenuation. When the equipment is tested as specified in 4.8.4.1, it shall meet the attenuation requirements specified in figure 17, and shall be recorded in the "mean" and "standard deviation" format.

Downloaded from http://www.everyspec.com

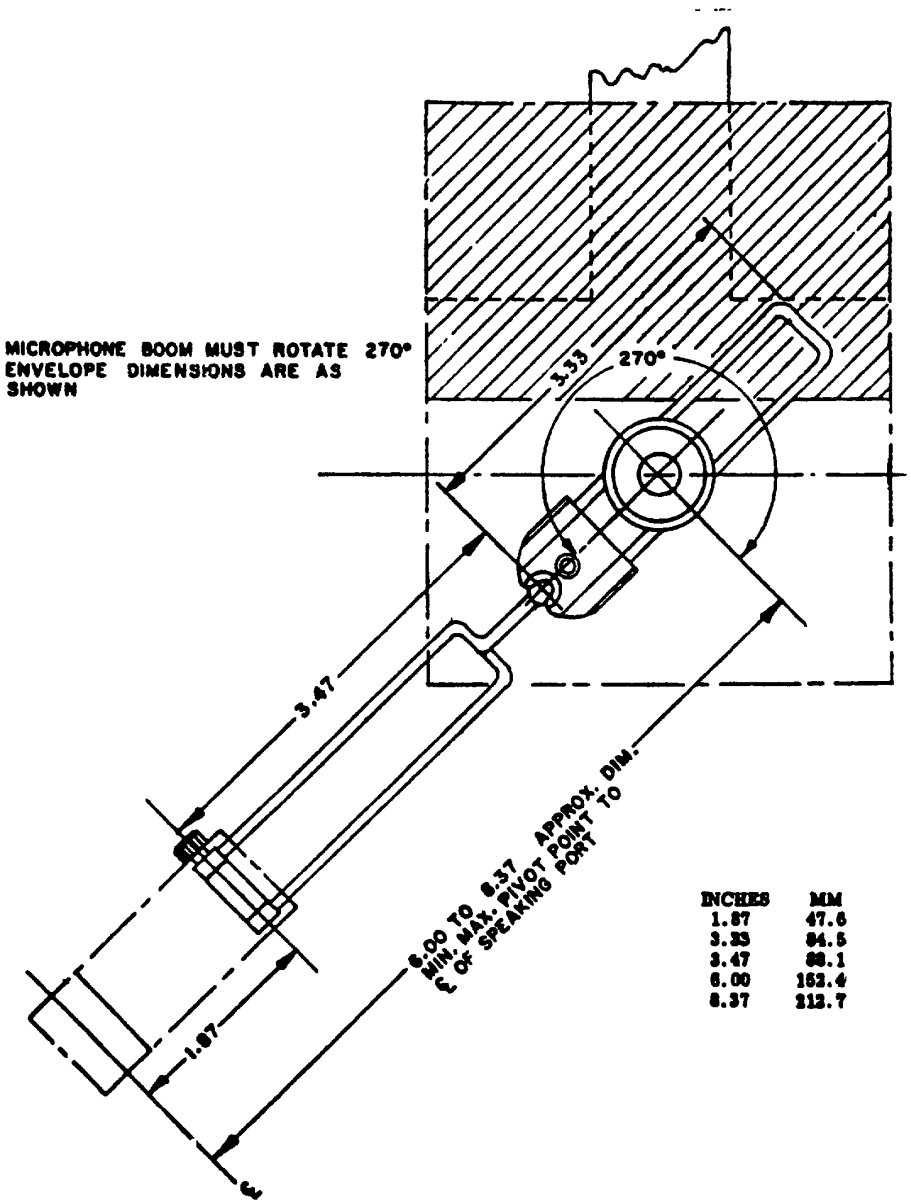

INCHES	MM
1.87	47.6
3.33	84.5
3.47	88.1
6.00	152.4
8.37	212.7

FIGURE 12. Interface of microphone boom bracket with cup adjustability.

Downloaded from http://www.everyspec.com

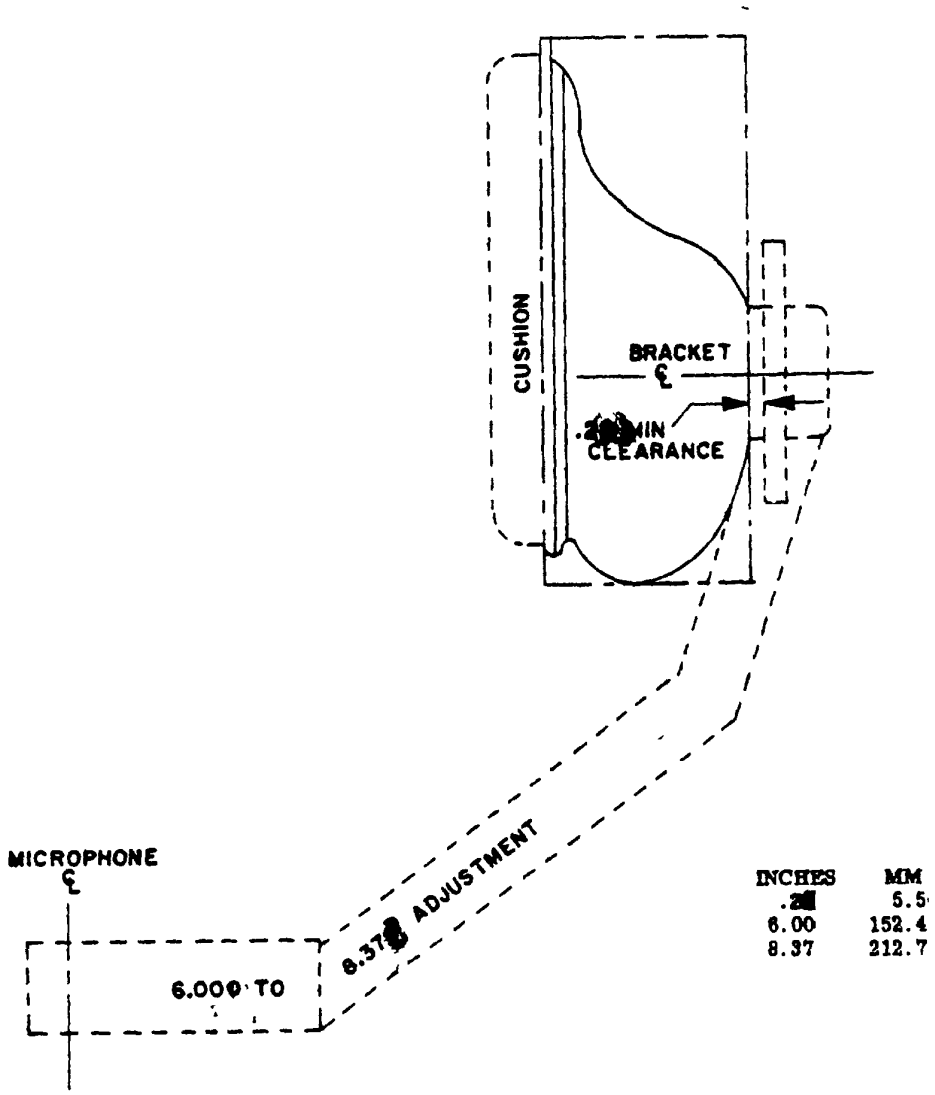

FIGURE 13. Interface of cup with boom and boom bracket (positioning with lips of speaker).

Downloaded from http://www.everyspec.com

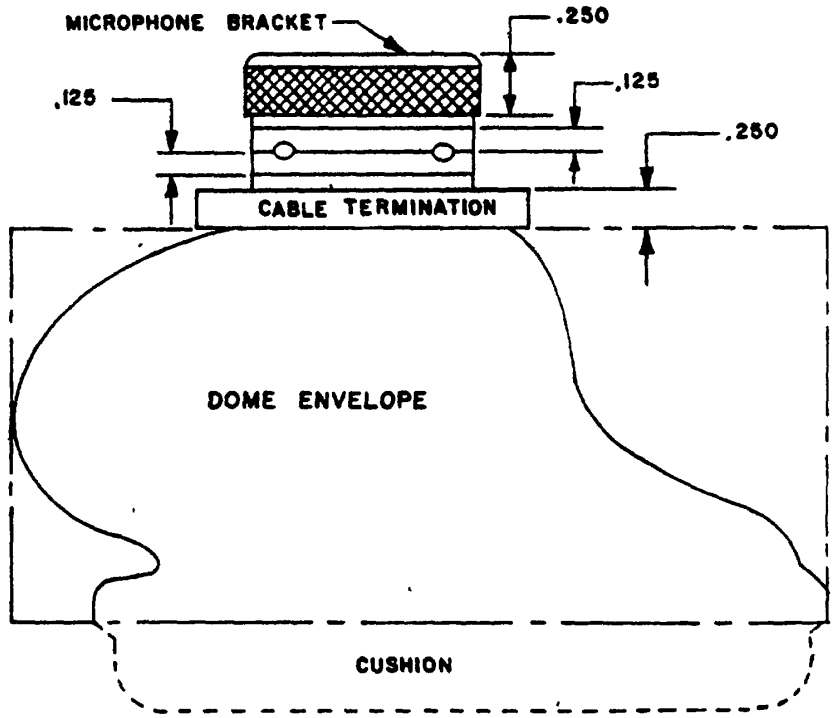

INCHES	MM
.125	3.1
.250	6.3

FIGURE 14. Microphone boom bracket and cable termination mold.

Downloaded from http://www.everyspec.com

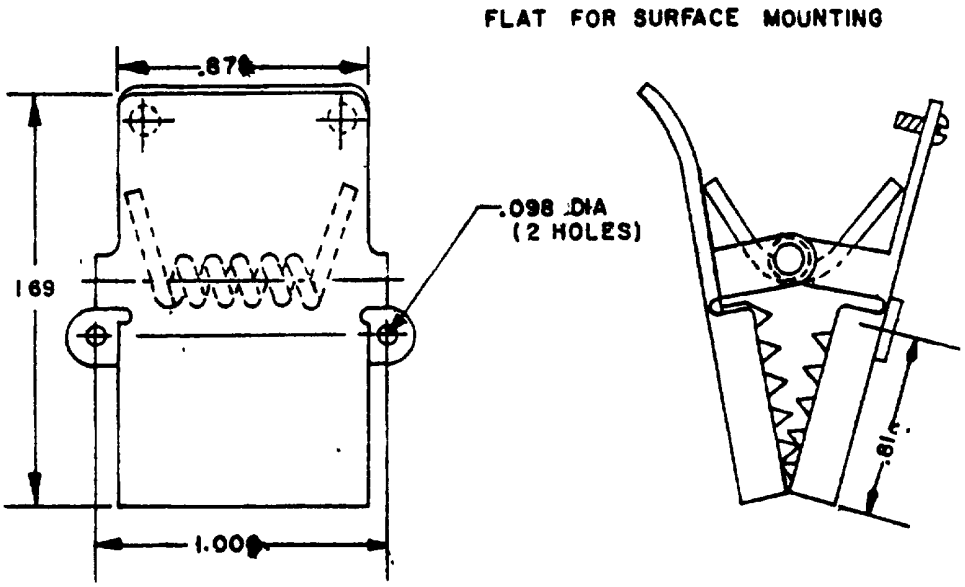

INCHES	MM
.098	2.4
.297	7.5
.31	7.9
.81	20.6
.87	22.2
1.00	25.4
1.69	42.8

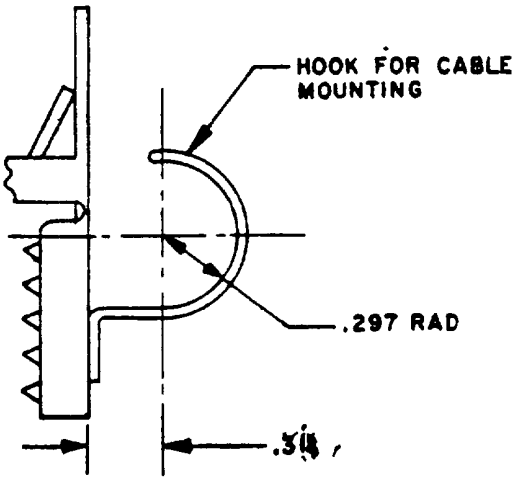

NOTE:
Clothes clip shall be fastened to switch or cord assembly using appropriate attachment feature.

FIGURE 15. Clothes clip

Downloaded from http://www.everyspec.com

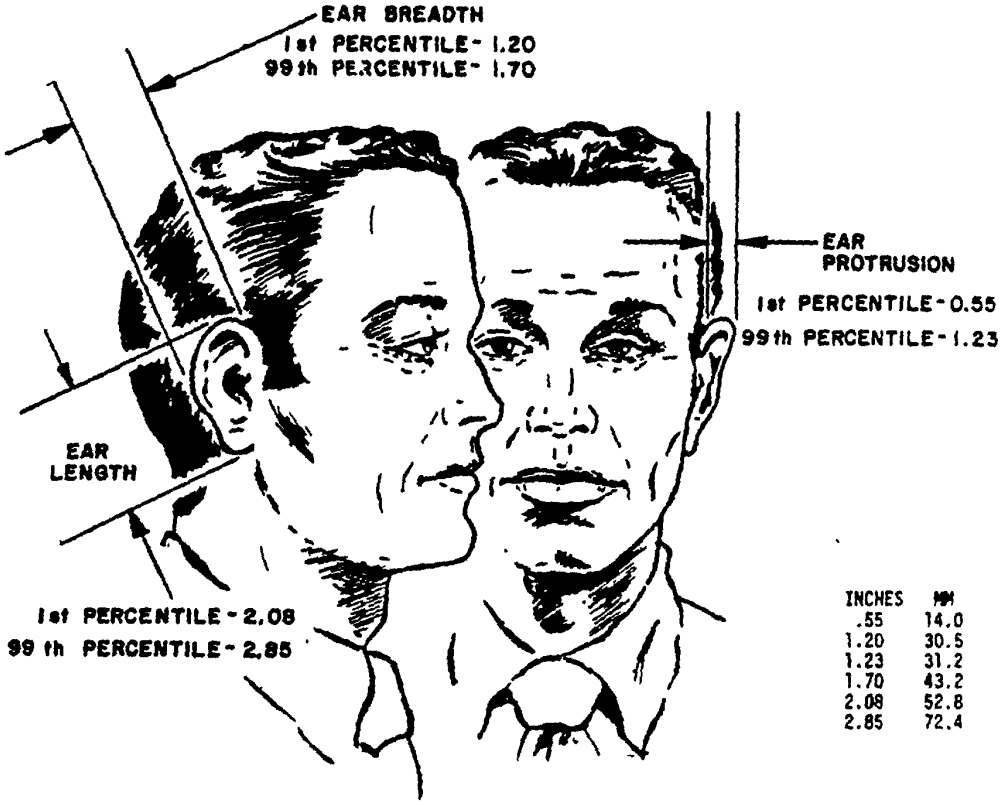

INCHES	MM
.55	14.0
1.20	30.5
1.23	31.2
1.70	43.2
2.08	52.8
2.85	72.4

NOTES.
1. Dimensions are in inches.
2. Metric equivalents are given for general information only and are based upon 1.00 inch = 25.4 mm.

FIGURE 16. Anthropometric measurements.

Downloaded from http://www.everyspec.com

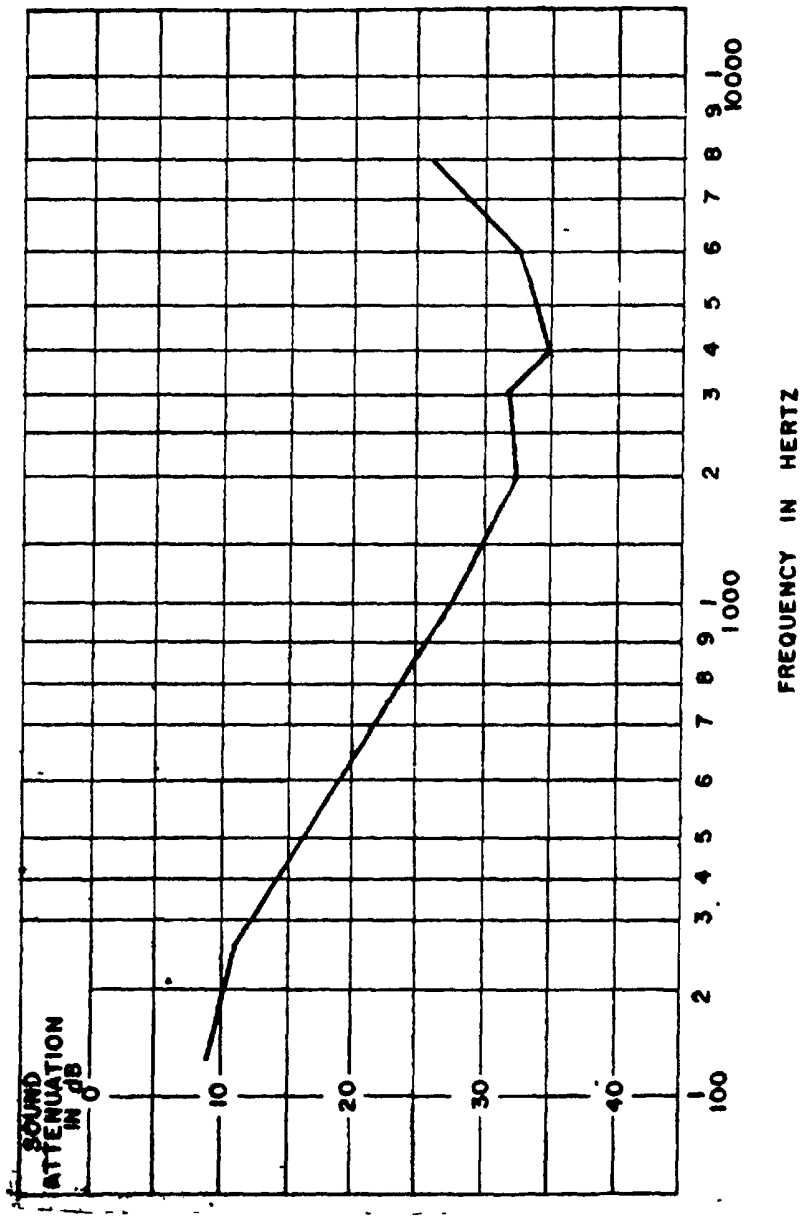

FIGURE 17. Real ear attenuation at threshold

Downloaded from http://www.everyspec.com

3.6.3.2 Talk. When tested as specified in 4.8.4.2, the headset or headset-microphone shall operate satisfactorily. The words will sound clear and distinct.

3.6.3.3 Slide adjustment. When the headset is tested as specified in 4.8.4.3, the assembly shall have a smooth, snug, push fit on the rod. A force of 25 to 75 ounces shall be required to move the rod in the sub-assembly.

3.6.3.4 Strain relief. When the headset is tested as specified in 4.8.4.4, there shall be no slippage of the cord or cable assembly out of the plug.

3.6.3.5 Random drop. When tested as specified in 4.8.4.5, there shall be no loosening or deformation of parts or other damage to the headset. The headset shall meet the requirements for talk, 3.6.3.2 and visual and mechanical inspections in accordance with 3.1, 3.3, 3.4, 3.5, 3.7 and 3.8.

3.6.3.6 Fungus. When tested, as specified in 4.8.4.6, the headset-microphone shall show no evidence of mechanical failure. There shall be no flaking or peeling, and the talk requirements of 3.6.3.2 shall be met.

3.6.3.7 Vibration. When tested as specified in 4.8.4.7, there shall be no loose parts or evidence of mechanical failure, and the talk requirements of 3.6.3.2 shall be met.

3.6.3.8 Temperature. When tested as specified in 4.8.4.8, there shall be no parts cracked or deformed due to extreme temperature and the talk requirements of 3.6.3.2 shall be met.

3.6.3.9 Temperature shock. When tested as specified in 4.8.4.9, there shall be no cracked or deformed parts due to extreme heat, and the talk requirements of 3.6.3.2 shall be met.

3.6.3.10 Humidity. When tested as specified in 4.8.4.10, there shall be no failure due to moisture or corrosion, and the talk requirements of 3.6.3.2 shall be met.

3.6.3.11 Shock. When tested as specified in 4.8.4.11, there shall be no failure due to broken or deformed parts, and the talk requirements of 3.6.3.2 shall be met.

3.6.3.12 Salt fog. When tested as specified in 4.8.4.12, there shall be no failure due to corrosion, and the talk requirements of 3.6.3.2 shall be met.

3.6.3.13 Speech intelligibility. When tested as specified in 4.8.4.13, the earcup with the earphone shall provide a word intelligibility score that could be expected from a distortion-free communications system with a minimum A.I. (articulation index) of 0.35.

3.6.4 Performance characteristics of switch. When specified (see 3.1), the switch shall meet the following requirements:

3.6.4.1 Life. The switch shall be capable of 200,000 operations without a failure when tested in accordance with 4.8.5.1.

3.6.4.2 Actuator force. The force necessary, when exerted on the flat part of the bar, to activate the switch positions shall be as follows when tested in accordance with 4.8.5.2.

a. Positions 1 and 2. The force required to maintain these positions when exerted on the flat part of the bar, at the beginning of the radius, shall be from 1 to 2 pounds.
b. Position 3. The force required to maintain this position shall be from 1-1/2 to 2-1/2 pounds.

Downloaded from http://www.everyspec.com

3.6.4.3 Contact sequence. The switch shall provide operation in sequence (see figure 18) as follows

a. Off position. Switch not depressed, for monitoring telephone or radio.
b. Position 1. Closed halfway, nonlocking, for "push-to-talk" telephone operation.
c. Position 2. Closed halfway, pushed forward, for "lock-on" telephone operation.
d. Position 3. Closed all the way, nonlocking, for radio remote control.

3.6.4.4 Switch details (see figure 18). The switch mechanism shall be made as follows:

a. Off position. Without pressure on the switch, the contact gaps shall be 0.02 inch minimum.
b. Positions 1 and 2. The open contact shall have a gap of 0.015 inch minimum. The closed contact shall develop a minimum of 15 grams force.
c. Position 3. Both contacts shall be closed. The total force developed shall be 25 grams, minimum.

3.6.4.5 Contact resistance. When tested as specified in 4.8.5.3, the contact resistance shall not be over 0.05 ohm.

3.6.5 Performance of cable.

3.6.5.1 Flexing life (cable). When tested as specified in 4.8.5.4, the six-conductor cable shall have a mean flex life of 50,000 flexes and the two-conductor cable shall have a mean flex life of 25,000 flexes without showing evidence of damage to the insulation of the individual conductors and electrical discontinuity.

3.6.5.2 Isolation (cable). When tested as specified in 4.8.5.5, the electromagnetic and electrostatic isolation between the headset circuit and microphone circuit of the cable assembly shall not be less than that shown in table II.

TABLE II. Isolation.

Frequency in Hz	Electrostatic isolation less connector	Electromagnetic isolation with connector
20,000	115 dB	86 dB
10,000	121 dB	92 dB
5,000	127 dB	98 dB

3.7 Marking. Headsets and headset-microphones shall be marked in accordance with MIL-STD-1285 with the type designation and manufacturer's code symbol or name.

3.8 Workmanship. Headsets shall be processed in such a manner as to be uniform in quality and shall be free from loose or deposited foreign materials, and other defects that will affect life, serviceability, or appearance.

4. QUALITY ASSURANCE PROVISIONS

4.1 Responsibility for inspection. Unless otherwise specified in the contract, the contractor is responsible for the performance of all inspection requirements as specified herein. Except as otherwise specified in the contract, the contractor may use his own or any other facilities suitable for the performance of the inspection requirements specified herein unless disapproved by the Government. The Government reserves the right to perform any of the inspections set forth in the specification where such inspections are deemed necessary to assure supplies and services conform to prescribed requirements.

Downloaded from http://www.everyspec.com

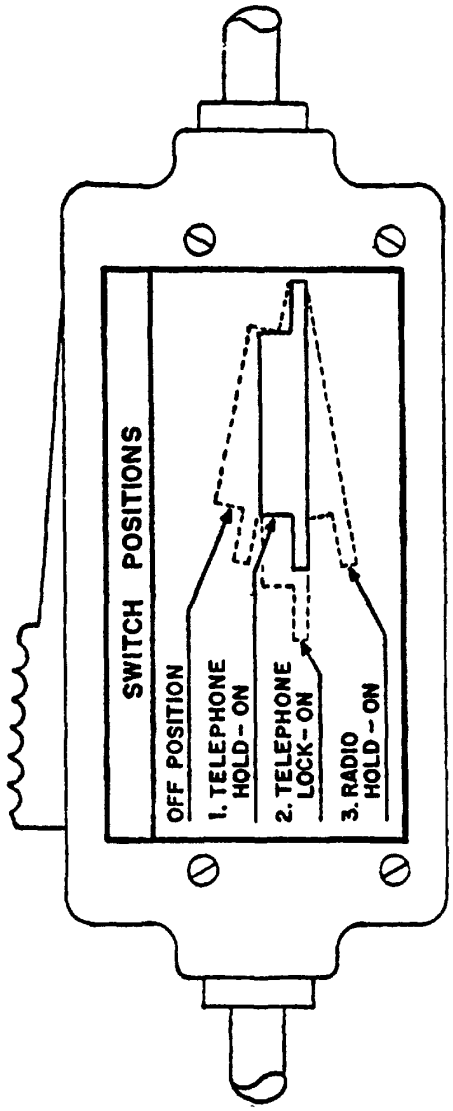

FIGURE 18. Switch.

Downloaded from http://www.everyspec.com

4.1.1 Test equipment and inspection facilities. Test and measuring equipment and inspection facilities of sufficient accuracy, quality and quantity to permit performance of the required inspection shall be established and maintained by the contractor. The establishment and maintenance of a calibration system to control the accuracy of the measuring and test equipment shall be in accordance with MIL-C-45662.

4.2 Classification of inspections. The inspections specified herein are classified as follows:

a. Materials inspection (see 4.3).
b. Components inspection (see 4.5).
c. Qualification inspection (see 4.6).
d. Quality conformance inspection (see 4.7).

4.3 Materials inspection. Materials inspection shall consist of certification supported by verifying data that the materials listed in table III, used in fabricating the equipment, are in accordance with the applicable referenced specifications prior to such fabrication.

TABLE III. Materials inspection.

Materials	Requirement paragraph	Applicable specification
Insulating and Jacket compounds for cords	3.4.1	MIL-I-4997
Polyurethane foam	3.4.2	MIL-P-26514
Solder flux	3.4.3	MIL-F-14256

4.4 Inspection conditions. Unless otherwise specified, all inspections shall be performed under the following conditions

Temperature - Room ambient, +15°C (+59°F) to +35°C (+95°F).
Pressure - Normal atmospheric.
Humidity - Room ambient up to 90 percent relative humidity.

All acoustical testing shall be made in a free field environment.

4.5 Components inspection. Components inspection shall consist of certification supported by verifying data that the components listed in table IV, used in the headsets, are in accordance with the applicable referenced specification.

TABLE IV. Components inspection

Component	Requirements	Applicable specification
Earphones		
H-143/AIC	MIL-H-XXX/2	MIL-E-25670
EV-993	MIL-H-XXX/1	EV-993
R-10357	MIL-H-XXX/5	MIL-H-83511
H-269/G	MIL-H-XXX/5	MIL-H-55535
M83510	MIL-H-XXX/7	MIL-E-83510
Microphones		
M-87/AIC	MIL-H-XXX/2	MIL-M-26542/2
M-138/G	MIL-H-XXX/4	MIL-H-55535
M26542/1-01	MIL-H-XXX/7	MIL-M-26542/1
Connectors, jacks and plugs		
JJ055	MIL-H-83511	MIL-J-641/8
U-172/U	MIL-H-83511	Nexus Inc. equiv. of JJ-055
U-173/U	MIL-H-83511	Nexus Inc. equiv. of PJ-292
U-229/U	MIL-H-83511/1	MIL-C-55116
10-109614-SP	MIL-H-83511/4	Amphenol
U-384/U	MIL-H-83511/2,/3,/4,/5,/7	MIL-T-81642
U-385/U	MIL-H-83511/2,/4	MIL-T-81643

Downloaded from http://www.everyspec.com

4.6 Qualification inspection. Qualification inspection shall be performed at a laboratory acceptable to the Government (see 6.2) on sample units produced with equipment and procedures normally used in production.

4.6.1 Sample size. Six earphones, microphones, headsets, and headset-microphones shall be subjected to the qualification inspection.

4.6.2 Inspection routine. The sample shall be subjected to the inspections specified in table V, in the order shown. All sample units shall be subjected to the inspection of group I. The sample shall then be divided equally into two groups of three units each, and subjected to the inspections for their particular group.

4.6.3 Failures. One or more failures shall be cause for refusal to grant qualification approval.

TABLE V. Qualification inspection.

Inspection	Requirement paragraph	Test method paragraph	Sample units
Group I (microphones)	3.5.8	3.1	3
Group II (earphone element)	3.5.3.6	3.1	3
Group III (headsets and headset-microphones)			
Visual and mechanical examination	3.1, 3.3, 3.4, 3.5, 3.7 and 3.8	4.8.1	
Sound attenuation	3.6.3.1	4.8.4.1	
Talk	3.6.3.2	4.8.4.2	
Slide adjustment	3.6.3.3	4.8.4.3	6
Strain relief	3.6.3.4	4.8.4.4	
Random drop	3.6.3.5	4.8.4.5	
Speech intelligibility	3.6.3.13	4.8.4.13	
Group IV			
Fungus	3.6.3.6	4.8.4.6	
Vibration	3.6.3.7	4.8.4.7	
Temperature	3.6.3.8	4.8.4.8	
Temperature shock	3.6.3.9	4.8.4.9	
Humidity	3.6.3.10	4.8.4.10	3
Shock	3.6.3.11	4.8.4.11	
Salt fog	3.6.3.12	4.8.4.12	
Speech intelligibility	3.6.3.13	4.8.4.13	
Group V			
(switch)			
Life	3.6.4.1	4.8.5.1	
Actuator force	3.6.4.2	4.8.5.2	
Contact resistance	3.6.4.5	4.8.5.3	3
(cable)			
Flexing life	3.6.5.1	4.8.5.4	
Isolation	3.6.5.2	4.8.5.5	

Downloaded from http://www.everyspec.com

4.6.4 Retention of qualification. To retain qualification, the contractor shall forward a report at 12-month intervals to the qualifying activity. The qualifying activity shall establish the initial reporting date. The report shall consist of

a. A summary of the results of the tests performed for inspection of product for delivery, group A, indicating as a minimum the number of lots that have passed and the number that have failed. The results of tests of all reworked lots shall be identified and accounted for.
b. A summary of the results of tests performed for periodic inspection, group C, including the number and mode of failures. The summary shall include results of all periodic inspection tests performed and completed during the 12-month period. If the summary of the test results indicates nonconformance with specification requirements, and corrective action acceptable to the qualifying activity has not been taken, action may be taken to remove the failing product from the qualified products list.

Failure to submit the report within 30 days after the end of each 12-month period may result in loss of qualification for the product. In addition to the periodic submission of inspection data, the contractor shall immediately notify the qualifying activity at any time during the 6-month period that the inspection data indicates failure of the qualified product to meet the requirements of this specification.

In the event that no production occurred during the reporting period, a report shall be submitted certifying that the company still has the capabilities and facilities necessary to produce the item. If during two consecutive reporting periods there has been no production, the manufacturer may be required, at the discretion of the qualifying activity, to submit the earphones to testing in accordance with the qualification inspection requirements.

4.7 Quality conformance inspection.

4.7.1 Inspection of product for delivery. Inspection of product for delivery shall consist of groups A and B inspections.

4.7.1.1 Inspection lot. An inspection lot shall consist of all earphones and microphones of the same type produced under essentially the same conditions, and offered for inspection at one time.

4.7.1.2 Group A inspection. Group A inspection shall consist of the inspection specified in table VI.

4.7.1.2.1 Sampling plan. Statistical sampling and inspection shall be in accordance with MIL-STD-105 for general inspection level II. The acceptable quality level (AQL) shall be as specified in table VI. Major and minor defects shall be as defined in MIL-STD-105.

TABLE VI. Group A inspection.

Inspection	Requirement paragraph	Test method paragraph	AQL (percent defective)	
			Major	Minor
Visual and mechanical examination	3.1, 3.3, 3.4, 3.5, 3.7 and 3.8	4.8.1	1.0	4.0

4.7.1.2.2 Rejected lots. If an inspection lot is rejected, the contractor may rework it to correct the defects, or screen out the defective units, and resubmit for reinspection. Resubmitted lots shall be inspected using tightened inspection. Such lots shall be separate from new lots, and shall be clearly identified as reinspected lots.

4.7.1.3 Group B inspection. Group B inspection shall consist of the inspection specified in table VII and shall be made on sample units which have been subjected to and have passed the group A inspection.

Downloaded from http://www.everyspec.com

TABLE VII. Group B inspection.

Inspection	Requirement paragraph	Test method paragraph
Slide adjustment	3.6.3.3	4.8.4.3

4.7.1.3.1 Sampling plan. The sampling plan shall be in accordance with MIL-STD-105 for special inspection level S-4. The sample size shall be based on the inspection lot size from which the sample was selected for group A inspection. The AQL shall be 2.5 percent defective.

4.7.1.3.2 Rejected lots. If an inspection lot is rejected, the contractor may rework it to correct the defects, or screen out the defective units, and resubmit for reinspection. Resubmitted lots shall be inspected using tightened inspection. Such lots shall be separate from new lots, and shall be clearly identified as reinspected lots.

4.7.1.3.3 Disposition of sample units. Sample units which have passed the group B inspection may be delivered on the contract or purchase order, if the lot is accepted and the sample units are still within specified electrical tolerances.

4.7.2 Periodic inspection. Periodic inspection shall consist of group C inspection. Except where the results of these inspections show noncompliance with the applicable requirements (see 4.7.2.1.4), delivery of products which have passed groups A and B inspections shall not be delayed pending the results of these periodic inspections.

4.7.2.1 Group C inspection. Group C inspection shall consist of the inspections specified in table VIII, in the order shown. Group C inspection shall be made on sample units selected from inspection lots which have passed the groups A and B inspections.

TABLE VIII. Group C inspection.

Inspection	Requirement paragraph	Test method paragraph
Fungus	3.6.3.6	4.8.4.6
Vibration	3.6.3.7	4.8.4.7
Temperature	3.6.3.8	4.8.4.8
Temperature shock	3.6.3.9	4.8.4.9
Humidity	3.6.3.10	4.8.4.10
Shock	3.6.3.11	4.8.4.11
Salt fog	3.6.3.12	4.8.4.12
(switch)		
Life	3.6.4.1	4.8.5.1
Actuator force	3.6.4.2	4.8.5.2
Contact resistance	3.6.4.5	4.8.5.3

4.7.2.1.1 Sampling plan. Four sample units shall be selected from each 2-months production, or each 1,000 units, whichever occurs first, after date of notification of qualification.

4.7.2.1.2 Failures. If one or more sample units fail to pass group C inspection, the sample shall be considered to have failed. When an item selected from a production run fails to meet the specification, no items still on hand or later produced shall be accepted until the extent and cause of failure have been determined and appropriately corrected. The contractor shall explain to the Government representative the cause of failure and the action taken to preclude recurrence. After correction, all the tests shall be repeated.

4.7.2.1.3 Disposition of sample units. Sample units which have been subjected to group C inspection shall not be delivered on the contract or purchase order.

Downloaded from http://www.everyspec.com

4.7.2.1.4 Noncompliance. If a sample fails to pass group C inspection, the manufacturer shall notify the qualifying activity and the cognizant inspection activity of such failure and take corrective action on the materials or processes, or both, as warranted, and on all units of product which can be corrected and which were manufactured using essentially the same materials and processes, and which are considered subject to the same failure. Acceptance and shipment of the product shall be discontinued until corrective action, acceptable to the qualifying activity has been taken. After the corrective action has been taken, group C inspection shall be repeated on additional sample units (all inspections, or the inspection which the original sample failed, at the option of the qualifying activity) Groups A and B inspections may be reinstituted, however, final acceptance and shipment shall be withheld until the group C inspection has shown that the corrective action was successful. In the event of failure after reinspection, information concerning the failure shall be furnished to the cognizant inspection activity and the qualifying activity.

4.7.3 Inspection of packaging. The sampling and inspection of the preservation-packaging and interior package marking shall be in accordance with the group A and B quality conformance inspection requirements of MIL-P-116. The sampling and inspection of the packing and marking for shipment and storage shall be in accordance with the quality assurance provisions of the applicable container specification and the marking requirements of MIL-STD-129.

4.8 Methods of examination and test.

4.8.1 Visual and mechanical examination. Headsets shall be examined to verify that the materials, design, construction, physical dimensions, markings, and workmanship are in accordance with the applicable requirements (see 3.1, 3.3, 3 4, 3.5, 3.7, and 3.8).

4.8.2 Microphone examination and tests. The examination and tests of each type of microphone shall be performed in accordance with the specification or testing procedures specified for that type (see 3.1).

4.8.3 Earphone examination and tests. The examination and tests of each type of earphone or earphone element shall be performed in accordance with the specification or testing procedures specified for that type (see 3.1).

4.8.4 Examination and tests of headsets and headset-microphones.

4.8.4.1 Sound attenuation (see 3.6.3.1).

a. Using a free field environment the subject shall be seated in a chair with a head rest at a fixed distance from a loudspeaker in order to minimize the undesirable effects of standing waves. All subjective tests shall be conducted with the subject's head against the head rest. Subjects shall be instructed not to raise their arms during the pure tone presentations so as not to change their sound diffraction patterns.
b. Prior to running the subjective tests, it is necessary to calibrate the sound pressure in the test room. A WECO 640AA condenser microphone or a demonstrated equivalent shall be used in the sound field to calibrate the sound pressure level of the white noise at each test frequency. The calibrating microphone may be used throughout the attenuation test for direct reading of the sound pressure level at each test frequency.
c. The subject shall be seated as stated in step a. and, without the headset on, shall adjust the pressure level of the pure tone sound until it is just audible and the level is recorded. Then the subject shall don the headset and assure that the earcups are properly fitted over the ears to make a good seal. The subject shall readjust the pressure level of ears to make a good seal. The subject shall readjust the pressure level of the tone until the sound is again just audible. The change in level of the sound in decibels is the attenuation provided by the earcups of the headset.

Downloaded from http://www.everyspec.com

d. Step c. shall be carried out twice at each of 12 different frequencies in the audio spectrum: 100, 250, 500, 750, 1000, 1500, 2000, 2500, 3000, 4000, 5000, and 6000 Hz. The test frequencies need not be used in the order listed.

e. Step c. shall be repeated with a minimum of five subjects. Their ages shall be between 20 and 40 years and they shall have no hearing deficiency. At each test frequency the electrical attenuation required to make the two tones sound equally loud shall be averaged for all of the subjects. These arithmetical means shall be plotted as shown in figure 17. The electrical attenuation is equal to the acoustical attenuation or sound insulation of the headset.

4.8.4.2 Talk (see 3.6.3.2).

4.8.4.2.1 Headset. A microphone M-87/AIC shall be connected to the microphone jack of the headset cable. The main cable connector on the headset shall be inserted into a mating connector which has the earphone contacts connected to the output of an amplifier of suitable gain and the microphone contacts to the input of the same amplifier. During this test, the talker shall listen to his own voice while speaking into the microphone to insure that the headset is functioning satisfactorily.

4.8.4.2.2 Headset-microphone. The test specified in 4.8.4.1 shall be performed except the microphone normally used on the headset-microphone shall be used.

4.8.4.3 Slide adjustment (see 3.6.3.3). The headset shall be clamped in a secure position and in such a manner to allow the rods of the receiver holder to move freely. The rods shall be placed in the compressed position, and the force required to move the rod to the extended position shall be measured. The force required to return the rod to the compressed position shall be measured. A spring scale with a hook or any other suitable method that is agreeable with the contracting officer may be used to measure the force.

4.8.4.4 Strain relief (see 3.6.3.4). The cord conductors shall be detached from the plug. The jacket of the cord or cable assembly shall be suitably marked adjacent to the end of the plug or clamp and its position relative to the end of the plug noted. The plug shall be securely held or clamped, and a force shall be applied to the cord in a direction tending to withdraw the cord from the plug. The force shall be increased gradually to 12 pounds and held at that value for 10 seconds. A change in position of the jacket marking relative to the end of the plug shall be considered as evidence of slippage of the cord or cable assembly out of the plug.

4.8.4.5 Random drop (see 3.6.3.5). The entire headset shall be cooled to a temperature of -40°F and dropped a total of 12 times on a concrete floor a distance of 6 feet above the floor. At the discretion of the contractor, the floor may be covered with one layer of floor tile. The headset shall be dropped at least one time in each of three planes. Upon completion of the test, the talk test in accordance with 4.8.4.2 and visual and mechanical examination in accordance with 4.8.1 shall be performed.

4.8.4.6 Fungus (see 3.6.3.6). At the option of the contractor, the contractor shall certify that the materials meet the requirements of MIL-STD-454 for fungus resistant materials, or test method 510 of MIL-STD-810 shall be performed. Upon completion of the test the surface shall be examined for flaking and peeling. The talk test shall be performed.

4.8.4.7 Vibration (see 3.6.3.7). The headset or headset-microphone shall be tested in accordance with test method 201 of MIL-STD-202. Upon completion of the test the talk test in accordance with 4.8.4.2 and the visual and mechanical examination in accordance with 4.8.1 shall be performed.

4.8.4.8 Temperature (see 3.6.3.8). The headset or headset-microphone shall be tested in accordance with MIL-STD-810, method 501.1, procedure 1 with a storage temperature of -55°C and an operating temperature of -40°C and MIL-STD-810, method 502.1, procedure 1 with a storage temperature of 70°C and an operating temperature of 65°C. Upon completion of the test the talk test in accordance with 4.8.4.2 and the visual and mechanical examination in accordance with 4.8.1 shall be performed.

Downloaded from http://www.everyspec.com

4.8.4.9 Temperature shock (see 3.6.3.9). The headset or headset-microphone shall be tested in accordance with method 503 of MIL-STD-810. Upon completion of the test the talk test in accordance with 4.8.4.2 and the visual and mechanical examination in accordance with 4.8.1 shall be performed.

4.8.4.10 Humidity (see 3.6.3.10). The headset or headset-microphone shall be tested in accordance with method 103 of MIL-STD-202, test condition B. Upon completion of the test the talk test in accordance with 4.8.4.2 and the visual and mechanical examination in accordance with 4.8.1 shall be performed.

4.8.4.11 Shock (see 3.6.3.11). The headset or headset-microphone shall be tested in accordance with test method 213 of MIL-STD-202, test condition A. Upon completion of the test the talk test in accordance with 4.8.4.2 and the visual and mechanical examination in accordance with 4.8.1 shall be performed.

4.8.4.12 Salt fog (see 3.6.3.12). The headset or headset-microphone shall be tested in accordance with test method 101 of MIL-STD-202, test condition B. Upon completion of the test the talk test in accordance with 4.8.4.2 and the visual and mechanical examination in accordance with 4.8.1 shall be performed.

4.8.4.13 Speech intelligibility (see 3.6 3.13). The headset microphone shall be tested in accordance with American National Standards Institute, Inc. S3.5-1969.

4.8.5 Switch. When a switch is specified, it shall be tested as follows

4.8.5.1 Life (see 3.6.4.1). The switch, mounted in its housing and not connected to the cords of the headset-microphone assembly, shall be subjected to 200,000 continual operations at a rate of 40 to 60 complete operations per minute and number of operations monitored by a mechanical counter. A 24-volt dc source with a series resistor adjusted for a current flow of 1/2 ampere shall flow through the switch control circuit contacts and the number of operations monitored by an electrical counter. A 3-volt dc source with a series resistor adjusted for a current flow of 85 milliamperes shall flow through the switch operational (voice) circuit contacts and the number of operations monitored by an electrical counter. Any number of switches may be tested at the same time on the same test fixture. Each switch shall have its own electrical counter, or all the control circuit terminals shall be connected in series to one electrical counter, and all the operational (voice) circuit terminals shall be connected in series to one electrical counter. The switch contacts shall make in the following sequence Position 1 - Monitor Telephone or Radio, Position 2 - Telephone Hold-On, Position 3 - Telephone Lock-On (not during life test), and Position 4 - Radio Hold-On, and break in the reverse order. The electrical counts shall correspond to the mechanical count or the test is considered a failure. The contact sequence shall be the same after the test (4 positions including lock-on) or the test is considered a failure. The switch mounted in the normal operating configuration in the switch housing before life test shall meet the requirements of 3.6.4.2 and 3.6.4.3, and after life test shall not exceed 20 percent degradation of 3.6.4.2 and 3.6.4.3 and shall meet the requirements of 3.6.4.1.

4.8.5.2 Actuator force (see 3.6.4.2). The switch mounted in its normal operating configuration in the handset shall be subjected to a force necessary to close positions 1 and 3 and to hold circuits closed.

4.8.5.3 Contact resistance (see 3.6.4.5). The switch contact resistance shall be measured by means of an electronic volt-ohmmeter which is capable of measuring 0.05 ohm with no more than 5 percent error and shall meet the requirements of 3.6.4.3.

4.8.5.4 Flexing life (cable) (see 3.6.5.1). Three samples of the multiconductor (main headset/microphone cable) unterminated cable shall be clamped and suspended through holes in a metal bar having a cross section of 1/2 inch by 5/8 inch as described below:

a. The clamping point shall be immediately above the metal bar, the cable clamp shall rest on the top of the metal bar.
b. The cable shall be clamped in such a manner that it will not turn in the hole during the flexing test.
c. The length of the through holes in the metal bar shall be 5/8 inch. The diameter of the through holes shall be 0.0005 to 0.010 inch greater than the diameter of the cable which is undergoing test.

Downloaded from http://www.everyspec.com

d. The through holes in the metal bar shall incorporate a 1/8-inch radius at the end from which the cable emerges (bending point).
e. A knot shall be tied near the free end of the cable and a 1-pound weight shall be hung from the knot to maintain the cable in a vertical position.
f. The individual conductors of each sample cable, a small low-current drain 6-volt lamp, and a suitable power source shall be connected in series to indicate electrical continuity. The metal bar, supported horizontally, shall then be rotated about its longitudinal axis back and forth through an angle of 120 degrees (60 degrees each side of vertical) at a rate of approximately 85 Hz. The arithmetical mean of the flexing cycles of the three samples of the cable before electrical discontinuity occurs shall be taken as the flexing of the cable.

4.8.5.5 Isolation (cable) (see 3.6.5.2). The cable shall be tested in accordance with figure 19.

5. PACKAGING

5.1 Preservation-packaging. Preservation-packaging shall be level A or C, as specified (see 6.1).

5.1.1 Level A.

5.1.1.1 Cleaning. Headset assemblies shall be cleaned in accordance with MIL-P-116, process C-1.

5.1.1.2 Drying. Headset assemblies shall be dried in accordance with MIL-P-116.

5.1.1.3 Preservative application. Preservatives shall not be used.

5.1.1.4 Unit packaging. Unless otherwise specified (see 6.1), headset assemblies shall be individually packaged in accordance with MIL-P-116, submethod IA-15, insuring compliance with the general requirements paragraph under methods of preservation (unit protection) and the physical protection requirements paragraph therein. The container shall conform to PPP-B-636.

5.1.1.5 Intermediate packaging. Not required.

5.1.2 Level C. Headset assemblies shall be clean, dry and packaged in a manner that will afford adequate protection against corrosion, deterioration and physical damage during shipment from supply source to the first receiving activity.

5.2 Packing. Packing shall be level A, B, or C, as specified (see 6.1).

5.2.1 Level A. The packaged headset assemblies shall be packed in fiberboard containers conforming to PPP-B-636, class weather resistant, style optional, special requirements. In lieu of the closure and waterproofing requirement in the appendix of PPP-B-636, closure and waterproofing shall be accomplished by sealing all seams, corners and manufacturer's joint with tape, 2 inches minimum width, conforming to PPP-T-60, class 1 or PPP-T-76. Banding (reinforcement requirements) shall be applied in accordance with the appendix to PPP-B-636 using non-metallic or tape banding only.

5.2.2 Level B. The packaged headset assemblies shall be packed in fiberboard containers conforming to PPP-B-636, class domestic, style optional, special requirements. Closures shall be in accordance with the appendix thereto.

5.2.3 Level C. The packaged headset assemblies shall be packed in shipping containers in a manner that will afford adequate protection against damage during direct shipment from the supply source to the first receiving activity. These packs shall conform to the applicable carrier rules and regulations.

5.2.4 Unitized loads. Unitized loads, commensurate with the level of packing specified in the contract or order, shall be used whenever total quantities for shipment to one destination equal 40 cubic feet or more. Quantities less than 40 cubic feet need not be unitized. Unitized loads shall be uniform in size and quantities to the greatest extent practicable.

Downloaded from http://www.everyspec.com

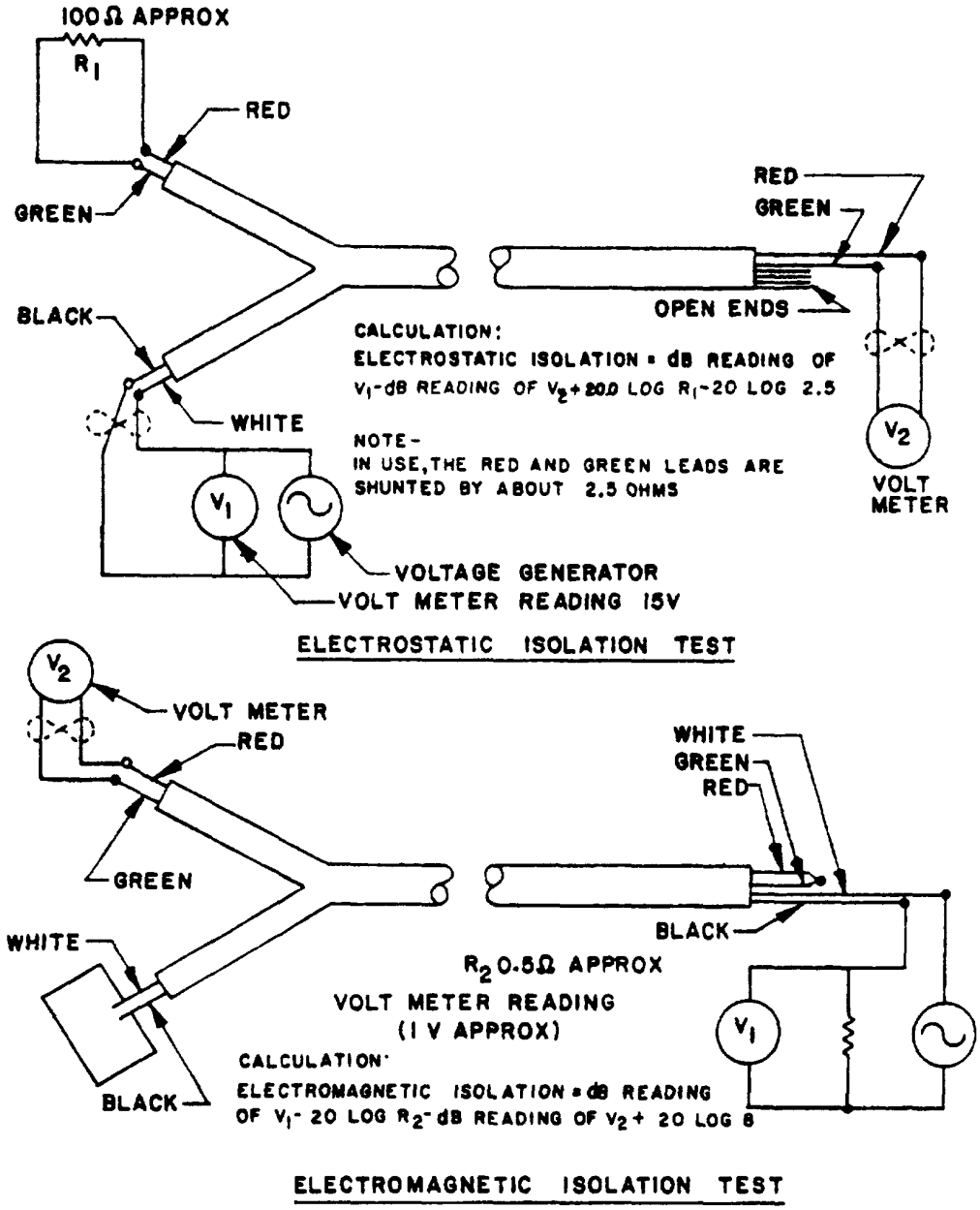

FIGURE 19. Electrostatic and electromagnetic isolation test

Downloaded from http://www.everyspec.com

5.2.4.1 Level A. Headset assemblies, packed as specified in 5.2.1, shall be unitized on pallets in conformance with MIL-STD-147, load type I, with a fiberboard cap (storage aid 4) positioned over the load.

5.2.4.2 Level B. Headset assemblies, packed as specified in 5.2.2, shall be unitized as specified in 5.2.4.1 except that the fiberboard caps shall be class domestic.

5.2.4.3 Level C. Headset assemblies, packed as specified in 5.2.3, shall be unitized with pallets and caps of the type, size and kind commonly used for the purpose and shall conform to the applicable carrier rules and regulations.

5.3 Marking. In addition to any special marking required by the contract or purchase order (see 6.1), each unit package, exterior container and unitized load shall be marked in accordance with MIL-STD-129.

5.4 General.

5.4.1 Exterior containers. Exterior containers (see 5.2.1, 5.2.2, and 5.2.3) shall be of a minimum tare and cube consistent with the protection required and shall contain equal quantities of identical stock numbered items to the greatest extent practicable.

5.4.2 Army procurements.

5.4.2.1 Level A unit packaging. MIL-P-116 submethod IC-2 shall be used in lieu of submethod IA-15 (see 5.1.1.4 and 6.1).

5.4.2.2 Level A and B packing. For level A packing, when quantities per destination are less than a unitized load, the fiberboard containers shall not be banded but shall be placed in a close fitting box conforming to PPP-B-601, overseas type; PPP-B-621, class 2, style 4 or PPP-B-585, class 3, style 2 or 3. Closure and strapping shall be in accordance with applicable container specification except that metal strapping shall conform to QQ-S-781, type I, finish B. When the gross weight exceeds 200 pounds or the container length and width is 48 x 24 inches or more and the weight exceeds 100 pounds, 3 x 4 inch skids (laid flat) shall be applied in accordance with the requirements of the container specification. If not described in the container specification, the skids shall be applied in a manner which will adequately support the item and facilitate the use of material handling equipment. For level B packing, fiberboard boxes shall be weather resistant as specified in level A and the containers shall be banded (see 5.2.1 and 5.2.2).

5.4.2.3 Level A and B unitization. For level A and B unitization, the fiberboard caps shall be weather resistant and softwood pallets conforming to NN-P-71, type IV, size 2 shall be used (see 5.2.4.1 and 5.2.4.2).

5.4.3 Air Force requirements. For Air Force requirements submethod IC-2 shall be used in lieu of submethod IA-15 (see 5.1.1.4 and 6.1).

6. NOTES

6.1 Ordering data. Procurement documents should specify the following

a. Title, number, and date of this specification.
b. Levels of preservation-packing and packing required (see 5.1 and 6.2).
c. Method of preservation, if other than submethod IA-15 (see 5.1.1.4, 5.4.2.1, and 5.4.3).
d. Special marking, if required (see 5.3).

6.2 Qualification. With respect to products requiring qualification, awards will be made only for products which are at the time set for opening of bids, qualified for inclusion in applicable Qualified Products List whether or not such products have actually been so listed by that date. The attention of the contractors is called to these requirements, and manufacturers are urged to arrange to have the products that they propose to offer to the Federal Government tested for qualification in order that they may be eligible to be awarded contracts or orders for the products covered by this specification. The activity responsible for the Qualified Products List

Downloaded from http://www.everyspec.com

is the Air Force Logistics Command, AFLC/LOIE, Wright-Patterson AFB, OH 45433, however, information pertaining to qualification of products may be obtained from the Defense Electronics Supply Center (DESC-E), Dayton, Ohio 45444. Application for qualification tests shall be made in accordance with provisions governing qualification SD-6 (see 6.2.1).

6.2.1 Copies of "Provisions Governing Qualification SD-6" may be obtained upon application to Commanding Officer, Naval Publications and Forms Center, 5801 Tabor Avenue, Philadelphia, PA 19120.

6.3 Anechoic room or chamber (free field room or environment). An Anechoic or free field environment is a room or area whose boundaries absorb effectively all the sound incident thereon, thereby affording essentially free field conditions.

Custodians.
Army - EL
Navy - EC
Air Force - 85

Review activities
Army -
Navy -
Air Force - 99
DLA - ES

User activities
Army -
Navy - MC
Air Force -

Preparing activity
Air Force - 85

(Project 5965-0160)

Downloaded from http://www.everyspec.com

INSTRUCTIONS: In a continuing effort to make our standardization documents better, the DoD provides this form for use in submitting comments and suggestions for improvements All users of military standardization documents are invited to provide suggestions. This form may be detached, folded along the lines indicated, taped along the loose edge *(DO NOT STAPLE)*, and mailed. In block 5, be as specific as possible about particular problem areas such as wording which required interpretation, was too rigid, restrictive, loose, ambiguous, or was incompatible, and give proposed wording changes which would alleviate the problems. Enter in block 6 any remarks not related to a specific paragraph of the document. If block 7 is filled out, an acknowledgement will be mailed to you within 30 days to let you know that your comments were received and are being considered.

NOTE. This form may not be used to request copies of documents, nor to request waivers, deviations, or clarification of specification requirements on current contracts Comments submitted on this form do not constitute or imply authorization to waive any portion of the referenced document*(s)* or to amend contractual requirements

(Fold along this line)

(Fold along this line)

DEPARTMENT OF THE AIR FORCE

NO POSTAGE NECESSARY IF MAILED IN THE UNITED STATES

OFFICIAL BUSINESS
PENALTY FOR PRIVATE USE $300

BUSINESS REPLY MAIL
FIRST CLASS PERMIT NO 73236 WASHINGTON D C

POSTAGE WILL BE PAID BY THE DEPARTMENT OF THE AIR FORCE

AFLC/LOLME
Wright-Patterson AFB, OH 45433

Downloaded from http://www.everyspec.com

(TO DETACH THIS FORM, CUT ALONG THIS LINE)

STANDARDIZATION DOCUMENT IMPROVEMENT PROPOSAL

(See Instructions – Reverse Side)

1. DOCUMENT NUMBER

2. DOCUMENT TITLE

3a. NAME OF SUBMITTING ORGANIZATION

4. TYPE OF ORGANIZATION *(Mark one)*

- ☐ VENDOR
- ☐ USER
- ☐ MANUFACTURER
- ☐ OTHER *(Specify)* ____

b. ADDRESS *(Street, City, State, ZIP Code)*

5. PROBLEM AREAS

a. Paragraph Number and Wording:

b. Recommended Wording

c. Reason/Rationale for Recommendation

6. REMARKS

7a. NAME OF SUBMITTER *(Last, First, MI)* – Optional

b. WORK TELEPHONE NUMBER *(Includ Code)* – Optional

c. MAILING ADDRESS *(Street, City, State, ZIP Code)* – Optional

8. DATE OF SUBMISSION *(YYMMDD)*

DD FORM 82 MAR 1426

PREVIOUS EDITION IS OBSOLETE.