Downloaded from http://www.everyspec.com

MIL-H-55258B(EL)

13 June 1968

Superseding
MIL-H-55258A(EL)
11 December 1967

MILITARY SPECIFICATION

HANDSET H-189/GR

1. SCOPE.

1.1 This document covers one type of lightweight handset designated as H-189( )/GR.

2. APPLICABLE DOCUMENTS.

2.1 The following documents, of the issue in effect on the date of invitation for bids, or of request for proposal, form a part of this specification to the extent herein specified.

SPECIFICATIONS

FEDERAL

L-P-393	Plastic Molding, Polycarbonate Resins, Injection and Extruded.
PPP-F-320	Fiberboard; Corrugated and Solid, Sheet Stock (Container Grade), and Cut Shapes.
PPP-P-76	Tape, Pressure Sensitive, Adhesive, Paper (for Carton Sealing).
PPP-P-291	Paperboard, Wrapping, Cushioning
PPP-P-636	Box, Fiberboard.
PPP-T-45	Tape, Gummed Paper, Reinforced and Plain, for Sealing and Securing.
PPP-T-97	Tape, Pressure-Sensitive, Adhesive, Filament-Rein orced,

MILITARY

MIL-P-116	Preservation, Methods of.
MIL-T-152	Treatment, Moisture and Fungus-Resistant, of Communications, Electronic, and Associated Electrical Equipment.
MIL-V-173	Varnish, Moisture and Fungus-Resistant (for the Treatment of Communications, Electronic, and Associated Electrical Equipment).
MIL-M-13231	Marking of Electronic Items.

Downloaded from http://www.everyspec.com

STANDARDS

MILITARY

MIL-STD-105	Sampling Procedures and Tables for Inspection of Attributes.
MIL-STD-129	Marking for Shipment and Storage.
MIL-STD-147	Palletized Unit Loads.
MIL-STD-810	Environmental Test Methods.

DRAWINGS

Electronics Command

SC-DL-544225	Handset H-189( )/GR.

Ships Systems Command

SK-N-864	Simulated Gun Blast Producing Equipment.

(Copies of specifications, standards, drawings, and publications, required by suppliers in connection with specific procurement functions, should be obtained from the procuring activity, or as directed by the contracting officer).

2.2 Other publications. The following documents form a part of this specification to the extent herein specified. Unless otherwise indicated, the issue in effect on the date of invitation for bids shall apply.

United States of America Standards Association

Z-24.4-1949	Pressure Calibration of Laboratory Standard Pressure Microphone.
Z-24.9-1949	Coupler Calibration of Earphones.

(Application for copies should be addressed to the United States of America Standards Association, Incorporated, 10 East 40th Street, New York, N. Y.)

3. REQUIREMENTS.

3.1 Description. Handset H-189/GR is a lightweight handset consisting of a dynamic, moving-coil microphone, and an earphone. It incorporates a switch and a retractile cord terminated with Connector U-229/U.

3.2 Specifications and drawings. Handset H-189/GR shall meet the requirements herein set forth, and shall conform to the design and construction requirements detailed in the drawings listed on SC-DL-544225 for Handset H-189( )/GR, which constitutes an integral part of the overall specification requirements. Any apparent conflict should be referred to the contracting officer for resolution.

Downloaded from http://www.everyspec.com

3.2.1 Material. The plastic molding material shall conform to specification L-P-393. The molding process used in the production of the approved preproduction samples shall be completely described, said description being submitted together with the test report of the said samples to the government. The molding process used and described in said report shall not be changed, or modified, in any manner whatsoever during any given production run without specific and written approval of the government.

3.3 Preproduction samples. The contractor shall supply twenty preproduction samples for approval, unless otherwise specified. Six samples will be subjected to both Group A and Group B inspection; fourteen samples will be subjected to Group C inspection.

3.3.1 Resubmission. Samples subjected to inspection and failing to meet specification requirements may be remade, at the option of the contractor, and resubmitted for inspection. If such sample then conforms to specification requirements, it may be accepted as a unit of production on the contract.

3.3.2 Testing time. The period of testing is estimated as between 45 and 60 days.

3.4 Microphone performance.

3.4.1 Response. The frequency response shall be within the envelope of Figure 1. The minimum power output shall be minus 56 dbm @ 1,000 Hz. (This corresponds to a voltage reading of not less than 0.000620 across the 150 ohm load resistor).

3.4.2 Impedance. The impedance at 20 degrees Centigrade and 1,000 Hz shall be 150 ohms ±10 percent.

3.4.3 Dielectric strength. The microphone shall withstand the application of 100 volts, DC, when tested as herein stipulated.

3.4.4 Insulation resistance. The microphone shall have an insulation resistance of at least one megohm.

3.4.5 Distortion. The harmonic distortion in the output of the microphone, at any frequency between 300 and 3,500 Hz, shall not exceed five percent, with an input sound pressure of 115 decibels relative to 0.000200 dyne per square centimeter.

3.5 Earphone performance.

3.5.1 Response. The earphone response in the handset shall be at least 102 decibels above a reference level of 0.000200 dyne per square centimeter, when one milliwatt at 1,000 Hz is applied to the earphone terminals. The frequency response shall be within the envelope of Figure 2.

Downloaded from http://www.everyspec.com

3.5.2 Impedance. The impedance at 20 degrees Centigrade and 1,000 Hz shall be 1,000 ohms ±10 percent.

3.5.3 Dielectric strength. The insulation between the earphone terminals and the exposed metal parts shall withstand the application of 100 volts DC for 10 seconds, when tested as herein stipulated.

3.5.4 Insulation resistance. The earphone shall have an insulation resistance of at least one megohm.

3.5.5 Distortion. The harmonic distortion in the output of the earphone at any frequency between 300 and 3,500 Hz shall not exceed five percent when the earphone is supplied with one milliwatt of electrical input power.

3.5.6 Overload. The earphone shall be subjected to the overload test stipulated in 4.10.6 after which the change in response shall not exceed three decibels.

3.6 Switch action. The pressure required to close the thumb switch shall be within the limits of two to four pounds. The pressure required to maintain complete depression shall be one-half the pressure required to close the switch, plus or minus twenty percent.

3.7 Interchange. Units, selected as herein stipulated, shall meet the test specified in 4.12.

3.8 Operation of complete unit. The handset shall meet the operating requirement specified in 4.7.

3.9 Marking. All major component items shall be marked in accordance with MIL-M-13231.

3.10 Service requirements. The handset shall meet the requirements herein stipulated after subjection to the following environmental tests. Selection of test samples shall be made as herein set forth. The net change in frequency response of either the microphone, or the earphone, shall not exceed three decibels, as determined by measurements made both before and after each test. The applicable tests are listed in Table III - Group C Inspection.

(a) Salt Fog
(b) Blast
(c) Sand and Dust
(d) High Temperature
(e) Immersion
(f) Humidity

Downloaded from http://www.everyspec.com

(g) Drop
(h) Vibration
(i) Bounce
(j) Elevation
(k) Fungus Resistance
(l) Switch Life

3.10.1 Fungus resistance. The handset shall be inert to the attack of fungus. This may be attained by the use of materials which are immune to fungus, or, by subjecting materials, which are not immune to such attack, to appropriate treatment, in accordance with MIL-T-152, and varnish, in accordance with MIL-V-173. In either instance the handset shall be subjected to the test stipulated in 4.13.11and meet the criteria therein stipulated.

3.11 Reflectance. The reflectance (reflection factor, or reflection coefficient) of any external surface, as measured at an angle of 60 ± 6 degrees (the right angle to the surface being considered as zero degrees) shall not exceed ten percent, as determined by the procedure herein stipulated. (Reflectance is defined, for the purpose of this specification, as the total luminous flux incident upon a plane surface that is reflected, and that varies as the wavelength distribution of the incident light).

3.12 Workmanship. Workmanship shall be such as to meet all the requirements of this specification.

4. QUALITY ASSURANCE PROVISIONS.

4.1 Responsibility for inspection. Unless otherwise specified, the supplier is responsible for all inspection requirements as herein specified. The supplier may utilize his own facilities, or any commercial facility, acceptable to the Government. The Government reserves the right to perform any of the inspections stipulated in the specifications, where such inspections are deemed necessary to assure conformance with specified requirements.

4.2 Classification of inspection. Inspection is classified as follows:

a. Preproduction (excluding preparation for delivery).

b. Inspection covered by subsidiary documents.

c. Quality conformance of production.

(1) Equipment inspection, excluding preparation for delivery.

(2) Inspection of preparation for delivery.

Downloaded from http://www.everyspec.com

4.3 Preproduction inspection. This inspection will be performed by the Government, unless otherwise specified. It consists of all the inspection and test designated as Groups A, B, and C herein.

4.4 Inspection covered by subsidiary documents. The following shall be inspected under the applicable subsidiary documents:

Item	Reference
Material	3.2.1
Marking	3.9
Fungus Resistance	3.10.1

4.5 Inspection of production units for quality conformance. The contractor shall perform the inspection designated as Group A, B, and C herein. This does not relieve the contractor of his responsibility to perform any additional inspection, which may be necessary to control quality and assure conformance to specification requirements. The Government will examine and evaluate the contractor's inspection procedures and records. In addition, the Government, at its discretion, may perform all or any part of the inspection specified, in order to verify conformance to specification requirements. Test equipment for such verification shall be made available to the contractor.

4.5.1 Group A inspection. This inspection conctitutes a sampling procedure as stipulated in MIL-STD-105. The inspection and tests covered in this group are listed in Table 1. (When accomplished as a part of the "preproduction inspection" these measurements will be performed on six sample units).

Table 1 Group A inspection

Inspection or Test	Req Para.	Insp Para.	AQL Major	AQL Minor
Microphone				
Response	3.4.1	4.9.1		
Impedance	3.4.2	4.9.2	1.0 *	
Dielectric strength	3.4.3	4.9.3		
Insulation resistance	3.4.4	4.9.4		
Earphone				
Response	3.5.1	4.10.1		
Impedance	3.5.2	4.10.2	1.0 *	**
Dielectric strength	3.5.3	4.10.3		
Insulation resistance	3.5.4	4.10.4		
Operation of complete unit	3.8	4.7		
Visual & mechanical	3.12	4.8		

* Constitutes the group percentage.
** All electrical and operating defects are classified as "major"defects.

Downloaded from http://www.everyspec.com

4.5.2 Group B inspection. This inspection also constitutes a sampling procedure as stipulated in MIL-STD-105. The inspection and test covered in this group are listed in Table II. Group B inspection shall be performed on inspection lots which have passed group A inspection. (When effected as a part of the preproduction inspection these measurements and inspections will be performed on the same six sample units previously subjected to group A inspection).

Table II Group B inspection

Inspection or Test	Req Para.	Insp Para.	AQL %
Distortion			
Microphone	3.4.5	4.9.5	6.5
Earphone	3.5.5	4.10.5	6.5
Earphone Overload	3.5.6	4.10.6	6.5
Switch Action	3.6	4.11	6.5
Interchange	3.7	4.12	6.5
Reflectance	3.11	4.15	6.5

Note: The normal inspection level will be S-4.

4.5.3 Group C inspection. This inspection comprises the tests listed in Table III, and shall be performed on sample units which have passed both Group A, and Group B inspections. Sampling comprises two phases, as follows:

4.5.3.1 Initial sampling. Fourteen samples of the handset, and two samples of the switch assembly shall be selected at random from the first 1,000 units produced on the order, or contract. These samples comprise the first quality-conformance inspection lot. The fourteen samples of the handset shall be subdivided into pairs, and designated as C-1 thru C-6. These pairs shall be subjected to group C inspection, as shown in Table III, two pairs being subjected to the Moisture Resistance and the Drop Tests. The two samples of the switch assembly, designated as C-7, shall be subjected to the switch life test listed in Table III.

4.5.3.2 Production sampling. Subsequent to the initial sampling, eight samples of the handset, and two samples of the switch assembly, shall be selected, at random, from each 1,000 units produced on the order or contract. These samples comprise production quality-conformance, group C, inspection lots. The eight samples of the handset shall be subdivided into pairs (as before) and designated as C-3 thru C-5. These pairs shall be subjected to group C inspection (as before) as shown in Table III. The two samples of the switch assembly, designated as C-7 (as before) shall be subjected to the switch life test listed in Table III.

Downloaded from http://www.everyspec.com

4.5.3.3 Orders for less than 1,000 units. Orders for less than 1,000 units shall be subject to sampling and Group C testing in the same manner as is required on orders for more than 1,000 units. The number of units constituting the basis of such inspection, however, is reduced from 1,000 to 100 and a sampling and Group C inspection is also required on the last 100 units produced on the order.

Table III Group C inspection

Inspection or Test	Req Para.	Insp Para
C - 1		
Salt Fog	3.10	4.13.1
C - 2		
Blast		4.13.2
Sand & Dust		4.13.3
C - 3		
High Temperature		4.13.4
Immersion		4.13.5
C - 4		
Moisture Resistance		4.13.6
Drop		4.13.7
C - 5		
Vibration		4.13.8
Bounce		4.13.9
Elevation		4.13.10
C - 6		
Fungus Resistance		4.13.11
C - 7		
Switch Life	3.10	4.14

Downloaded from http://www.everyspec.com

4.5.3.4 Group C inspection failure. In the event that a production sample unit fails to pass any of the Group C inspection, or tests, the production lot from which the defective sample was taken shall be set aside. The circumstances attending such failure shall be investigated as soon as possible by the contractor, and the established facts reported to the Government inspector. Pending the determination by the Government inspector, or the contracting office, as to the significance of such failure, and the remedial action to be taken, acceptance of all units which are suspected of deficiencies, shall be forthwith suspended. Also, any production which is effected subsequent to the date of the Group C inspection failure, will be the contractor's risk; any production lot, or fraction thereof, submitted to the Government for acceptance will be subjected to whatever inspection procedure may be deemed appropriate by the Government.

4.6 Inspection of preparation for delivery. Preparation for delivery shall conform to the applicable provisions of Specification MIL-P-116, and to the stipulations herein.

4.7 Operation of complete unit. The handset shall be tested to verify that when the switch is closed, speech into the microphones shall be audible in the earphone. This test may be made with the aid of any audio-frequency amplifier having the requisite gain to facilitate this verification.

4.8 Visual examination. The handset shall be visually inspected, with particular attention being given to the following factors:

a. Construction and finish of all elements entering into the handset assembly.

b. Cleanliness of all air spaces such as air gaps and portholes.

c. Effectiveness of all soldering and sealing operations.

d. The fit and sealing of the microphone and the earphone cases, the moisture barriers, and the moisture guards.

e. Marking of component items.

NOTE: The use of a shadowgraph in determining the cleanliness of the air gap is recommended.

4.9 Microphone tests.

4.9.1 Response. The response of the microphone in the completely assembled handset shall be determined by means of an AC electronic voltmeter, with an input impedance of at least one-half megohm. The measurements shall be made with a constant sound pressure of twenty-eight dynes per square centimeter

Downloaded from http://www.everyspec.com

at the microphone location. The driver unit shall be the Western Electric Type No. 555-W, or functional equivalent, which shall have been previously calibrated by means of a condenser microphone such as Western Electric 640AA, or functional equivalent, calibrated by the "reciprocity method" as specified in A.S.A. Standard Z-24.4-1949 (Primary Calibration). The microphone shall be placed parallel to and a quarter-inch from the front and center of the driver unit. The measurement shall be made across a non-inductive load resistance of 150 ohms. Readings shall be taken over the frequency range of 300 to 3,500 Hz at the following increments: 100 Hz from 300 to 1,000, and 250 Hz from 1,000 to 3,000. The microphone shall meet the requirements of 3.4.1.

4.9.2 Impedance. The microphone in the assembled handset shall be placed in front of the driver unit as specified in 4.9.1 with a calibrated variable resistor in the open circuit position, replacing the 150 ohm resistor, and the electronic voltmeter connected across the terminals of the microphone. With an ambient temperature of 20 degrees Centigrade increase the sound pressure of the driver unit at 1,000 Hz until the output of the microphone is 0.0001 volt. Vary the resistance until the output is reduced to 0.0005 volt. The resistance thus determined shall be taken as the electrical impedance of the microphone and shall comply with 3.4.2.

4.9.3 Dielectric strength. The microphone shall be subjected to 100 volts, DC, for ten seconds. This shall be applied between the terminals and the exposed metal part of the unit. Conformance to 3.4.3 is required.

4.9.4 Insulation resistance. The insulation resistance shall be determined by use of an ohmmeter having a working voltage of less than 100, and having an overall accuracy of at least ten percent. Conformance to 3.4.4 is required.

4.9.5 Distortion. The harmonic distortion shall be measured in a manner similar to that employed for measuring frequency response, except that a Hewlett-Packard Distortion Analyzer (Model B or later), or its functional equivalent, shall be connected in parallel with the 150 ohm resistor to measure the output, in place of the voltmeter. All other equipment and test set-up remains the same. The sound pressure developed shall be 115 decibels relative to 0.0002 dyne per square centimeter. Readings shall be taken over the frequency range of 300 to 3,500 Hz at the following increments: 100 Hz from 300 to 1,000 and 250 Hz from 1,000 to 3,500. Compliance with 3.4.5 is required.

4.10 Earphone tests.

Downloaded from http://www.everyspec.com

4.10.1 Response. The response of the earphone in the completely assembled handset shall be determined in accordance with the stipulations in A.S.A. Standard Z-24.9-1949 (Constant Available Power R= 1,000 ohms) using the equipment specified herein. Readings shall be taken over the frequency range of 300 to 3,500 Hz at the following increments: 100 Hz from 300 to 1,000, and 250 Hz from 1,000 to 3,500. The test equipment shall be disposed and connected as shown in Figure 3 with the handset mounted on the coupler as indicated. The design of the coupler shall provide proper seating and sealing of the earphone cap.

4.10.1.1 Test equipment. The test equipment is identified and qualified as follows:

a. Condenser microphone. This unit shall be the Western Electric Company Condenser Microphone No. 640AA, or its functional equivalent. This shall be used for the measurement of sound pressure after being calibrated by the reciprocity method defined in A.S.A. Standard Z-24.4-1949.

b. Audio oscillator. The audio oscillator shall have a frequency range of at least 300 to 3,500 Hz, a high degree of stability in both output voltage and frequency, and a waveform distortion of less than two percent.

c. Vacuum-tube voltmeters. The voltmeters shall have an essentially flat frequency response (± one decibel) from at least 300 to 3,500 Hz, and be capable of determining any voltage developed in this test to an accuracy of two significant figures. (Note: Voltages developed will range from 0.0005 to 5.0).

d. Microphone-preamplifier. This unit shall have an essentially flat response (± one decibel) from 300 to 3,500 Hz, a high degree of stability with reference to variation in ambient temperature, and not over two percent harmonic distortion.

4.10.1.2 Test procedure. With the test set-up as shown in Figure 3, the output of the oscillator at each test frequency shall be adjusted to exactly 2.0 volts rms as measured by the voltmeter No. 1. The output of the preamplifier shall be noted as indicated on voltmeter No. 2. This indication shall be converted to the equivalent decibel value above 0.0002 dyne per square centimeter, using the most recent available calibration curve for the test microphone in use. The response shall comply with 3.5.1.

Downloaded from http://www.everyspec.com

4.10.2 Impedance. The impedance shall be determined by (1) application of exactly one volt across the terminals and by measurement of the resulting current, or (2) by means of an impedance bridge. Measurement shall be made at 1,000 Hz. The test equipment shall have an accuracy of at least ±10 percent. Compliance with 3.5.2 is required.

4.10.3 Dielectric strength. The insulation between the earphone terminals and the exposed metal parts shall be subjected to 100 volts DC, for ten seconds. Compliance with 3.5.3 is required.

4.10.4 Insulation resistance. The insulation resistance shall be determined by use of a megger which is capable of measuring one megohm with no more than five percent error. This measurement shall be made after the test for dielectric strength and across the same points. Compliance with 3.5.4 is required.

4.10.5 Distortion. The harmonic distortion shall be measured in a manner similar to that employed for the determination of the frequency response except that the Hewlett-Packard Model 330 Distortion Analyzer (Model B, or later) or its functional equivalent, shall replace the No. 2 - VTVM. All measurements shall be made with an audio oscillator output of 2.0 volts rms, over the same frequency range and at the same intervals as required for the determination of frequency response. Compliance with 3.5.5 is required.

4.10.6 Overload. The earphone shall be subjected to an input of 200 milliwatts (equivalent to 14.2 volts) at 1,000 Hz, for eight hours, after which the response shall be determined in accordance with 4.10.1. Compliance with 3.5.6 is required.

4.11 Switch action. The pressure required to close the switch shall be determined by means of a Hunter Mechanical Force Gage, or functional equivalent. Compliance with 3.6 is required.

4.12 Interchange. Replaceable parts, as listed below, selected as herein specified, shall be substituted in place of the corresponding part in the approved preproduction sample. Each such substitution shall result in a satisfactory fit and shall provide essentially equivalent function. At the completion of this inspection and test the interchanged parts shall be reassembled in the units from which they were taken.

a. Microphone
b. Earphone
c. Switch
d. Cord
e. Body

Downloaded from http://www.everyspec.com

4.13 Environmental tests. Units, selected as stipulated herein, shall be subjected to the following tests designated as Group C. Measurements of response throughout the designated frequency range shall be made both before and after each test. The net difference in response, in any instance, shall not exceed three decibels, neither shall any external surface or internal surface or component part exhibit any significant deterioration. (Significant deterioration is defined for the purposes of this specification as any visible degradation which can be attributed to flaky, pitted, blistered, or otherwise loosened finish or metal surface).

4.13.1 Salt Fog. The unit shall be subjected to the Salt Fog Test, Method 509 of MIL-STD-810.

4.13.2 Blast. The handset shall be mounted on the carriage of the US Navy Simulated Gun-Blast Equipment, in accordance with Ships Systems Command Drawing SK-N-864. The unit shall be secured in two successive positions (1) with the face of the microphone at right angles to the plane of the shock wave, and (2) with the face of the earphone at such right angle. (The element not in right-angle position for either test shall be removed from the handset for the duration of the test). Each element shall be subjected to 30 blasts, each developing a pressure of 9.5 pounds, peak, per square inch. Measurements of response shall be made both before and after the test. The change in response of either microphone or earphone shall not exceed three decibels.

4.13.3 Sand and Dust. The unit shall be subjected to the Dust Test, Method 510, in MIL-STD-810. Reasonable time intervals are permitted between the several steps specified for this test; however, each step shall be performed without any significant interruption. Measurement both before and after the unit is subjected to this test shall be effected.

4.13.4 High temperature. The unit shall be subjected to the High Temperature Test, Method 501, Procedure 1 in MIL-STD-810.

4.13.5 Immersion. The unit shall be subjected to the Immersion Test, Method 512, Procedure I in MIL-STD-810.

4.13.6 Humidity. The unit shall be subjected to the first five steps of Procedure III in Method 507 of MIL-STD-810. The unit shall then be subjected to five 48-hour cycles, in immediate succession as depicted in the figure related to this procedure and shown in the standard. After the cycling the unit shall be subjected to the drop test herein specified.

4.13.7 Drop. The unit shall be dropped twelve times in a random manner from a height of six feet on concrete.

Downloaded from http://www.everyspec.com

4.13.7.1 Procedure and Criteria. The unit shall be tested for response of both microphone, and earphone, before the humidity test and after the first five humidity cycles, and first twelve drops. Failure to meet the established criteria either with respect to the response afforded or with respect to the physical condition of the unit constitutes a basis of rejection. After the first five humidity cycles, the unit shall be subjected to a second and a third series of five humidity cycles, each followed by the drop test. After the final drop test (completing 36 drops altogether) the unit shall be thoroughly examined physically. The body of the handset shall be substantially intact; only minor chipping and abrasion are tolerable; major fractures or other significant failure constitutes a basis of rejection.

4.13.8 Vibration. The unit shall be subjected to vibration in accordance with Method 514 of MIL-STD-810, Procedure IX. It shall be firmly secured in a horizontal position and vibrated for the periods specified in the standard.

4.13.9 Bounce. The handset shall be subjected to the following bounce test:

a. Equipment. The equipment used to perform the bounce test shall be the "Package Tester," Type 1, 000-SC as made by the L.A.B. Corporation, situated at Skaneateles, New York, or functional equivalent.

b. Surface preparation. Cover the planking with one-half inch plywood so that the grain of the wood is parallel to the chain drive. Fasten the plywood with sixpenny nails spaced about six inches apart, in a six inch square, in the center. Use a nailset to drive the nails well below the surface.

c. Compartment. Construct one open compartment, using one-half inch plywood for the handset. The horizontal dimensions should provide for lateral motion of from one to three inches of the handset.

d. Operation. Operate the machine, shafts in phase, for three hours, at 284 ± 2 rpm.

4.13.10 Elevation. The unit shall be subjected to the Altitude Test, Method 500, Procedure I in MIL-STD-810.

4.13.11 Fungus Resistance. The unit shall be subjected to a 28-day Fungus Resistance Test in accordance with Method 508 of MIL-STD-810.

Downloaded from http://www.everyspec.com

4.14 Switch life. The switch shall be operated for a minimum of 500,000 cycles. Each cycle shall be complete providing "make" and "break" with positive detent action. The rate shall not exceed one cycle per second. The current thru the control circuit shall be one-half ampere provided by a 24 volt direct current supply. The microphone circuit need not be energized. Functionally, the microphone circuit contacts shall close first, the control circuit contacts shall open first. The number of mechanical operations of the switch-actuating lever shall be indicated by a reliable mechanical counter. The number of completed electrical contact closures of the control circuit shall be indicated by an electronic counter actuated by the current in this circuit when the contacts are closed.

4.14.1 Criteria. After the completion of cycling, when the mechanical counter has indicated 500,000 operations, the electronic counter shall also indicate 500,000 contact closures. No discrepancies in actual count will be permitted, excepting as such irregularities are accounted for by known interruptions in operation.

4.15 Reflectance. The determination of reflectance shall be made with a Gardner Portable 60-degree Glossmeter, or functional equivalent, as made by the Gardner Laboratory, Bethesda, Maryland. Ten measurements of the reflectance shall be made using flat specimens of the material, and providing a minimum of one circular inch for each measurement. The average reading shall be determined and shall conform to 3.11.

4.15.1 Specimen production. Flat specimens of the molding material may be made in the same molds used for the manufacture of production items by inserting flat-surfaced fillers, whose surface bears the same characteristic as the interior surface of the mold it is intended to duplicate. The molding process used in making the flat specimens shall be identical in all essential respects to the molding process used in the manufacture of production units.

5. PREPARATION FOR DELIVERY

5.1 Level A. Packaging. (See 6.2)

5.1.1 Cleaning. The handset shall be cleaned in accordance with Process C-1 of MIL-P-116.

5.1.2 Drying. The unit shall be dried in accordance with the applicable provisions of MIL-P-116.

Downloaded from http://www.everyspec.com

5.1.3 Unit packaging. Unit packaging shall be in accordance with the methods specified in MIL-P-116, and as herein specified. Each handset shall be packaged per Method III. The unit shall be wrapped in paperboard, Type III, per PPP-P-291, and secured with tape Type III per PPP-T-45. Thus wrapped, the unit shall be placed within a close-fitting fiberboard box Type W-6C per PPP-B-636. The box shall be closed in accordance with the applicable provisions of the box specification, and all seams and joints shall be sealed with tape not less than two inches wide conforming to PPP-T-76. The size of the unit package shall not exceed 0.08 cubic foot.

5.2 Level C - Packaging. Each unit shall be preserved and packaged in a manner that will afford adequate protection against corrosion, deterioration, and damage during shipment from the source of supply to the first receiving activity (see 6.2).

5.3 Level A - Packing. Units, packaged as specified in 5.1, or 5.2 (Level A or Level C) shall be packed in a close-fitting, fiberboard container conforming to PPP-B-636, Type CF, weather-resistant class, for special requirements use. The box shall be closed in accordance with the applicable provisions of the box specification. To the greatest extent practicable, fiberboard boxes shall be uniform in size, and shall contain an equal number of units, in order to facilitate pallet shipments (see 6.2).

5.3.1 Pallet shipments. Units, packed as specified in 5.3, shall be placed on a pallet in conformance to MIL-STD-147, Type I load. A fiberboard cap shall be placed over this load with its two sides extending down at least twelve inches in order to accommodate marking requirements. The cap shall be made of fiberboard, Type W-5s, weather-resistant class, conforming to PPP-F-320. The load shall be bonded to the pallet by strapping.

5.3.2 Shipments less than pallet size. When unit quantities are less than pallet size, containers specified in 5.3 shall be reinforced by pressure-sensitive filament tape conforming to PPP-T-97, Type IV, as specified in the appendix of the box specification. No further packing is required.

5.4 Level B - Packing. Units packaged as specified in 5.1 or 5.2, shall be packed as specified in 5.3 except that the fiberboard boxes and caps shall be of domestic lass (see 6.2).

5.5 Level C - Packing. Units packaged as specified in 5.1 or 5.2 shall be packed as specified in 5.3 except that the pallets and the fiberboard boxes and caps shall be of the type, size, and kind, commonly used for this purpose. They shall conform to the regulations of the common carrier applicable to the mode of transportation employed. Packing shall conform to the requirements of adequate protection both to the package and to the contents during shipment from the supply source to the first receiving activity (see 6.2).

Downloaded from http://www.everyspec.com

5.6 Marking. Marking shall conform to MIL-STD-129 and to the stipulations (if any) in the contract.

6. NOTES

6.1 Intended use. Handset H-189( )/GR is intended for use with Radio Set AN/PRC-25.

6.2 Procurement data. Procurement data should include the following:

a. Number, title, and date of this specification.

b. Levels of packaging and packing required.

c. Whether the packaging and packing must withstand the rough handling tests of MIL-P-116.

d. Marking and shipping of samples.

e. The place designated for final inspection.

6.3 Nomenclature. After the approval of the preproduction samples, the contractor should apply to the contracting officer for the assignment of the approved nomenclature.

6.4 Corrosion criteria. The corrosion criteria herein defined, as applicable, are supplemental to the criteria defined in MIL-STD-810.

6.5 Test conditions. All test conditions specified must be strictly adhered to, within the specified tolerances. Violations of specified requirements may constitute grounds for the rejection of units subjected to excessive conditions, in any respect, and in any test.

6.6 Equivalency. Whenever the term "equivalent" or "functional equivalent" is used in relation to a particular item of test equipment, it shall be construed to mean "an item which is physically interchangeable, and functionally equivalent to the specified item." All proposed substitutions of test equipment, or modification of test procedure must be approved by the government.

CUSTODIAN
Army - EL

Preparing Activity
Army - EL

Project No. 5965 - A080

Downloaded from http://www.everyspec.com

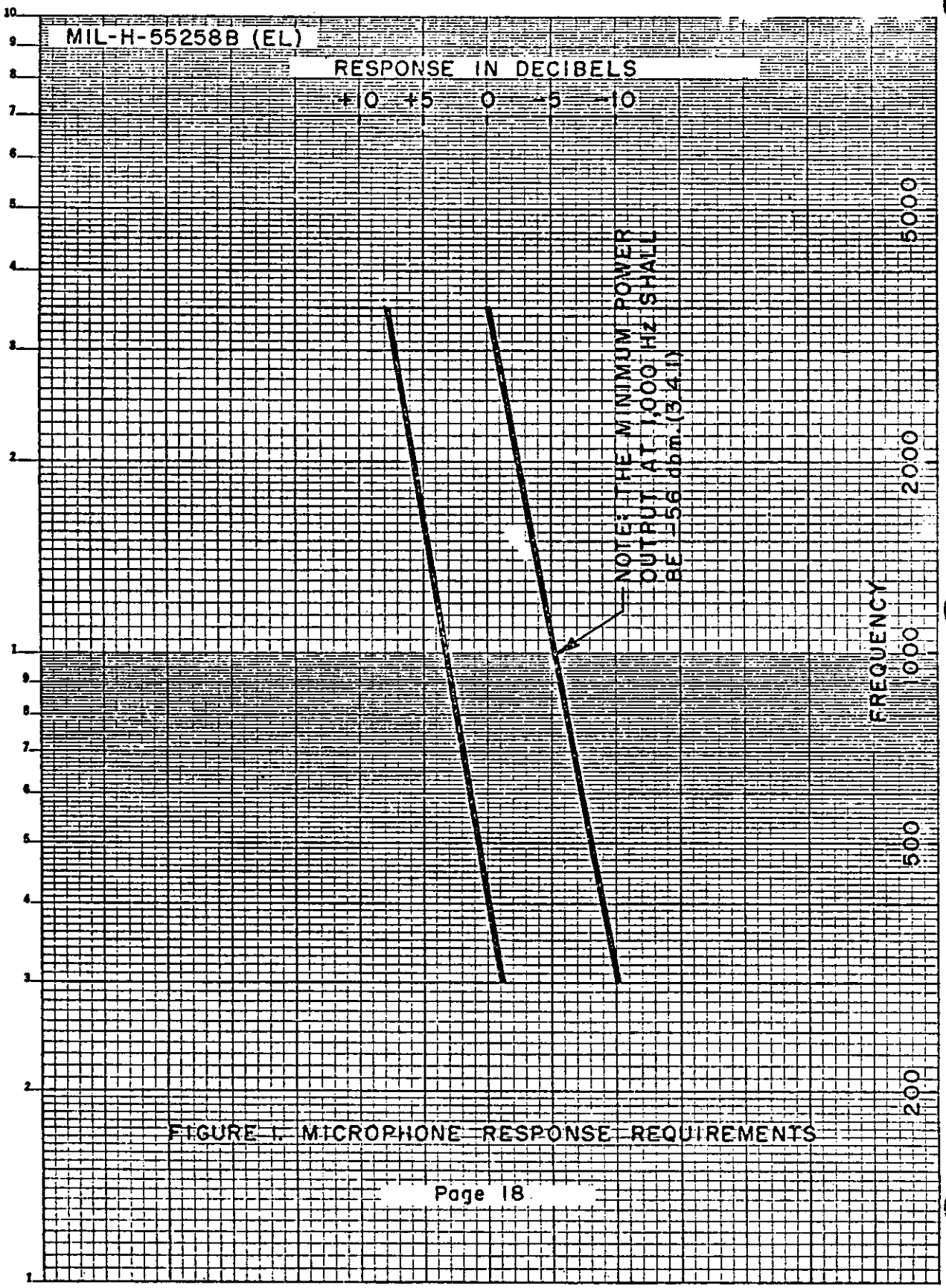

FIGURE 1. MICROPHONE RESPONSE REQUIREMENTS

5 CYCLES X 70 DIVISIONS MADE IN U.S.A. KEUFFEL & ESSER CO.

Downloaded from http://www.everyspec.com

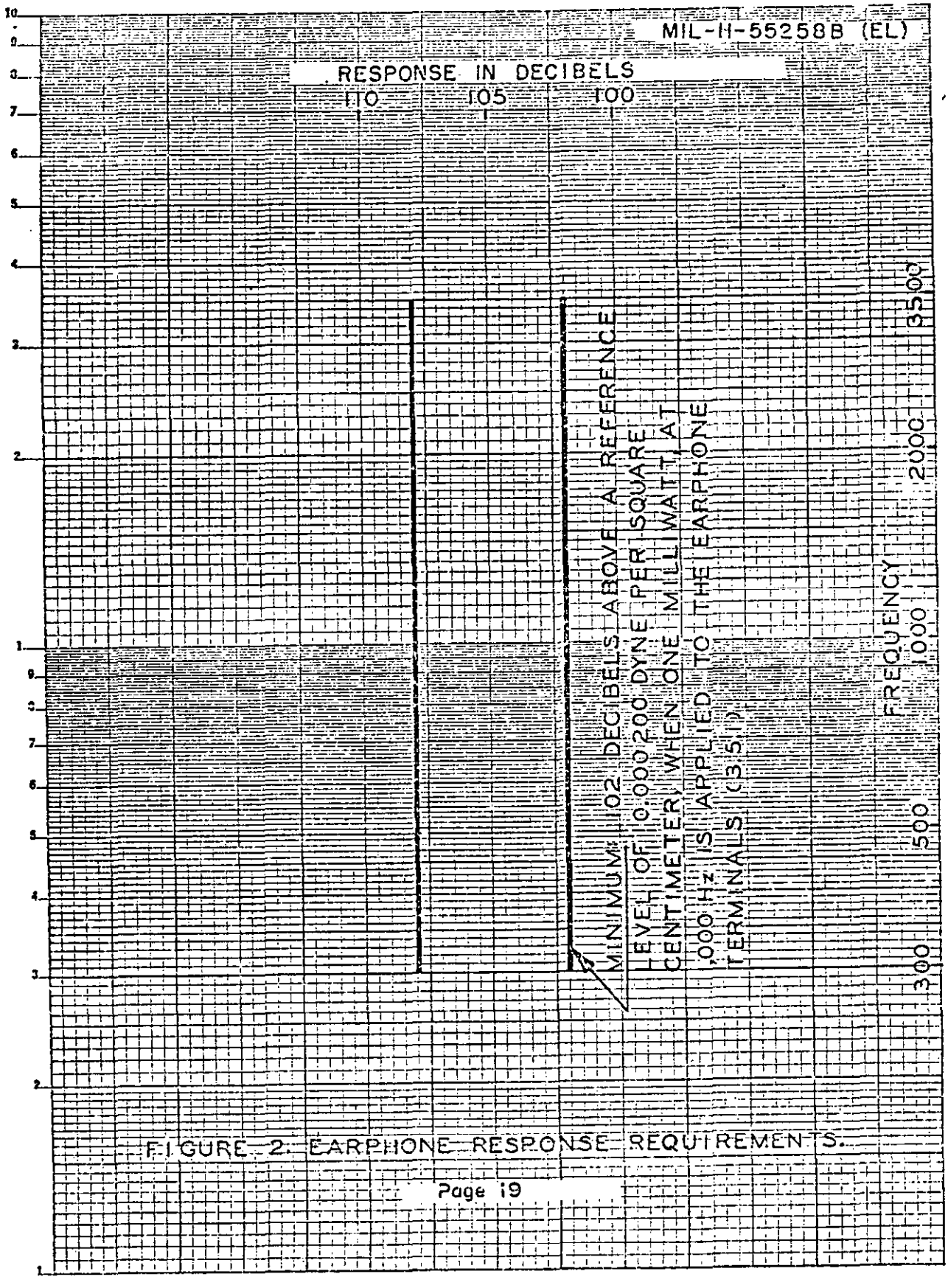

FIGURE 2. EARPHONE RESPONSE REQUIREMENTS.

KEUFFEL & ESSER CO.

Downloaded from http://www.everyspec.com

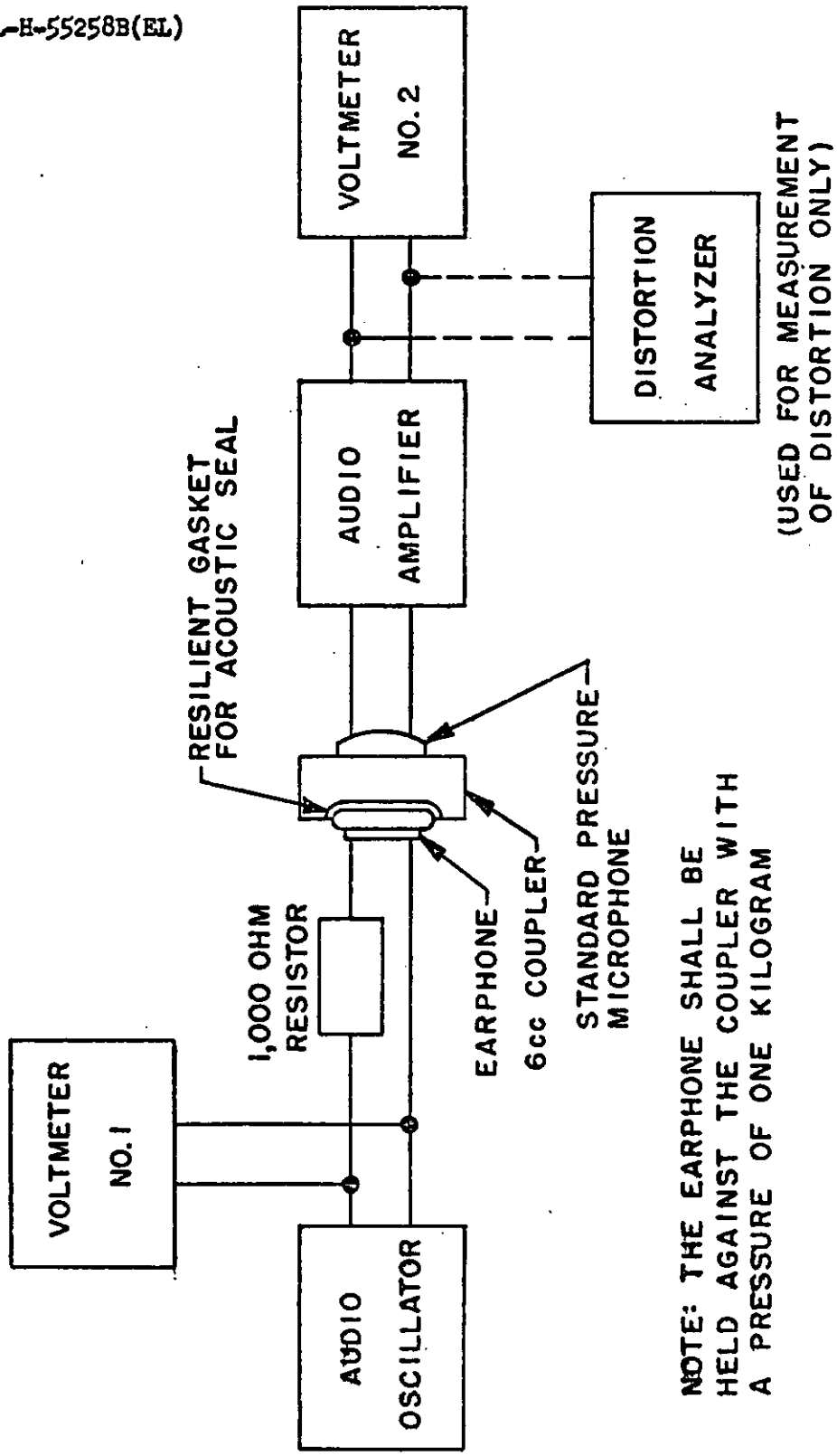

NOTE: THE EARPHONE SHALL BE HELD AGAINST THE COUPLER WITH A PRESSURE OF ONE KILOGRAM

FIGURE 3. EARPHONE TEST EQUIPMENT

Downloaded from http://www.everyspec.com

FOLD

Department of the Army
Headquarters
U.S.Army Electronics Command
Fort Monmouth, New Jersey 07703

POSTAGE AND FEES PAID

OFFICIAL BUSINESS

Commanding General
U.S.Army Electronics Command
ATTN: AMSEL-TD-SS
Fort Monmouth, New Jersey 07703

To detach this form, cut along this line

FOLD

Downloaded from http://www.everyspec.com

To detach this form, cut along this line

SPECIFICATION ANALYSIS SHEET

Form Approved
Budget Bureau No. 22-R255

INSTRUCTIONS: This sheet is to be filled out by personnel, either Government or contractor, involved in the use of the specification in procurement of products for ultimate use by the Department of Defense. This sheet is provided for obtaining information on the use of this specification which will insure that suitable products can be procured with a minimum amount of delay and at the least cost. Comments and the return of this form will be appreciated. Fold on lines on reverse side, staple in corner, and send to preparing activity. Comments and suggestions submitted on this form do not constitute or imply authorization to waive any portion of the referenced document(s) or serve to amend contractual requirements.

SPECIFICATION

MIL-H-55258B(EL) Handset H-189/GR

ORGANIZATION

CITY AND STATE

CONTRACT NUMBER

MATERIAL PROCURED UNDER A

☐ DIRECT GOVERNMENT CONTRACT ☐ SUBCONTRACT

1. HAS ANY PART OF THE SPECIFICATION CREATED PROBLEMS OR REQUIRED INTERPRETATION IN PROCUREMENT USE?

A. GIVE PARAGRAPH NUMBER AND WORDING.

B. RECOMMENDATIONS FOR CORRECTING THE DEFICIENCIES

2. COMMENTS ON ANY SPECIFICATION REQUIREMENT CONSIDERED TOO RIGID

3. IS THE SPECIFICATION RESTRICTIVE?

☐ YES ☐ NO *(If "yes", in what way?)*

4. REMARKS *(Attach any pertinent data which may be of use in improving this specification. If there are additional papers, attach to form and place both in an envelope addressed to preparing activity)*

SUBMITTED BY *(Printed or typed name and activity - Optional)*

DATE

DD FORM 1 JAN 66 1426

REPLACES EDITION OF 1 OCT 64 WHICH MAY BE USED.

ESC-FM 1068-68