MILITARY SPECIFICATION

HOLSTER, HIP, M12

This Specification is approved for use within the US Army Armament Munitions and Chemical Command and is available for use by all Departments and Agencies of the Department of Defense.

1. SCOPE

1.1 Scope. This specification covers a Holster, Hip, M12 for use with the M9, 9mm Semiautomatic Pistol.

2. APPLICABLE DOCUMENTS

2.1 Government documents.

2.1.1 Specifications and standards. THe following specifications and standards form a part of this specification to the extent specified herein. Unless otherwise specified, the issues of these documents shall be those listed in the issue of the Department of Defense Index of Specifications and Standards (DoDISS) and supplement thereto, cited in the solicitation.

SPECIFICATIONS

MILITARY

MIL-W-13855	-Weapons: Small Arms and Aircraft Armament Subsystems, General Specification for.
MIL-W-63150	-Weapons and Support Material Standard Quality Assurance Provisions for

STANDARDS

FEDERAL

FED-STD-751	-Stitches, Seams and Stitching

Beneficial comments (recommendations, additions, deletions) and any pertinent data which may be of use in improving this document should be addressed to: Commander, U.S. Army Armament, Munitions and Chemical Command, Attn. AMSMC-QA, Picatinny Arsenal, New Jersey 07806-5000 by using the self-addressed Standardization Document Improvement Proposal (DD Form 1426) appearing at the end of this document or by letter.

MILITARY

MIL-STD-105	-Sampling Procedures and Tables for Inspection by Attributes.
MIL-STD-109	-Quality Assurance Terms and Definitions.
MIL-STD-130	-Identification Marking of U.S. Military Property.

2.1.2 Other Government documents, drawings and publications. The following other Government documents, drawings and publications form a part of this specification to the extent specified herein. Unless otherwise specified, the issues shall be those listed in effect on the date of solicitation.

DRAWINGS

U.S. ARMY ARMAMENT RESEARCH, DEVELOPMENT AND ENGINEERING CENTER (ARDEC)

9388057	Holster, Hip, M12
SPI9388057	Special Packaging Instructions for Holster, Hip, M12

(Copies of specifications, standards, drawings, publications and other Government documents required by contractors in connection with specific acquisition functions should be obtained from the contracting activity or as directed by the contracting activity.)

2.1.3 Order of precedence. In the event of a conflict between the text of this specification and the references cited herein, (except for associated detail specifications, specification sheets or MS standards) the text of this specification shall take precedence. Nothing in this specification, however, shall supersede applicable laws and regulations unless a specific exemption has been obtained.

3. REQUIREMENTS

3.1 First article. When specified in the contract or purchase order, a sample shall be subjected to first article inspection in accordance with the technical provisions herein (see 4.4 and 6.2).

3.2 Materials and construction. Holsters and parts shall conform to the materials, dimensions, conditions and construction requirements specified herein, and on Drawing 9388057 and drawings applicable thereto, and shall be in accordance with the applicable material and construction provisions of MIL-W-13855.

3.2.1 Stitches, seams and stitchings. All stitches, seams and stitchings shall conform to FED-STD-751, type 301 and 304.

3.2.1.1 Repairs of type 301 stitching. Repairs of type 301 stitching shall be as follows:

a. Thread breaks or bobbin run-outs which occur during stitching shall be repaired by restarting the stitching a minimum of one half inch in back of the stitching end.

b. Thread breaks and skipped stitches shall be repaired by overstitching. The stitching shall start a minimum of one inch in back of the defective area, continue over the defective area and onto the existing stitching a minimum of one inch beyond the defective area.

c. When making the repairs specified in a. or b. above, stitching ends are not required to be backstitched.

d. Loose or excessively tight stitching shall be repaired by removing the defective stitching, without damaging the materials, and restitching in the required manner.

3.2.1.2 Repairs of type 304 stitching. Thread breaks, bobbin runouts, skipped or loose stitches shall be repaired by completely removing the stitching, without damaging the materials, and restitching in the required manner.

3.2.2 Thread ends. All thread ends shall be trimmed to a one fourth inch maximum length.

3.2.3 Webbing ends. All exposed webbing ends shall be hot cut or fused to prevent fraying.

3.3 Performance characteristics.

3.3.1 Interface and fit. The holster shall be capable of proper interface and fit with the M9 pistol. Neither complete insertion nor withdrawl of the pistol shall cause functionally significant movement of any of the pistol's controls (e.g., the safety shall not be moved from the safe to the fire position or vice versa; the magazine catch shall not release the magazine; the slide or hammer shall not be retracted so as to cause the hammer to approach the half-cocked position).

3.3.2 D-ring flap. The force required to release the flap's D-ring when an M9 pistol is completely inserted into the holster shall not be less than 6 lbs, nor more than 10 lbs.

3.3.3 D-ring flap. The force required to release the flap D-ring when the holster is empty shall not be less than 3 lbs.

3.3.4 Belt fastener. The force required to release each side of the belt fastener wireform shall not be less than 8 lbs, nor more than 12 lbs.

3.3.5 Belt fastener assembly. The belt fastener assembly wireform shall be capable of free standing within its own weight at 90° to the backplate. The weight required for downward movement beyond 45° shall not exceed 12 ounces.

3.4 Identification marking. Each holster shall be idelibly marked with the letters "US", "M12", part number, manufacturer's name and FSCM code. Markings shall be molded positive or negative in relief on the plastic facing, conform to MIL-STD-130 and be in the location and size indicated on the applicable drawing.

3.5 Instruction sheet. Each holster shall be supplied with an instruction sheet which explains the features, use, attachment, left/right conversion and cleaning of the holster.

3.6 Cleaning rod. Each holster shall be supplied with a cleaning rod conforming to the applicable drawing. The cleaning rod shall be provided in the rod compartment and secured with the strap fastener.

3.7 Insert form. Each holster shall be supplied with an insert form conforming to the applicable drawing. The insert form shall be positioned in the body as specified on the instruction sheet, to allow closing and locking of the flap.

3.8 Workmanship. Workmanship shall be in accordance with the requrements of MIL-W-63150. The holster shall be free of dust, grease, corrosion and other foreign matter. The cleaning method used shall not be injurious to any parts nor shall the parts be contaminated by the cleaning agent. All markings shall be neat and clearly defined. Repairs such as mends, darns, patches and splices are not permitted.

4. QUALITY ASSURANCE PROVISIONS

4.1 Responsibility for inspection. Unless otherwise specified in the contract or purchase order, the contractor is responsible for the performance of all inspection requirements as specified herein. Except as otherwise specified in the contract or purchase order, the contractor may use his own or any other facilities suitable for the performance of the inspection requirements specified herein, unless disapproved by the Government. The Government reserves the right to perform any of the inspections set forth in the specification where such inspections are deemed necessary to assure supplies and services conform to prescribed requirements. The provisions of MIL-W-63150 shall apply.

4.1.1 Responsiblity for compliance. All items must meet all requrements of sections 3 and 5. The inspection set forth in this specification shall become a part of the contractor's overall inspection system or quality program. The absence of any inspection requirements in the specification shall not relieve the contractor of the responsibility of assuring that all products or supplies submitted to the Government for acceptance comply with all requirements of the contract. Sampling in quality conformance does not authorize submission of known defective material, either indicated or actual, nor does it commit the Government to acceptance of defective material.

4.1.2 Component and material inspection. The supplier is responsible for insuring that components and materials are manufactured, examined and tested in accordance with referenced specifications, standards and drawings.

4.2 Quality assurance terms and definitions. Quality assurance terms and definitions used herein are in accordance with MIL-STD-109.

4.3 Classification of inspections. The inspection requirements specified herein are classified as follows:

a. First article inspection (see 4.4).
b. Quality conformance inspection (see 4.5).

4.4 First article inspection.

4.4.1 Sample. The contractor shall submit a first article sample as designated by the Contracting Officer for evaluation in accordance with provisions of 4.4.2. The first article sample shall consist of the test specimens listed below in the quantities indicated.

ITEM DESCRIPTION	DRAWING	QUANTITY
Holster, Hip, M12	9388057	20

4.4.2 Inspections to be performed. The first article shall be selected from pistols produced prior to the beginning of quantity production and submitted for testing in accordance with the contract requirements (see 6.2). The first article shall be representative of production processes to be used during quantity production. The first article shall be subjected to all examinations and tests specified in 4.5.4.1 and such other inspection as necessary to determine that all the requirements of the contract have been met.

4.4.3 Rejection. If any assembly, component, or test specimen fails to comply with any of the applicable requirements, the first article sample shall be rejected. The Government reserves the right to terminate inspection upon any failure of any assembly, component or test specimen to comply with any of the requirements.

4.5 Qualtiy conformance inspection.

4.5.1 In-process inspection. Inspections shall be made at any point or during any phase of the manufacturing process to determine whether cut length, cut parts, marking for location of components, and location of assembled componenet parts are in accordance with specified requirements. In addition, inspection shall be made to assure that punched holes are as specified on applicable drawings. Whenever non-conformance is noted, correction shall be made to the parts affected and lots in-process. Parts that cannot be corrected shall be removed from production.

4.5.2 Lot formation. The formation and presentation of inspection lots shall be in accordance with MIL-STD-105. Unless otherwise specified, an inspection lot shall be one weeks production or 2500 units whichever is less.

4.5.3 Sampling. Sampling for inspection shall be performed in accordance with MIL-STD-105.

4.5.4 Examination. Examination shall be performed on sample holsters from each inspection lot for defects listed in 4.5.4.1. The inspection level shall be Level II per MIL-STD-105 with accept/reject criteria as specified in 4.5.4.1.

QUALITY CONFORMANCE INSPECTION

CLASSIFICATION OF DEFECTS & TESTS

MIL-H-48671 (AR)

PARAGRAPH	TITLE		SHEET 1 OF 3		DRAWING NUMBER 9388057
4.5.4.1	Holster, Hip, M12				NEXT HIGHER ASSEMBLY
CATEGORY	EXAMINATION OR TEST	NO. OF SAMPLE UNITS	AQL OR 100%	REQUIREMENT PARAGRAPH	PARAGRAPH REFERENCE /INSPECTION METHOD
Critical	None defined				
Major					
101.	Interface and fit test		100%	3.3.1	4.5.1
102.	D-ring force test, with M9 pistol		.65	3.3.2	4.5.2
103.	D-ring force test, without M9 pistol		.65	3.3.3	4.5.3
104.	Belt fastener force test		.65	3.3.4	4.5.4
105.	Belt fastener assembly test		.65	3.3.5	4.5.5
106.	Missing parts or incorrect construction		.65	3.2	Visual
107.	Incorrect type or size of thread		.65	3.2	Visual
108.	Two or more stitches per inch less than specified.		.65	3.2	Visual
109.	Row of stitching missing		.65	3.2	Visual
110.	Bartack missing, not within specified tolerance		.65	3.2	Visual
111.	Webbing and edge binding-any hole, tear, cut, not firmly or tightly woven, edges frayed		.65	3.2	Visual
112.	Cloth-any hole, tear, cut, smash or inadequate bonding foam		.65	3.2	Visual

NOTES:

AMSMC Form 1570, 1 Feb 85

Replaces DRSMC-QA (D) Form 160, 1 Aug 83, which may not be used.

CLASSIFICATION OF DEFECTS & TESTS

PARAGRAPH	TITLE		SHEET 2 OF 3		DRAWING NUMBER 9388057
4.5.4.1	Holster, Hip, M12				NEXT HIGHER ASSEMBLY
CATEGORY	EXAMINATION OR TEST	NO. OF SAMPLE UNITS	AQL OR 100%	REQUIREMENT PARAGRAPH	PARAGRAPH REFERENCE /INSPECTION METHOD
113.	Fastener-not functioning properly, failing to effect a secure closure or open freely		.65	3.2	Visual
114.	Fastener-not securely clinched so that it may rotate or become disengaged from the body		.65	3.2	Visual
115.	Rivet-not set securely or set to incorrect length		.65	3.2	Visual
116.	Metallic parts-finish omitted or not as specified		.65	3.2	Visual
117.	Insert-missing or incorrectly positioned		.65	3.7	Visual
118.	*Open seam 1/4 inch more		.65	3.2	Visual
119.	Finding-loosely applied but exposing raw edge of material		.65	3.2	Visual
Minor					
201.	Incorrect seam or stitch type		1.5	3.2.1	Visual
202.	Stitch tension-loose, resulting in a loose bobbin or thread; excessively tight, resulting in puckering or material		1.5	3.2	Visual
203.	Stitching-ends not backstitched as required		1.5	3.2	Visual

NOTES:

*A seam shall be classified as open when one or more stitches joining a seam are broken or when two or more consecutive skipped or run-off stitches occur.

AMSMC Form 1570, 1 Feb 85

Replaces DRSMC-QA (D) Form 160, 1 Aug 83, which may not be used.

CLASSIFICATION OF DEFECTS & TESTS

PARAGRAPH	TITLE		SHEET 3 OF 3		DRAWING NUMBER 9388057
4.5.4.1	Holster, Hip, M12				NEXT HIGHER ASSEMBLY
CATEGORY	EXAMINATION OR TEST	NO. OF SAMPLE UNITS	AQL OR 100%	REQUIREMENT PARAGRAPH	PARAGRAPH REFERENCE /INSPECTION METHOD
Minor					
204.	Stitching-repairs not as specified		1.5	3.2.1.1 3.2.1.2	Visual
205.	Webbing-exposed ends not cut as specified		1.5	3.2.3	Visual
206.	Thread-ends not trimmed to 1/4" maximum length		1.5	3.2.2	Visual
207.	Cloth, webbing or edge binding color not as specified		1.5	3.2	Visual
208.	Metallic parts-area of partial or no finish		1.5	3.2	Visual
209.	Instruction sheet missing		1.5	3.5	Visual
210	Identification marking omitted,illegible, incorrect or incomplete		1.5	3.4	Visual
211.	*Open seam 1/4" or less		1.5	3.2	Visual
212.	Binding-loosely applied but not exposing raw edge of material		1.5	3.2	Visual
213.	Cleaning rod missing		1.5	3.5	Visual
214.	Workmanship		2.5	3.8	Visual

NOTES: *A seam shall be classified as open when one or more stitches joining a seam are broken or when two or more consecutive skipped or run-off stitches occur.

4.5.5 Testing. Sample holsters from each inspection lot shall be tested as specified in 4.5.4.1 in accordance with the test procedures in 4.6.1, 4.6.2, 4.6.3, 4.6.4, and 4.6.5. The inspection level shall be Level I per MIL-STD-105 with accept/reject criteria as specified in 4.5.4.1.

4.5.6 Examination of packaging. An examination shall be made to determine that packaging, packing and marking requirements comply to section 5 requirements. Inspection shall be in accordance with the classification of defects listed below. The sample unit shall be one shipping container fully packaged. The lot size shall be the number of containers in the inspection lot. The inspection level shall be S-4 with an AQL of 4.0 defects per hundred units in accordance with MIL-STD-105.

Characteristic	Defect
Marking	Omitted; incorrect; illegible; of improper size, location, sequence, or method of application.
Workmanship	Improper taping, incomplete closure, bulged or distorted container.
Content	Number of holsters per container is more or less than specified.
Materials	Any omitted, damaged, or not as specified.

4.6 Methods of inspection.

4.6.1 Interface and fit test. Test samples selected for interface and fit testing shall be suspended as in service. A pistol for which the holster was designed shall be manually inserted and withdrawn to determine conformance with the requirements. This operation shall not be repeated more than once and any non-conformance shall constitute a defect.

4.6.2 Loaded holster D-ring force test. Test samples shall be tested on a push-pull force test fixture conforming substantially to Figure 1. The sample holster shall be mounted, an M9 pistol completely inserted, and flap assembly closed and latched. The gage rod shall engage the D-ring and downward force applied, in conjunction with outward movement of the holster body, until the lid latch wire is released from the holster body facing. Failure to meet the specified release force requirement shall constitute a defect.

4.6.3 Empty holster D-ring force test. Test samples shall be tested on a push-pull force test fixture conforming substantially to Figure 1. The sample holster shall be mounted with the flap assembly closed and latched. The gage rod shall engage the D-ring and downward force applied, in conjunction with outward movement of the holster body, until the lid latch wire is released from the holster body facing. Failure to meet the specified release force requirement shall constitute a defect.

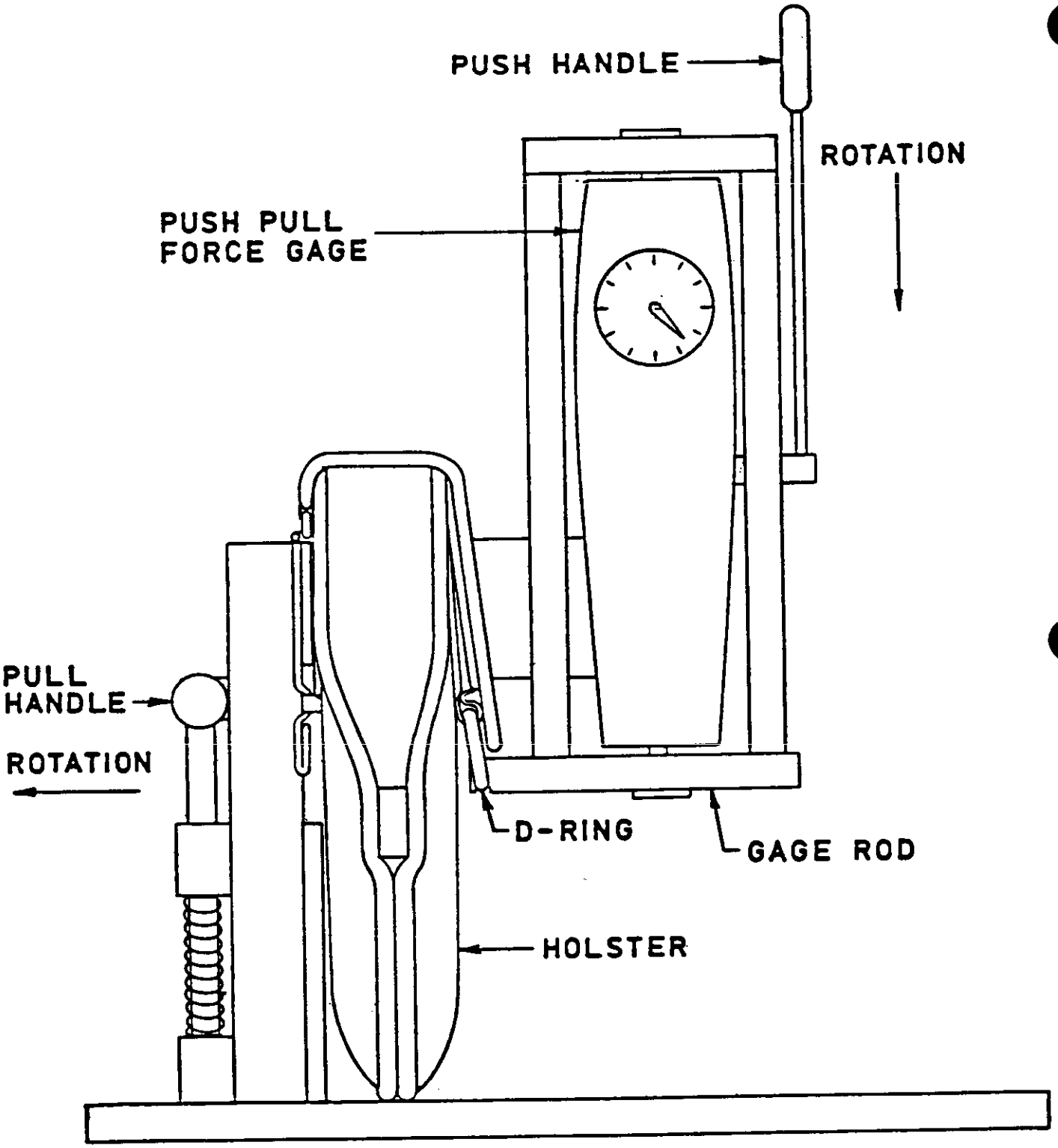

FIGURE 1. Push-pull force test fixture.

4.6.4 Belt fastener force test. Test samples shall be tested on a push force test fixture conforming substantially to Figure 2. The sample holster shall be securely clamped to the test fixture. The gage rod shall engage the belt fastener wire and outward force applied until release is visually noted. Each side of the belt fastener shall be tested for conformance to this requirement. Failure of either side to be within the required tolerance shall constitute a defect.

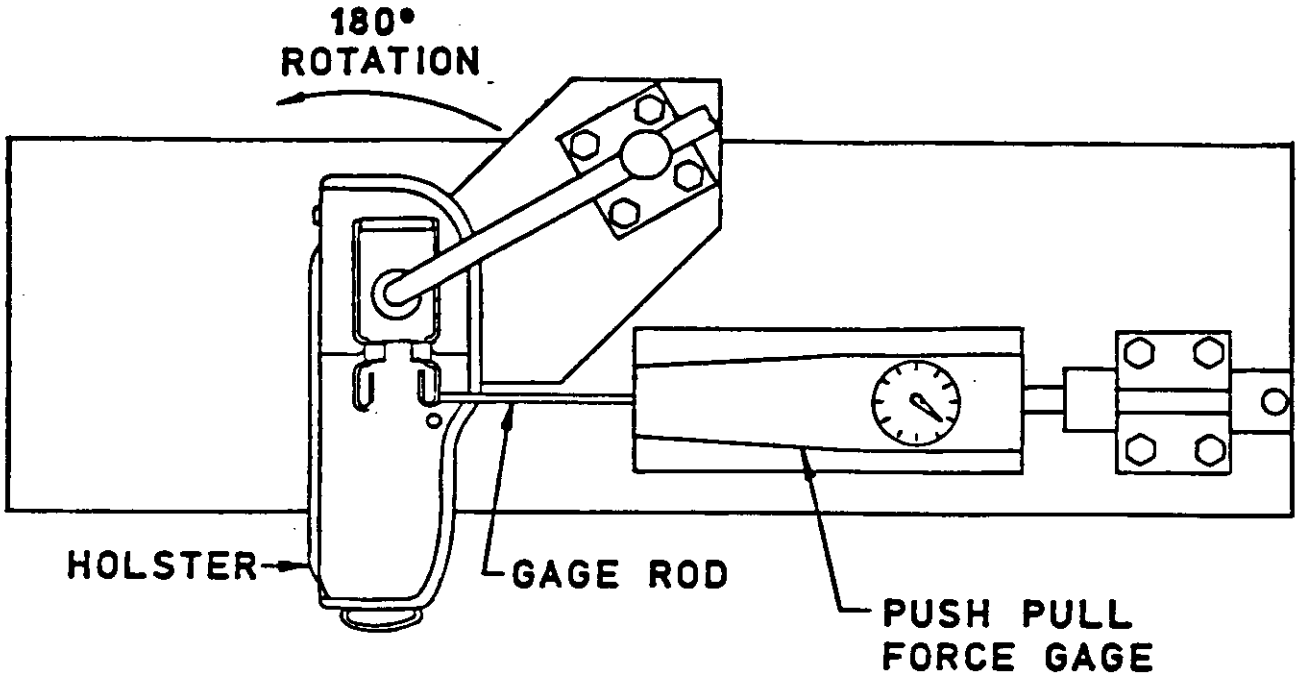

TOP VIEW

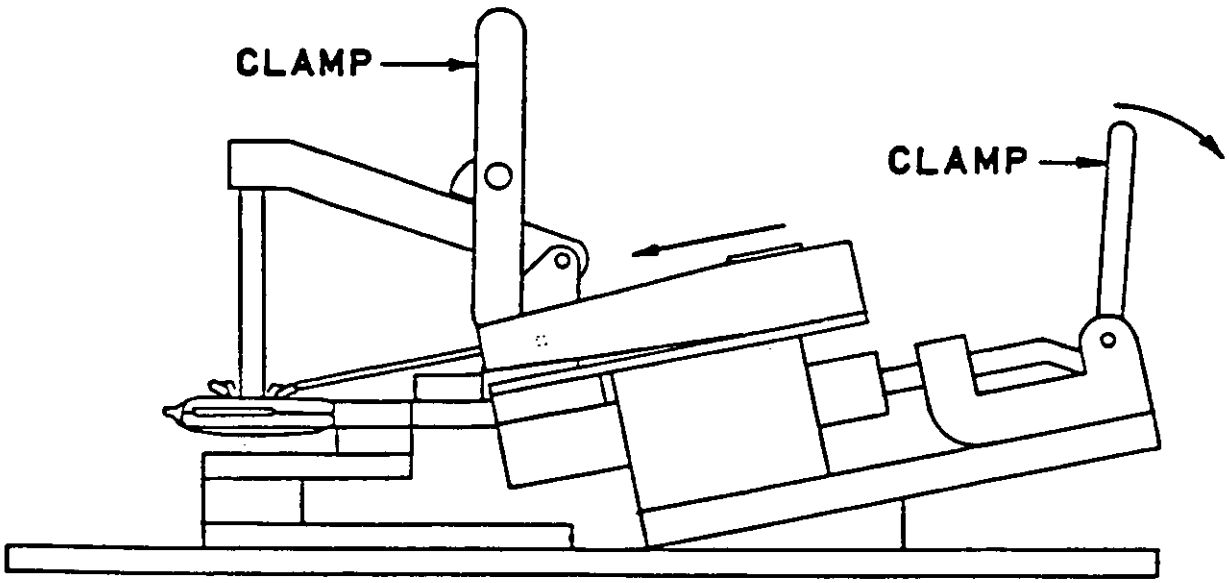

FRONT VIEW

FIGURE 2. Push force test fixture.

4.6.5 Belt fastener assembly test. The belt fastener assembly shall be clamped vertically by the backplate to allow upward and downward movement of the wireform. The wireform shall be raised as specified and dead weight applied to either end to determine conformance with the requirements.

5. PACKAGING

5.1 Level A. Packaging shall be in accordance with Special Packaging Instructions P9388057

5.2 Level B. Packaged as specified in 5.1.

5.3 Level C. Packaged as specified in 5.1.

6. NOTES

6.1 Intended use. The holsters covered by this specification are intended to be used as left or right hip holsters for the M9 pistol.

6.2 Ordering data. Acquisition documents should specify the following:

a. Title, number and date of this specification.

b. Instructions for first article sample (see 3.1 and 4.4)

c. Lists of drawings and specifications pertinent to the holster showing applicable revision dates.

d. Identification of Government furnished property and disposition.

e. Level of packaging (see section 5)

6.3 Inspection equipment design. Design responsibility for all inspection equipment is assigned to the contractor. Contractor designs are required for all inspection equipment and may include commercial equipment which the contractor proposes to use. (Commercial equipment is defined as unmodified equipment which is catalogued and available for purchase by the general public). Contractor designs shall include appropriate operating instructions, calibration procedures and maintenance procedures. Commercial equipment shall be fully described by catalog listings or other means which provide sufficient information to permit identification and evaluation by the Government and may include illustrations and engineering data. Designs shall be prepared for any special fixture(s) required to be used with commercial equipment or with SIE designs if not otherwise covered thereby.

Designs shall be of the category and form (per DOD-D-1000) specified in the Contract Data Requirements List (DD Form 1423). The specification number, paragraph number and defect description/number from section 4 shall be referenced on each contract or design together with the component or assembly drawing number, revision letter and date to which the specific design applies.

6.3.1 Submission of designs for approval. Contractor designs shall be approved by the Government prior to fabrication or procuring the equipment. Designs shall be submitted for approval in accordance with the stipulation, time frame and distribution specified in the Contract Data Requirements List (DD Form 1423) or in the contract. Partial submission of inspection equipment designs is permissible and encouraged. However, the completion date for design review will be based on the date of the final submission of designs and the required delivery schedule as stipulated in the contract. The address for submission of contractor designs will be specified on the contract Data Requirements List, DD Form 1423 in the contract. Unless otherwise specified, data item DI-R-1714 will apply. When the contractor submits inspection equipment designs to the Government for approval, he shall give the following information in his letter of transmittal.

a. The contract number.

b. The contract item (name, model number, etc.)

c. The designs remaining to be submitted and the expected date of submittal.

6.4 Drawings. Drawings listed in Section 2 of this specification under the heading US Army Armament Research, Development and Engineering Center (ARDEC) may also include drawings prepared by, and identified as Edgewood Arsenal, Frankford Arsenal, Rock Island Arsenal, Picatinny Arsenal, US Army Armament Research and Development Command (ARRADCOM) drawings. Technical data originally prepared by these activities are now under the cognizance of ARDEC.

6.5 Subject term (key word) listing.

Holster
Military Specification
M12
Small arms

Custodian:
Army-AR

Preparing activity:
Army-AR

(Project 1005-A716)

STANDARDIZATION DOCUMENT IMPROVEMENT PROPOSAL

(See Instructions – Reverse Side)

1. DOCUMENT NUMBER	2. DOCUMENT TITLE
MIL-H-48671	HOLSTER, HIP, M12

3a. NAME OF SUBMITTING ORGANIZATION

b. ADDRESS *(Street, City, State, ZIP Code)*

4. TYPE OF ORGANIZATION *(Mark one)*

- ☐ VENDOR
- ☐ USER
- ☐ MANUFACTURER
- ☐ OTHER *(Specify)*: _____

5. PROBLEM AREAS

a. Paragraph Number and Wording:

b. Recommended Wording:

c. Reason/Rationale for Recommendation:

6. REMARKS

7a. NAME OF SUBMITTER *(Last, First, MI)* – Optional

b. WORK TELEPHONE NUMBER *(Include Area Code)* – Optional

c. MAILING ADDRESS *(Street, City, State, ZIP Code)* – Optional

8. DATE OF SUBMISSION *(YYMMDD)*

DD FORM 82 MAR 1426

PREVIOUS EDITION IS OBSOLETE.

INSTRUCTIONS: In a continuing effort to make our standardization documents better, the DoD provides this form for use in submitting comments and suggestions for improvements. All users of military standardization documents are invited to provide suggestions. This form may be detached, folded along the lines indicated, taped along the loose edge *(DO NOT STAPLE)*, and mailed. In block 5, be as specific as possible about particular problem areas such as wording which required interpretation, was too rigid, restrictive, loose, ambiguous, or was incompatible, and give proposed wording changes which would alleviate the problems. Enter in block 6 any remarks not related to a specific paragraph of the document. If block 7 is filled out, an acknowledgement will be mailed to you within 30 days to let you know that your comments were received and are being considered.

NOTE: This form may not be used to request copies of documents, nor to request waivers, deviations, or clarification of specification requirements on current contracts. Comments submitted on this form do not constitute or imply authorization to waive any portion of the referenced document*(s)* or to amend contractual requirements.

(Fold along this line)

(Fold along this line)

DEPARTMENT OF THE ARMY

NO POSTAGE NECESSARY IF MAILED IN THE UNITED STATES

OFFICIAL BUSINESS
PENALTY FOR PRIVATE USE $300

BUSINESS REPLY MAIL
FIRST CLASS PERMIT NO. 12062 WASHINGTON D. C.

POSTAGE WILL BE PAID BY THE DEPARTMENT OF THE ARMY

COMMANDER
A S ARMY ARDEC
ATTN: AMSMC-QA
PICATINNY ARSENAL, NJ 07806-5000