Downloaded from http://www.everyspec.com

MIL-H-25579E
24 January 1985
SUPERSEDING
MIL-H-25579D
11 February 1977

MILITARY SPECIFICATION

HOSE ASSEMBLY, TETRAFLUOROETHYLENE, HIGH TEMPERATURE, MEDIUM PRESSURE

This specification is approved for use by all Departments and Agencies of the Department of Defense.

1. SCOPE

1.1 Scope. This specification covers the requirements for medium pressure, high temperature, tetrafluoroethylene hose assemblies, for use in fuel, lubricating oil, water-alcohol, hydraulic and pneumatic systems within the limits specified herein (6.1).

1.2 Classification. The assemblies shall be of the following classes (6.2):

Class 1 - All corrosion resistant steel fittings (450°F)

Class 2 - Combination aluminum alloy and corrosion resistant steel fittings (275°F) -8 size and larger

1.3 Application limitations

1.3.1 Size -3/-4 assembly. The size -3/-4 hose assembly shall not be used in aircraft hydraulic systems.

1.3.2 Pneumatic storage system. Pneumatic storage system application shall not be used.

2. APPLICABLE DOCUMENTS

2.1 Government documents

2.1.1 Specifications and standards. Unless otherwise specified, the following specifications and standards of the issue listed in that issue of the Department of Defense Index of Specifications and Standards (DoDISS), and supplement thereto, in effect on the date the qualifying activity authorizes the conduct of the qualification tests, forms a part of this specification to the extent specified herein.

Beneficial comments (recommendations, additions, deletions) and any pertinent data which may be of use in improving this document should be addressed to: ASD/ENES, Wright-Patterson AFB, OH 45433 by using the self-addressed Standardization Document Improvement Proposal (DD Form 1426) appearing at the end of this document or by letter.

Downloaded from http://www.everyspec.com

SPECIFICATIONS

FEDERAL

P-D-680	Dry Cleaning Solvent
QQ-A-225/4	Aluminum Alloy Bar, Rod, Wire, and Special Shapes; Roller Drawn, of Cold Finished, 2014
QQ-A-225/6	Aluminum Alloy Bar, Rod, and Wire, Rolled, Drawn or Cold Finished, 2024
QQ-A-225/8	Aluminum Alloy Bar, Rod, Wire, and Special Shapes; Rolled, Drawn, or cold Finished, 6061
QQ-A-637	Aluminum Alloy Forgings, Heat Treated
QQ-S-763	Steel Bars, Wire Shapes, and Forgings, Corrosion-Resisting
QQ-W-423	Wire, Steel, Corrosion-Resisting
TT-S-735	Standard Test Fluids: Hydrocarbon
WW-T-700/4	Tube, Aluminum Alloy, Drawn, Seamless, 5052
WW-T-700/6	Tube, Aluminum Alloy, Drawn, Seamless, 6061

MILITARY

MIL-P-775	Packaging of Hose, Hose Assemblies, Rubber, Plastic, Fabric, or Metal (Including Tubing); and Fittings, Nozzles, and Strainers
MIL-D-1000	Drawings, Engineering and Associated Lists
MIL-H-5606	Hydraulic Fluid, Petroleum Base, Aircraft, Missile, and Ordnance
MIL-T-5624	Turbine Fuel, Aviation, Grades JP-4 and JP-5
MIL-T-6845	Tubing, Steel, Corrosion-Resistant (304), Aerospace Vehicle Hydraulic System, 1/8 Hard Condition
MIL-L-7808	Lubricating Oil, Aircraft Turbine Engine, Synthetic Base
MIL-T-8504	Tubing, Steel, Corrosion-Resistant (304), Aerospace Vehicle Hydraulic System Annealed, Seamless and Welded
MIL-A-8625	Anodic Coatings, for Aluminum and Aluminum Alloys
MIL-T-8808	Tubing, Steel, Corrosion-Resistant (18-8 Stabilized) Aircraft Hydraulic Quality
MIL-F-8815	Filter and Filter Elements, Fluid Pressure, Hydraulic Line, 15 Micron Absolute and 5 Micron Absolute, Type II Systems, General Specification for
MIL-S-8879	Screw Threads, Controlled Radius Root, with Increased Minor Diameter; General Specification for
MIL-A-22771	Aluminum Alloy Forgings Heat Treated
MIL-H-27267	Hose, Tetrafluoroethylene, High Temperature, Medium Pressure
MIL-F-27272	Fittings, Tetrafluoroethylene Hose, High Temperature, Medium Pressure, General Requirements for
MIL-T-27602	Trichloroethylene, Oxygen Propellant, Compatible
MIL-H-83282	Hydraulic Fluid, Fire Resistant, Synthetic Hydrocarbon Base, Aircraft, NATO Code Number H-537

Downloaded from http://www.everyspec.com

STANDARDS

MILITARY

MIL-STD-130	Identification Marking of U.S. Military Property
MIL-STD-831	Test Reports: Preparation of
MS8000	Hose Assembly, Detachable Fittings, Tetrafluoroethylene, High Temperature, Medium Pressure, Flare to Flare
MS8001	Hose Assembly, Detachable Fittings, Tetrafluoroethylene, High Temperature, Medium Pressure, Flareless to Flareless
MS8002	Hose Assembly, Detachable Fittings, Tetrafluoroethylene, High Temperature Medium Pressure, Flare to Flange
MS8003	Hose Assembly, Detachable Fittings, Tetrafluoroethylene, High Temperature Medium Pressure, Flareless to Flange
MS8004	Hose Assembly, Detachable Fittings, Tetrafluoroethylene, High Temperature Medium Pressure, Flange to Flange
MS8005	Hose Assembly, Permanently Attached Fittings, Tetrafluoroethylene, High Temperature, Medium Pressure, Flare to Flare
MS8006	Hose Assembly, Permanently Attached Fittings, Tetrafluoroethylene, High Temperature, Medium Flareless to Flareless
MS8007	Hose Asesmbly, Permanently Attached Fittings, Tetrafluoroethylene, High Temperature, Medium Pressure, Flare to Flange
MS8008	Hose Assembly, Permanently Attached Fittings, Tetrafluoroethylene, High Temperature, Medium Pressure, Flareless to Flange
MS8009	Hose Assembly, Permanently Attached Fittings, Tetrafluoroethylene, High Temperature, Medium Pressure, Flange to Flange
MS19059	Balls, Bearing, Ferrous, Chrome Alloy Steel
MS21900	Adapter, Flareless Tube to AN Flared Tube
MS33514	Fitting End, Standard Dimensions for Flareless Tube Connection and Gasket Seal
MS33656	Fitting End, Standard Dimensions for Flared Tube Connection and Gasket Seal

(Copies of specifications, standards, drawings, and publications required by the contractor in connection with specific acquisition functions should be obtained from the procuring activity or as directed by the contracting officer.)

2.1.2 Other publications. The following documents form a part of this specification to the extent specified herein. The issues of the document which are indicated as DoD adopted shall be the issues listed in the current DoDISS and the supplement thereto, if applicable.

American Society for Testing and Materials

ASTM A 262	Standard Recommended Practices for Detecting Susceptibility to Intergranular Attack in Stainless Steel
ASTM D 571	Rubber Hose for Automotive Brake Systems
ASTM D 792	Tests for Specific Gravity and Density of Plastics by Displacement

(Application for copies should be addressd to the American Society for Testing and Materials, 1916 Race St., Philadelphia, PA 19103.)

Downloaded from http://www.everyspec.com

Society of Automotive Engineers Standards

AIR 1228	Standard Impulse Machine Equipment and Operation
AMS 5643	Steel Bars, Forgings, Tubing and Rings, Corrosion Resistant 16.5 Cr - 4.0 Ni - 0.30(Cb+Ta) - 4.0 Cu
AMS 5644	Steel Bars and Forgings, Corrosion Resistant, 17 Cr - 7 Ni - 1Al
AMS 5689	Steel Wire, Corrosion and Heat Resistant, 18 Cr - 9.5 Ni - 0.40 Ti (SAE 30321) Solution Heat Treated
AMS 5743	Steel Bars and Forgings, Corrosion and Moderate Heat Resistant 15.5 Cr - 4.5 Ni - 2.9 Mo - 0.10 Ni Solution Heat Treated, Sub-Zero Cooled, Equalized and Over-Tempered
ARP 603	Impulse Testing of Hydraulic Hose Assemblies, Tubing and Fittings
ARP 908	Hose Fittings Installation and Qualification Test Torque Requirements
AS 611	Tetrafluoroethylene Hose Assembly Cleaning Methods
AS 1055	Fire Resistance and Fire Test Requirements for Fluid System Components

(Applications for copies should be addressed to the Society of Automotive Engineers, 400 Commonwealth Dr., Warrendale, PA 15096.)

National Aerospace Standards

NAS 1760	Fitting End, Flareless Acorn, Standard Dimensions for

(Application for copies should be addressed to National Standards Association, Inc., 1321 Fourteenth St., N.W., Washington, D.C., 20005.)

2.1.3 Order of precedence. In the event of a conflict between the text of this specification and the references cited herein, the text of this specification shall take precedence.

3. REQUIREMENTS

3.1 Qualification. The hose assembly furnished under this specification shall be a product which has been tested, and passed the qualification tests specified herein, and has been listed on or approved for listing on the applicable qualified products list.

3.2 Materials and parts

3.2.1 Hose assembly materials. The hose assembly materials shall be uniform in quality, free from defects, consistent with good manufacturing practice, and shall conform to applicable specifications and the requirements specified herein. All materials not specifically described herein shall be of the highest quality and suitable for the purposes intended.

3.2.2 Metals. Metals shall be of corrosion-resistant steel or aluminim alloy suitably treated to resist corrosion due to fuels, salt spray, and atmospheric conditions to which the hose assembly may be subjected when in storage or during normal service use. Metals used in the hose and fittings shall conform to table I. All end fitting sockets (collars) crimped or swaged, fabricated from type 304 stainless steel, are required to be capable of passing an embrittlement test as specified in ASTM A 262, practice E, prior to assembly to the nipple or swaging operation. Sockets fabricated from stabilized austenitic steel are acceptable without being subjected to the embrittlement test.

Downloaded from http://www.everyspec.com

3.2.3 Screw threads. All coupling nut threads shall be in accordance with MIL-S-8879. A 10 percent increase to MIL-S-8879 maximum thread tolerances is permissible for the coupling nut thread after proof testing, i.e., maximum P.D. may be exceeded by 10 percent of the P.D. tolerance.

3.3 Design. The hose assembly shall consist of a seamless tetrafluoroethylene inner tube, reinforced with corrosion resistant steel reinforcement wires and coupled with corrosion resistant (stainless steel) end fittings (class 1), or aluminum alloy and corrosion resistant end fittings (class 2) suitable for the intended installation. If assemblies with field-attachable fittings are used, the fittings shall comply with MIL-F-27272, the hose shall comply with MIL-H-27267 and the assemblies shall comply with the requirements of this specification and MS8000 through MS8004, as applicable. Assemblies with permanent fittings shall conform to this specification and MS8005 through MS8009, as applicable. Standard hose assemblies shall have flared fittings to mate with MS33656 and flareless fittings according to NAS 1760, to mate with MS33514 in accordance with applicable MS. The hose assemblies shall withstand the strains and vibrations encountered during shipment, storage, installation, and service, within the limits specified herein.

3.3.1 Inner tube. The inner tube shall be a seamless extrusion of virgin tetrafluoroethylene resin. The hose inner tube shall conform to all of the requirements in MIL-H-27267.

3.3.2 Reinforcement. The reinforcement shall consist of corrosion resistant steel wires conforming to the applicable specifications listed in table I. Hose under -16Z shall have a single layer of braid and hose -16Z and above shall have two layers of braid. The letter Z following the dash size signifies that a double layer of wire braid is mandatory. The wires shall be so arranged over the inner tube as to provide sufficient strength to insure conformance with the requirements herein. Broken or missing reinforcing wires shall be cause for rejection. Crossed-over wires shall not be cause for rejection.

3.3.3 Fittings. The end fittings for the hose assembly may be either the field-attachable type conforming to MIL-F-27272 or the permanent type. Materials shall be selected for the specific operating conditions as specified in 3.2.1. For class 2 hose assemblies (size -8 and larger), the socket, and the sleeve if used, shall be stainless steel and the nipple, nut, and elbow (if applicable) shall be aluminum alloy.

3.4 Dimensions and length

3.4.1 Dimensions. Unless otherwise specified, the hose assembly dimensions, except for length, shall be as specified on figure 1.

Downloaded from http://www.everyspec.com

TABLE I. Materials.

Material	Form	Specification
Aluminum Alloy	Bars	QQ-A-225/4 2014-T6 QQ-A-225/6 2024-T351; T-851 and T-6 QQ-A-225/8 6061-T6 and T651
	Forgings	QQ-A-367 6061-T6 MIL-A-22771 7075-T73 and 2014-T6
	Seamless Tubing	WW-T-700/6 6061-T6 Type 1 WW-T-700/4 5052
Corrosion Resistant	Bars & Forgings	QQ-S-763 Class 304 - Cond. A and Cond. B QQ-S-763 Class 304L QQ-S-763 Class 321 - Cond. A QQ-S-763 Class 347 QQ-S-763 Class 302 - Cond. A and Cond. B AMS 5643 17-4PH AMS 5644 17-7PH AMS 5743 AM-355
	Tubing	MIL-T-8808 Type I or Type II, Comp. 321 MIL-T-8808 Type I or Type II, Comp. 347 MIL-T-6845 MIL-T-8504 Comp. 304
	Wire	QQ-W-423 Comp. 302 QQ-W-423 Comp. 304 QQ-W-423 Comp. 305 AMS 5689 Comp. 321

Downloaded from http://www.everyspec.com

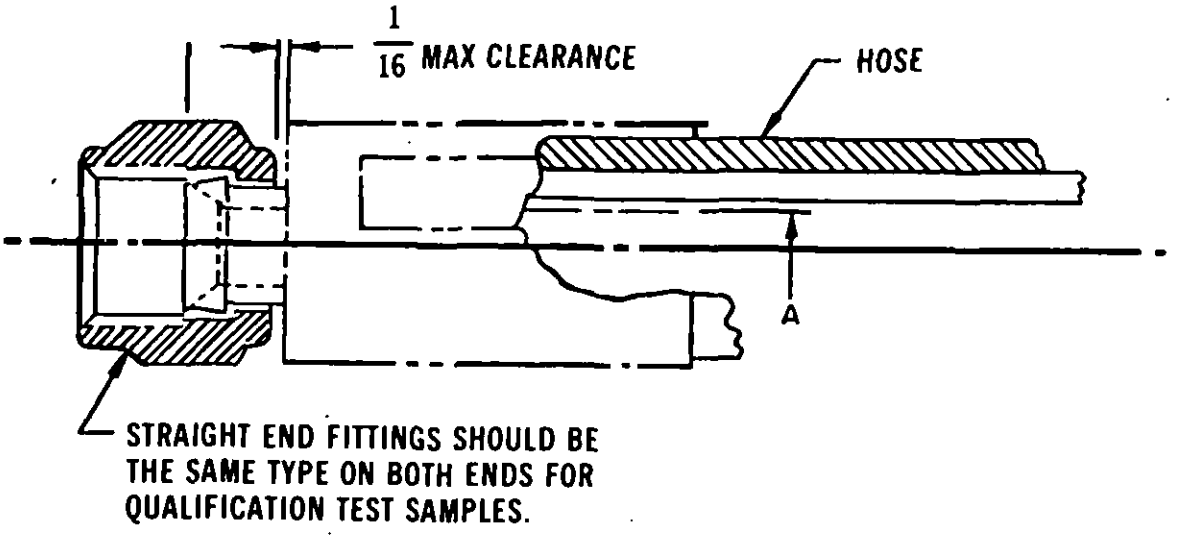

Assembly Size	Reference OD Tubing Size	A Min Dia. (Nipple)	Max Hose Wt (lbs/ft.)	Max Wt (lbs) per fitting Class 1	Max Wt (lbs) per fitting Class 2	Max. Hose Outside Dia. (inches)	Minimum Ball Size for Elbows	
							Dia. A (inches)	MS19059 Dash No.
(a)-3/-4	3/16	0.080	0.087	0.069	0.041	0.343	0.049	n/a
-4	1/4	0.132	0.087	0.094	0.054	0.343	0.094	1006
-5	5/16	0.193	0.099	0.114	0.072	0.406	0.156	1010
-6	3/8	0.256	0.123	0.139	0.067	0.469	0.219	1013
-8	1/2	0.340	0.158	0.263	0.121	0.585	0.281	1015
-10	5/8	0.430	0.205	0.377	0.173	0.687	0.375	1018
-12	3/4	0.548	0.327	0.442	0.203	0.812	0.500	1022
-16Z	1	0.778	0.580	0.864	0.387	1.140	0.750	1630
-20Z	1 1/4	1.000	0.746	1.373	0.661	1.390	0.969	1637
-24Z	1 1/2	1.250	0.972	1.599	0.948	1.707	1.188	1641

NOTE: The Z suffix indicates mandatory use of two wire braids for added strength.

(a) Swivel nut and cone seat of nipple shall mate with MS33656-3 fitting. The remaining portion of the assembly shall mate with the the -4 size hose.

DIMENSIONS IN INCHES

FIGURE 1. Hose assembly dimensions.

Downloaded from http://www.everyspec.com

3.4.2 Length. Hose assembly lengths shall be specified in the following increments only:

12 inches long and under - Not less than 1/8 inch

12 to 18 inches long - Not less than 1/4 inch

Over 18 inches long - Not less than 1/2 inch

Tolerances on hose assembly lengths shall be as follows:

±1/8 inch for lengths under 18 inches

±1/4 inch for lengths from 18 to 36 inches

±1/2 inch for lengths from 36 to 50 inches

±1 percent for lengths over 50 inches.

3.5 Performance. The hose assemblies shall meet the following performance requirements. Test temperatures for class 2 hose assemblies shall be 275°F wherever a higher temperature is specified herein.

3.5.1 Proof pressure. The hose assemblies shall be subjected to the proof pressure specified in table II when tested in accordance with 4.6.2. There shall be no leakage of the hose assembly nor permanent deformation of the end fittings.

3.5.2 Leakage. There shall be no leakage through the hose nor around the fittings when tested to 70 percent of the rated burst pressure of the assembly as specified in 4.6.3.

3.5.3 Burst pressure. The hose assemblies shall not burst, the end fitting shall not blow off nor loosen, and there shall be no external leakage from the hose or end fitting at any pressure below the burst pressure specified when tested in accordance with 4.6.4 and 4.6.5.

3.5.4 Conductivity of hose assembly. Hose assemblies of sizes -3/-4 through -8 shall be capable of conducting a direct current equal to or greater than 6 microamperes, and sizes -10 through -24Z a current equal to or greater than 12 microamperes with a test potential of 1,000 volts dc when tested as specified in 4.6.6.

3.5.5 Impulse. The hose assemblies shall be capable of withstanding 100,000 impulse cycles at 400°F when tested as specified in 4.6.7.

3.5.6 Fuel resistance. The hose assemblies shall withstand fuel immersiion at 260°F as specified in 4.6.8 with no deterioration as evidenced by leakage at proof or burst pressure.

3.5.7 Pneumatic effusion. The effusion rate of the assemblies shall not exceed the values listed in 4.6.9.

3.5.8 Pneumatic surge. The hose assemblies shall not leak when proof tested after being subjected to the test specified in 4.6.10.

TABLE II. Physical requirements of hose assemblies.

Size Dash No.	Length of 6 Samples for Impulse Test (Inches)	Length of 12 Samples for all Other Test (Inches)	Operating Pressure (PSI MAX)	1/ Proof Pressure (PSI MIN)	Burst Pressure Room Temp. (PSI MIN)	Burst Pressure High Temp. (PSI MIN)	Minimum Bend Radius (Inside of Bend) (Inches)
-3/-4	14	18	1,500	3,000	12,000	7,000	2
-4	14	18	1,500	3,000	12,000	7,000	2
-5	16	18	1,500	3,000	10,000	6,500	2
-6	18	18	1,500	3,000	9,000	6,500	4
-8	21	18	1,500	3,000	8,000	6,000	4-5/8
-10	23-1/2	18	1,500	3,000	7,000	5,500	5-1/2
-12	27-1/2	18	1,000	2,000	5,000	3,500	6-1/2
-16Z	18	18	1,250	2,500	5,000	3,500	7-3/8
-20Z	18	18	1,000	2,000	4,000	3,000	11
-24Z	18	18	1,000	2,000	4,000	3,000	14

1/ Assemblies having aluminum flange fittings shall be proof pressure tested to the pressures listed under "Operating Pressure" above.
Assemblies having steel flange fittings shall be proof pressure tested to the values listed in the "Proof Pressure" column.

Downloaded from http://www.everyspec.com

Downloaded from http://www.everyspec.com

3.5.9 Stress degradation. The hose assemblies shall not exceed the air leakage as specified when tested in accordance with 4.6.11 and shall not leak when pressurized as specified in 4.6.11.11.

3.5.10 Corrosion. The hose assemblies shall function satisfactorily at the completion of 172 hours of cycling in accordance with 4.6.12.

3.5.11 Overtightening torque. Two fittings of each size in each style to be qualified, flared and flareless, shall be subjected to the overtightening torque test in accordance with 4.6.13.

3.5.12 Elongation and contraction. The hose shall not change in length in excess of +0.20 to -0.30 inches when subjected to the operating pressure specified in table II and tested in accordance with 4.6.14.

3.5.13 Low temperature flexing. The hose assembly when filled with the applicable test fluid, placed in a cold chamber for 24 hours at -67 $\pm 2^{\circ}$F, and subjected to flexing as specified in 4.6.16, shall not show damage.

3.5.14 Vacuum. The hose assembly shall not collapse nor show any other defects when subjected to a temperature of 450 $\pm 10^{\circ}$F with the assembly in the minimum bend radius condition for four hours while a negative pressure as specified in 4.6.17 is maintained.

3.5.15 Cubical expansion. The volumetric expansion, when determined at a pressure of 1000 psi, shall not exceed 0.028 c.c. per inch of full length for sizes -3/-4 and -4, and 0.044 c.c. per inch of free length for size -5 when tested in accordance with 4.6.15.

3.5.16 Pneumatic leakage. The hose assembly shall withstand pneumatic pressure for five minutes at room temperature without any visible air bubbles after one minute at pressure when tested in accordance with 4.6.19.

3.6 Part numbering of interchangeable parts. All parts having the same manufacturers part number shall be functionally and dimensionally interchangeable. The item identification and part number requirements of MIL-D-1000 shall govern the manufacturer's part numbers and changes thereto.

3.7 Identification of product. Equipment, assemblies, and parts shall be marked for identification in accordance with MIL-STD-130. The following special marking shall be added:

3.7.1 Fittings. The manufacturer's name or trademark shall be permanently marked on all end fittings.

3.7.2 Assembly. The assembly shall be identified by a permanent marking on the end fitting (permanent type only), or on a permanent band containing the specification number, operation pressure in psi, manufacturer's name and MS part number, date of assembly, and hose liner source. The hose liner source shall be identified by the manufacturer's Federal Supply Code for Manufacturer's (FSCM) number. The band shall be not wider than 1 inch and shall be so designed as to remain tight on the hose to prevent relative movement and resultant chafing.

Downloaded from http://www.everyspec.com

3.8 Finish

3.8.1 Aluminum parts. Unless otherwise specified, aluminum parts shall be finished in accordance with MIL-A-8625, type II, and dyed yellow on flareless parts and blue on flared parts. The color fastness requirement of MIL-A-8625 does not apply.

3.8.2 Corrosion-resistant steel parts. Unless otherwise specified, corrosion-resistant steel parts shall be passivated by immersion in a solution of 2 percent sodium dichromate in nitric acid of a concentration of 15 to 25 percent by volume for 15 or 30 minutes at a temperature of 125° ±5°F. Parts shall then be thoroughly rinsed in water and dried.

3.9 Workmanship. The hose assembly, including all parts, shall be constructed and finished in a thoroughly workmanlike manner. All surfaces shall be free from burrs. All sealing surfaces shall be smooth, except that annular tool marks up to 100 microinches rms maximum will be acceptable.

3.9.1 Tolerances. All pertinent dimensions and tolerances, where interchangeability, operation, or performance of the hose assembly may be affected shall be specified on all drawings.

3.9.2 Cleaning. All hose assemblies shall be free from oil, grease, dirt, moisture, cleaning solvents and other foreign materials both internally and externally, and shall meet the requirements of 4.6.20 when cleaned per class 0 of ARP 611.

4. QUALITY ASSURANCE PROVISIONS

4.1 Responsibility for inspection. Unless otherwise specified in the contract, the contractor is responsible for the performance of all inspection requirements as specified herein. Except as otherwise specified in the contract, the contractor may use his own or any other facilities suitable for the performance of the inspection requirements specified herein, unless disapproved by the Government. The Government reserves the right to perform any of the inspections set forth in the specification where such inspections are deemed necessary to assure supplies and services conform to prescribed requirements.

4.2 Classification of inspections. The inspection and testing of hose assemblies shall be classified as follows:

a. Qualification inspections (4.4)

b. Quality conformance inspections (4.3).

4.3 Qualification inspections

4.3.1 Test sample. Test samples shall consist of the number of samples and lengths specified in table II. If the field-attachable fittings are used, the fittings shall comply with MIL-F-27272 and be used with MIL-H-27267 hose. Where permanent end fittings are used and more than one more source of hose or hose liner are used, qualification tests shall be conducted on test samples constructed using hose or hose liner from each source. Where hose other than MIL-H-27267 hose is used, the requirements of 4.6.18 (specific gravity) shall be demonstrated by tests. The test sequence used shall be as specified in table III. The samples shall be in accordance with figure 1.

TABLE III. Qualification test schedule.

Sample No.	Fittings 1 thru 4	Hose Assemblies													Tube
		5	6	7	8	9	3/ 10	11	12	13	14	1/ 15	1/ 16	2/ 17 thru 22	23 thru 24
Para Ref	4.6.1	4.6.1	4.6.1	4.6.1	4.6.1	4.6.1	4.6.1	4.6.1	4.6.1	4.6.1	4.6.1	4.6.1	4.6.1	4.6.1	4.6.1
						4.6.2	4.6.2			4.6.2	4.6.2				
	4.6.13	4.6.2	4.6.2	4.6.2	4.6.2	4.6.19	4.6.19	4.6.2	4.6.2	4.6.15	4.6.2	4.6.2	4.6.2	4.6.2	4.6.18
		4.6.8	4.6.14	4.6.12	4.6.12	4.6.9	4.6.9	4.6.11	4.6.11	4.6.6	4.6.15	4.6.3	4.6.3	4.6.7	
		4.6.16	4.6.15	4.6.4	4.6.5	4.6.10	4.6.10		4.6.16		4.6.16	4.6.4	4.6.4		
						4.6.2	4.6.2								
		4.6.17	4.6.8			4.6.3	4.6.3		4.6.17		4.6.17				
						4.6.4	4.6.5								

1/ These samples are with flareless type fitting ends.
2/ These samples shall have a 90-degree elbow fitting on one end of the hose and a straight type fitting on the other end of the hose. If approval is being sought for both bent tube and forged elbow configuration, then one half of the samples 17 through 22 shall use the other type. Sample 10 may have either the bent tube or forged configuration.

Downloaded from http://www.everyspec.com

Downloaded from http://www.everyspec.com

4.3.1.1 Additional test samples. When samples of assemblies having flared style fitting ends are to be submitted for qualification testing and approval, two additional assemblies having flareless style fitting ends of the size and class to be qualified may also be submitted. They shall be subjected to the examination of product (4.6.1), proof pressure (4.6.2), leakage (4.6.3), and room temperature burst pressure (4.6.4) tests. Satisfactory results of these tests on the flareless style fitting assemblies shall constitute qualification approval of these assemblies in the sizes inspected. When samples of assemblies having flareless style fitting ends are submitted, two additional assemblies having flared style fitting ends may be submitted for qualification testing in accordance with this schedule of four tests. Satisfactory results of these tests shall constitute approval of assemblies having flared style fitting ends in the sizes inspected.

4.3.2 Criteria for failure. Unless otherwise specified, any evidence of leakage at pressures below the specified pressures or failure of the assembly to satisfactorily conform to the detail requirements of this specification as determined by the procuring activity shall be evidence of failure.

4.3.3 Qualification tests. Qualification tests shall consist of all tests described under 4.6, with the exception of the schedule described in 4.3.1.1.

4.3.4 Test report and certification. Upon request, the steel wire strand manufacturer shall furnish a certified qualification test report showing that the product conforms to this specification. The test report shall include actual results of the tests specified herein (see 6.3.1).

4.3.5 Tests conducted at other than procuring activity location. When tests are conducted at a location other than the laboratory of the procuring activity, the following shall be furnished to that activity.

a. Test report. Three copies of a test report in accordance with MIL-STD-831.

b. Test samples. The samples that were tested and three untested samples of each size for which qualification is desired, if requested by the qualifying activity.

c. Detail and assembly drawings. Three sets of legible detail and assembly drawings of each new model of hose assembly submitted for qualification tests. The assembly drawing shall show a cut-away section showing all details in their normal assembly position and shall carry part numbers of all details and sub-assemblies.

4.3.6 Retention of qualification. To retain qualification, the manufacturer shall forward certification at 2-year intervals to the qualifying activity stating that the company still has the capabilities and facilities necessary to produce the item and that the product has not been changed in any way. The qualify activity shall establish the initial reporting date.

4.4 Quality conformance. Quality conformance tests shall consist of:

a. Individual test

b. Sampling tests

c. Periodic control tests.

Downloaded from http://www.everyspec.com

4.4.1 Individual tests. Each hose assembly shall be subject to the following tests as described under 4.6:

a. Examination of product (4.6.1)

b. Proof pressure test (4.6.2)

NOTE: When agreed upon between manufacturer and procuring activity, the pneumatic leakage test may be substituted for the proof pressure test.

4.4.2 Sampling tests. The following tests shall be performed on 8 hose assemblies with straight fittings at each end for each sampling lot. The sampling lot shall consist of approximately, but not more than, 3000 hose assemblies, all of one dash size, manufactured under essentially the same conditions, but not necessarily during one continuous run. One hose assembly tested for each sub lot of 375 hose assemblies is sufficient for protracted or small assembly run conditions.

4.4.2.1 The sampled hose assemblies shall be subjected to the following tests in the order indicated:

a. Internal cleanliness test (4.6.20)

b. Leakage test (4.6.3)

c. Room temperature burst test (4.6.4)

4.4.3 Periodic control tests. The following tests shall be performed on 8 hose assemblies, individually selected at random from each periodic control lot. The periodic control lot shall consist of approximately, but not more than, 20,000 feet of hose, all of one dash size, manufactured under essentially the same conditions, but not necessarily during one continuous run. Two hose assemblies tested for each sub lot of 5000 feet is sufficient under protracted or small assembly run conditions. In the latter case, one assembly will be tested to 4.4.3.1a and then 4.4.3.1b, and the other assembly subjected to 4.4.3.2a and then 4.4.3.2b.

4.4.3.1 Four hose assemblies shall be subjected to the following tests in the order indicated.

a. Elongation and contraction test (4.6.5)

b. Impulse test (unaged samples only) (4.6.7)

4.4.3.2 Four hose assemblies shall be subjected to the following tests in the order indicated.

a. Stress degradation test (4.6.11; 4.6.11.11 may be omitted)

b. Conductivity test (4.6.6)

Downloaded from http://www.everyspec.com

4.4.4 Rejection and retest. When one or more items selected from a lot fails to meet the specification, all items in the lot shall be rejected.

4.4.4.1 Resubmitted lots. Once a lot, or part of a lot, has been rejected by a procuring activity (government or commercial), before the lot is resubmitted, full particulars concerning the cause of previous rejection and the action taken to correct the defects in the lots shall be furnished in writing by the contractor.

4.4.5 Destructive test samples. Prior to testing, a letter (D) shall be impression-stamped on each end fitting of those assemblies to be used for destructive tests (4.4.2 and 4.4.3).

4.5 Test conditions

4.5.1 Fitting ends. Qualification tests shall be conducted on assemblies with end fittings in accordance with table III. Satisfactory qualification tests on these hose assemblies shall constitute qualification approval on hose assemblies using other fitting that have an identical hose attachment method and design as specified on MS 8000 thru MS 8009.

4.6 Test method

4.6.1 Examination of product. The hose assembly shall be examined to determine conformance to this specification with respect to materials, size, workmanship, or other requirements specified herein for which no tests are specified. Broken or missing reinforcing wires shall be cause for rejection. Crossed-over reinforcing wires shall not be cause for rejection.

4.6.2 Proof pressure test. The hose assembly shall be subjected to the applicable proof pressure specified in table II for a minimum period of 30 seconds and a maximum of five minutes. For individual tests specified in 4.3.1, test fluid shall be water only. During qualification testing, hydraulic fluid conforming to MIL-H-5606 or MIL-H-83282 may be used. There shall be no evidence of permanent deformation, damage, or leakage from the hose assembly during or at the completion of these tests.

4.6.2.1 Proof pressure tests for hose assemblies with fire sleeves. Proof pressure of these hose assemblies shall be done with water as the test media and hold a minimum of 2 minutes. During this time, the fire sleeves over the hose assemblies shall be pulled back from the end fittings if this is possible.

4.6.3 Leakage test. Two hose assemblies of each size shall be subjected to this test, using test fluid in accordance with MIL-H-5606, MIL-H-83282, or water. The assemblies shall be pressurized, while at room temperature, to 25 psi for a minimum of 5 minutes. The pressure shall be increased to a value equal to 70 percent of the rated room temperature burst pressure specified in table II and again held for a minimum of 5 minutes. The pressure shall then be completely released and again increased to 70 percent of the rated room temperature burst pressure and held for a minimum of 5 minutes. Any evidence of leakage shall constitute failure.

Downloaded from http://www.everyspec.com

4.6.4 Room temperature burst pressure test. Two hose assemblies of each size shall be subjected to a pressure sufficient to burst the assemblies with a rate of pressure rise equal to 20,000 ±5,000 psi per minute. The assemblies shall be observed throughout the test and the type of failure and the pressure required for failure shall be recorded. The assemblies shall not leak at any pressure below the specified room temperature burst pressure listed in table II. The test fluids shall be the same as specified in 4.6.3.

4.6.5 High temperature burst pressure test. Two hose assemblies of each size shall be filled with a suitable test fluid and soaked for one hour with ambient and fluid temperature at 450 ±10°F. After one hour, the pressure shall be raised to the rated operating pressure for five minutes. The pressure shall be increased at the rate of 20,000 ±5,000 psi per minute until bursting or leakage occurs. Any leakage at pressures below the high temperature burst pressure listed in table II shall be evidence of failure.

4.6.6 Conductivity test

4.6.6.1 The test specimen shall be a length of hose (with braid and one end fitting) as shown in figure 2. The inner surface of the tube shall be washed first with solvent conforming to P-D-680 and then with isopropyl alcohol conforming to TT-I-735, to remove surface contamination, and thoroughly dried at room temperature. The wire braid shall flare out as shown in figure 2 to prevent contact with the end of the tetrafluoroethylene tube. One MS21900 steel fitting of appropriate size shall be assembled to the hose end fitting as shown in figure 2.

4.6.6.2 The test specimen shall then be arranged vertically as shown in figure 2. The relative humidity shall be kept below 70 percent and room temperature between 60° and 90°F. One thousand volts maximum dc shall be applied between the upper or salt water solution or mercury electrode and the lower (MS 21900 fitting) electrode. The salt water solution shall be 450 grams Na Cl in 1 liter chemically pure water.

4.6.6.3 The current shall be measured with an instrument with a sensitivity of at least 1 microampere (1×10^{-6} ampere). The current measured shall be equal to or greater than 6 microamperes for sizes -3/-4 through -8 and equal to or greater than 12 microamperes for sizes -10 through -24Z.

4.6.7 Impulse tests. The impulse test shall be conducted as follows:

a. Six hose assemblies of each size and of the lengths specified in table II shall be subject to this test. Two samples shall be immersed in lubricating oil conforming to or MIL-L-7808 (or one of the following: (1) General Electric Co. F-50, or equal: (2) Dow Chemical Co. F-60, or equal; (3) Oronite Chemical Co. 8200, or equal), at 400° ±10°F for 168 hours. Two of the other samples shall be aged in air at 400° ±10°F for 168 hours, and two shall remain unaged. The four aged samples and the two unaged samples shall then be subjected to the test specified in 4.6.2.

b. All sizes through -12 shall be installed in the impulse tester with a bend radius equal to the minimum specified in table II. Both ends of the samples shall be connected to a rigid support. Sizes -16Z and larger shall be installed straight, and one end may be left free.

Downloaded from http://www.everyspec.com

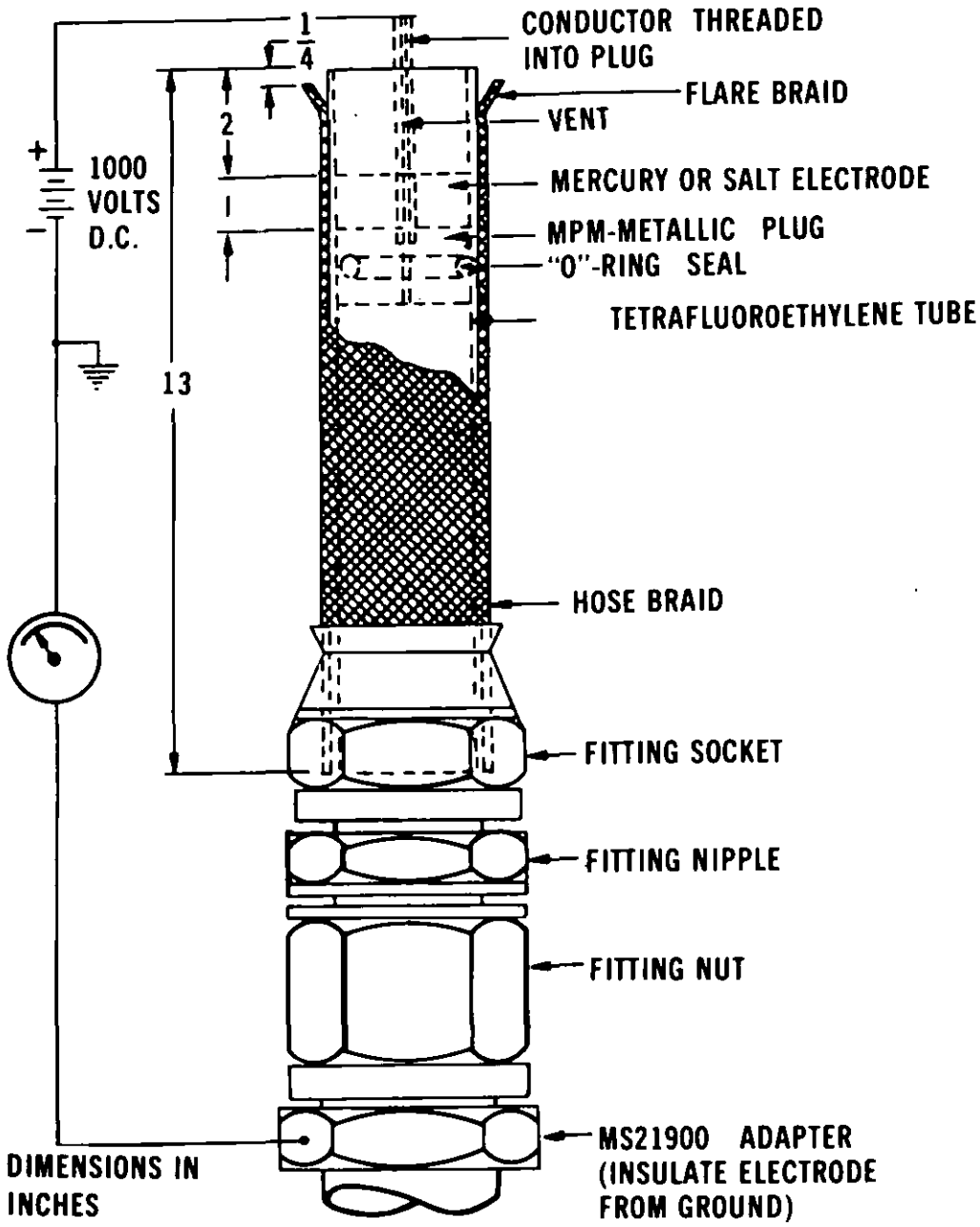

FIGURE 2. Conductivity test diagram.

Downloaded from http://www.everyspec.com

c. The pressure impulse test and equipment shall conform to ARP 603 and AIR 1228. Electronic measuring devices shall be used to determine and control the impulse pressures according to operating pressures specified in table II with peak pressures of 125 percent for hose sizes -3/-4 through -16Z. The impulse testing shall be performed at a rate of 70 ±10 cycles per minute (CPM). All sizes shall be subjected to 100,000 pressure impulse cycles. The rate of pressure rise shall be 175,000 psi/sec min. The temperature of the test fluid and ambient air shall be maintained at 400° ±10°F. The test fluid shall be the same as for the immersion test. Any signs of leakage, blowoff of fittings, or other malfunctioning of the assemblies prior to completion of the 100,000 cycles shall be considered cause for rejection.

4.6.8 Fuel resistance test. Two test samples of each size shall be subjected to a fuel resistance test as follows:

4.6.8.1 The samples shall be filled with solvent conforming to P-D-680 or fuel conforming to MIL-T-5624 and placed in an oven maintained at a temperature of 260° ±10°F for a period of 48 hours. Precautions shall be taken to assure that the samples do not come in contact with parts of the oven that are at a higher temperature. Oven temperatures high enough to ignite the fuel shall be avoided. Pressures equal to the operating pressures specified in table II shall be applied to the test samples throughout the 48-hour period.

4.6.8.2 At the end of the 48-hour period, the test samples shall be depressurized, drained, and allowed to cool for 20 minutes at room temperature. The samples shall be filled with fluid conforming to TT-S-735, type III, and a pressure equal to the rated operating pressure applied and maintained for a minimum of two hours at room temperature. There shall be no evidence of leakage from the hose assembly during or at the completion of this test.

4.6.9 Pneumatic effusion test. Two hose assemblies of each size shall be used for this test. The assemblies shall be subjected to the operating pressure in table II for one hour at room temperature. The total amount of effusion through the hose and two fitting shall be collected over the last 1/2 hour of testing and shall not exceed the values in table IV. The collecting device will be similar to that depicted in figure 3.

4.6.10 Pneumatic surge test. Two hose assemblies of each size that were subjected to the effusion test shall be used for this test. The assemblies shall be installed in test apparatus in accordance with figure 4. They shall then be subjected to the rated operating pressure specified in table II for 25 minutes at room temperature. After this period of pressurization, the exhaust valve shall be opened within 50 milliseconds to permit the rapid discharge of the compressed gas. After five minutes, the valve shall be closed and the pressure recycled. This sequence of 25 minutes at operating pressure and five minutes at zero pressure shall be repeated a total of 16 times. The hose assemblies shall then be subjected to the rated proof pressure specified in table II for a minimum of two minutes. Any evidence of leakage at the end fittings shall constitute failure. The filter downstream of the hose shall be examined for evidence of inner tube degradation. Any evidence of degradation shall constitute failure.

Downloaded from http://www.everyspec.com

TABLE IV. Effusion (c.c.) per ft. of hose per 1/2 hour.

Size	Effusion at Room Temp.
-3/-4	4.0
-4	4.0
-5	5.0
-6	5.0
-8	5.0
-10	5.0
-12	6.0
-16Z	8.0
-20Z	8.0
-24Z	8.0

Downloaded from http://www.everyspec.com

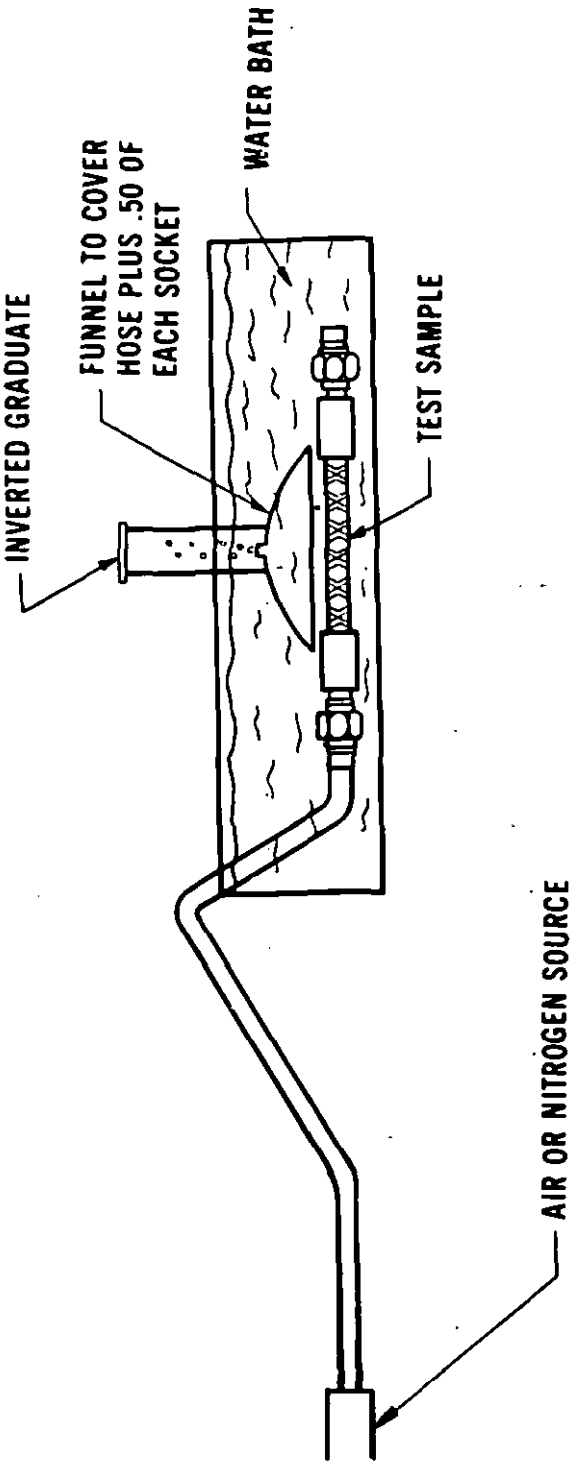

FIGURE 3. Pneumatic effusion test diagram.

Downloaded from http://www.everyspec.com

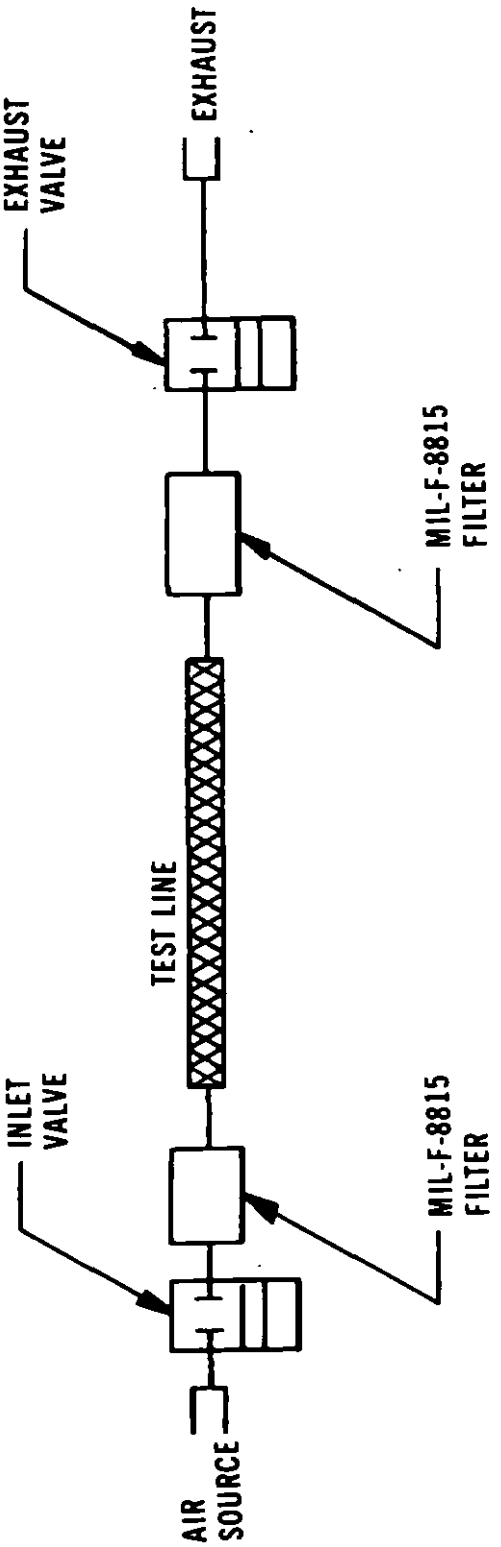

FIGURE 4. Pneumatic surge test diagram.

Downloaded from http://www.everyspec.com

4.6.11 Stress degradation test

4.6.11.1 Two hose assemblies of each size shall be subjected to this test. The hose assemblies shall be filled with oil conforming to MIL-L-7808.

4.6.11.2 The hose assemblies shall then be placed in an oven which shall be maintained at a temperature of 450°F ±10°F. Precautions shall be taken to assure that the hose assemblies do not come in contact with parts of the oven that are at a higher temperature. A pressure equal to the rated operating pressure specified in table II shall be applied to the hose assemblies.

4.6.11.3 After a minimum of 20 hours at 450°F, the pressure shall be gradually released and the assemblies shall be removed from the oven, drained and cooled to room temperature. The assemblies shall then be furnished with a quantity of new TT-S-735 type III fluid, equivalent in volume to at least twice the test sample volume and drained.

4.6.11.4 The hose assemblies shall then be filled with new TT-S-735 type III fluid. A pressure equal to the rated operating pressure specified in table II shall be applied and held for a minimum of two hours at room temperature.

4.6.11.5 The hose assemblies shall then be emptied and filled with oil as specified in 4.6.11.1. The tests specified in 4.6.11.2, 4.6.11.3, and 4.6.11.4 shall be repeated.

4.6.11.6 The hose assemblies shall then be filled with TT-S-735 type III fluid and individually capped. While at room temperature, the assemblies shall be bent around a mandrel having a radius equal to the minimum bend radius as specified in table II. The assemblies shall be bent around the mandrel and straightened for 20 cycles. The assemblies shall be held by the fitting while the bending is being preformed. The tests specified in 4.6.11.1, 4.6.11.2, 4.6.11.3 and 4.6.11.4 shall be conducted for the third time.

4.6.11.7 Within 4 hours after the final two-hour pressurization period with TT-S-735 type III fluid, the assemblies shall be drained and flushed with trichloroethylene (MIL-T-27602) and placed in an oven for one hour. The temperature of the oven shall be maintained at 160°F ±10°F.

4.6.11.8 Within eight hours after completion of the drying process, the assemblies shall be subjected to an air-under-water test. To conduct this test, the hose assemblies shall be installed in an apparatus similar to figure 5.

4.6.11.9 This apparatus with the hose assembly installed shall be immersed in water containing no wetting agent. A pressure equivalent to the rated operating pressure specified in table II shall be applied for a period of 15 minutes to allow any entrapped air in the hose to escape. During this period, the shield of the test apparatus shall be closed.

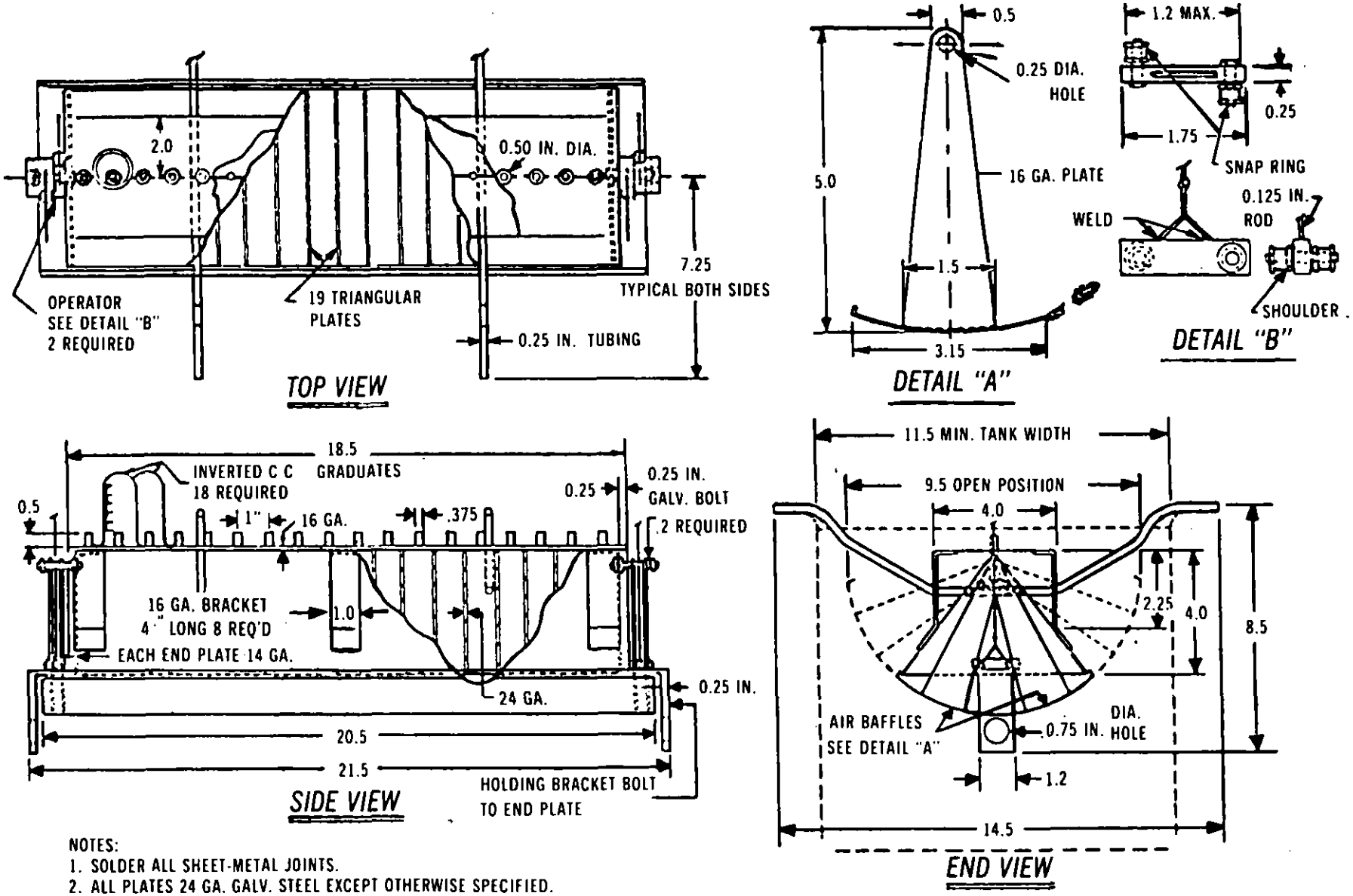

NOTES:
1. SOLDER ALL SHEET-METAL JOINTS.
2. ALL PLATES 24 GA. GALV. STEEL EXCEPT OTHERWISE SPECIFIED.

FIGURE 5. Apparatus for stress degradation tests.

Downloaded from http://www.everyspec.com

Downloaded from http://www.everyspec.com

4.6.11.10 The shield of the test apparatus shall then be opened and the pressure held for an additional five minute period. During this time effused gas shall be collected in the increment of the apparatus which includes the juncture of the hose to the fitting. If after the five minute period of pressurization, the rate of effusion of the hose assembly exceeds the values listed in table V, it shall be cause for rejection and considered failure to qualify.

TABLE V. Effusion rate.

Hose Assembly Size	cc/in./min.
-3/-4	8
-4	8
-5	8
-6	8
-8	4
-10	2
-12	2
-16Z	2
-20Z	2
-24Z	2

4.6.11.11 At the completion of tests specified in 4.6.11.2 through 4.6.11.10, the hose assemblies shall be filled with oil and placed in a cold chamber for eight hours while the temperature is maintained at 67°F ±2°F. After the eight-hour cold soak, the assemblies shall be subjected to a pressure equal to the operating pressure specified in table II. The pressure shall be held for a minimum of five minutes and then released. This shall be repeated for a total of 10 times with a minimum of five minutes between each pressure application and with the samples still in the 67°F ±2°F cold chamber. At the end of this time oil at a temperature of 450°F ±10°F shall be circulated through the samples. Within 15 seconds after introduction of the hot oil, the pressure shall be increased to the rated proof pressure specified in table II and held for minimum of two minutes. There shall be no evidence of leakage from the hose assembly.

4.6.12 Corrosion test. Two test samples of each size shall be mounted in a vertical position and immersed in a 2-1/2 percent solution of sodium chloride for five minutes. They shall then be air dried at 140°F for 25 minutes. This cycling shall be continued for 172 hours with the hose pressurized to normal operating pressure. Following the cycling, one sample shall be subjected to the room temperature burst pressure test and the other sample shall be subjected to the room temperature burst pressure test and the other sample shall be subjected to the high temperature burst pressure test. Any evidence of leakage or malfunction below the respective burst pressure specified in table II, or any pitting corrosion or stress corrosion, that might adversely affect the life of the fitting shall be cause for rejection.

4.6.13 Overtightening torque test. Test procedures and recommended torque values shall be in accordance with ARP-908.

Downloaded from http://www.everyspec.com

4.6.14 Elongation and contraction. Two test samples or each size shall be subjected to the elongation and contraction test. The hose shall not change in length by more than +0.20 or -0.30 inches in 10 inches of length, when subjected to the operating pressure shown in table II for not less than five minutes. With the hose held in a straight unpressurized condition, a 10-inch gage length shall be marked off on the hose and the hose then pressurized. After five minutes, and while still pressurized, the gage length shall be remeasured and the change in length calculated. The test fluid shall conform to MIL-H-5606 or MIL-H-83282.

4.6.15 Cubical expansion. The cubical expansion test shall be conducted in accordance with ASTM D 571 on 2 samples each of sizes -3/-4, -4, and -5 only. Cubical expansion values shall not be greater than those listed in table VI.

TABLE VI. Cubical expansion (max).

Size	Nominal Inside Dia. (Inch)	Volumetric Expansion (c.c/inch of Free Length)
-3/-4	0.188	0.028
-4	0.188	0.028
-5	0.250	0.040

4.6.16 Low temperature flexing. One test sample from the fuel resistance test, one from the stress degradation test, and one unaged sample shall be used for this test. The samples shall be filled with test fluid in accordance with TT-S-735, type III and placed in a cold chamber maintained at a temperature of -67° ±2°F for 24 hours. At the end of this time and while still at this temperature, the samples shall be bent to the extreme around a mandrel with a radius equal to the minimum bend radius specified in table II. The bend shall then be repeated for a total of five times allowing four seconds per cycle. Damage to the hose as a result of this test shall be cause for rejection.

4.6.17 Vacuum. The same samples used in 4.6.16 shall be emptied and placed in an oven, maintained at 45° ±10°F, with the assemblies in a minimum bend radius condition. A negative pressure as specified in table VII shall then be applied to the assemblies and maintained. At the end of four hours, the assemblies shall be removed from the oven with the negative pressure maintained. When the samples have cooled to room temperature, the pressure shall be released and the hose inspected for collapse or defects. One end of each sample shall then be cutoff within 1 inch of fitting and a ball of the diameter specified in table VII rolled the length of the hose. Reduction of the inside diameter to a value less than that of the ball specified, or damage to the hose as a results of bending a vacuum shall be cause for rejection.

Downloaded from http://www.everyspec.com

TABLE VII. Vacuum test.

Size	Nominal I.D. (inches)	Ball Diam. (inches)	Vacuum (inches-Hg)
-3/-4	0.188	0.125 - 0.132	28
-4	0.188	0.125 - 0.132	28
-5	0.250	0.187 - 0.193	28
-6	0.313	0.250 - 0.255	28
-8	0.406	0.332 - 0.337	28
-10	0.500	0.421 - 0.426	28
-12	0.625	0.531 - 0.538	20
-16Z	0.875	0.770 - 0.778	14
-20Z	1.125	0.996 - 1.004	10
-24Z	1.375	1.246 - 1.252	8

4.6.18 Pneumatic leakage test. The test assembly shall be tested at room temperature at a value equal to the nominal operating pressure for a minimum period of five minutes while submerged under water. The test fluid shall be dry compressed air or nitrogen. The test assemblies shall be prepared without use of oil during assembly and shall be solvent cleaned and air dried prior to testing.

4.6.19 Internal cleanliness test

4.6.19.1 Visually inspect hose assembly ends for installation of plug or cap at fitting. Both ends should firmly capped. An uncovered fitting nipple end is a failure.

4.6.19.2 Remove caps on plugs; place in light source at one end of the hose assembly and visually examine the hose assembly, without magnification, from the opposite end. Oil, grease, dirt, moisture or other foreign materials shall be cause for rejection.

5. PACKAGING

5.1 Preservation, packaging, packing, and marking. The hose shall be preserved, packaged, packed, and marked in accordance MIL-H-775. Preservation and packaging shall be level A or C and packing shall be levels A, B, or C as specified (see 6.2).

6. NOTES

6.1 Intended use. The hose assemblies covered by this specification are intended for use in high-temperature fuel, lubricating oil, water-alcohol, and hydraulic and pneumatic systems operating throughout a temperature range of -65° to +450°F. The specified temperature limit is 450°F for all except the hydraulic and pneumatic systems which are limited to 400°F. Operating pressures are listed in table II of this specification. Installations in which these limits are exceeded or in which the application is not covered specifically by this specification or subject to approval by the procuring activity. *For acquisition purposes, this is a critical application item.*

6.1.1 Fire resistance. Where fire proofing or fire resistance is a consideration.

Downloaded from http://www.everyspec.com

6.2 Ordering data. Procurement documents should specify the following:

a. Title, number, and date of this specification

b. Size and length of hose assemblies to be furnished

c. Type, size, or special features of end fittings desired (see 3.4)

d. Level of preservation and packaging, and packing required (see 5.1).

6.3 Qualification. With respect to products requiring qualification, awards will be made only for such products as have, prior to the time set for opening of bids, been tested and approved for inclusion in the applicable qualified products lists, whether or not such products have actually been so listed by that date. The attention of the contractors is called to this requirement, and manufacturers are urged to arrange to have the products that they propose to offer to the Federal Government tested for qualification in order that they may be eligible to be awarded contracts or orders for the products covered by this specification. The activity responsible for the qualified products list is Aeronautical Systems Division, ATTN: ENES, Wright-Patterson Air Force Base, Ohio 45433 and information pertaining to qualification of products may be obtained from that activity.

6.4 Data requirements. The acquisition documents for hose assemblies conforming to this specification shall incorporate a DD Form 1423, Contract Data Requirements List (CDRL) listing the data requirements identified below, developed as specified by the Data Item Description (DD Form 1664), and delivered in accordance with the approved CDRL incorporated into the contract. When the provisions of DAR 7-104.9(n)(2) are invoked and the DD Form 1423 is not used, the data specified below shall be delivered by the contractor in accordance with the contract or purchase order requirements. Deliverable data required by this specification is cited in the following paragraphs:

Paragraph No.	Data Requirements	Applicable DID No.
4.4.3	Acceptance Test Report	DI-T-3721A

Downloaded from http://www.everyspec.com

6.5 Changes from previous issues. Asterisks are not used in this revision to identify changes with respect to the previous issue due to the extensiveness of the changes.

Custodians:
Army - AV
Navy - AS
Air Force - 11

Review activities:
Army - AV, GL, ME
Navy - AS
Air Force - 69

User activities:
Army - MI, AR
Navy - SH

Preparing activity:
Air Force - 11

Project No. 4720-0577

U.S. GOVERNMENT PRINTING OFFICE: 1983 - 905-038/20000

Downloaded from http://www.everyspec.com

INSTRUCTIONS: In a continuing effort to make our standardization documents better, the DoD provides this form for use in submitting comments and suggestions for improvements. All users of military standardization documents are invited to provide suggestions. This form may be detached, folded along the lines indicated, taped along the loose edge *(DO NOT STAPLE)*, and mailed. In block 5, be as specific as possible about particular problem areas such as wording which required interpretation, was too rigid, restrictive, loose, ambiguous, or was incompatible, and give proposed wording changes which would alleviate the problems. Enter in block 6 any remarks not related to a specific paragraph of the document. If block 7 is filled out, an acknowledgement will be mailed to you within 30 days to let you know that your comments were received and are being considered.

NOTE: This form may not be used to request copies of documents, nor to request waivers, deviations, or clarification of specification requirements on current contracts. Comments submitted on this form do not constitute or imply authorization to waive any portion of the referenced document*(s)* or to amend contractual requirements.

(Fold along this line)

(Fold along this line)

DEPARTMENT OF THE AIR FORCE
ASD/ENES
Wright-Patterson AFB OH 45433-6503

NO POSTAGE NECESSARY IF MAILED IN THE UNITED STATES

OFFICIAL BUSINESS
PENALTY FOR PRIVATE USE $300

BUSINESS REPLY MAIL
FIRST CLASS PERMIT NO. 73236 WASHINGTON D. C.

POSTAGE WILL BE PAID BY THE DEPARTMENT OF THE AIR FORCE

ASD/ENES
Wright-Patterson AFB OH 45433-6503

Downloaded from http://www.everyspec.com

STANDARDIZATION DOCUMENT IMPROVEMENT PROPOSAL

(See Instructions – Reverse Side)

1. DOCUMENT NUMBER

2. DOCUMENT TITLE

3a. NAME OF SUBMITTING ORGANIZATION

b. ADDRESS *(Street, City, State, ZIP Code)*

4. TYPE OF ORGANIZATION *(Mark one)*

- ☐ VENDOR
- ☐ USER
- ☐ MANUFACTURER
- ☐ OTHER *(Specify)*: _____

5. PROBLEM AREAS

a. Paragraph Number and Wording:

b. Recommended Wording:

c. Reason/Rationale for Recommendation:

6. REMARKS

7a. NAME OF SUBMITTER *(Last, First, MI)* – Optional

b. WORK TELEPHONE NUMBER *(Include Area Code)* – Optional

c. MAILING ADDRESS *(Street, City, State, ZIP Code)* – Optional

8. DATE OF SUBMISSION *(YYMMDD)*

(TO DETACH THIS FORM, CUT ALONG THIS LINE.)

DD FORM 82 MAR 1426

PREVIOUS EDITION IS OBSOLETE.