Downloaded from http://www.everyspec.com

INCH POUND

MIL-H-24591B(SH)
28 February 1994
SUPERSEDING
MIL-H-24591A(SH)
19 August 1987
(See 6.9)

MILITARY SPECIFICATION

HOISTS, CHAIN, PNEUMATIC, LOW HEADROOM, TROLLEY TYPE

This specification is approved for use within the Naval Sea Systems Command, Department of the Navy, and is available for use by all Departments and Agencies of the Department of Defense.

1. SCOPE

1.1 Scope. This specification covers pneumatic, trolley type chain hoists with traverse drive, having extreme low headroom and zero load eccentricity. Hoists include a lifting unit, a traversing unit, and a pendant unit.

1.2 Classification. Hoists shall be of the following types or capacities as specified (see 6.2).

Type I - 2,000 pound rated load
Type II - 4,000 pound rated load
Type III - 6,000 pound rated load

2. APPLICABLE DOCUMENTS

2.1 Government documents.

2.1.1 Specifications and standards. The following specifications and standards form a part of this document to the extent specified herein. Unless otherwise specified, the issues of these documents shall be those listed in the issue of the Department of Defense Index of Specifications and Standards (DoDISS) and supplement thereto, cited in the solicitation (see 6.2).

Beneficial comments (recommendations, additions, deletions) and any pertinent data which may be of use in improving this document should be addressed to: Commander, Naval Sea Systems Command, SEA 03Q42, 2531 Jefferson Davis Hwy., Arlington, VA 22242-5160 by using the self-addressed Standardization Document Improvement Proposal (DD Form 1426) appearing at the end of this document or by letter.

AMSC N/A FSC 3950
DISTRIBUTION STATEMENT A Approved for public release; distribution is unlimited.

Downloaded from http://www.everyspec.com

SPECIFICATIONS

FEDERAL

TT-E-490	-	Enamel, Silicone Alkyd Copolymer, Semigloss (for Exterior and Interior Non-Residential Use).
UU-P-268	-	Paper, Kraft, Wrapping.
PPP-C-850	-	Cushioning Material, Polystyrene Expanded, Resilient (for Packaging Uses).
PPP-C-1120	-	Cushioning Material, Uncompressed Bound Fiber for Packaging.

MILITARY

MIL-S-901	-	Shock Tests, H.I. (High-Impact); Shipboard Machinery, Equipment and Systems, Requirements for.
MIL-E-917	-	Electric Power Equipment, Basic Requirements (Naval Shipboard Use).
MIL-M-3184	-	Machinery: Deck and Vehicle Mounted with Associated Equipment and Provisioned (Repair Parts) Items; Packaging of.
MIL-R-6130	-	Rubber, Cellular, Chemically Blown.
MIL-P-15024	-	Plates, Tags and Bands for Identification of Equipment.
MIL-P-15024/5	-	Plates, Identification.
MIL-L-17331	-	Lubricating Oil, Steam Turbine and Gear, Moderate Service.
MIL-R-20092	-	Rubber or Plastic Sheets and Assembled and Molded Shapes, Synthetic, Foam or Sponge, Open Cell.
MIL-A-21180	-	Aluminum-Alloy Castings, High Strength.
MIL-P-24441	-	Paint, Epoxy-Polyamide, General Specification for.
MIL-P-24441/1	-	Paint, Epoxy-Polyamide, Green Primer, Formula 150, Type I.
MIL-P-24441/2	-	Paint, Epoxy-Polyamide, Exterior Topcoat, Haze Gray, Formula 151, Type I.
DOD-P-24648	-	Primer Coating, Zinc Dust Pigmented For Exterior Steel Surfaces (Metric)
MIL-P-26514	-	Polyurethane Foam, Rigid or Flexible, for Packaging.

STANDARDS

MILITARY

MIL-STD-167-1	-	Mechanical Vibrations of Shipboard Equipment (Type I - Environmental and Type II - Internally Excited).
MIL-STD-721	-	Definitions of Terms for Reliability and Maintainability.
MIL-STD-740-1	-	Airborne Sound Measurements and Acceptance Criteria of Shipboard Equipment.

Downloaded from http://www.everyspec.com

(Unless otherwise indicated, copies of federal and military specifications, standards, and handbooks are available from the Standardization Documents Order Desk, BLDG. 4D, 700 Robbins Avenue, Philadelphia, PA 19111-5094.)

2.2 Non-Government publications. The following documents form a part of this document to the extent specified herein. Unless otherwise specified, the issues of the documents which are DoD adopted are those listed in the issue of the DoDISS cited in the solicitation. Unless otherwise specified, the issues of documents not listed in the DoDISS are the issues of the documents cited in the solicitation (see 6.2).

AMERICAN SOCIETY FOR TESTING AND MATERIALS (ASTM)

A 143 - Standard Practice for Safeguarding Against Embrittlement of Hot Dip Galvanized Structural Steel Products and Procedure for Detecting Embrittlement. (DoD adopted)
B 633 - Standard Specification for Electrodeposited Coatings of Zinc on Iron and Steel. (DoD adopted)
B 695 - Standard Specification for Coatings of Zinc Mechanically Deposited on Iron and Steel.

(Application for copies should be addressed to the American Society for Testing and Materials, 1916 Race Street, Philadelphia, PA 19103.)

STEEL STRUCTURES PAINTING COUNCIL (SSPC)

Surface Preparation Specification SP-10 - Near White Blast Cleaning.

(Application for copies should be addressed to the Steel Structure Painting Council, 4400 5th Avenue, Pittsburgh, PA 15213.)

OCCUPATIONAL SAFETY AND HEALTH ADMINISTRATION (OSHA)

OSHA 2206 - OSHA Safety and Health Standards (Part 1910, Title 29 of the Code of Federal Regulations).

(Application for copies should be addressed to the Superintendent of Documents, Government Printing Office, Washington, DC 20402.)

(Nongovernment standards and other publications are normally available from the organizations that prepare or distribute the documents. These documents also may be available in or through libraries or other informational services.)

2.3 Order of precedence. In the event of a conflict between the text of this specification and the references cited herein the text of this document takes precedence. Nothing in this document, however, supersedes applicable laws and regulations unless a specific exemption has been obtained.

Downloaded from http://www.everyspec.com

3. REQUIREMENTS

3.1 First article. When specified (see 6.2) , a sample shall be subjected to first article inspection (see 6.4) in accordance with 4.3.

3.2 Materials. Materials shall possess the properties necessary to withstand vibration, shock, and other conditions specified herein. Materials for use in exposed locations subject to salt water spray shall be free from all defects and imperfections that may affect serviceability or appearance of the hoists.

3.2.1 Metals. Lightweight, high strength alloys shall be used. Aluminum-alloy castings shall be in accordance with MIL-A-21180. Magnesium alloy (does not include steel or aluminum alloys which contain less than 0.5 percent magnesium), beryllium, cast iron, pressed steel and cadmium plating in any form shall not be used. Metals used in the construction of the hoists for exposed locations shall be, to the greatest extent possible, selected from the following:

(a) Steel alloys up to yield strength levels of 130 kilopounds per square inch (kpsi).

(b) Aluminum castings in accordance with MIL-A-21180.
(c) Corrosion resisting steel alloys 316 and 316L.
(d) Stainless steel alloy 17-4PH, heat treated to maximum yield strength of 130 KPSI.
(e) Nickel-copper alloys.
(f) Nickel-iron alloys.

Permission for the use of metals or structural materials other than those listed shall be granted by the contracting activity (see 6.7).

3.2.2 Recovered materials. Unless otherwise specified herein, all equipment, material, and articles incorporated in the products covered by this specification shall be new and may be fabricated using materials produced from recovered materials to the maximum extent practicable without jeopardizing the intended use. The term "recovered materials" means materials which have been collected or recovered from solid waste and reprocessed to become a source of raw materials, as opposed to virgin raw materials. None of the above shall be interpreted to mean that the use of used or rebuilt products is allowed under this specification unless otherwise specifically specified.

3.3 Safety.

3.3.1 Safety criteria and consideration. Equipment design shall consider, but not be limited to, the following (see 6.3):

(a) Avoiding or eliminating identified hazards by design selection or material selection.

Downloaded from http://www.everyspec.com

(b) Controlling and minimizing hazards to personnel, equipment and material which cannot be avoided or eliminated.
(c) Isolating hazardous substances, parts and operations from other activities, areas, personnel and incompatible materials.
(d) Incorporating fail-safe design features so that failures will not cause injury to personnel or damage to equipment.
(e) Locating equipment parts so that access to them by personnel during operation, maintenance, repair or adjustment shall not require exposure to hazards such as chemical burns, electrical shock, cutting edges, sharp points or toxic atmospheres.
(f) Providing warning and caution notes in operations, assembly, maintenance, and repair instructions; and distinctive warnings of hazards on the equipment.

3.4 Performance and characteristics.

3.4.1 Type I. Performance and characteristics for Type I hoist shall be as follows:

(a) Rated load - not less than 2,000 pounds.
(b) Lifting speed - not less than 25 feet per minute (ft/min).
(c) Lift range - not less than 8 feet, unless otherwise specified (see 6.2).
(d) Weight - not greater than 185 pounds, excluding chain and hook.
(e) Width - not greater than 12 inches to either side of trolley centerline.
(f) Length - 26 inches (not including optional cushion bumpers).
(g) Height - Distance from underside of track to lifting surface of retracted load hook, minimum practicable but not greater than 6.5 inches; in addition, other hoist projections excluding chain basket shall extend not greater than 15 inches below underside of the track. No part of hoist shall extend 4 inches above the bottom of the trolley track.
(h) Rated air gauge pressure - 90 pounds per square inch (psi).
(i) Air consumption - 90 to 100 standard cubic feet per minute (ft/min) at 90 psi.
(j) Trolley track size - 5- by 3.000-inch by 10 pounds per foot (lb/ft), 5- by 3.284-inch by 14.75 lb/ft, 6- by 3.330-inch by 12.5 lb/ft and 6- by 3.565-inch by 17.25 lb/ft "I" beam.
(k) Trolley track radius - Trolley hoist shall negotiate "S" curves of 26-inch radius.
(l) Traversing speed - not greater than 40 ft/min with rated load and air pressure on the level and 10 ft/min on 10-degree incline.

3.4.2 Type II. Performance and characteristics for Type II hoist shall be as follows:

(a) Rated load - 4,000 pounds.
(b) Lifting speed - not less than 16 ft/min.
(c) Lift range - not less than 8 feet, unless otherwise specified (see 6.2).
(d) Weight - not greater than 185 pounds for hoist unit, excluding chain and hook. Cumulative weight of hoist, trolley and hoist tractor units may

Downloaded from http://www.everyspec.com

total not greater than 225 pounds with 8 feet of lift chain and hook, if readily disconnected.

(e) Width - not greater than 12 inches to either side of trolley centerline.
(f) Length - 26 inches (not including cushion bumpers).
(g) Height - Distance from underside of track to lifting surface of retracted load hook, minimum practicable but not greater than 6.5 inches; in addition, other hoist projections excluding chain basket shall extend greater than 15 inches below underside of the track. No part of hoist shall extend 4 inches above the bottom of the trolley track.
(h) Rated air gauge pressure - 90 psi.
(i) Air consumption - 90 to 100 ft^3/min at 90 psi.
(j) Trolley track size - 5- by 3.000-inch by 10 lb/ft, 5- by 3.284-inch by 14.75 lb/ft, 6- by 3.330-inch by 12.5 lb/ft, 6- by 3.565-inch by 17.25 lb/ft and 8- by 4.000-inch by 18.4 lb/ft "I" beam.
(k) Trolley track radius - Trolley hoist shall negotiate "S" curves of 26-inch radius.
(l) Traversing speed - not less than 40 ft/min with rated load and air pressure on the level and 10 ft/min on 10-degree incline.

3.4.3 Type III. Performance and characteristics for Type III hoist shall be as follows:

(a) Rated load - not less than 6,000 pounds.
(b) Lifting speed - not less than 10 ft/min.
(c) Lift range - not less than 8 feet unless otherwise specified (see 6.2).
(d) Weight - not greater than 285 pounds, excluding chain and hook.
(e) Width - not greater than 12.5 inches to either side of trolley centerline.
(f) Length - 31 inches (including optional cushion bumpers).
(g) Height - Distance from underside of track to lifting surface of retracted load hook, minimum practicable, but not greater than 9.5 inches; in addition, other hoist projections excluding chain basket shall extend not greater than 15 inches below under side of the track. No part of hoist shall extend 4 inches above the bottom of the trolley track.
(h) Rated air gauge pressure - 90 psi.
(i) Air consumption - 90 to 100 standard ft/min at 90 psi.
(j) Trolley track size - 8- by 4.000-inch by 18.4 lb/ft "I" beam, adaptable to 6- by 3.330-inch by 12.5 lb/ft and 6- by 3.565-inch by 17.25 lb/ft "I" beam.
(k) Trolley track radius - Trolley hoist shall negotiate "S" curves of 36-inch radius.
(l) Traversing speed - not less than 35 ft/min with rated load and air pressure on the level and 10 ft/min on 10-degree incline.

3.5 Incline consideration. Hoisting and traversing brakes shall be provided which shall hold the rated load on an incline of plus or minus 15 degrees with the horizontal in any direction. The hoist shall operate on a plus or minus 10-degree incline with the horizontal in any direction, with rated load, at reduced speed,

Downloaded from http://www.everyspec.com

through the full lift range.

3.6 Construction. Hoist shall be in accordance with the requirements specified herein. Components shall have adequate strength to operate satisfactorily under the requirements specified. Parts shall be as light and compact as practicable, yet consistent with the required strength and stiffness. Rotating shafts shall be supported in antifriction, lubricated or self-lubricated bushings or bearings. Shaft bushings and bearings shall be enclosed against entry of dirt, dust or foreign material. Rotating and sliding surfaces shall be lubricated. Hoist shall operate at temperatures of 0 through 130 degrees Fahrenheit (F) for not less than 3,000 cycles without a failure. Hoist construction shall permit chain replacement by the use of simple hand tools. Gears shall be enclosed against dirt, dust and water spray in a casing which permits ready access for inspection and cleaning. Positive means shall be provided to prevent any component working loose. Hoist shall be complete in all respects including operating controls and other equipment that may be necessary for operation. For hoists requiring repair parts, all wear parts shall be readily accessible for replacement. No part of the hoist shall protrude below the motor except the pendant controls, chain bag, chain, load hook or shackle when applicable. Motor shall be bolted to the frame. Hoists to be used for nuclear lifting shall have a safety factor of 5 or greater for all hoist lifting components. Hoists to be used for nuclear lifting shall be ordered as such (see 6.2).

3.7 Stress. Hoist mechanical components shall use the loading factors specified in 3.7.1. Combined stresses of mechanical components of the hoist, hoist tractor and trolley shall not exceed 35 percent of the yield strength of the material used, when operating with rated load under 10-degree incline condition (see 3.5). Maximum combined stresses in structural and mechanical components under 15-degree incline condition (see 3.5) shall be not greater than 70 percent of the yield strength of the material used when the hoist or hoist tractor is subjected to maximum torque or braking conditions.

3.7.1 Loading factor. Hoist components shall incorporate the following loading factors:

(a) Dynamic loading based on inertial forces - 1.5 times rated load.
(b) Static loading based on inertial forces - 2.0 times rated load.

3.7.2 High impact shock. When specified (see 6.2), unloaded hoists, when stowed (not operating) on the rail, shall withstand high impact shock in accordance with grade A of MIL-S-901, without permanent deformation or degradation of any operating functions. It will be permissible for trolley hoist to drift along track under shock conditions providing no damage to trolley hoist or brake results and brake holds hoist to rail after shock. Drift shall be not greater than 1 inch.

3.7.3 Mechanical vibration. An unloaded hoist shall conform to the vibration test requirements of MIL-STD-167-1, type I (see 4.6.2).

3.8 Frame or housing. The frame or housing shall contain the hoist mechanisms including gears, sprockets, load chain stowage, spring reel for chain drum or magazine, hoist and trolley brakes, protection of pneumatic controls and

Downloaded from http://www.everyspec.com

piping, air motors and other operating components. Hoist or frame side tilt shall be kept to a minimum when operating on the trolley rail. In case of any inclination of rail or effects of ship motion, no part of the hoist shall project above the top flange of the trolley rail. Means shall be provided to afford protection from damage due to bumping of two or more adjacent hoists or hoists on the same track. This protection shall be provided through use of bumpers or inherent frame or housing features.

3.9 Hoist drives. Hoist lift and hoist traverse units shall be driven by reversible air motors of enclosed construction type, constructed to operate with air gauge pressure up to 100 psi (dynamic) measured at the motor and 125 lb/in^2 (static) measured at the source. Motor brakes shall be furnished (see 3.16) .

3.9.1 Hoist lift drive. The hoist lift drive motor shall be coupled through a speed reducer or drive gear to the load chain sprocket.

3.9.2 Hoist traverse unit drive. The hoist traverse drive unit shall have positive traction. The motor shall be coupled through a speed reducer to a chain sprocket for use on a 1-inch pitch single strand No. 80-1-RC-A standard roller chain welded to the bottom of the trolley track as shown on figure 1, or as specified (see 6.2).

3.10 Load chain. Hoist shall be double purchased. Load chain shall be carbon or alloy steel and shall be corrosion-resistant finished as specified in 3.10.1. Load chain shall be of sufficient hardness and strength to with stand the applicable tests specified in 4.6.3. Load chain shall be of the link chain type. Chain links shall be electric or forge welded. Each link shall be of uniform size and shape, free from scale and lamination at the welds, and shall seat properly in the hoist chain sheave pockets. The chain shall be free from any tendency to snarl. The ends of the load chain shall be securely attached to the hoist or provided with a means to prevent end of chain passing through hoist and shall be of a configuration which will permit ready removal of the chain. Load chain shall provide a safety factor of not less than five. This factor of safety shall be the ratio of chain breaking strength to the rated load applied to each purchase or 1000 pounds for type I hoist, 2000 pounds for type II hoist and 3000 pounds for type III hoist. A stripper shall be provided to free chain from sheave pockets on both sides of sheave.

3.10.1 Load chain finish. Link load chain shall be protected to resist corrosion by electrodeposited zinc. Zinc coating shall conform to ASTM B 633, type II, class Fe/Zn 13 or ASTM B 695, type I, class 25, coating requirements. Processing shall be such that there is no impairment in free movement of any chain link after plating. The safeguarding against and procedure for detecting embrittlement of zinc coating shall be in accordance with ASTM A 143.

3.10.2 Load chain stowage. Hoist construction shall include means for stowing the full length of load chain in chain reels, bags or baskets (see 6.2) when the hook is in the "up" position. The chain reels or baskets shall provide for stowage of chain for 8 feet of lift. The bags or baskets shall be used for stowage of chain for lifts greater than 8 feet. The chain reels shall maintain a relatively constant tension force to prevent chain slack between the load sprocket and the chain stowage. Construction of load sprocket and load chain stowage shall

Downloaded from http://www.everyspec.com

provide a constant chain feed without binding or jamming in the chain guide, stowage or hoist frame.

3.10.3 Load chain wheel, sprocket, and shaft. Load chain wheels or sprockets shall be provided with pockets, accurately shaped to fit the links of the load chain. The load shaft shall be integral with or rigidly connected to the load chain wheel. Welding of the wheel to the shaft will not be permitted.

3.10.4 Chain guides. Chain guides which enclose the chain as necessary to ensure proper load sprocket action shall be provided. The function of the chain guides shall be to guide the load chain over the load sprocket at a uniform angle to prevent fouling and jamming of the load chain.

3.11 Hoist lift limit stops. Upper and lower lift limit stops shall be provided.

3.12 Load attachments.

3.12.1 Load hooks. The hoist load hooks shall be of drop forged heat-treated steel that shall withstand the test loads specified in Section 4. Hoist load hooks shall be as shown on figure 4, as specified (see 6.2), and shall be fitted with a swivel and a safety device except type I, fixed eye, regular hook. The safety device shall consist of a spring latch or swivel type closure to bridge the hook throat opening and shall be an integral part of the hoist hook. Spring latch type closures shall be hinged at the neck of the hook with the other end resting inside the tip of the hook. The swivel shall permit 360-degree rotation of the hoist load hook with full load without twisting the attached wire rope, link or roller chain. Hoist load hook throat openings shall be in accordance with the dimensions shown in table I. The hook throat safety device of the suspension or upper hook shall withstand a pull against the hook throat safety device as speci-fied (see 4.6.11). Hooks shall be clearly marked with manufacturer identification and allowable load or allowable load designator.

3.12.1.1 Load hook finish. Unless otherwise specified (see 6.2), hooks shall be zinc plated. Zinc plating shall be in accordance with ASTM B 633, Type II, Class Fe/Zn 13. The safeguarding against and procedure for detecting embrit-tlement of zinc coating shall be in accordance with ASTM A 143. The hook throat safety device shall be constructed of non-corrosive material or treated for corrosion resistance.

TABLE I. Hook throat openings.

Hoist rated load (pounds)	Hook throat opening (inches) (minimum)

Downloaded from http://www.everyspec.com

1,000	0.750
2,000	0.906
3,000	1.0
4,000	1.125
5,000	1.125
6,000	1.5
7,500	1.375
10,000	1.625
11,000	2.0
13,000	2.063
15,000	2.063
17,000	2.063
20,000	2.25
25,000	2.25
30,000	2.75
40,000	3.0

3.12.2 Shackle. When required (see 6.2), a shackle with self-locking pin shall be substituted for the load hook to conserve head room. Shackle opening shall be 1-1/16 inches wide by 1 inch clear opening above upper edge of pin. Shackle shall be provided with thrust bearing and be free to rotate 360 degrees without binding under full load conditions.

3.13 Range of load hook. The hoist shall lift rated loads from any point within a 19-inch radius from an imaginary perpendicular under the chain sprockets to a horizontal plane 7 feet below the trolley track. The hoist shall lift rated loads at this offset range without binding or jamming of the load chain in the sprocket guide.

3.14 Bearings. Where practicable, rotating parts shall be mounted on antifriction bearings to suit the intended use, and shall have a service life of not less than 10,000 hours. Bearings shall be selected by the hoist manufacturer with load ratings, including applicable safety factors, greater than the maximum bearing loads under extreme operating conditions specified herein. Exposed bearings shall be sealed or shielded. Bearings shall be of the permanently lubricated type, where practicable, or provided with fittings to add lubrication when required. When antifriction bearings are not used, bearings shall meet all requirements of antifriction bearings.

3.15 Trolley. The trolley hoist shall have not less than four wheels. Wheels shall have a lateral positioning feature enabling the trolley to operate, along a straight track, with a clearance of not less than 3/8 inch between the wheels and the web of the largest "I" beam rail (see figures 2 and 3). Wheels shall be of ferrous material. The trolley shall operate on 8- by 4.000-inch by 18.4 lb/ft, 6- by 3.330-inch by 12.5 lb/ft, 6- by 3.565-inch by 17.25 lb/ft, 5- by 3.284-inch by 14.75 lb/ft and 5- by 3.000-inch by 10 lb/ft "I" beam as specified in 3.4.1 through 3.4.3. Flange widths are nominal and are subject to plus or minus 1/8 inch mill tolerance. Zero load eccentricity of the hoist shall be maintained when the wheels are positioned for each size rail.

3.16 Brakes. The lifting and traversing power units shall be equipped with

Downloaded from http://www.everyspec.com

brakes coupled to the respective drive transmission. The brakes shall be spring loaded automatic operating type constructed to actuate upon reduction of air pressure below the safe motor operating pressure. The brakes shall be equipped with a manual release for emergency operation. Manual release mechanisms shall be arranged so they can be operated without endangering the operator. Brakes shall hold the test loads without slipping from a stopped position and rated load on the hoist as specified in 3.5. Provisions shall be made to facilitate adjusting the brakes. If more than one hoist power unit is used, a load brake is required on each power unit, and provision shall be made to assure that brakes will operate simultaneously.

3.17 Pendant unit. Controls shall be on a thumb operated manifold suspended on a pendant of sufficient length to allow easy operation of the hoist for the required lift range (see 6.2), and shall support a 200-pound load. Controls shall permit easy selection of speeds from minimum to maximum speeds when handling rated load and also to meter air supply to motors, for vernier positioning of load vertically and horizontally as required by 4.6.3.3 in very limited space. "UP" and "DOWN" controls shall be labeled as such. Traversing controls shall be color-coded to indicate direction of travel, and corresponding colored arrows shall be affixed to the hoist and shall be visible from operating positions on each side of the hoist.

3.17.1 Shuttle valve. Shuttle valves or similar devices shall be provided. In the event the hand crank for manual operation (see 3.18) is removed from the hoist or when nonoverhauling manual transmission (see 3.18.1) is engaged, the pendant unit (see 3.17) shall not release brake pressure on hoist or tractor motor. The motor shall resist back drive by rated load at brake release pressure. The brake release to drive time-lag shall not result in any perceptible slip page of lift or traverse motion.

3.17.2 Dump valve. Long pendants shall be provided with dump valves or similar devices to meet the vernier positioning requirements of 4.6.3.3.

3.18 Manual operation. Means shall be provided for manual lowering and traversing operation in the event of loss of air supply. To provide hand clearance for operator safety, the length and location of a handcrank shall provide for a minimum of 1 inch operational hand clearance measured vertically between the handcrank and the top of the smallest specified I-beam trolley track, track foundation or hull structure. Force required on a crank to lower rated load shall be not greater than 40 pounds. The load shall not lower unless the brakes are intentionally and manually released (see 3.16) or the handcrank is manually cranked . Means shall be provided so that power operation shall not be possible when the hand crank is removed from its stowage position .

3.18.1 Nonoverhauling manual transmission. When specified (see 6.2), worm gear type non-overhauling transmissions for emergency manual lifting, lowering and traversing of the load shall be provided. When engaged, the load shall not overhaul the transmission when the brake is released and the handcrank is free from a restraining force. The manual brake release, hoisting, and traversing mechanisms shall be arranged so they can be operated by the operator standing on the deck without endangering the operator. Force required on a handcrank to raise, lower or traverse a load shall be not greater than 40 pounds.

Downloaded from http://www.everyspec.com

3.19 Airborne noise. The hoist airborne noise level shall be not greater than the octave band sound pressure levels specified in 4.6.4.

3.20 Air supply inlet. Air supply line shall connect to hoist (not to pendant control).

3.21 Repair and maintenance. Means shall be provided for adjustment, service and replacement of all operating components of the trolley hoist. Parts and assemblies subject to possible periodic maintenance or overhaul shall be maintainable as specified in 3.27.2. Adjustment means for brake setting and air control valves shall be easily available. There shall be no interference to the servicing or draining of oils and lubricants, if applicable, to or from any assembly or component by frame members or other obstructions. Grease seals shall be provided to prevent leakage of oil and grease.

3.22 Interchangeability. In no case shall parts be physically interchangeable or reversible unless such parts are also interchangeable or reversible with regard to function, performance and strength.

3.23 Service life. Moving parts, except bearings, shall have a life in rated service of not less than 10,000 hours and shall operate for not less than 1,200 hours without adjustment or replacement of parts. Periodic adjustment of brakes due to lining or friction disc wear is excepted.

Downloaded from http://www.everyspec.com

3.24 Identification and instruction plates.

3.24.1 Identification plates. Identification plates shall be provided in a prominent position on the side plate of hoist and control unit. Identification plates shall be corrosion-resisting steel or aluminum alloy in accordance with MIL-P-15024 and MIL-P-15024/5, types A, B, C, or H.

3.24.2 Instruction and caution plates. Operating instructions on the control pendant shall be clearly inscribed. Instruction and caution plates shall be of corrosion-resisting steel or aluminum alloy in accordance with MIL-P-15024 and MIL-P-15024/5, types A, B, C, or H.

3.25 Lubrication. Means shall be provided for lubrication of all moving parts of the hoist. Lubrication fittings shall be immediately accessible, except for removal of housing covers for internal lubrication points. Where practicable, points requiring lubrication shall be life lubricated. Bearing lubrication and protection shall conform to 3.14. Grease and oil lubrication requirements shall be in accordance with MIL-L-17331, respectively. Other lubricants are acceptable if included in the Navy stock system and free of ozone depleting chemicals (ODC).

3.26 Painting. When specified (see 6.2), exposed surfaces, except hooks, chains and other wear surfaces, shall be cleaned, pretreated, and finish coated in accordance with Method I as specified in 3.26.1. Method II (see 3.26.2) may be used if Method I is not specified.

3.26.1 Method I. Exposed surfaces, except hooks, chains, and other wear surfaces, shall be painted as specified herein. Before assembly, surfaces requiring painting shall be cleaned in accordance with SSPC SP-10. Steel surfaces, except for corrosion resisting steel, shall be coated with an inorganic zinc primer conforming to DOD-P-24648, applied at 3 to 5 mils dry film thickness (DFT). Prior to overcoating, residual deposits shall be removed by the manufacturer's recommended cleaning procedure. A coat of formula 150 which has been thinned with 1 pint of thinner per gallon, shall be applied, in accordance with MIL-P-24441 and MIL-P-24441/1, at a wet film thickness of 3 mils. This shall be followed by a full coat of formula 151, in accordance with MIL-P-24441 and MIL-P-24441/2, applied at 2 to 4 mils DFT, and two coats of silicone alkyd enamel, in accordance with TT-E-490 (haze gray), applied at 1 to 2 mils DFT per coat. The first coat of enamel shall be applied when the formula 151 is in the tack stage. Other metals that are not inherently corrosion resistant, in accordance with MIL-E-917, shall be processed (treated, plated, or painted) in accordance with MIL-E-917 to provide corrosion resistance.

3.26.2 Method II. Method II surface preparation and finish shall be contractor's standard commercial procedures. Paints and coatings shall be lead and chromate free.

3.27 Availability, reliability and maintainability. The minimum acceptable inherent availability (Ai) of the hoist shall be 0.90. This requirement establishes threshold values for reliability, maintainability and supportability of the hoist. Reliability and maintainability terms shall be in accordance with MIL-STD-721.

Downloaded from http://www.everyspec.com

3.27.1 Reliability. The hoist shall operate for an average period of 3,000 continuous cycles without failure. This value of 3,000 mean cycles between failure (MCBF) is equivalent to 90 days of normal ships operation without hoist failure (see 6.3).

3.27.2 Maintainability. Routine corrective maintenance at the organizational level shall be accomplished by replacing complete assemblies and subassemblies. Mean time to repair (MTTR) for the hoist shall be 4 hours. Not less than 95 percent of all corrective maintenance actions shall require not more than 10 hours to complete (see 6.3).

3.28 Weight. Weight of hoist shall be kept to a minimum. At delivery, the net weight and also the operating weight with fluids, where applicable, shall be indicated.

3.29 Workmanship. The hoist shall withstand any operation specified herein without permanent deformation, breakage, malfunction or component interference caused by improper workmanship. Parts of the hoist, before and after painting, shall be clean and free of sand, rust, dirt, fins, pits, sprues, scales and other harmful extraneous material. Edges and surfaces exposed to operating and maintenance personnel shall be smooth and rounded so that a hazardous surface does not exist. Bolted connections shall use standard bolts and nuts, self-locking nuts are acceptable. Threads shall have full thread engagement.

4. QUALITY ASSURANCE PROVISIONS

4.1 Responsibility for inspection. Unless otherwise specified in the contract or purchase order, the contractor is responsible for the performance of all inspection requirements (examinations and tests) as specified herein. Except as otherwise specified in the contract or purchase order, the contractor may use his own or any other facilities suitable for the performance of the inspection requirements specified herein, unless disapproved by the Government. The Government reserves the right to perform any of the inspections set forth in this specification where such inspections are deemed necessary to ensure supplies and services conform to prescribed requirements.

4.1.1 Responsibility for compliance. All items must meet all requirements of sections 3 and 5. The inspection set forth in this specification shall become a part of the contractor's overall inspection system or quality program. The absence of any inspection requirements in the specification shall not relieve the contractor of the responsibility of ensuring that all products or supplies submitted to the Government for acceptance comply with all requirements of the contract. Sampling inspection, as part of manufacturing operations, is an acceptable practice to ascertain conformance to requirements, however, this does not authorize submission of known defective material, either indicated or actual, nor does it commit the Government to accept defective material.

4.2 Classification of inspections. The inspection requirements specified herein are classified as follows:

(a) First article inspection (see 4.3).

Downloaded from http://www.everyspec.com

(b) Quality conformance inspection (see 4.4).

4.3 First article inspection. First article inspection shall consist of the examination and tests specified in 4.5 and 4.6. One first article sample successfully examined and tested for acceptability of operating characteristics as specified in 4.5 and 4.6 shall serve as a manufacturing standard and be used as a guide in the inspection of production hoists produced under the contract. If required (see 6.2), one other first article model shall be tested in accordance with MIL-S-901 (see 3.7.2).

4.4 Quality conformance inspection. Quality conformance inspection shall be performed on samples selected in accordance with 4.4.2 and 4.4.3. This inspection shall include the examination of 4.5 and the tests of 4.6.

4.4.1 Inspection lot. For the purpose of quality conformance inspection and test sampling, a lot is defined as all the hoists of the same size, type, and class, produced in one facility, using the same production processes and materials, and being offered for delivery at one time.

4.4.2 Sampling for visual examination. As a minimum, the contractor shall randomly select a sample quantity from each lot of completed hoists in accordance with table II and examine them in accordance with paragraph 4.5 for the defects listed in table IV. If one or more defects are found in any sample, the entire lot represented by the sample shall be rejected. If a lot is rejected, the contractor has the option of screening 100% of the lot for the defective characteristic(s) or providing a new lot which shall be examined in accordance with the sampling plan contained herein. The contractor shall maintain for a period of three years after contract completion all records of inspections, tests, and any resulting rejections.

TABLE II. Sampling for visual examination.

Lot size	Sample size Major defects	Sample size Minor defects
2 to 25	5	3
25 to 50	5	5
51 to 90	7	6
91 to 150	11	7
151 to 280	13	10
281 to 500	16	11
501 to 1200	19	15
1201 to 3200	23	18

4.4.3 Sampling for tests. As a minimum, the contractor shall randomly select a sample quantity from each lot of completed hoists in accordance with table III and subject them to the tests specified in 4.6. If one or more defects are found in any sample, the entire lot represented by the sample shall be

Downloaded from http://www.everyspec.com

rejected. If a lot is rejected, the contractor has the option of screening 100% of the lot for the defective characteristic(s) or providing a new lot which shall be tested in accordance with the sampling plan contained herein. The contractor shall maintain for a period of three years after contract completion all records of inspections, tests, and any resulting rejections.

TABLE III. Sampling for tests.

Lot size	Sample size
2 to 50	5
51 to 90	7
91 to 150	11
151 to 280	13
281 to 500	16
501 to 1200	19
1201 to 3200	23

4.5 Visual examination. Sample hoists shall be visually examined in accordance with table IV.

Downloaded from http://www.everyspec.com

TABLE IV. Classification of visual defects.

Category	Defect
Major	
101	Materials not as specified (see 3.2).
102	Hoist clearance, underside of track to inside of load hook, not as specified (see 3.4).
103	Hoist construction not as specified (see 3.6).
104	Gear casing does not protect against dirt, dust and water spray or permit ready access (see 3.6).
105	Chain links not uniform size (see 3.10).
106	Hoist lift range not as specified (see 3.4.1, 3.4.2 and 3.4.3).
107	Frame or housing not as specified (see 3.8).
108	Hoist drives not as specified (see 3.9).
109	Load chain wheel, sprocket and shaft not as specified (see 3.10.3).
110	Load chain not securely attached to hoist or not easily removed as specified (see 3.10).
111	Load chain reel or basket does not store full length of chain (see 3.10.2).
112	Chain reel does not maintain tension on chain as specified (see 3.10.2).
113	Hoist hooks not equipped with safety guard, or safety guard not as specified (see 3.12.1).
114	Exposed bearings not sealed or shielded (see 3.14).
115	Pendant unit not marked or supported as specified (see 3.17).
116	Handcrank clearance not as specified (see 3.18).
117	Hoist workmanship not as specified (see 3.29).
118	Hoist components damaged or missing.
Minor	
201	Hoist weight not as specified (see 3.4).
202	Hoist length and width dimensions not as specified (see 3.4).
203	Load chain finish not as specified (see 3.10.1).
204	Chain guides do not completely enclose the chain as specified (see 3.10.4).
205	Shackle not present, if specified (see 3.12.2).
206	Trolley wheels mounting arrangement not as specified (see 3.15).
207	Air supply line not connected to hoist as specified (see 3.20).
208	Hoist identification plate missing or inadequately attached (see 3.24.1).
209	Instruction and caution plates not as specified (see 3.24.2).
210	Lubrication fittings missing or damaged (see 3.25).
211	Lubrication of moving parts inadequate (see 3.25).
212	Paint coating not as specified (see 3.26).

Downloaded from http://www.everyspec.com

4.6 Tests.

4.6.1 High impact shock tests. If specified (see 6.2), high impact shock tests shall be conducted in accordance with MIL-S-901, grade A, and 3.7.2. Testing shall be conducted on one complete unloaded hoist. Shock qualification shall be certified on the applicable hoist drawing by note. The note shall be similar to: "This hoist has been approved for Grade A shock in the unloaded condition in accordance with MIL-S-901 by --- (letter identification) --- dated (letter date). Any change to this drawing or lower tier drawing requires review and approval to maintain shock certification." Shock test requirements may be fulfilled if an identical hoist conforming to the requirements of this specification has been successfully shock tested in accordance with 3.7.2 (see 6.3).

4.6.2 Mechanical vibration. Hoist shall be tested in accordance with MIL-STD-167-1, type I. (see 6.3).

4.6.3 Operating and load tests. Tests specified in 4.6.3.1 through 4.6.3.8 shall be conducted, during which the hoists shall operate smoothly without jerks, jars or excessive vibration. In no case shall a load hook slip during operation or from a stopped position.

4.6.3.1 Static overload test. With the hoist mounted on a section of rail, a test load of two times the rated load shall be suspended from the load hook for a period of 10 minutes. There shall be no permanent deformation of any portion of the hoist frame, load support or evidence of chain failure. The hoist shall not be deformed or otherwise affected in any way causing degradation of any operating function as a result of this test. At the end of the test period, the load shall be slowly swiveled 360 degrees not less than twice in each direction, alternately, without any binding or malfunction.

4.6.3.2 Dynamic overload test. With the hoist mounted on a section of rail, a test load of 1.5 times the rated load shall be lifted and lowered through the full hoisting range not less than four times in each direction with the hoist alternately tilted on a 10-degree incline to either side of the rail at maximum speed or highest speed capable (if less than maximum rated speed). The load shall be stopped twice during each lowering cycle, once at mid-point and once near the lower limit. There shall be no binding of the drive or jamming of the load chain in the guides, and no degradation of any operating function specified herein, except that maximum speed requirements shall not apply.

4.6.3.3 Hoisting controls sensitivity test. At maximum rated load, the load hook shall be moved vertically to within 0.125 inch of a desired position. From this position, the load hook shall be moved approximately 0.50 inch up and stopped. The load hook shall be returned to within 0.125 inch of the original desired position. The load hook shall then be moved approximately 0.50 inch down, stopped, and then returned to within 0.125 inch of the original position. The load hook shall then be moved horizontally to within 0.25 inch of a desired position. From this position, the load hook shall be traversed approximately 1 inch and stopped. The load hook shall then be returned to within 0.25 inch of the desired position. The load hook shall then be traversed approximately 1 inch in the opposite direction, stopped, and then returned to within 0.25 inch of the original

Downloaded from http://www.everyspec.com

position. Repeat the above not less than three times to demonstrate repetitive locating capability within these limits.

4.6.3.4 Traversing brake test. Traversing brakes shall be tested by subjecting the stopped hoist to a 1,560-pound pull which shall be exerted in each direction parallel to the trolley rail. Brakes shall keep the loaded hoist stationary on straight rails with the load applied in each direction alternately. The hoist shall then be traversed in both directions on straight sections of rail with rated load suspended from the hook. During this traversing, the hoist shall safely be stopped from maximum speed not less than five times, with no evidence of sliding. Satisfactory operation of the brakes shall be determined for either 5-inch, 6-inch or 8-inch "I" beam rails. Hoist shall traverse at rated speed with rated load suspended from the hook.

4.6.3.5 Inclined hoist test. The load hook carrying rated load shall be raised and lowered with the hoist alternately on plus or minus 10 degrees incline parallel to the rail and with the hoist tilted 10 degrees to either side of the rail. There shall be no traverse movement along the rail, no binding of the drive or jamming of the load chain in the guides and no degradation of any operating function specified herein. After this test, the hoist shall be operated on a horizontal track without evidence of binding or inability to perform the required functions. With the hoist mounted on a 15-degree incline rail, a rated load shall be suspended from the load hook for a period of 2 minutes without any hoist movement along the rail. Hoist shall be traversed at reduced speed up 10-degree incline with rated load suspended from the load hook through the full lift range.

4.6.3.6 Load hook range test. The hoist shall lift a rated load, placed in such a geometric configuration that the angle of load chain to load chain sprocket would be the same angle resulting from picking up a load in a radius of 19 inches of a horizontal plane at 7 feet below the trolley track. The load shall be lifted not less than four times with the load being placed, for each lift, in progressive 90-degree positions of a projected plane described above. In each case, the hoist shall successfully pick up the load, without jamming, binding or fouling of the load chain or any component of the drive assembly. Upper and lower limit stops shall be verified.

4.6.3.7 Manual operation test. With the loaded hoist set up for manual operation, the hoist shall be manually traversed three feet in both forward and reverse directions using the handcrank. Then, with handcrank disengaged and removed from the hoist, the load shall be lowered to the deck by manually releasing the load brake (see 3.16), then using the handcrank the load shall be manually lowered by an additional amount as necessary to release the chain tension thus freeing the load from the hook. During manual operation, it shall be demonstrated that the operator can safely control the load speed at all times. It shall also be demonstrated that operating personnel will not be endangered if the air supply is suddenly restored during manual operation. Where non-overhauling manual transmission is specified (see 3.18.1 and 6.2), it shall be demonstrated that the load hook can be raised and lowered through its entire range using the handcrank and the load will not overhaul the drive transmission when the handcrank is free from a restraining force, nor will the operator be endangered if the air supply is suddenly restored.

Downloaded from http://www.everyspec.com

4.6.3.8 Cycling tests. With the hoist installed on a suitable rail, the hoist shall be operated through 50 continuous operating cycles. The rail shall include a section of track of radius specified in 3.4.1, 3.4.2 and 3.4.3, as applicable. During the test, the hoist shall lift and traverse maximum rated load. Load shall be accelerated to the maximum rated speed specified in 3.4.1, 3.4.2 and 3.4.3. A cycle shall consist of raising the load for a 10-second period, stopping, and traversing for a 10-second period; stopping and retraversing for a 10-second period; stopping and finally lowering for a 10-second period to return to the original starting point, followed by a 40-second rest period, after which the test shall be repeated. During each 10-second operating period, the load shall be smoothly accelerated from the stopped position to maximum speed and back to the stopped position.

4.6.4 Airborne noise test. Airborne noise tests shall be in accordance with MIL-STD-740-1. Airborne noise level shall be not greater than the maximum level of grade D in accordance with MIL-STD-740-1.

4.6.5 Life test. If specified (see 6.2), one first article sample hoist (see 4.3), shall be run through 500 consecutive cycles (see 4.6.3.8), free of malfunction. Operation time, cycle counts, description of preventive maintenance action and description of malfunctions and resulting repair actions shall be logged. (see 6.3).

4.7 Inspection of packaging. Sample packages and packs, and the inspection of the preservation-packaging, packing and marking for shipment and storage shall be in accordance with the requirements of section 5 and the documents specified therein.

5. PACKAGING

(The packaging requirements specified herein apply only for direct Government acquisition.)

5.1 Preservation-packaging, packing and marking. The equipment and accessories shall be preserved-packaged level A or C, packed level A, B or C as specified (see 6.2), and marked in accordance with MIL-M-3184, and as specified herein.

5.2 Cushioning and wrapping materials. Use of excelsior, newspaper, shredded paper (all types, including wax paper) and similar hygroscopic or non-neutral materials and all types of loose-fill materials for applications such as cushioning, filler, stuffing and dunnage for materials destined for shipboard stowage and use is prohibited, except that vermiculite is approved for packaging applications of liquid (chemical, petroleum, and so forth) products. Cushioning and wrapping materials selected shall incorporate properties and characteristics for resistance to fire. Examples are as follows:

UU-P-268 - Paper, kraft wrapping, type II, grade C or D.
PPP-C-850 - Polystyrene, expanded, grade SE, type I or II only.

Downloaded from http://www.everyspec.com

PPP-C-1120	- Bound fiber, uncompressed type III or IV, class C.
MIL-R-6130	- Cellular rubber, grade A.
MIL-R-20092	- Cellular rubber, class 1 or 4.
MIL-P-26514	- Polyurethane foam (rigid or flexible).

5.3 Asbestos and asbestiform materials. Items containing asbestos and asbestiform-like materials shall be packaged individually, in sets or quantity as required (see 6.2) for use in a sealed impermeable container. Flexible containers shall be heat-sealed; rigid containers shall be enclosed in a flexible container and heat-sealed. All containers, interior and exterior, in addition to the markings required in accordance with the Occupational Safety and Health Administration (OSHA) Rules and Regulations, shall be marked as follows:

"CAUTION
CONTAINS ASBESTOS FIBERS
AVOID CREATING DUST
BREATHING ASBESTOS DUST MAY CAUSE
SERIOUS BODILY HARM".

5.3.1 Talc and talcum. Talc and talcum used in the packaging process of items shall be free of asbestos and asbestiform-like materials.

6. NOTES

6.1 Intended use. The pneumatic trolley type chain hoists with traverse drive covered by this specification are intended for use in areas with low headroom and load eccentricity.

6.2. Acquisition requirements. Acquisition documents should specify the following:

(a) Title, number and date of this specification.
(b) Issue of DODISS to be cited in the solicitation, and if required, the specific issue of individual documents referenced (see 2.1.1 and 2.2).
(c) Type required (see 1.2).
(d) When first article is required (see 3.1).
(e) Length of lift (range) required and operating height of hoist above deck (see 3.4.1, 3.4.2, 3.4.3, 3.17).
(f) If nuclear lifting is to be performed with the hoist (see 3.6).
(g) If construction for high impact shock is required (see 3.7.2, 4.3, 4.6.1).
(h) When chain other than 1-inch pitch is required (see 3.9.2).
(i) Whether chain reel or chain, bags or baskets are required (see 3.10.2).
(j) Type of load hook required (see 3.12.1).
(k) If hook plating is required (see 3.12.1.1).
(l) If shackle is required (see 3.12.2).
(m) If non-overhauling transmission is required (see 3.18.1).
(n) Painting requirements. Painting Method I should be specified for hoists subject to severe environments, such as salt water spray (see 3.26).
(o) If one other first article model is required (see 4.3).
(p) If high impact shock tests are required (see 4.6.1).
(q) If life test is required (see 4.6.5).

Downloaded from http://www.everyspec.com

(r) Levels of preservation-packaging and packing required (see 5.1).
(s) Sets or quantity required of items containing asbestos and asbestiform-like materials (see 5.3).

6.3 Consideration of data requirements. The following data requirements should be considered when this specification is applied on a contract. The applicable Data Item Descriptions (DID's) should be reviewed in conjunction with the specific acquisition to ensure that only essential data are requested/provided and that the DID's are tailored to reflect the requirements of the specific acquisition. To ensure correct contractual application of the data requirements, a Contract Data Requirements List (DD Form 1423) must be prepared to obtain the data, except where DoD FAR Supplement 27.475-1 exempts the requirement for a DD Form 1423.

Reference Paragraph	DID Number	DID Title	Suggested Tailoring
3.3.1	DI-SAFT-80100	System safety program plan	Applicable Naval activity report
3.3.1	DI-SAFT-80101	System safety hazard analysis report	----
3.3.1	DI-SAFT-80102	Safety assessment report	----
3.27.1	DI-R-7071	Reliability program plan	----
3.27.1	DI-R-7085	Failure mode, effects, and criticality analysis report	----
3.27.1	DI-R-7082	Reliability predictions report	----
3.27.1	DI-R-7080	Reliability status report	----
3.27.2	DI-MNTY-80822	Maintainability program plan	----
3.27.2	DI-MNTY-80827	Maintainability predictions report	----
3.27.2	DI-MNTY-80823	Maintainability status report	----
4.6.1	DI-ENVR-80708	Shock test reports	----
4.6.2	UDI-T-23762	Report, vibration testing	----
4.6.4	DI-HFAC-80272	Equipment airborne sound measurements test report	----
	DI-HFAC-80273	Equipment structureborne vibratory acceleration measurement plan	----
	DI-HFAC-80274	Equipment structureborne vibration acceleration measurement test reports	----
4.6.5	DI-NDTI-80809	Test reports	----

The above DID's were those cleared as of the date of this specification. The current issue of DoD 5010.12-L, Acquisition Management Systems and Data Requirements Control List (AMSDL), must be researched to ensure that only current, cleared DID's are cited on the DD Form 1423.

Downloaded from http://www.everyspec.com

6.4 First article. When a first article inspection is required, the item should be a first article sample. The first article should consist of one unit. The contracting officer should include specific instructions in acquisition documents regarding arrangements for examinations, approval of first article test results and disposition of first articles. Invitations for bids should provide that the Government reserves the right to waive the requirement for samples for first article inspection to those bidders offering a product which has been previously acquired or tested by the Government, and that bidders offering such products, who wish to rely on such production or test, must furnish evidence with the bid that prior Government approval is presently appropriate for the pending contract.

6.5 Technical manuals. The requirement for technical manuals should be considered when this specification is cited on a contract. If technical manuals are required, military specifications and standards that have been cleared and listed in DOD 5010.12-L, Acquisition Management Systems and Data Requirements Control List (AMSDL) must be listed on a separate Contract Data Requirements List (DD Form 1423), which is included as an exhibit to the contract. The technical manuals must be acquired by separate contract line item in the contract.

6.6 Provisioning. Provisioning Technical Documentation (PTD), spare parts, and repair parts should be furnished as specified in the contract.

6.6.1 When ordering spare parts or repair parts for the equipment covered by this specification, the contract should state that such spare parts and repair parts should meet the same requirements and quality assurance provisions as the parts used in the manufacturer of the equipment. Packaging for such parts should also be specified.

6.7 Non-specification materials. If metals or structural materials, other than those listed in 3.2.1 are used in a manufacturing run, the following documentation should be supplied to the contracting activity and noted in parts lists and drawings:

(a) Part name.
(b) Part number.
(c) Hoist serial number.
(d) Hoist model number.
(e) Material used.
(f) Physical characteristics.
(g) Heat treatment.
(h) Precautions applicable to failure modes.
(i) Applicable maintenance requirements.

6.8 Subject term (key word) listing.

Airborne noise
Load hook
Pendant unit
Reliability and maintainability
Shackle
Shuttle valve

Downloaded from http://www.everyspec.com

6.9 Changes from previous issue. Asterisks are not used in this revision to identify changes with respect to the previous issue due to the extensiveness of the changes.

Preparing activity:
Navy - SH
(Project 3950-N049)

Downloaded from http://www.everyspec.com

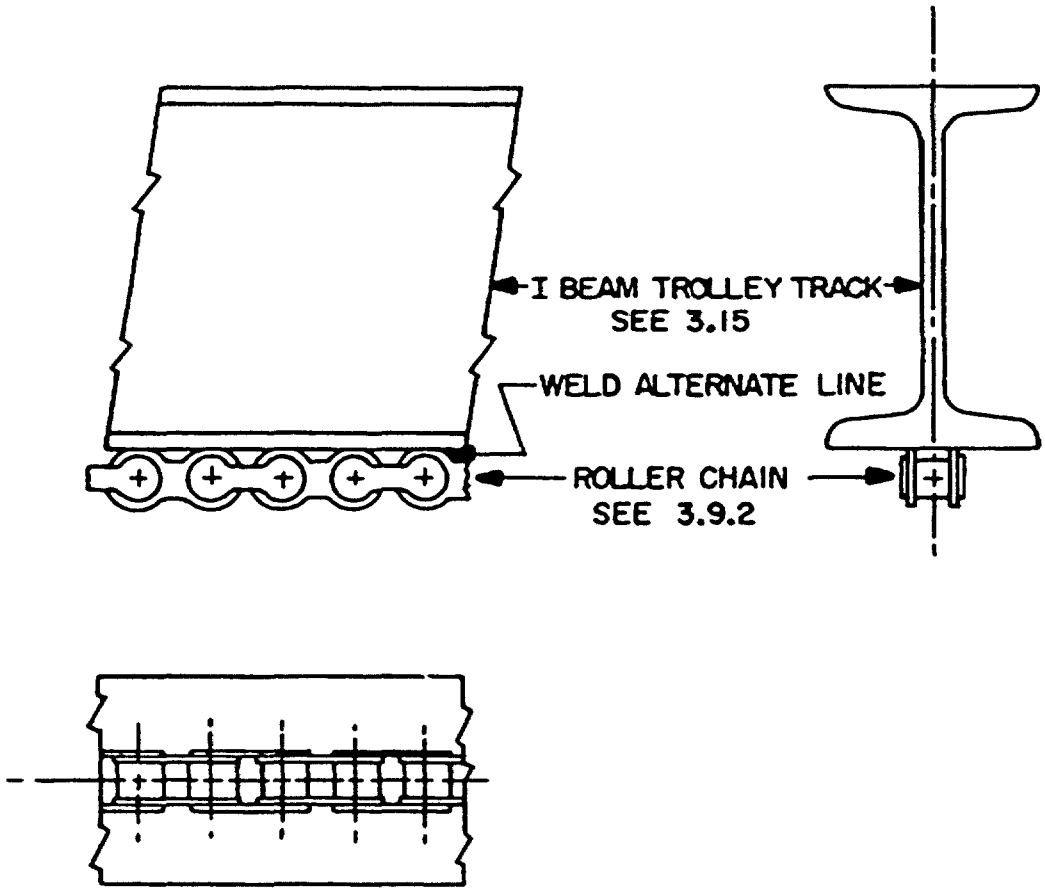

FIGURE 1. Sketch of trolley track.

Downloaded from http://www.everyspec.com

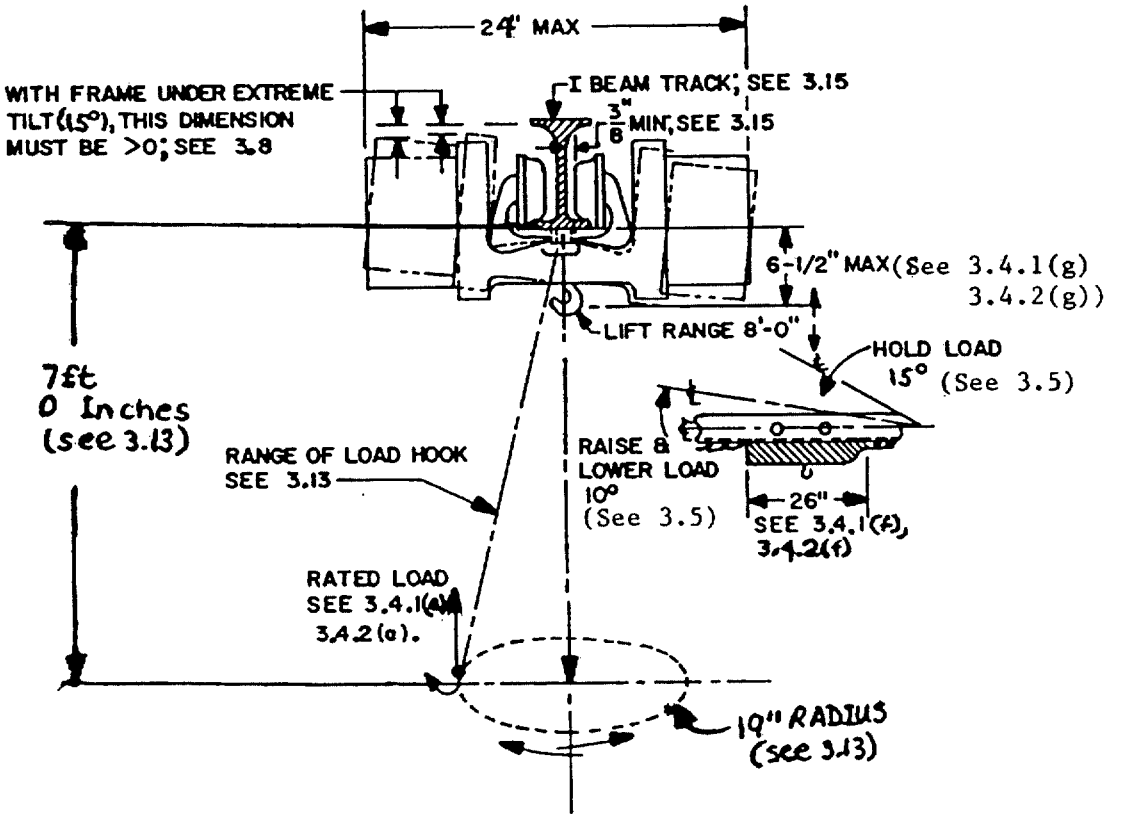

FIGURE 2. General requirements for type I and type II hoists.

Downloaded from http://www.everyspec.com

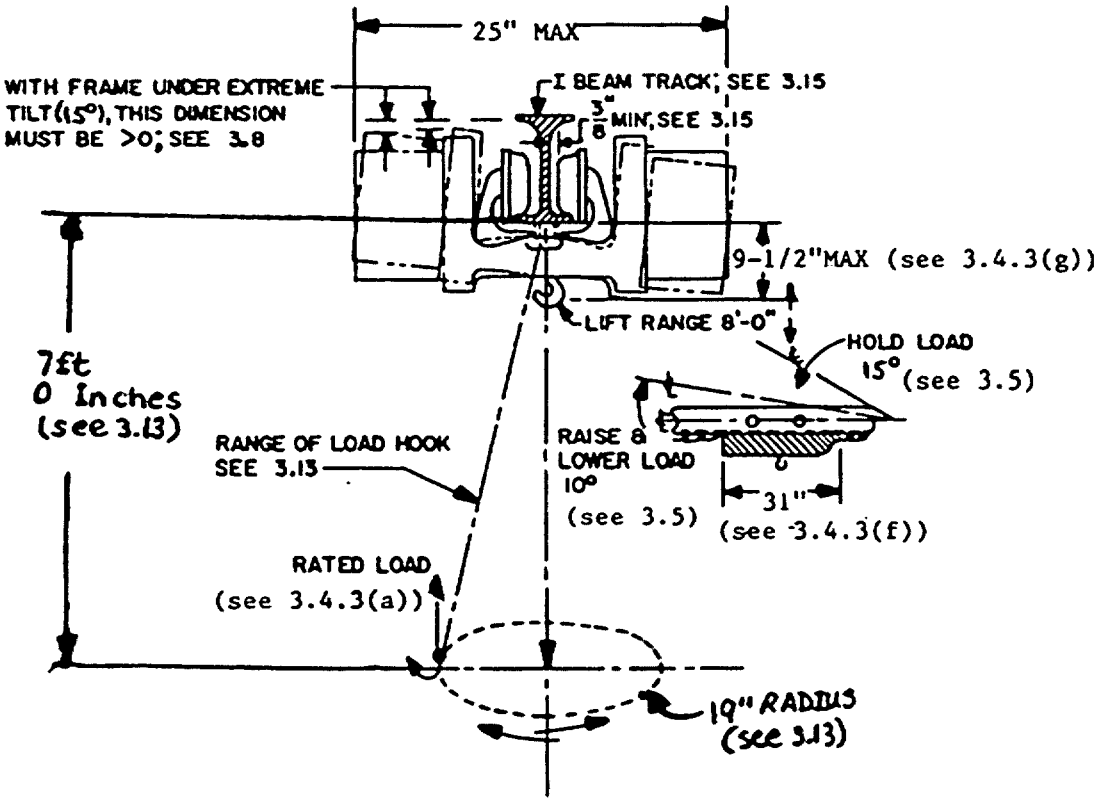

FIGURE 3. General requirements for type III hoists.

Downloaded from http://www.everyspec.com

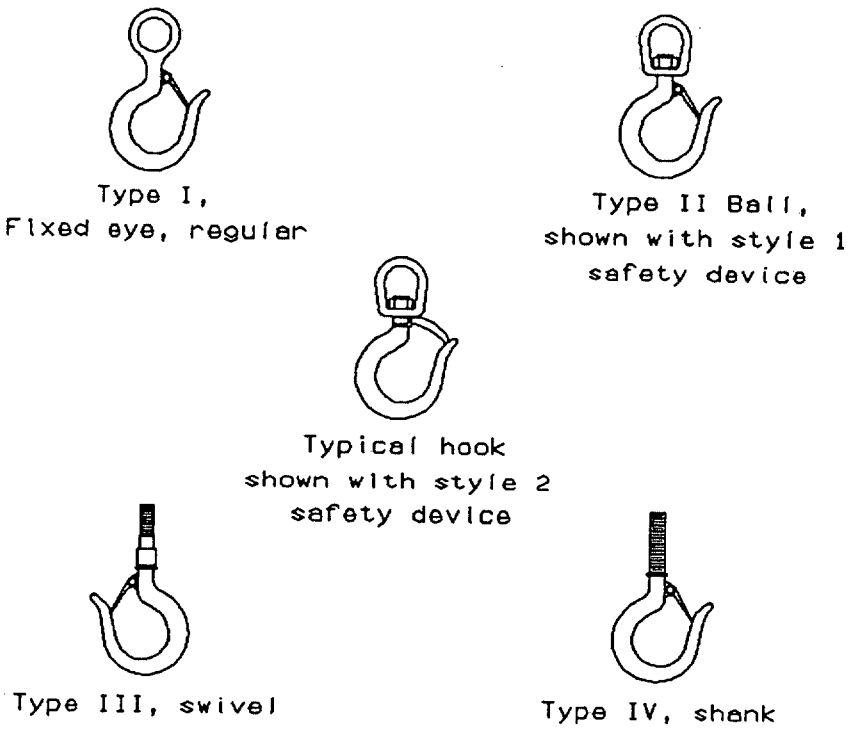

FIGURE 4. Illustrating types of hoist hooks (shown with safety devices, style 1 and style 2).

Downloaded from http://www.everyspec.com

STANDARDIZATION DOCUMENT IMPROVEMENT PROPOSAL

INSTRUCTIONS

1. The preparing activity must complete blocks 1, 2, 3, and 8. In block 1, both the document number and revision letter should be given.
2. The submitter of this form must complete blocks 4, 5, 6, and 7.
3. The preparing activity must provide a reply within 30 days from receipt of the form.

NOTE: This form may not be used to request copies of documents, nor to request waivers, or clarification of requirements on current contracts. Comments submitted on this form do not constitute or imply authorization to waive any portion of the referenced document(s) or to amend contractual requirements.

I RECOMMEND A CHANGE:

1. DOCUMENT NUMBER: MIL-H-24591B(SH)
2. DOCUMENT DATE (YYMMDD): 28 February 1994
3. DOCUMENT TITLE: HOIST, CHAIN, PNEUMATIC, LOW HEADROOM, TROLLEY TYPE
4. NATURE OF CHANGE (*Identify paragraph number and include proposed rewrite, if possible. Attach extra sheets as needed.*)
5. REASON FOR RECOMMENDATION
6. SUBMITTER
   a. NAME (*Last, First, Middle Initial*)
   b. ORGANIZATION
   c. ADDRESS (*Include Zip Code*)
   d. TELEPHONE (*Include Area Code*)
      (1) Commercial
      (2) AUTOVON (*If applicable*)
7. DATE SUBMITTED (*YYMMDD*)
8. PREPARING ACTIVITY
   a. NAME
      COMMANDER
      NAVAL SEA SYSTEMS COMMAND
   b. TELEPHONE (*Include Area Code*)
      (1) Commercial: Mr. V. Amodeo 703-602-5250
      (2) AUTOVON: AV 332-5250
   c. ADDRESS (*Include Zip Code*)
      SEA 03R42
      2531 JEFFERSON DAVIS HWY
      ARLINGTON, VA 22242-5160

IF YOU DO NOT RECEIVE A REPLY WITHIN 45 DAYS, CONTACT:
Defense Quality and Standardization Office
5203 Leesburg Pike, Suite 1403, Falls Church, VA 22041-3466
Telephone (703) 756-2340 AUTOVON 289-2340