MIL-H-18160C(SH)
9 May 1978
SUPERSEDING
MIL-H-18160B(SHIPS)
7 December 1964
(See 6.5)

MILITARY SPECIFICATION

HOSE ASSEMBLIES, CORRUGATED STEEL, 200 LB/IN^2 AND 425°F MAXIMUM STEAM SERVICE RATING

This specification is approved for use by the Naval Sea Systems Command and is available for use by all Departments and Agencies of the Department of Defense.

1. SCOPE

1.1 Scope. This specification covers coupled flexible metal hose of either helical or annular corrugated type construction for steam service up to 200 pounds per square inch (lb/in^2) and 425°F.

1.2 Classification. Hose assemblies shall be of the following classes, as specified (see 6.2.1):

Class S - Standard material.
Class NM - Nonmagnetic material.

2. APPLICABLE DOCUMENTS

2.1 Issues of documents. The following documents, of the issue in effect on date of invitation for bids or request for proposal, form a part of this specification to the extent specified herein.

SPECIFICATIONS

FEDERAL

QQ-C-390 - Copper Alloy Castings (Including Cast Bar).
QQ-S-698 - Steel, Sheet and Strip, Low Carbon.
QQ-W-423 - Wire, Steel, Corrosion-Resisting.
PPP-B-585 - Boxes, Wood, Wirebound.
PPP-B-601 - Boxes, Wood, Cleated-Plywood.
PPP-B-621 - Boxes, Wood, Nailed and Lock-Corner.

MILITARY

MIL-P-116 - Preservation-Packaging, Methods of.
MIL-B-121 - Barrier Material, Greaseproofed, Waterproofed, Flexible.
MIL-B-16444 - Bronze, Hydraulic, Ounce, Metal Castings.
MIL-B-16541 - Bronze, Valve Castings.
MIL-I-17214 - Indicator, Permeability; Low-MU (GO-NO-GO).

STANDARDS

MILITARY

MIL-STD-105 - Sampling Procedures and Tables for Inspection by Attributes.
MIL-STD-129 - Marking for Shipping and Storage.

(Copies of specifications, standards, drawings, and publications required by contractors in connection with specific procurement functions should be obtained from the procuring activity or as directed by the contracting officer.)

Beneficial comments (recommendations, additions, deletions) and any pertinent data which may be of use in improving this document should be addressed to: Commander, Naval Ship Engineering Center, SEC 6124, Department of the Navy, Washington, DC 20362 by using the self-addressed Standardization Document Improvement Proposal (DD Form 1426) appearing at the end of this document or by letter.

FSC 4720

2.2 Other publications. The following documents, form a part of this specification to the extent specified herein. Unless otherwise indicated, the issue in effect on date of invitation for bids or request for proposal shall apply.

AMERICAN IRON AND STEEL INSTITUTE (AISI)
Steel Products Manual.

(Application for copies should be addressed to the American Iron and Steel Institute, 1000 16th Street, N. W., Washington, DC 20036.)

AMERICAN SOCIETY FOR TESTING AND MATERIALS (ASTM)
B61 - Steam or Valve Bronze Casting.
B62 - Composition Bronze or Ounce Metal Castings.

(Application for copies should be addressed to the American Society for Testing and Materials, 1916 Race Street, Philadelphia, PA 19103.)

NATIONAL BUREAU OF STANDARDS
Handbook H28 - Screw Thread Standards for Federal Services.

(Application for copies should be addressed to the Superintendent of Documents, Government Printing Office, Washington, DC 20402.)

UNIFORM CLASSIFICATION COMMITTEE
Uniform Freight Classification Ratings, Rules, and Regulations.

(Application for copies should be addressed to the Uniform Classification Committee Agent, G. F. Earl, Tariff Publication Officer, Room 1106, 222 South Riverside Plaza, Chicago, IL 60606.)

(Technical society and technical association specifications and standards are generally available for reference from libraries. They are also distributed among technical groups and using Federal agencies.)

3. REQUIREMENTS

3.1 Sample for first article inspection. Prior to beginning production a sample shall be examined as specified in 4.5 and tested as specified in 4.3 (see 6.4).

3.2 Materials. Materials shall be as specified in table I.

TABLE I. Materials.

	Class S	Class NM
Pressure carrier	Cold rolled steel, QQ-S-698	Corrosion-resistant steel, AISI type 321 or 304; with a maximum permeability not greater than 2.0 after fabrication.
Wire braid reinforcement	Corrosion-resisting steel, QQ-W-423, 300 series	Corrosion-resistant steel, AISI type 321 or 304; with a maximum permeability not greater than 2.0 after fabrication.
Wire guard	Steel, commercial grade AISI-SAE 1010, galvanized[1/] Aluminum	Half round, commercial brass. Aluminum.
Couplings	Malleable iron Carbon steel	Cast bronze, MIL-B-16444, QQ-C-390, alloy 922, ASTM B61 or ASTM B62.

1/ The amount of zinc on the wire guard shall be sufficient to pass the salt spray corrosion test specified in 4.3.6.

3.2.1 Reclaimed material shall be used to the maximum extent possible.

3.3 Construction. Hose shall consist of a corrugated pressure carrier (see 3.3.1), braided reinforcement (see 3.3.2), and a protective wire guard (see 3.3.3). [illegible] shall be complete with a mechanical coupling (see 3.3.4) on each end.

3.3.1 Pressure carrier. Pressure carrier shall be close pitch corrugated, one ply or multi-ply having either annular or helical corrugations. Construction, design wall thickness and number of corrugations shall be such as to allow hose to meet all requirements of this specification.

3.3.2 Braided reinforcement. Braided reinforcement shall be firmly secured by the end couplings and shall not have any loose wires protruding which would interfere with the tightness of the coupling.

3.3.3 Protective wire guard. Each hose shall have a protective wire guard helically wound outside the braid. The guard may be attached by mechanical means, brazing or welding. The guard may be fabricated of either half round steel or brass wire having a diameter of not less than 5/32-inch or 1/8-inch by 3/8-inch aluminum strip. Pitch and spacing of the guard shall be such as to provide maximum protection to the reinforcing braid while not adversely affecting the performance of the hose as specified herein. Class NM must use either brass or aluminum.

3.3.4 Couplings. Hose shall include a coupling on each end securely fastened by brazing or welding. Couplings shall be male tapered pipe threads in accordance with Handbook H28. Size of the pipe thread iron pipe size (i.p.s.) shall be the same as that of the hose (hose inside diameter).

3.3.5 Magnetic permeability. All materials used in the fabrication of class NM hose shall have a magnetic permeability of 2.0 or less after fabrication when tested in accordance with 4.3.7.

3.4 Size. Hose shall be of the sizes shown in table II, as specified [illegible]. This size corresponds to the nominal clear inside diameter of the [illegible].

TABLE II. Physical requirements.

Hose size	Inside bend diameter (minimum)	Hydrostatic burst pressure lb/in^2 (minimum)	Hydrostatic proof test (minimum)
Inches	Inches		
3/4	21	2600	400
1	26	1800	400
1-1/4	30	1600	400
1-1/2	35	1300	400
2	44	1000	400

3.5 Lengths. Unless otherwise specified (see 6.2.1), the length of hose shall be [illegible] feet + 2 inches including couplings. Lengths shall be continuous and shall contain not more than 1 circumferential joints.

3.6 Proof pressure. Where tested as specified in 4.3.2 hose shall show no evidence of wire breakage, coupling slippage, or other deformation.

3.7 Flexing. When tested as specified in 4.3.3, hose shall show no signs of leakage, wire breakage or other deformation.

3.8 Tension. When tested as specified in 4.3.4 hose shall show no evidence of wire braid breakage or pulling away from end coupling.

3.9 Burst. After completion of the tension test (see 4.3.4) hose shall be subjected to the burst test of 4.3.5 and shall not burst below the pressure specified in table II.

3.10 Corrosion. After completion of the tension test (see 4.3.4) and burst test (see 4.3.5) hose shall be subjected to the corrosion test of 4.3.6. Hose shall not show any indication of corrosion.

3.11 Marking.

3.11.1 Coupling. Each coupling shall be permanently marked with the contractor's name or trademark, the size and "200 lb/in^2". This marking shall be done in such a manner as not to damage the coupling nor affect its performance.

3.11.2 Hose. Each length of hose shall have a marking tag wired to the hose at each coupling advising users of maintenance and safety precautions. The following precautions shall be included:

(a) Do not twist flexible hose.
(b) Do not exceed working pressures stamped on attached coupling.
(c) Do not bend to a diameter smaller than the minimum inside bending diameter specified for the size involved.

4. QUALITY ASSURANCE PROVISIONS

4.1 Responsibility for inspection. Unless otherwise specified in the contract, the contractor is responsible for the performance of all inspection requirements as specified herein. Except as otherwise specified in the contract, the contractor may use his own or any other facilities suitable for the performance of the inspection requirements specified herein, unless disapproved by the Government. The Government reserves the right to perform any of the inspections set forth in the specification where such inspections are deemed necessary to assure supplies and services conform to prescribed requirements.

4.2 Classification of inspections. Inspection requirements specified herein are classified as follows:

(a) First article inspection (see 4.3).
(b) Quality conformance inspection (see 4.4).

4.3 First article inspection. First article inspection shall be conducted at the activity, as specified (see 6.2.1). The first article inspection shall consist of the examination specified in 4.5 and the tests specified in 4.3.1.

4.3.1 First article samples. Samples of class S hose assemblies shall be submitted as follows for the tests specified in 4.3.2 through 4.3.6. If only class NM hose is being offered then class NM will be tested.

(a) Two lengths each of hose in sizes 1 and 2 inches inside diameter complete with couplings attached. The overall length shall be not less than 15 feet for the tests specified in 4.3.2 and 4.3.3.
(b) One length each sizes 1 and 2 inches inside diameter hose complete with couplings attached, the overall length shall be not less than 5 feet (exclusive of couplings) for the tests specified in 4.3.4 through 4.3.6.

4.3.1.1 Class S hose sizes 1 and 2 inches, submitted as specified in 4.3.1 which have been tested and have satisfactorily passed the tests specified in 4.3.1 shall also qualify class NM and all other sizes of hose.

4.3.2 Proof pressure tests. Samples submitted as specified in 4.3.1(a) shall be subjected to the hydrostatic proof pressure specified in table II for a period of 15 minutes. A noncorroding test fluid shall be used. After successfully passing the hydrostatic proof pressure test, hose shall be coiled into a circle of the bend diameter specified in table II. The coil shall be rolled the entire length of the hose 10 times while being subjected to a hydrostatic pressure of 200 lb/in^2. After completion of the coiling test, hose shall be tested with a minimum pressure of 10 lb/in^2 air while under oil or water to detect any signs of leakage or for any other weaknesses. If water is used as an alternative to oil to detect leakage, assemblies shall be thoroughly dried to remove entrapped moisture.

4.3.3 Flexing test. After hoses have successfully passed the test specified in 4.3.2, they shall be subjected to flexing tests on a flexing device as shown on figure 1. Hose shall be bent to the bend diameter specified in table II. One inch size hose shall be subjected to a minimum of 25,000 cycles and the 2-inch size hose shall be given a minimum of

15,000 cycles of flexure while under 200 lb/in^2 and 425°F. steam service conditions. Hose shall be cycled at the rate of 20 cycles per minute. Flexing shall continue until leakage, failure or other weakness occurs.

4.3.4 Tension test. Samples submitted as specified in 4.3.1(b) shall be subjected to a 1500 pound tensile pull while under a hydrostatic pressure of 200 lb/in^2.

4.3.5 Burst test. After completion of the tension test specified in 4.3.4, hose shall be subjected to the hydrostatic burst pressure specified in table II and held for a period of 15 minutes. While under this pressure hose shall show no leakage or any other signs of weakness. After the minimum burst pressure has been met, the pressure shall be increased until failure occurs.

4.3.6 Corrosion test for zinc-coated (galvanized). Hose section used for the burst test (see 4.3.5) shall be subjected to a salt spary test for 18 consecutive hours, using a 4 percent sea salt solution, to determine if the coating is of sufficient thickness to resist atmospheric corrosion. Sample shall be properly cleaned with gasoline to remove grease and dirt.

4.3.7 Magnetic permeability (class NM hose only). Magnetic permeability shall be determined in accordance with MIL-I-17214.

4.4 Quality conformance inspection.

4.4.1 Lot. All hose assemblies of the same class and size presented for delivery at one time shall be considered a lot.

4.4.2 Sampling for examination and proof pressure tests. A random sample of hose lengths shall be selected from each lot in accordance with inspection level III of MIL-STD-105 and shall be subjected to the examination of 4.5 and the test of 4.6.1. The acceptance quality level (AQL) shall be 1.0 percent. If any sample fails to pass the examination or test, the entire lot shall be rejected.

4.4.3 Sampling for burst test. A 5-foot length of hose, with couplings attached, shall be selected from each lot for the burst test specified in 4.6.2. If the sample fails to pass the test, the entire lot, from which the sample was selected, shall be rejected.

4.5 Examination. Samples selected in accordance with 4.4.2 shall be examined for the following:

(a) Loose or broken braid wire.
(b) Wire guard as specified and securely attached.
(c) Couplings as specified.

4.6 Tests.

4.6.1 Proof pressure tests. Hose selected in accordance with 4.4.2 shall be subjected to the hydrostatic proof pressure specified in table II. A noncorroding test fluid shall be used. After successfully withstanding this test, all samples shall be coiled into a circle of the diameter specified in table II. The coil shall be rolled the entire length of the hose while being subjected to 200 lb/in^2 hydrostatic pressure.

4.6.2 Burst test. Hose, with couplings attached, selected in accordance with 4.4.3 shall be subjected to the hydrostatic burst pressure specified in table II and held for 15 minutes. While under this pressure the hose shall show no leakage or any other signs of weakness. After the minimum burst pressure has been met, the pressure shall be increased until failure occurs.

4.7 Inspection of preparation for delivery. Sample packages and packs and the inspection of the preservation-packaging, packing and marking for shipment and storage shall be in compliance with section 5 of this document.

5. PREPARATION FOR DELIVERY

(The preparation for delivery requirements specified herein apply only for direct Government procurements. For the extent of applicability of the preparation for delivery requirements of referenced documents listed in section 2, see 6.3).

5.1 Preservation-packaging. Preservation-packaging shall be level A or C as specified (see 6.2.1).

5.1.1 Level A. Each hose shall be cleaned, dried, preserved and unit protected method I in accordance with the requirements of MIL-P-116. Selection of the cleaning and drying process shall be at the contractors option. Each hose interior shall be coated with a preservative compound conforming to P-3 or P-21 at the contractors option. Hose ends shall be sealed with plugs or caps that will provide protection against entry of any foreign material alternatively, ends may be sealed with a greaseproof barrier material conforming to type I, grade A, class 2 of MIL-B-121 extending approximately four inches over the open ends and onto the hose body and secured with a minimum 1-inch wide water resistant, pressure senitive tape. The barrier wrap shall be provided with a final, full covering burlap overwrap which shall be securely fastened. Exposed threads shall be protected from damage. Each hose shall be coiled in a uniform and compact manner and to an inside diameter of not less than that specified in 3.4, table II, as applicable to the hose size. Each coil shall be secured in a minimum of three places, placed approximately equidistant apart.

5.1.2 Level C. Each hose shall be preserved-packaged in a manner to afford protection against corrosion, deterioration and physical damage during shipment from the supply source to the using activity for immediate use. Each hose, when furnished in coil form shall be coiled and secured as specified in 5.1.1. This level may conform to the contractors normal retail procedure when such meets the requirements of this level.

5.2 Packing. Packing shall be level A, B, or C as specified (see 6.2.1).

5.2.1 General requirements for levels A and B. Shipping containers shall be of similar construction, of uniform size, and of minimum cube and weight consistent with the protection required. Shipping containers shall contain identical quantities of identical hoses when practicable. Shipping container contents shall be provided the necessary anchoring, cleaning and bracing to assure a nonshifting load and free of damage when subjected to repeated handlings and redistribution.

5.2.2 Level A. Hose, packaged as specified (see 5.1) shall be packed in containers conforming to any of the following specifications at the contractors option:

Specification	Container	Type, style, class
PPP-B-585	Wood, wirebound	Class 3
PPP-B-601	Wood, cleated, plywood	Overseas type
PPP-B-621	Wood, nailed and lock-corner	Class 2

Other options provided in the applicable selected specification shall be at the contractors option. Containers shall be closed, banded or reinforced in accordance with the applicable container specification or appendix thereto. The gross weight of containers shall not exceed 200 pounds except when the weight of a single coil (length) exceeds this amount.

5.2.3 Level B. Hose, packaged as specified (see 5.1) shall be packed in containers conforming to any of the following specifications at the contractors option:

Specification	Container	Type, style, class
PPP-B-585	Wood, wirebound	Class 2 or 1
PPP-B-601	Wood, cleated, plywood	Domestic
PPP-B-621	Wood, nailed and lock-corner	Class 1

Other container requirements shall be as specified in 5.2.2.

5.2.4 Level C. Hose, packaged as specified (see 5.1) shall be packed in containers in a manner which will insure carrier acceptance at the lowest rate and which shall afford protection against physical and mechanical damage during shipment from the supply source to the using activity for immediate use. Shipping containers shall conform to the Uniform Freight Classification Rules and Regulations or other carrier regulations as applicable to the mode of transportation. The contractors normal procedure may be used when such meets the requirements of this level.

5.3 Marking. In addition to any special marking required (see 3.11 and 6.2.1), unit packages and shipping containers shall be marked in accordance with MIL-STD-129.

6. NOTES

6.1 Intended use. Hose is for use only for temporary steam connections such as, ship-to-ship and dock to ship service. When carried onboard ship, class NM hose only shall be carried on minesweepers and other ships having low magnetic requirements. Class S hose shall be carried on all other ships.

6.2 Ordering data.

6.2.1 Procurement requirements. Procurement documents should specify the following:

(a) Title, number, and date of this specification.
(b) Class required (see 1.2).
(c) First article inspection activity (see 3.1 and 4.3).
(d) Size required (see 3.4).
(e) When length of hose shall not be 50 feet (see 3.5).
(f) Level of preservation-packaging and level of packing required (see 5.1 and 5.2).

6.3 Sub-contracted material and parts. The preparation for delivery requirements of referenced documents listed in Section 2 do not apply when material and parts are procured by the contractor for incorporation into the equipment and lose their separate identity when the equipment is shipped.

6.4 First article inspection. Invitations for bids should provide that the Government reserves the right to waive the requirement for samples for first article inspection as to those bidders offering a product which has been previously procured or tested by the Government, and that bidders offering such products, who wish to rely on such production or test, must furnish evidence with the bid that prior Government approval is presently appropriate for the pending procurement.

6.5 Changes from previous issue. The symbol "#" is not used in this revision to identity changes with respect to the previous issue, due to the extensiveness of the changes.

Preparing activity:
Navy - SH

(Project 4720-N454)

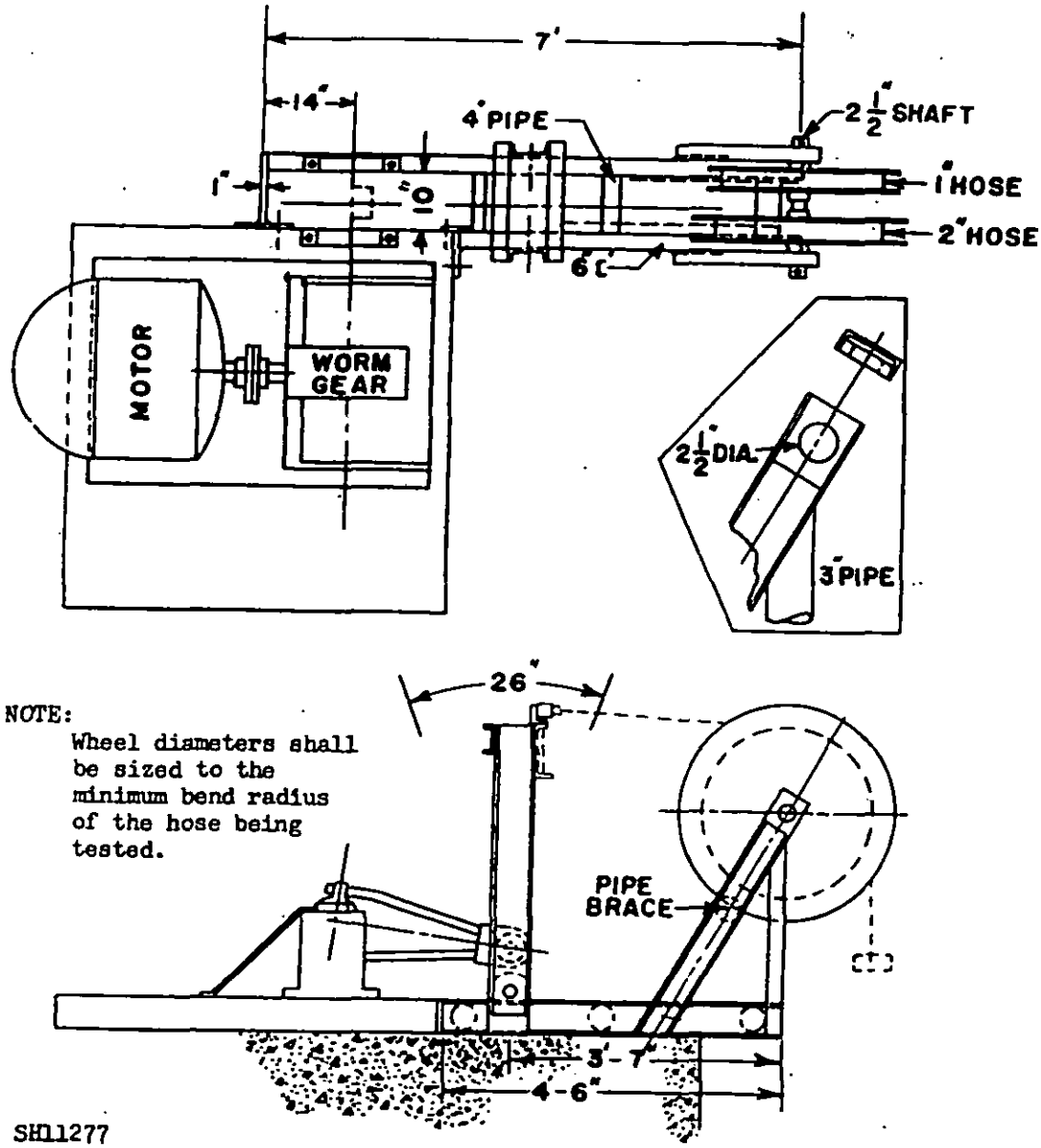

NOTE:
Wheel diameters shall be sized to the minimum bend radius of the hose being tested.

FIGURE 1. Flexing apparatus.

INSTRUCTIONS: In a continuing effort to make our standardization documents better, the DoD provides this form for use in submitting comments and suggestions for improvements. All users of military standardization documents are invited to provide suggestions. This form may be detached, folded along the lines indicated, taped along the loose edge *(DO NOT STAPLE)*, and mailed. In block 5, be as specific as possible about particular problem areas such as wording which required interpretation, was too rigid, restrictive, loose, ambiguous, or was incompatible, and give proposed wording changes which would alleviate the problems. Enter in block 6 any remarks not related to a specific paragraph of the document. If block 7 is filled out, an acknowledgement will be mailed to you within 30 days to let you know that your comments were received and are being considered.

NOTE: This form may not be used to request copies of documents, nor to request waivers, deviations, or clarification of specification requirements on current contracts. Comments submitted on this form do not constitute or imply authorization to waive any portion of the referenced document(s) or to amend contractual requirements.

(Fold along this line)

(Fold along this line)

DEPARTMENT OF THE NAVY

NO POSTAGE NECESSARY IF MAILED IN THE UNITED STATES

OFFICIAL BUSINESS
PENALTY FOR PRIVATE USE $300

BUSINESS REPLY MAIL
FIRST CLASS PERMIT NO. 12503 WASHINGTON D. C.

POSTAGE WILL BE PAID BY THE DEPARTMENT OF THE NAVY

Commander
Naval Ship Engineering Center (Sec 6124)
Department of the Navy
Washingon DC 20362

STANDARDIZATION DOCUMENT IMPROVEMENT PROPOSAL

(See Instructions – Reverse Side)

1. DOCUMENT NUMBER

2. DOCUMENT TITLE

3a. NAME OF SUBMITTING ORGANIZATION

b. ADDRESS *(Street, City, State, ZIP Code)*

4. TYPE OF ORGANIZATION *(Mark one)*

- ☐ VENDOR
- ☐ USER
- ☐ MANUFACTURER
- ☐ OTHER *(Specify)*: _____

5. PROBLEM AREAS

a. Paragraph Number and Wording:

b. Recommended Wording:

c. Reason/Rationale for Recommendation:

6. REMARKS

7a. NAME OF SUBMITTER *(Last, First, MI)* – Optional

b. WORK TELEPHONE NUMBER *(Include Area Code)* – Optional

c. MAILING ADDRESS *(Street, City, State, ZIP Code)* – Optional

8. DATE OF SUBMISSION *(YYYYMMDD)*

DD FORM 1426, 82 MAR

PREVIOUS EDITION IS OBSOLETE.