MILITARY SPECIFICATION

GASOHOL, AUTOMOTIVE, LEADED OR UNLEADED

This specification is approved for use by all Departments and Agencies of the Department of Defense.

1. SCOPE.

1.1 Scope. This specification covers commercial leaded or unleaded Gasohol for use in automotive spark-ignition engines under all climatic conditions within the Continental United States (including Alaska and Hawaii), (see 6.1).

1.2 Classification

1.2.1 Grades. The leaded and unleaded Gasohols shall be of three grades as follows. The major differences among these grades are in the antiknock index levels.

Grade	ASTM antiknock index
Limited	See table IV
Regular	See table IV
Premium	See table IV

1.2.2 Classes. Each grade is divided into five volatility and water miscibility classes, as follows, to provide for local and seasonal climatic conditions (see 3.6 and tables I, II, IV and V):

Beneficial comments (recommendations, additions, deletions) and any pertinent data which may be of use in improving this document should be addressed to: US Army Mobility Equipment Research and Development Command, ATTN: DRDME-DS, Fort Belvoir, VA 22060 by using the self-addressed Standardization Document Improvement Proposal (DD Form 1426) appearing at the end of this document or by letter.

FSC 9130

Class		
Volatility	Water Miscibility	Condition of use: ambient temperatures
A	1	Very Hot
B	2	Hot
C	3	Warm
D	4	Mild
E	5	Cold

2. APPLICABLE DOCUMENTS

2.1 Government documents.

2.1.1 Specifications and standards. Unless otherwise specified (see 6.2), the following specifications and standards of the issue listed in that issue of the Department of Defense Index of Specifications and Standards (DoDISS) specified in the solicitation, form a part of this specification to the extent specified herein.

SPECIFICATION

FEDERAL

VV-G-1690 - Gasoline, Automotive, Leaded or Unleaded.

STANDARDS

FEDERAL

FED-STD-791 -Lubricants, Liquid Fuels and Related Products; Methods of Testing.

MILITARY

MIL-STD-105 - Sampling Procedures and Tables for Inspection by Attributes.

MIL-STD-290 - Packaging, Packing, and Marking of Petroleum and Related Products.

(Copies of military specifications and standards required by manufacturers in connection with specific acquisition functions should be obtained from the procuring activity or as directed by the contracting officer.)

2.1.2 Other Government documents, drawings, and publications. The following other Government documents, drawings, and publications form a part of this specification to the extent specified herein.

U.S. ENVIRONMENTAL PROTECTION AGENCY PUBLICATION

EPA MSAPC Advisory Circular A/C No. 26-B.

(EPA publications may be obtained from the U.S. Environmental Protection Agency, 401 M Street, SW, Washington, DC 20460.)

CODE OF FEDERAL REGULATIONS

27 CFR 211 - Bureau of Alcohol, Tobacco, and Firearms Regulations Relating to the Distribution and Use of Denatured Alcohol and Rum.
27 CFR 212 - Bureau of Alcohol, Tobacco, and Firearms Regulations Relating to Formulas for Denatured Alcohol and Rum.
49 CFR 171 to 179 - Department of Transportation Hazardous Materials Regulations.

(The Code of Federal Regulations is available from the Superintendent of Documents, US Government Printing Office, Washington, DC 20402. Orders for above publications should cite the applicable CFR part number.)

2.2 Other publications. The following documents form a part of this specification to the extent specified herein. The issue of the documents which are indicated as DoD adopted shall be the issue listed in the current DoDISS and the supplement thereto, if applicable.

AMERICAN SOCIETY FOR TESTING AND MATERIALS (ASTM) STANDARDS

D 86 - Distillation of Petroleum Products.
D 130 - Detection of Copper Corrosion from Petroleum Products by the Copper Strip Tarnish Test.
D 270 - Sampling Petroleum and Petroleum Products.
D 323 - Vapor Pressure of Petroleum Products (Reid Method).
D 381 - Existent Gum in Fuels by Jet Evaporation.
D 525 - Oxidation Stability of Gasoline (Induction Period Method).
D 1266 - Sulfur in Petroleum Products and Liquified Petroleum Gases.
D 1613 - Acidity in Volatile Solvents and Chemical Intermediates.
D 1744 - Water in Liquid Petroleum Products by Karl Fisher Reagent.
D 2276 - Particulate Contaminate in Aviation Turbine Fuels, Appendix 2.
D 2533 - Vapor-Liquid Ratio of Gasoline.
D 2547 - Lead in Gasoline, Volumetric Chromate Method.
D 2551 - Vapor Pressure of Petroleum Products (Micro Method).
D 2599 - Lead in Gasoline by X-Ray Spectrometry.
D 2622 - Sulfur by X-Ray Spectrometry.
D 2699 - Knock Characteristics of Motor Fuels by the Research Method.
D 2700 - Knock Characteristics of Motor Fuels by the Motor Method.
D 2885 - Research and Motor Method Octane Ratings Using On-line Analyzers.
D 3116 - Trace Amounts of Lead in Gasoline.
D 3229 - Low Levels of Lead in Gasoline by X-Ray Spectrometry.
D 3231 - Phosphorus in Gasoline.
D 3237 - Lead in Gasoline by Atomic Absorption Spectrometry.

D 3242 - Total Acidity in Aviation Turbine Fuels.
E 203 - Test for Water Using Karl Fischer Reagent.

The test methods listed above are included in Part 23, 24, 25, 29, or 47 of the Annual Book of ASTM Standards. The methods can also be purchased separately.

(Application for copies should be addressed to the American Society for Testing and Materials, 1916 Race Street, Philadelphia, PA 19103.)

(Industry association specifications and standards are generally available for reference from libraries. They are also distributed among technical groups and using Federal agencies.)

2.3 Order of precedence. In the event of a conflict between the text of this specification and the references cited herein, the text of this specification shall take precedence.

3. REQUIREMENTS

3.1 Materials. The Gasohol shall be composed of 90 percent volume gasoline and 10 percent volume ethyl alcohol. A tolerance of 1 percent is established.

3.2 Legal requirement. Gasohol furnished under this specification must meet all applicable legal requirements in accordance with the Code of Federal Regulations.

3.3 Gasoline. The gasolines shall be volatile hydrocarbon fuels conforming to VV-G-1690. They must contain no oxygenized blending components (alcohols or ethers) other than minor amounts used as anti-icing additives.

3.4 Ethyl alcohol. The ethyl alcohol shall have a minimum purity of 98.5 percent by volume and shall be completely denatured. The total volume of denaturant, which is approved for fuel alcohol, may be included in the volume of ethyl alcohol provided it does not exceed the 5 percent volume specified. The ethyl alcohol to be used shall be derived from renewable sources and shall exclude alcohol made from petroleum, natural gas, and coal.

3.5 Additives. The unleaded Gasohol may contain antioxidants, metal deactivators, corrosion inhibitors, dyes and nonphosphorus containing deposit modifiers. The leaded Gasohol may contain antioxidants, metal deactivators, corrosion inhibitors, lead antiknock compounds, phosphorus containing deposit modifiers and dyes.

3.5.1 Antiknock compounds. The lead antiknock compound present in the finished leaded Gasohol shall not exceed the limits specified in table III. The antiknock compounds or mixtures shall contain appropriate quantities of scavenger compounds as required in blending automotive gasolines.

3.5.2 Other additives. Additives other than those specified above, such as detergents, dispersants, emulsifiers, solvent oils, etc., will be permitted in

procurement of Gasohol provided prior examinations have verified the absence of their potential deleterious effects. Permission for their use must be obtained from the US Army Mobility Equipment Research and Development Command, ATTN: DRDME-GL, Fort Belvoir, VA 22060. This request shall be accompanied by a report showing the chemical properties of the additive, laboratory engine performance tests and controlled fleet tests using fuels containing the maximum recommended concentration of the additive. Such additives must be compatible with any of the materials included in this specification and must not appreciably affect the specified chemical or physical properties.

3.6 Physical and chemical requirements. The physical and chemical requirements of Gasohol shall be as specified in tables I, II, III, and IV.

TABLE I. Volatility classes.

Characteristic	Requirement 1/				
	Class A	Class B	Class C	Class D	Class E
Distillation					
10% evap., °C max	(70)	(65)	(60)	(55)	(50)
50% evap., °C min	(77)	(77)	(77)	(77)	(77)
50% evap., °C max	121	118	116	113	110
90% evap., °C max	190	190	185	185	185
End point, °C max 2/	225	225	225	225	225
Reid vapor pressure (RVP) kPa max 3/	(62)	(69)	(79)	(93)	(103)
Temperature, °C min Vapor/Liquid (V/L) ratio = 20 4/	(60)	(56)	(51)	(47)	(41)

1/ Values given pertain to product at point of acceptance. Limiting values shown in parenthesis are applicable only to the base gasoline, VV-G-1690.
2/ End point includes additive residue if present.
3/ Reid vapor pressure values are given for each class but they are not limiting. The limiting criteria for controlling overall hot fuel handling (vapor lock, etc.) is the temperature at which the V/L = 20.
4/ At 760 mm. Hg. pressure (101.3 kPa).

TABLE II. Water miscibility classes.

Characteristic	Requirement				
	Class 1	Class 2	Class 3	Class 4	Class 5
Water tolerance: Phase separation after addition of 0.1% vol water shall not occur at a temperature (°C) greater than,	5	0	-10	-25	-40

TABLE III. Chemical requirements.

Property	Value
Unwashed gum, mg/100 ml	Report
Existent gum, mg/100 ml, max	5
Sulfur, % wt, max	
unleaded	0.10
leaded	0.15
Particulates 1/	Report
Water, ppm	Report
Corrosiveness to copper @ 50° C, max	1A
Lead content, g/l (g/gal) max	
unleaded	0.013 (0.05 2/)
leaded	1.1 (4.2)
Oxidation stability, minutes, min	240
Ethyl alcohol 3/ % vol	10 (±1%)
Water, % wt, max	1.25
Organic acidity (Free acid as Acetic), mg of KOH/g (wt %), max	0.070 (0.0076)

TABLE III. Chemical requirements. (Continued)

Property	Value
Denaturant:	
% vol, max	5
Type	Report
Other alcohols, % vol, max	1.0
Other impurities, max	Trace
Phosphorus, g/l (g/gal), max	
unleaded	0.0013 (0.005)

1/ Run according to ASTM D 2276, Appendix 2, except use 0.45 micron membrane filter.
2/ The intentional addition of lead compounds is not permitted.
3/ Ethyl alcohol must have a minimum purity of 98.5% . Requirements shown apply only to ethyl alcohol.

TABLE IV. Antiknock quality requirements 1/.

Gasohol Grade: State Group	Antiknock Index 2/ (R+M)/2 Minimum	
	Leaded	Unleaded
LIMITED GRADE:		
#1	87.0	85.0
#2	86.3	84.3
#3	85.5	83.5
#4	84.8	82.8
#5	84.0	82.0
#6	82.5	80.5
REGULAR GRADE:		
#1	89	87.0 3/
#2	88.5	86.3
#3	87.5	85.5
#4	87.5	84.8
#5	87.0	84.0
#6	86.0	82.5
PREMIUM GRADE:		
#1	93	90.0
#2	92.5	89.5

TABLE IV. Antiknock quality requirements 1/. (Continued)

Gasohol Grade: State Group	Antiknock Index 2/ (R+M)/2 Minimum	
	Leaded	Unleaded
PREMIUM GRADE: (Continued)		
#1	87.0	85.0
#3	91.5	88.5
#4	91.5	88.5
#5	91.0	88.0
#6	90.0	87.0

1/ See figure 1.
2/ Average of the Research Octane Number and the Motor Octane Number.
3/ Minimum Motor Octane Number must be 82.

3.7 Volatility. The volatility classes of Gasohol as defined in table I shall be supplied according to the requirements of table V. When alternate classes are permitted, the contractor may provide either class. Adjustments in altitude and climatic conditions have been considered in preparing this distribution schedule to minimize operational problems arising from hot fuel handling and cold starting. The limiting guide temperatures, maximum ninetieth percentile, utilized for determining the volatility class distribution are shown below:

Class	Daily high temperature
A	Greater than 43° C (109° F)
B	Less than 43° C (109° F)
C	Less than 36° C (95° F)
D	Less than 29° C (84° F)
E	Less than 21° C (70° F)

3.8 Water miscibility. The water miscibility classes of Gasohol as defined in table II shall be supplied according to the requirements of table VI. The limiting guide temperatures, minimum tenth percentiles which have been rounded for the areas and periods tabulated except for class 1, have been used to establish the water miscibility classes shown below:

Class	Nightly Low Temperature
1	Greater than 5° C (41° F)
2	Greater than 0° C (32° F)
3	Greater than -10° C (14° F)
4	Greater than -25° C (-13° F)
5	Greater than -40° C (-40° F)

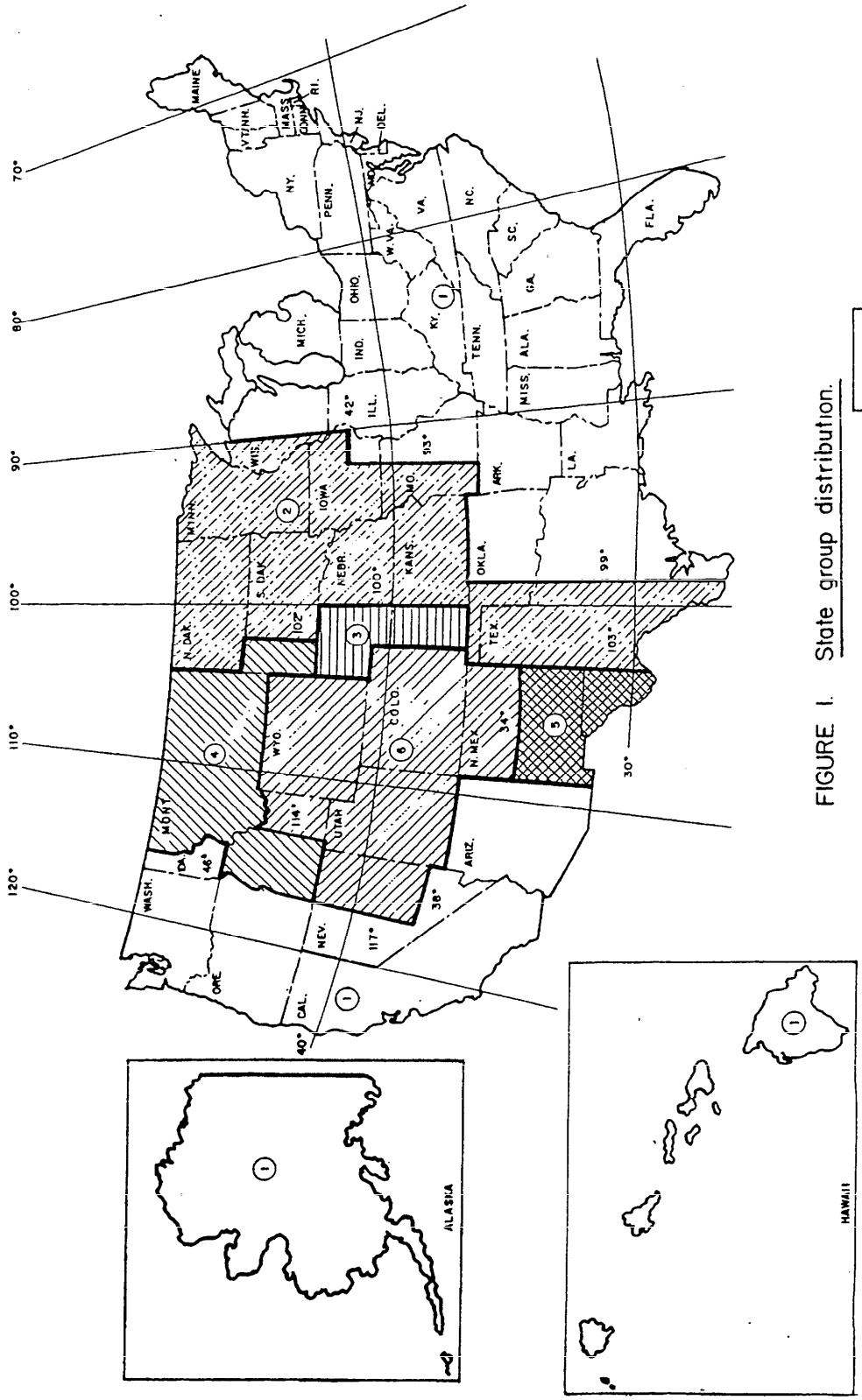

FIGURE 1. State group distribution.

X-3755

3.9 Workmanship. The Gasohol shall be visually free from undissolved water, sediment, and suspended matter and shall be clear and bright at the ambient temperature or 21° C whichever is higher.

3.10 Overseas procurement. Unless otherwise specified in the contract or purchase order (see 6.2), Gasohol procured overseas shall conform to the requirements of this specification at the time of delivery.

TABLE V. Geographical and seasonal distribution of volatility classes 1/.

State	Jan	Feb	Mar	Apr	May	Jun	Jul	Aug	Sept	Oct	Nov	Dec
Alabama	D	D	D/C	C	C	C	C/B	B	B/C	C	C/D	D
Alaska	E	E	E	E	E/D	E/D	D	D	D/E	E	E	E
Arizona	D	D/C	C/B	B	B/A	A	A	A	A	A/B	B/C	C/D
Arkansas	E/D	D	D/C	C	C	C/B	B	B	B/C	C/D	D	D/E
California: 2/												
North Coast	E/D	D	D	D/C	C	C/B	B	B	B	B/C	C/D	D/E
South Coast	D	D	D	D/C	C/B	B	B	B	B	B/C	C/D	D
Southeast	D	D/C	C/B	B	B/A	A	A	A	A	A/B	B/C	C/D
Interior	E/D	D	D	D/C	C/B	B	B	B	B	B/C	C/D	D/E
Colorado	E	E/D	D/C	C	C/B	B	B/A	A/B	B	B/C	C/D	D/E
Connecticut	E	E	E/D	D	D/C	C	C	C	C/D	D	D/E	E
Delaware	E	E	E/D	D	D/C	C	C	C	C	C/D	D/E	E
Dist. of Columbia	E	E	E/D	D	D/C	C	C	C	C	C/D	D/E	E
Florida	D	D	D/C	C	C	C	C	C	C	C	C/D	D
Georgia	D	D	D/C	C	C	C	C/B	B	B/C	C	C/D	D
Hawaii	C	C	C	C	C	C	C	C	C	C	C	C
Idaho	E	E/D	D	D/C	C/B	B	B	B	B	B/C	C/D	D/E
Illinois:												
N 40° Lat.	E	E	E/D	D	D/C	C	C	C	C	C/D	D/E	E
S 40° Lat	E	E	E/D	D/C	C	C	C/B	B/C	C	C/D	D	D/E
Indiana	E	E	E/D	D	D/C	C	C	C	C	C/D	D/E	E
Iowa	E	E	E/D	D/C	C	C/B	B/C	C	C	C/D	D/E	E
Kansas	E	E/D	D/C	C	C/B	B	B	B	B	B/C	C/D	D/E
Kentucky	E	E/D	D	D/C	C	C	C	C	C	C/D	D/E	E
Louisiana	D	D	D/C	C	C	C	C/B	B	B/C	C	C/D	D
Maine	E	E	E/D	D	D/C	C	C	C	C/D	D	D/E	E
Maryland	E	E	E/D	D	D/C	C	C	C	C	C/D	D/E	E
Massachusetts	E	E	E/D	D	D/C	C	C	C	C/D	D	D/E	E
Michigan	E	E	E/D	D	D/C	C	C	C	C/D	D	D/E	E
Minnesota	E	E	E/D	D	D/C	C	C	C	C	C/D	D/E	E
Mississippi	D	D	D/C	C	C	C	C/B	B	B/C	C	C/D	D
Missouri	E	E/D	D	D/C	C	C/B	B	B	B/C	C/D	D	D/E
Montana	E	E	E/D	D/C	C/B	B	B	B	B/C	C/D	D/E	E
Nebraska	E	E	E/D	D/C	C/B	B	B	B	B	B/C	C/D	D/E
Nevada:												
N 38° Lat.	E	E/D	D	D/C	C/B	B	B	B	B	B/C	C/D	D/E
S 38° Lat.	D	D/C	C/B	B	B/A	A	A	A	A	A/B	B/C	C/D
New Hampshire	E	E	E/D	D	D/C	C	C	C	C/D	D	D/E	E
New Jersey	E	E	E/D	D	D/C	C	C	C	C/D	D	D	E
New Mexico:												
N 34° Lat.	E/D	D	D/C	C/B	B/A	A	A	A/B	B	B/C	C/D	D
S 34° Lat.	D	D/C	C/B	B	B/A	A	A	A	A/B	B/C	C/D	D
New York	E	E	E/D	D	D/C	C	C	C	C/D	D	D/E	E
North Carolina	E/D	D	D	D/C	C	C	C/B	B	B/C	C/D	D	D/E
North Dakota	E	E	E/D	D	D/C	C/B	B	B	B/C	C/D	D/E	E
Ohio	E	E	E/D	D	D/C	C	C	C	C	C/D	D/E	E

TABLE V. Geographical and seasonal distribution of volatility classes 1/.

State	Jan	Feb	Mar	Apr	May	Jun	Jul	Aug	Sept	Oct	Nov	Dec
Oklahoma	E/D	D	D/C	C	C/B	B	B	B	B	B/C	C/D	D/E
Oregon:												
E 122° long.	E	E/D	D	D	D/C	C/B	B	B	B/C	C/D	D	D/E
W 122° long.	E	E/D	D	D	D/C	C	C	C	C	C/D	D/E	E
Pennsylvania	E	E	E/D	D	D/C	C	C	C	C/D	D	D/E	E
Rhode Island	E	E	E/D	D	D/C	C	C	C	C/D	D	D/E	E
South Carolina	D	D	D	D/C	C	C	C/B	B	B/C	C/D	D	D
South Dakota	E	E	E/D	D/C	C/B	B	B	B	B	B/C	C/D	D/E
Tennessee	E/D	D	D	D/C	C	C	C/B	B	B/C	C/D	D	D/E
Texas:												
E 99° long.	D	D	D/C	C	B	C/B	B	B	B	B/C	C/D	D
W 99° long.	D	D/C	C/B	B	B/A	A	A	A	A/B	B/C	C/D	D
Utah	E	E/D	D	D/C	C/B	B	B/A	A/B	B	B/C	C/D	D/E
Vermont	E	E	E/D	D	D/C	C	C	C	C/D	D	D/E	E
Virginia	E	E/D	D	D/C	C	C	C	C	C	C/D	D/E	E
Washington:												
E 122° long.	E	E	E/D	D	D/C	C/B	B	B	B/C	C/D	D/E	E
W 122° long.	E	E	E/D	D	D/C	C	C	C	C	C/D	D/E	E
West Virginia	E	E	E/D	D	D/C	C	C	C	C	C/D	D/E	E
Wisconsin	E	E	E/D	D	D/C	C	C	C	C	C/D	D/E	E
Wyoming	E	E	E/D	D/C	C/B	B	B	B	B	B/C	C/D	D/E

1/ Where two classes are given (i.e., A/B, C/D, etc.), this represents a transitional month in that both classes are permitted.

2/ Details of state division by county as indicated:

California, North Coast - Alameda, Contra Costa, Del Norte, Humboldt, Lake, Marin, Mendocino, Monterey, Napa, San Benito, San Francisco, San Mateo, Santa Clara, Santa Cruz, Solano, Sonoma, Trinity.

California, Interior - Alpine, Amador, Butte, Calaveras, Colusa, El Dorado, Fresno, Glenn, Kern (except that portion lying east of the Los Angeles County Aqueduct), Kings, Lassen, Madera, Mariposa, Merced, Modoc, Nevada, Placer, Plumas, Sacremento, San Joaquin, Shasta, Sierra, Siskiyou, Stanislaus, Sutter, Tehama, Tulare, Tuolumne, Yolo, Yuba

California, South Coast - Los Angeles (except that portion north of the San Gabriel Mountain range and east of the Los Angeles County Aqueduct), Orange, San Diego, San Luis Obispo, Santa Barbara, Ventura

California, Southeast - Imperial, Inyo, Kern (that portion lying east of the Los Angeles County Aqueduct), Los Angeles (that portion north of the San Gabriel Mountain range and east of the Los Angeles County Aqueduct), Mono, Riverside, San Bernardino

TABLE VI. Geographical and seasonal distribution of classes for water miscibility.

State	Jan	Feb	Mar	Apr	May	Jun	Jul	Aug	Sept	Oct	Nov	Dec
Alabama	3	3	3	2	1	1	1	1	1	2	3	3
Alaska	5	5	5	3	2	2	1	1	2	3	4	4
Arizona												
N. of 34° Latitude	4	4	3	2	1	1	1	1	2	3	4	4
S. of 34° Latitude	3	3	2	1	1	1	1	1	1	1	2	3
Arkansas	3	3	2	1	1	1	1	1	1	1	2	3
California 1/												
North Coast	3	2	2	1	1	1	1	1	1	1	2	3
South Coast	2	2	2	1	1	1	1	1	1	1	2	2
Interior	3	3	3	2	1	1	1	1	1	2	3	3
Colorado												
E. of 105° Long.	5	4	4	3	2	1	1	1	2	3	4	4
W. of 105° Long.	4	4	4	3	2	1	1	1	2	3	4	4
Connecticut	4	4	3	2	1	1	1	1	1	2	3	4
Delaware	3	3	2	1	1	1	1	1	1	2	3	3
Dist. of Columbia	3	3	3	2	1	1	1	1	1	2	3	3
Florida												
N. of 29° Latitude	3	2	2	1	1	1	1	1	1	1	2	3
S. of 29° Latitude	2	1	1	1	1	1	1	1	1	1	1	2
Georgia	3	3	3	2	1	1	1	1	1	2	3	3
Hawaii	1	1	1	1	1	1	1	1	1	1	1	1
Idaho	4	4	4	3	2	1	1	1	2	3	4	4
Illinois	4	4	4	3	2	1	1	1	1	2	3	4
Indiana	4	4	4	3	2	1	1	1	1	2	3	4
Iowa	4	4	4	3	2	1	1	1	2	3	4	4
Kansas	4	4	4	3	2	1	1	1	2	3	3	4
Kentucky	3	3	3	2	1	1	1	1	1	1	2	3
Louisiana	3	3	2	1	1	1	1	1	1	1	2	3
Maine	4	4	4	3	2	1	1	1	2	3	3	4
Maryland	4	3	3	2	1	1	1	1	1	2	3	3
Massachusetts	4	4	3	2	1	1	1	1	1	2	3	4
Michigan	4	4	4	3	2	1	1	1	1	2	3	4
Minnesota	5	5	4	3	2	1	1	1	2	3	4	5
Mississippi	3	3	2	1	1	1	1	1	1	2	3	3
Missouri	4	4	3	2	1	1	1	1	1	2	3	4
Montana	5	4	4	3	2	1	1	1	2	3	4	4
Nebraska	4	4	4	3	2	1	1	1	2	3	4	4
Nevada												
N. of 38° Latitude	4	4	4	3	2	1	1	1	2	3	4	4
S. of 38° Latutude	3	3	2	1	1	1	1	1	1	1	2	3
New Hampshire	4	4	3	3	2	1	1	1	2	3	3	4
New Jersey	4	4	3	2	1	1	1	1	1	2	3	3
New Mexico												
N. of 34° Latitude	4	4	3	2	1	1	1	1	2	3	4	4
S. of 34° Latitude	3	3	2	1	1	1	1	1	2	3	3	3

TABLE VI. Geographical and seasonal distribution of classes for water miscibility.

State	Jan	Feb	Mar	Apr	May	Jun	Jul	Aug	Sept	Oct	Nov	Dec
New York	4	4	4	3	2	1	1	1	2	3	3	4
North Carolina	3	3	3	2	1	1	1	1	1	2	3	3
North Dakota	5	5	4	3	2	1	1	1	1	2	3	4
Ohio	4	4	3	2	1	1	1	1	2	3	4	5
Oklahoma	4	3	3	2	1	1	1	1	1	2	3	3
Oregon												
E. of 122° Long.	3	3	3	2	1	1	1	1	1	2	3	3
W. of 122° Long.	4	4	3	2	1	1	1	1	2	3	4	4
Pennsylvania												
N. of 41° Long.	4	4	4	3	2	1	1	1	1	2	3	4
S. of 41° Long.	4	4	3	2	1	1	1	1	1	2	3	4
Rhode Island	4	4	3	2	1	1	1	1	1	2	3	4
South Carolina	3	3	3	2	1	1	1	1	1	2	2	3
South Dakota	5	4	4	3	2	1	1	1	2	3	4	4
Tennessee	3	3	3	2	1	1	1	1	1	2	3	3
Texas												
N. of 31° Latitude	4	3	3	2	1	1	1	1	1	2	3	3
S. of 31° Latitude	3	2	2	1	1	1	1	1	1	1	2	3
Utah	4	4	3	2	1	1	1	1	2	3	3	4
Vermont	4	4	4	3	2	1	1	1	2	3	3	4
Virginia	3	3	3	2	1	1	1	1	1	2	3	3
Washington												
E. of 122° Long.	3	3	3	2	1	1	1	1	1	2	3	3
W. of 122° Long.	4	3	3	2	1	1	1	1	2	3	3	4
West Virginia	4	4	3	2	1	1	1	1	2	3	3	4
Wisconsin	5	4	4	3	2	1	1	1	2	3	4	4
Wyoming	4	4	4	3	2	1	1	1	2	3	4	4

1/ California, North Coast - Alameda, Contra Costa, Del Norte, Humbolt, Lake, Marin, Mendocino, Monterey, Napa, San Benito, San Francisco, San Mateo, Santa Clara, Santa Cruz, Solano, Sonoma, Trinity.

California, South Coast - Orange, San Diego, San Luis Obispo, Santa Barbara, Ventura, Los Angeles (except that portion north of the San Gabriel Mountain range and east of the Los Angeles County Aqueduct).

California, Interior - Lassen, Modoc, Plumas, Sierra, Siskiyou, Alpine, Amador, Butte, Calaveras, Colusa, El Dorado, Fresno, Glenn, Kern (except that portion lying east of the Los Angeles County Aqueduct), Kings, Madera, Mariposa, Merced, Placer, Sacramento, San Joaquin, Shasta, Stanislaus, Sutter, Tehama, Tulare, Tuolumne, Yolo, Yuba, Nevada, Imperial, Riverside, San Bernardino, Los Angeles (that portion north of the San Garbriel Mountain range and east of the Los Angeles County Aqueduct), Mono, Inyo, Kern (that portion lying east of the Los Angeles County Aqueduct).

4. QUALITY ASSURANCE PROVISIONS

4.1 Responsibility for inspection. Unless otherwise specified in the contract or purchase order, the contractor is responsible for the performance of all inspection requirements as specified herein. Except as otherwise specified in the contract or order, the contractor may use his own or any other facilities suitable for the performance of inspection requirements specified herein.

4.2 Lot.

4.2.1 Bulk lot. An indefinite quantity of a homogeneous blend of Gasohol of one grade and one class, offered for acceptance in a single, isolated container; or manufactured in a single plant run (not exceeding 24 hours), through the same processing equipment, with no change in the ingredient materials.

4.2.2 Packaged lot. An indefinite number of 55-gallon drums or other unit containers of identical size and type, offered for acceptance and filled with a homogeneous blend of Gasohol of one grade and one class, from a single, isolated container; or filled with a homogeneous blend of Gasohol of one grade and one class, manufactured in a single plant run (not exceeding 24 hours), through the same processing equipment, with no change in the ingredient materials.

4.3 Sampling.

4.3.1 Sampling for the inspection of filled containers. Take a random sample of filled containers from each lot in accordance with MIL-STD-105, at inspection level II and acceptable quality level (AQL) = for 2.5 percent defective.

4.3.2 Sampling for tests. Take samples for test in accordance with ASTM D 270.

4.4 Inspection. Perform inspection in accordance with method 9601 of FED-STD-791.

4.4.1 Examination of filled containers. Examine samples taken in accordance with 4.3.1 for compliance with MIL-STD-290 with regard to fill, closure, sealing, leakage, packaging, packing, and marking requirements. Reject any container having one or more defects or under the required fill. Reject the lot represented by a sample if the number of defective or underfilled containers exceeds the acceptance number for the appropriate sampling plan of MIL-STD-105.

4.5 Classification of tests. All tests are quality conformance tests.

4.6 Test methods. Performs tests in accordance with table VII.

TABLE VII. Test methods.

Test	ASTM Method No.
Ethyl alcohol content	See Appendix, Test Method 1
Other alcohol or ethers	See Appendix, Test Method 5
Distillation	D 86
Existent gum/unwashed gum	D 381
Sulfur	D 1266 or D 2622 1/
Phosphorus	D 3231
Lead content	D 2547, D 2599, D 3116, D 3237 2/ or D 3229
Manganese content 3/	
Corrosiveness	D 130
Oxidation stability	D 525
Water	D 1744 or E 203 4/
Particulate contamination	D 2276
Knock characteristics, research octane method	D 2699
Knock characteristics, motor octane method	D 2700
Knock characteristics, research and motor octane methods using on-line analyzers	D 2885
Water tolerance	See Appendix, Test Methods 2 and 4 5/
Neutralization Number, Acidity	D 1613 or D 3242
Detection of Methyl Alcohol	See Appendix, Test Method 3
Vapor-liquid ratio (V/L)	D 2533 6/
Reid vapor pressures	D323 or D 2551 7/

1/ ASTM D 2622, Sulfur in Petroleum Products (x-ray spectrographic method) may be used as an alternative method for determining sulfur content.

2/ ASTM D 3237, Lead in Gasoline by atomic absorption spectrometry is designated as the referee method, other methods may be used as alternates. D 3237 is the method the Environmental Protection Agency (EPA) has designated for unleaded gasolines.

3/ Manganese will be determined by the method given in the EPA MSAPC Advisory Circular A/C No. 26-B, p 4 or other equivalent methods.

4/ ASTM D1744 is to be used in the determination of water in the Gasohol. ASTM E203 is to be used in the determination of water in the ethanol.

5/ Either method may be used for the determination of water tolerance; however in the event of a discrepancy, Test Method 4 will be used as the referee method.

6/ ASTM D2533 must be modified to use mercury in the leveling bulb in place of glycerin.

7/ ASTM D 2551, Vapor Pressures of Petroleum Products (Micromethod) may be used as an alternative method for determining vapor pressure. ASTM D323 must be modified as described in the ASTM Information Document on Gasohol in the 1981 ASTM Standard Part No. 23.

5. PACKAGING

5.1 Containers and marking. Unless otherwise specified in the contract (see 6.2), containers and marking shall be in accordance with MIL-STD-290.

6. NOTES

6.1 Intended use. Gasohol furnished under this specification is intended for immediate use in all spark-ignition internal-combustion engines and all other equipment designed to operate on gasoline. Gasohol, as well as gasolines procured under VV-G-1960, is not intended for static storage environments. It should not be stored for more than 60 days without replenishment because of possible auto-oxidation and water absorption which can result in deterioration of the overall quality of gasohol.

Based upon recently completed research investigations, satisfactory utilization of gasohol will occur if the following conditions and reservations are adhered to:

a. Gasohol should never be introduced into any above or under ground tankage where water bottoms or sumps are known to exist. This accumulated water will cause extraction of ethyl alcohol and a resultant loss in product.
b. Where gasohol has been inadvertantly contaminated with water and a two phase mixture exists, separation of water with use of standard military designed filter-separators (as is normally done with gasoline, turbine fuel, etc.) is not recommended. Specific instructions can be provided from the US Army Mobility Equipment Research and Development Command, ATTN: DRDME-GL, Fort Belvoir, VA 22060.
c. Where water contamination in gasohol is suspect, microbiological orgainisms may proliferate in those areas where relatively mild or warm ambient temperature exist. To control this growth of micro-organisms, the addition of an approved biocide additive may be required. Specific instruction relative to the biocide addition can be provided from the above mentioned address [see 6.1(b)].
d. Gasohol is not recommended for used in those multifired engines (LD/LDT/LDS-495 series and LDS-427) currently powering the 2-1/2-ton and 5-ton military truck fleet. The addition of ethyl alcohol to gasoline produces an unusually low cetane number which effects startability and creates abnormal combustion problems.

6.1.1 Limited-grade Gasohol. Limited-grade Gasohol is intended for use in 1971 (or later) commercial and administrative vehicles equipped with the lower compression ratio spark-ignition engines designed to operate on a reduced antiknock quality product. This grade may be used in many earlier model vehicles equipped with lower compression engines described above or which have been modified to accommodate this grade (see 1.2.1).

6.1.2 Regular-grade Gasohol. Regular-grade Gasohol is intended for use in spark-ignition engines designed to operate with a product of this antiknock

quality or when so required by equipment manufacturer's recommendations (see 1.2.1). This grade may be required in 1971 or later model vehicles that have antiknock requirements which exceed those of limited grade.

6.1.3 Premium-grade Gasohol. Premium-grade Gasohol is intended for use in spark-ignition engines designed to operate with a product of this antiknock quality or when so required by equipment manufacturer's recommendations (see 1.2.1). This grade may be required in 1971 or later model vehicles that have antiknock requirements which exceed those of limited grade.

6.2 Ordering data. Purchasers should select the preferred options permitted herein and include the following information in procurement documents:

(a) Title, number, and date of this specification.
(b) Grade and classes of Gasohol required (see 1.2 and 3.6).
(c) Quantity of Gasohol required. The unit of purchase is one US gallon (3.785 liters) at 60° F (15.6° C).
(d) Type and size of containers required (see 5.1).
(e) Marking required (see 5.1).
(f) Purity of ethyl alcohol and denaturant used.

6.3 Definitions. The designations "Limited," "Regular," and "Premium" grades apply to gasolines furnished under VV-G-1690 in addition to the Gasohol grades under this specification.

6.3.1 Lead antiknock. Unleaded Gasohol is defined as Gasohol to which the addition of lead antiknock is not permitted. Lead antiknock present shall not exceed that amount which results from contamination when good refinery and distribution practices are followed and shall not exceed 0.013 g/l (0.05 g/gal). Additionally, the phosphorus content of unleaded Gasohol shall not exceed 0.0013 g/l (0.005 g/gal).

Custodians:
Army - ME
Navy - YD
Air Force - 68

Review activities:
Army - MD
Navy - SA, SH, MC
DLA - PS

User activity:
Army - AT

Preparing activity:
Army - ME

Project 9130-0105

APPENDIX

GASOHOL, AUTOMOTIVE, LEADED OR UNLEADED

10. SCOPE

10.1 Scope. The test methods contained within this appendix are to determine the amount of denatured alcohol (ethanol) in Gasohol (Test Method 1), water tolerance of Gasohol (Test Methods 2 and 4), detection of methyl alcohol in Gasohol (Test Method 3) and determining oxygenates in Gasohol (Test Method 5). This appendix is a mandatory part of the specification. The information contained herein is for compliance.

20. APPLICABLE DOCUMENTS

20.1 AMERICAN SOCIETY FOR TESTING AND MATERIALS

ASTM D2500 - Cloud Point of Petroleum Oils

(Application for copies should be addressed to the American Society for Testing and Materials, 1916 Race Street, Philadelphia, PA 19103.)

APPENDIX

TEST METHOD 1

TEST METHOD FOR DETERMINING THE AMOUNT OF DENATURED ETHYL ALCOHOL (ETHANOL) IN GASOHOL

1. SCOPE

1.1 This method is for determining the amount of denatured ethanol in Gasohol. This method is intended to provide a simple and reliable means for determination of the ethyl alcohol content of Gasohol. Quantitative techniques employing gas liquid chromatrography and infrared spectroscopy are currently being developed which will be available shortly.

2. SUMMARY OF METHOD

2.1 A sample of Gasohol is shaken at room temperature with ethylene glycol. The change in volume of the ethylene glycol layer is related to the amount of denatured ethanol in the sample of Gasohol.

3. APPARATUS

3.1 Graduated glass mixing cylinder, glass-stoppered, 100-ml with 1-ml graduations. This must be capable of accepting a total volume of in excess of 110 ml with the stopper in place.

3.2 Pipet, volumetric, 10 ml, type 1, class B.

3.3 Pipet filler or bulb, Koroseal, 30 ml.

4. REAGENTS

4.1 Ethylene glycol, reagent grade with 0.02 g/1000 ml methyl violet dye added (methylene blue or other water soluble dyes may also be used).

4.2 Acetone, commercial grade.

5. PREPARATION OF APPARATUS

5.1 Clean the graduated cylinder thoroughly before carrying out this test as follows.

5.1.1 Remove traces of fuel and ethylene glycol from the graduated cylinder and stopper by flushing twice with acetone and drain dry.

5.1.2 Rinse twice with sample of Gasohol to be tested and drain.

5.2 Clean pipet by filling twice with acetone, drain, and air dry, using the bulb.

APPENDIX

6. PROCEDURE

6.1 Measure 100 ml of Gasohol sample to be tested into the graduated mixing cylinder at room temperature to the nearest 0.2 ml and stopper the cylinder.

6.2 Remove stopper and pipet 10 ml of ethylene glycol into the cylinder and stopper the cylinder. (Caution: Draw ethylene glycol into the pipet using the pipet filler or Koroseal bulb. Do not suck with mouth (see 9.2).

6.3 Invert the cylinder holding the stopper with a finger and shake the cylinder back and forth for 15 seconds using about 10-inch strokes for a total of 25 back and forth strokes.

6.4 Immediately place the cylinder on a vibration-free surface, and allow the contents to settle undisturbed for 5 minutes.

6.5 Record the volume of the ethylene glycol/alcohol layer in the bottom of the cylinder to the nearest 0.2 ml.

7. CALCULATION

7.1 Calculate the volume percentage of denatured ethanol using a previously prepared calibration curve, developed using appropriate mixtures (i.e., 5, 8, 10, 12, 15 and 20 percent) of the specified denatured alcohol and blended into the base gasoline.

8. PRECISION

8.1 Repeatability - Duplicate results by the same operator for Gasohol containing 10 percent denatured ethanol should be considered suspect if they differ by more than 1.0 ml.

9. PRECAUTIONARY STATEMENTS

9.1 Gasohol - Volatile and extremely flammable. Harmful or fatal if swallowed. Keep away from heat, sparks, or open flame. Keep container closed. Use only in well ventilated area. Avoid prolonged or repeated breathing of vapor or contact with skin or eyes. If swallowed, do not induce vomiting. Call a physician immediately.

9.2 Ethylene glycol - Harmful or fatal if swallowed. If swallowed, induce vomiting immediately. Call a physician immediately. Wash thoroughly after handling.

9.3 Acetone - Extremely flammable. May cause eye and skin irritation. Keep away from heat, sparks, or open flame. Keep container closed. Use with adequate ventilation. Avoid prolonged or repeated breathing of vapors. Avoid contact with eyes and skin.

APPENDIX

TEST METHOD 2

TEST METHOD FOR DETERMINING THE
WATER TOLERANCE OF GASOHOL

1. SCOPE

1.1 This method is used to measure the water tolerance of Gasohol.

2. SUMMARY OF METHOD

2.1 Specific amounts of water are added to measured volumes of Gasohol. If a haze appears, the water tolerance of the Gasohol is unacceptable.

3. APPARATUS

3.1 Graduated glass mixing cylinder, glass stoppered, 100 ml.

3.2 Micropipette, 50 ul.

3.3 Micropipette tips, 5-200 ul.

4. REAGENTS

4.1 Distilled water

5. PROCEDURE

5.1 Test is to be conducted at room temperature (approximately 70° F).

5.2 Rinse the 100-ml mixing cylinder and stopper with Gasohol to be tested and drain.

5.3 Fill the cylinder with 100 ml of Gasohol sample.

5.4 Add water using the 50-ul micropipette and disposable tip as follows:

Water Tolerance Class 1/	Minimum Ambient Temp., °F, where Gasohol will be used	Water to add to the Gasohol sample, ul
1	41	150
2	32	200
3	14	250
4	-13	300
5	-40	350

1/ See geographical application table VI.

5.5 Stopper the mixing cylinder and shake sample vigorously for one minute.

6. PRECAUTIONARY STATEMENTS

6.1 See paragraph 9.1 from Test Method 1.

7. REPORT

7.1 If haze persists after one-minute shake, report: FAIL.

7.2 If no haze appears after one-minute shake, report: PASS.

APPENDIX

TEST METHOD 3

FIELD TEST METHOD FOR THE DETECTION OF METHYL ALCOHOL AS AN ADULTERANT IN GASOHOL

1. SCOPE

1.1 This method covers the detection of 1 percent or more of methyl alcohol in Gasohol.

2. SUMMARY OF METHOD

2.1 The test was developed to detect about 1 percent (or more) of methyl alcohol in Gasohol. The sensitivity of the procedure can be increased, but conditions were established to prevent a false conclusion based upon the presence of only a small amount of methyl alcohol. A faint color is a negative test. Under the conditions, no test was observed for gasoline or Gasohol prepared from ethanol. A strong positive test is obtained if the Gasohol contains 1 percent methanol. The temperature of 100° C is recommended as water can be boiled with immersion heaters operating off an automobile battery (cigarette lighter attachment) for field use. The addition of the solid reagents is not critical in amount. If a small excess of chromotropic acid is present (as a precipitate) it does no harm. The test for methanol is well established in the literature and has been adopted for the detection of methyl alcohol in Gasohol.

3. APPARATUS

3.1 Flask, Erlenmeyer, glass-stoppered, 250-ml with graduations.

3.2 Bottles, reagent, narrow mouth, 250-ml with stoppers, 3 each.

3.3 Cylinder, graduated, capacity 100-ml.

3.4 Cylinder, graduated, capacity 10-ml.

3.5 Balance, four beam, Cent-O-Gram Ohaus.

3.6 Plastic transfer pipets, capacity 5-ml, length 5-3/4-inch.

3.7 Test tube, OD 16-mm, length 150-mm.

3.8 Beaker, 250-ml capacity.

3.9 Heater, capable of boiling water.

4. REAGENTS

4.1 Phosphoric acid, 5 percent solution, prepared by diluting 6-ml of concentrated (87 percent) phosphoric acid to 100-ml with water.

APPENDIX

4.2 Potassium permanganate solution, 5 percent prepared by adding 5 g of potassium permanganate to 95 ml water.

4.3 Solid sodium bisulfite ($NaHSO_3$).

4.4 Sulfuric acid, 72 percent solution, prepared by adding 150 ml of concentrated sulfuric acid (98 percent) to 100 ml of water (see 6.2).

4.5 Chromotropic acid (1,8 - dihydroxy napthalene - 3,6 - disulfonic acid).

5. PROCEDURE

5.1 To 100 ml of Gasohol add 50 ml of water into glass stoppered Erlenmeyer, shake and allow to settle.

5.2 Using a medicine dropper or transfer pipet, take a sample of the bottom layer and transfer 3 drops to test tube. Do not use mouth pipeting techniques.

5.3 Add 1-2 drops of the phosphoric acid solution and 1-2 drops of the potassium permanganate solution to the test tube. Shake for 1/2 minute.

5.4 Add a small amount of sodium bisulfite (approximately 100 mg), shake and if the solution is not decolorized, add an additional amount of sodium bisulfite. If a brown precipitate forms, add an additional drop of the phosphoric acid solution to clear the solution.

5.5 Add 4 ml of the sulfuric acid solution and a small amount of solid chromotropic acid (about 50 mg).

5.6 Place the test tube into a beaker of boiling water (or a water bath at 100° C) for 1 minute. An intense blue to purple color is a positive test.

6. PRECAUTIONARY STATEMENTS

6.1 The reagents used in this test method may cause eye and skin irritation, burns, and may be harmful or fatal if swallowed. Keep reagent containers closed. Use only in well ventilated areas. Avoid prolonged or repeated breathing of vapor and contact with skin or eyes.

6.2 Sulfuric acid - use great caution in mixing with water due to heat evolution that causes explosive spattering. Always add the acid to water, never the reverse.

6.3 See Test Method 1, 9.1.

APPENDIX

TEST METHOD 4

TEST METHOD FOR DETERMINING THE WATER TOLERANCE OF GASOHOL, REFEREE METHOD

1. SCOPE

1.1 This method covers the ability for Gasohol to tolerate additions of 0.10 percent volume water without exhibiting any phase separation after being exposed to specified temperatures.

2. SUMMARY OF METHOD

2.1 After addition of 0.10 percent vol water to a 100 ml Gasohol sample, the solution is cooled at a specified rate down to the temperature required. The prescribed cooling rate used is identical to that specified under D 2500, Standard Test Method for Cloud Point of Petroleum Fuels. The temperature at which a "cloud layer", approximately 1 to 1.5 mm in thickness, forms at the bottom of the test jar is interpreted as the "water tolerance or separation point". The minimum temperature specified is based upon the water miscibility classification of the Gasohol samples; i.e., class 1 designed for hot environments has to meet a minimum temperature of 5° C (41° F) whereas class 5 (designed for cold environments) must meet a minimum temperature of -40° C (-40° F).

3. APPARATUS

3.1 Test bottle, clear glass, cylindrical form, flat bottom, 118 to 120 ml capacity, 150 mm in height and 35 mm in diameter. Test bottle must be able to fit into receptacle/jacket of cooling bath apparatus used to determine Cloud Point, D 2500. Test bottle similar to the ones identified in chemical catalogues as Oil Determination Bottle or Oil Sample Bottle.

3.2 Thermometers, having the ranges shown under paragraph 4.2 of D 2500.

3.3 Cork, to fit the test jar, bored centrally to take the test thermometer.

3.4 Cooling bath apparatus, of the types specified under paragraph 4.4 through 4.7 for determining Cloud Point, D 2500.

3.5 Syringe, tuberculin, 1.0 ml capacity.

3.6 Graduated glass cylinder, glass-stoppered, 100-ml, with 1-ml graduations.

4. REAGENTS

4.1 Water, distilled.

5. PROCEDURE

APPENDIX

5.1 Using the syringe, add 0.10 ml distilled water to the 100-ml graduated cylinder. Transfer 99.9 ml of Gasohol to the graduated cylinder so that the total volume is 100.0 ml. Replace with glass stopper and shake thoroughly.

5.2 Transfer the Gasohol solution to the 125-ml tall form sample bottle.

5.3 Close the test bottle tightly by cork carrying the test thermometer (use a thermometer appropriate to the temperature required). Adjust the position of the cork and the thermometer so that the cork fits tightly, the thermometer and the bottle are coaxial, and thermometer bulb is located midway in the Gasohol mixture.

5.4 Following the same cooling rate as prescribed under paragraphs 5.5 through 5.7 of D 2500 for determining Cloud Point with the exception that each test temperature reading should be a multiple of 5° C (18° F), bring the temperature down to that specified.

5.5 At the test temperature, remove the test bottle from the cooling jacket quickly, inspect for the appearance and the "cloud layer" formation at the bottom of the bottle.

5.6 If the inspection reveals a distinct "cloud layer" of approximately 1 to 1.5 mm in thickness, raise the temperature 1° C. If the cloud layer disappears, the sample is acceptable. If the cloud layer persists, the sample is not acceptable.

6. PRECAUTIONARY STATEMENTS

6.1 See paragraph 9.1 from Test Method 1.

7. REPORT

7.1 Report the test temperature recorded in 5.6 as the "water tolerance point". This reported temperature must be no greater than that specified for the water miscibility class to be considered acceptable.

APPENDIX

TEST METHOD 5

TEST METHOD FOR DETERMING OXYGENATES
IN GASOHOL BY GAS CHROMATOGRAPHY

1. Scope

1.1 This method is for determining the amount of methanol, ethanol, isopropyl alcohol, tert-butyl alcohol, and tert-butyl ether in hydrocarbon mixtures.

2. SUMMARY OF METHOD

2.1 A two-column chromatographic system connected to a thermal conductivity detector is used. A reproducible volume of sample is injected into the column containing a polar liquid phase. The light hydrocarbons through methylcyclopentane are vented to the atmosphere as they elute. The column is back flushed immediately after the elution of methylcyclopentane, and the components remaining in the column are directed into the second column containing an active solid. In this column, the oxygenates elute before the remaining hydrocarbons. Immediately after the oxgenates of interest have eluted, the flow through the active solid column is reversed to back flush the remaining hydrocarbons from the column. Quantitative results are obtained from measured areas of the recorded oxygenate peaks by utilizing factors obtained from the analyses of blends of known oxygenate content.

3. APPARATUS

3.1 Gas chromatograph - A gas chromatograph equipped with a dual thermal conductivity detector with provision for installing a valve in the column oven or other heated zone. Provision must also be made, either within the chromatograph or externally, to operate the second column at a higher temperature than the first column and the valve.

3.2 Valve - Eight port rotary or equivalent.

3.3 Integrator - Electronic integration is recommended.

3.4 Recorder - A 1-mV recorder with a 1-rec. full scale response. If electronic integration is not used, a minimum chart width of 250 mm and a minimum chart speed of 1-cm/minute is required.

3.5 Column 1 - A stainless steel column 2.4-m long, 3.5-mm ID (3/16" OD) packed with 80-100 mesh Chromosorb P coated to a 25 wt-percent level with tetracyanoethylated pentaerythritol (TCEPE).

3.6 Column 2 - A stainless steel column 4.6-m long, 3.5-mm ID (3/16" OD) packed with 80-100 mesh Porapak P.

APPENDIX

4. REAGENTS AND MATERIALS

4.1 Carrier gas - Chromatographic grade helium (hydrogen should be tried before the method is finalized).

4.2 Pure compounds for calibration - shall include methanol, ethanol, isopropyl alcohol, tert-butyl alcohol, methyl tert-butyl ether, methylcyclopentane and toluene. The purity of all the reagents shall be 99 percent or greater.

5. PREPARATION OF APPRARATUS

5.1 Install the valve and the columns as shown in figure 1.

5.2 Column 2 is placed in a separate heated zone. Any necessary connecting lines should be of minimum diameter and length and should be heated.

5.3 The restrictor shown is optional and is used to reduce baseline disruption when the position of the valve is changed. It consists of a short length of 0.25-mm ID stainless steel capillary tubing and approximates the restriction of column 2.

5.4 Establish the instrument parameters shown in table 1.

TABLE I. Operating conditions.

Carrier gas	helium
Carrier gas flow rate	60 mL/minute
Detector type	thermal conductivity
Detector temperature	200 C
Injection port temperature	170 C
Column 1 temperature	115 C isothermal
Valve temperature	115 C
Column 2 temperature	170 C isothermal
Sample size	2.5 ul (reproducible)

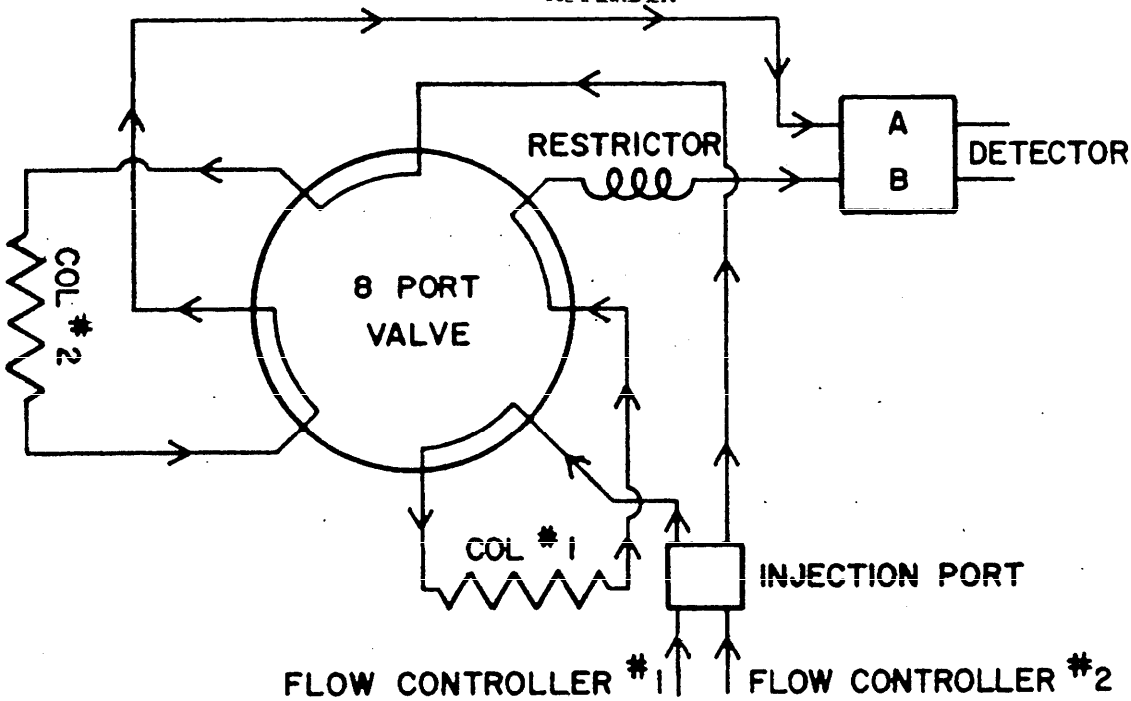

INJECT POSITION

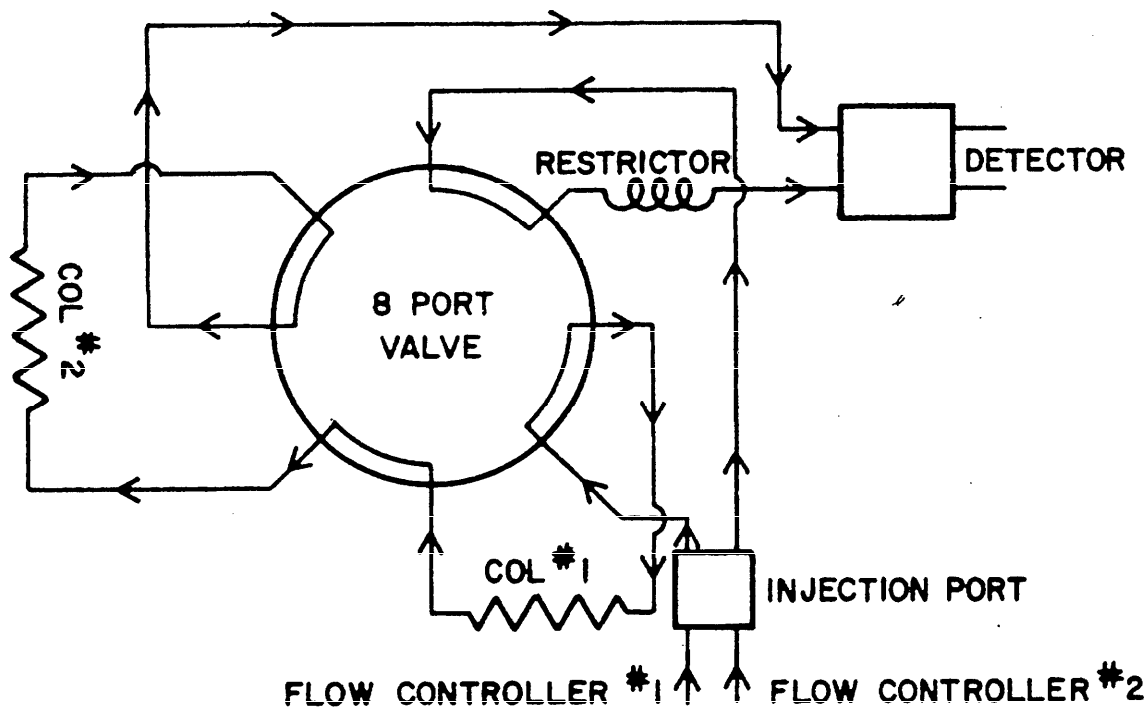

ANALYZE POSITION

FIGURE 1. Eight port valve

X-4055

6. CALIBRATION

6.1 Prepare, by precise weighing, a calibration blend of oxygenates in toluene at levels approximating those in the samples to be analyzed. This blend should also contain 10 percent methylcyclopentane. Using densities, convert the calculated weight-percent to liquid volume-percent.

6.2 Chromatograph this blend with the valve in the inject position with the detector on polarity "B". Determine the time in seconds at which methylcyclopentane has completely eluted. Call this time T1.

6.3 Chromatograph the blend with the detector on polarity "A". At time T1 switch the valve to the analyse position. When the last oxygenate of interest has eluted, switch the valve to the inject position. Call this time T2. See figure 2.

6.3.1 Referring to figure 2, acetone elutes at the isopropyl alcohol site, n-propyl alcohol elutes between tert-butyl alcohol and methyl tert-butyl ether. Sec-butyl alcohol and n-butyl alcohol elute separately after methyl tert-butyl ether, but hydrocarbons begin to elute in this region and may prevent quantitation.

6.4 Measure the areas of the oxygenates. Calculate the response factor (volume-percent per unit of area) for each of these components from the following formula:

$$F = \frac{L}{A}$$

Where:

A = peak area of the component

F = response factor of the component

L = concentration of the component, liquid volume-percent

6.5 Calculate the response factor to at least three significant figures.

6.6 The blend prepared in 6.1 above contains very volatile components and may not be stable for an extended period. Because of this, an alternative calibration procedure may be used.

6.6.1 Prepare and analyze the blend as described in 6.1 to 6.5. Use the response factors (F) to determine the response of each oxygenate relative to tert-butyl alcohol as follows:

$$R_C = \frac{F_C}{T}$$

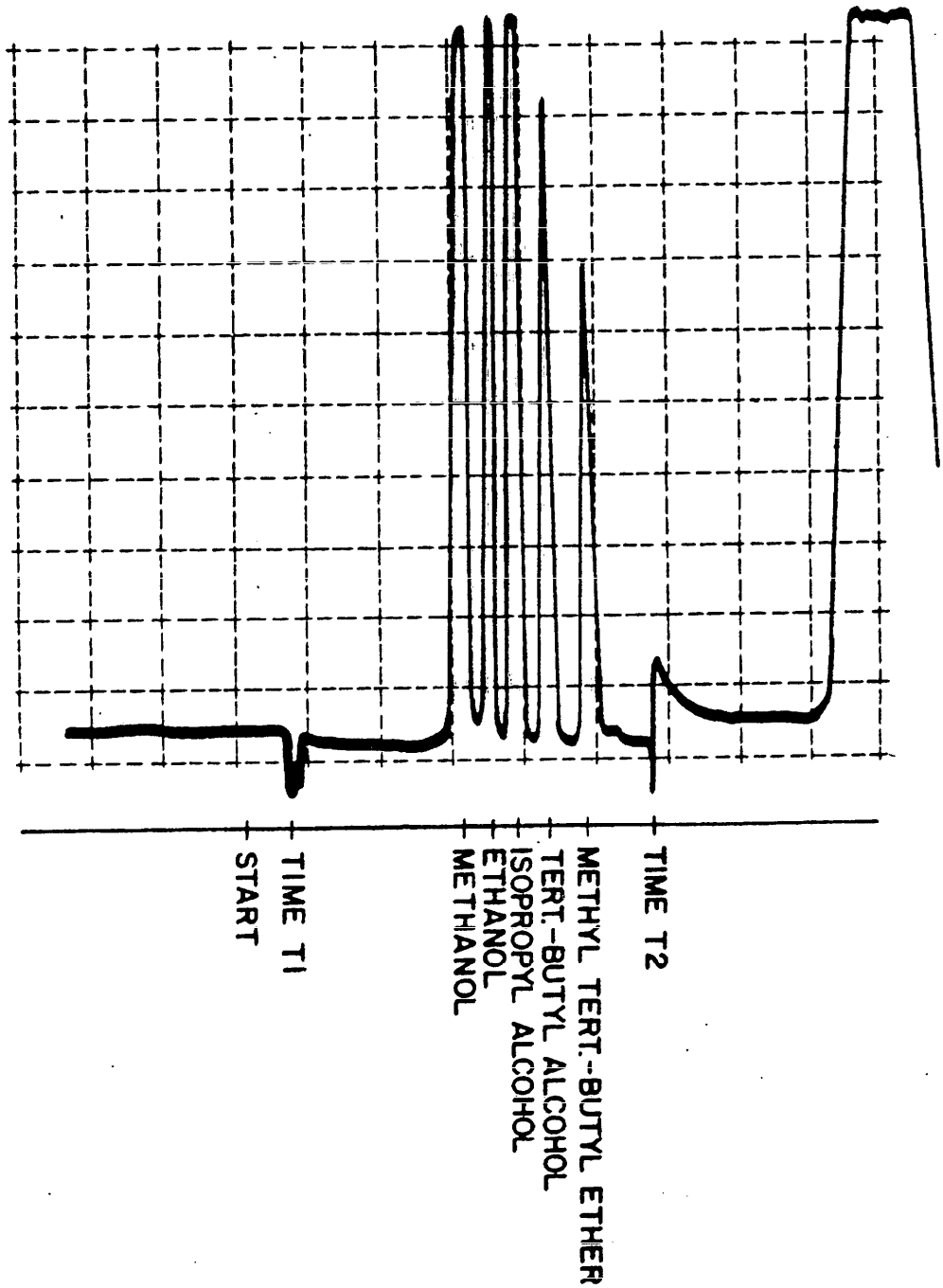

FIGURE 2. Oxygenate spectrograph

X-4056

Where:

F_c = response factor for an oxygenate

R_c = relative response of that component

T = relative response of tert-butyl alcohol

6.6.2 Prepare a blend (Blend 2) containing tert-butyl alcohol in toluene as described in 6.1. Use this blend as the daily calibration blend, determining response factors for the other oxygenates as follows:

$$F_d = F_t R_c$$

Where:

F_d = daily response factor for each oxygenate

F_t = response factor for tert-butyl alcohol from Blend 2, calculated as described in 6.4

R_c = relative response of the individual oxygenate, previously determined in 6.6.1

6.6.3 Redetermine relative response factors monthly or after any apparatus change by preparing a new blend as described in 6.1

7. Procedure

7.1 Chromatograph the samples using the technique described for the blend in 6.3. The volume of sample injected must be exactly the same as the volume of blend injected.

7.2 Measure the areas of the exygenates. Unites must be consistent with 6.4 above.

8. CALCULATION

8.1 Calculate the liquid volume-percent (LV-percent) of each exygenate present in the sample using the following equation:

Component, LV-percent - FC

Where:

C = peak area for that component

F = response factor, previously defined (F_d if the alternative calibration is used)

8.2 Report the concentration of the individual oxygenates on an absolute basis to the nearest 0.1 percent.

9. PRECAUTIONS

9.1 This standard may involve the use of hazardous materials, operations and equipment. It is the responsibility of whoever used this standard to establish appropriate safety practices and to determine the applicablitity of regulatory limitations prior to use.

STANDARDIZATION DOCUMENT IMPROVEMENT PROPOSAL

INSTRUCTIONS: This form is provided to solicit beneficial comments which may improve this document and enhance its use. DoD contractors, government activities, manufacturers, vendors, or other prospective users of the document are invited to submit comments to the government. Fold on lines on reverse side, staple in corner, and send to preparing activity. Attach any pertinent data which may be of use in improving this document. If there are additional papers, attach to form and place both in an envelope addressed to preparing activity. A response will be provided to the submitter, when name and address is provided, within 30 days indicating that the 1426 was received and when any appropriate action on it will be completed.

NOTE: This form shall not be used to submit requests for waivers, deviations or clarification of specification requirements on current contracts. Comments submitted on this form do not constitute or imply authorization to waive any portion of the referenced document(s) or to amend contractual requirements.

DOCUMENT IDENTIFIER *(Number)* AND TITLE

MIL-G-53006 Gasohol, Automotive, Leaded or Unleaded

NAME OF ORGANIZATION AND ADDRESS OF SUBMITTER

☐ VENDOR ☐ USER ☐ MANUFACTURER

1. ☐ HAS ANY PART OF THE DOCUMENT CREATED PROBLEMS OR REQUIRED INTERPRETATION IN PROCUREMENT USE? ☐ IS ANY PART OF IT TOO RIGID, RESTRICTIVE, LOOSE OR AMBIGUOUS? PLEASE EXPLAIN BELOW.

A. GIVE PARAGRAPH NUMBER AND WORDING

B. RECOMMENDED WORDING CHANGE

C. REASON FOR RECOMMENDED CHANGE(S)

2. REMARKS

SUBMITTED BY *(Printed or typed name and address — Optional)*

TELEPHONE NO.

DATE

DD FORM 1 OCT 76 1426

EDITION OF 1 JAN 72 WILL BE USED UNTIL EXHAUSTED.

FOLD

DEPARTMENT OF THE ARMY

OFFICIAL BUSINESS
PENALTY FOR PRIVATE USE $300

NO POST
NECESSA
IF MAIL
IN TH
UNITED ST

BUSINESS REPLY CARD

FIRST CLASS PERMIT NO. 12062 WASHINGTON D. C.

POSTAGE WILL BE PAID BY THE DEPARTMENT OF THE ARMY

Commander
US Army Mobility Equipment Research and
Development Command
ATTN: DRDME-DS
Fort Belvoir, VA 22060

FOLD