Downloaded from http://www.everyspec.com

| NOT MEASUREMENT SENSITIVE |

MIL-G-28554C
AMENDMENT 1
1 April 1991

MILITARY SPECIFICATION

GENERATOR SETS, MOBILE ELECTRIC POWER AND SUPPLEMENTAL EQUIPMENT; PACKAGING OF

This amendment forms a part of MIL-G-28554C, dated 17 November 1988, and is approved for use by all Departments and Agencies of the Department of Defense.

The attached insertable replacement pages listed below are replacements for stipulated pages. When the new pages have been entered in the document, insert the amendment as the cover sheet to the specification.

Replacement page	Page replaced
23	Reprinted without change
24	Added
25	Added
26	Added

Beneficial comments (recommendations, additions, deletions) and any pertinent data which may be of use in improving this document should be addressed to: Commanding Officer (Code 156), Naval Construction Battalion Center, Port Hueneme, CA 93043-5000, by using the self-addressed Standardization Document Improvement Proposal (DD Form 1426) appearing at the end of this document or by letter.

AMSC N/A FSC PACK

DISTRIBUTION STATEMENT A. Approved for public release; distribution is unlimited.

Downloaded from http://www.everyspec.com

6.7 Fuel systems. When shipping generator sets by military aircraft, the fuel system of gasoline, diesel and gas turbine engines should be drained and purged as specified in AFM 71-4, DSAM 4145.3, TM 38-250, NAVSUP PUB 505, and MCO 4030.19. Additional information for draining and purging fuel tanks is contained in MIL-HDBK-758, T.O. 35-1-4, and T.O. 38-1-5.

6.8 Environmental pollution preventive. Disposal methods of packaging materials, to prevent environmental pollution, are contained in MIL-HDBK-742, the material specification, or may be obtained from the preparing activity of the applicable material specification.

6.9 Subject term (key word) listing.

Electrolyte
Generator
Marking
Packing
Preservation

6.10 Changes from previous issue. Marginal notations are not used in this revision to identify changes with respect to the previous issue due to the extensiveness of the changes.

Custodians:

Navy - YD
Army - ME
Air Force - 69

Review Activities:

Army - ME, SM, MI, GL
Navy - SA, OS, MC
Air Force - 71, 80
DLA - CS

User Activities:

Navy - SH

Preparing Activity:

Navy - YD

(Project PACK-0942)

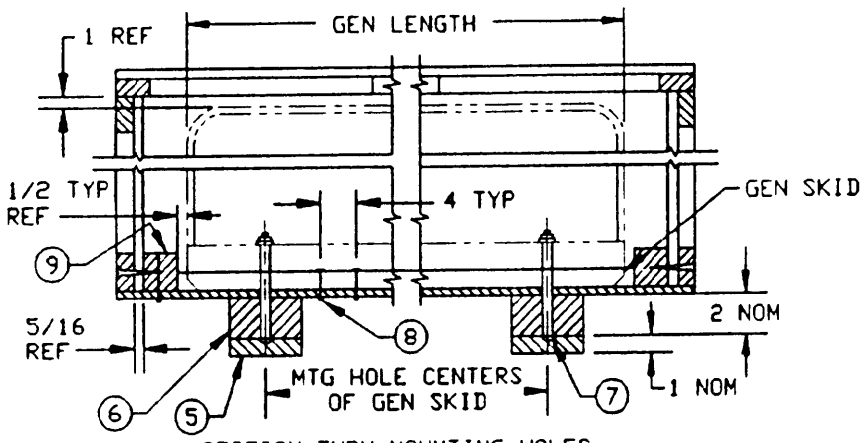

SECTION THRU MOUNTING HOLES

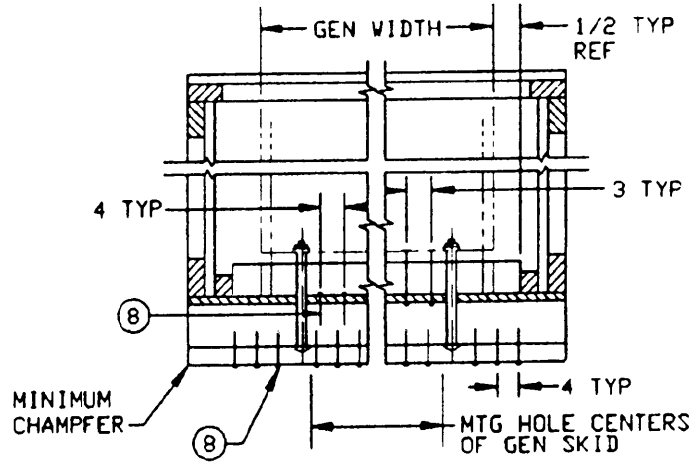

SECTION "X-X"

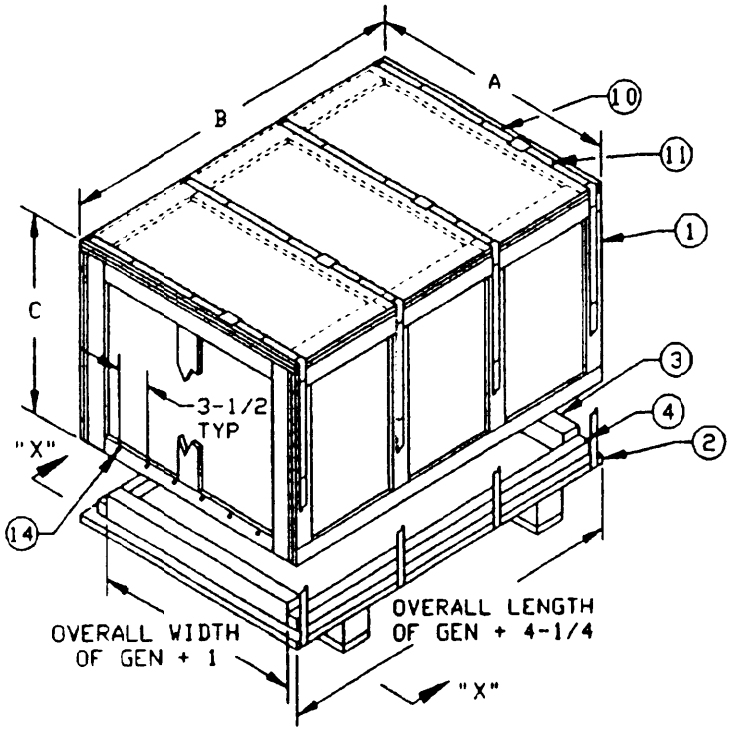

GENERATOR WEIGHT LBS	A OVERALL WIDTH OF PALLET, CAP AND LENGTH OF SKID	B OVERALL LENGTH OF PALLET AND CAP	C OVERALL HEIGHT OF CAP
275 - 600	OVERALL WIDTH OF GEN + 4-3/4	OVERALL LENGTH OF GEN + 6-1/2	OVERALL HEIGHT OF GEN + 2-1/8
601 - 1000	OVERALL WIDTH OF GEN + 4-7/8	OVERALL LENGTH OF GEN + 6-5/8	OVERALL HEIGHT OF GEN + 2-3/16

NOTES:

1. Intermediate cleats: 10 kw sets will require two intermediate cleats on sides and top and one on each end; 5 kw, one each side, top and end; 3 kw, one each side and top.

FIGURE 1. Level A packing (3, 5, and 10 kw generator sets).

Downloaded from http://www.everyspec.com

Downloaded from http://www.everyspec.com

FIND NO.		QUANTITY LEVEL A	B	C
1	CAP, FABRICATED IN ACCORDANCE WITH PPP-B-601, OVERSEAS TYPE, STYLE A, LOAD TYPE 2, WITHOUT BOTTOM.	1		
1	CAP, WEATHER RESISTANT, PPP-B-640, CL 2, STYLE E, WITHOUT BOTTOM.		1	1
2	BASE, PALLET, PLYWOOD, NN-P-530, GROUP A (CS-51, TYPE I, GRADE 3-4) OR GROUP B (PS-1, TYPE EXTERIOR, GRADE C-D), (SEE NOTE 3).	1	1	1
3	STRIP, LUMBER, MIL-STD-731, CL 2, 2 X 2 NOMINAL SIZE (SEE NOTE 4).	2	2	2
4	STRIP, LUMBER, MIL-STD-731, 1 X 1 NOMINAL SIZE.	2		
5	STRIP, RUBBING, LUMBER, MIL-STD-731, CL 2, 1 X 4 NOMINAL SIZE (SEE NOTE 2).	2	2	2
6	SKID, LUMBER, MIL-STD-731, CL 2, 2 X 4 NOMINAL SIZE (SEE NOTE 2).	2	2	2
7	BOLT, CARRIAGE, LENGTH TO SUIT WITH SELF-LOCKING NUT AND WASHER (SEE NOTE 5 FOR DIAMETER).	4	4	4
8	NAIL, BOX, CEMENT COATED 4d, TO BE CLINCHED WHEN DRIVEN THROUGH.	AR	AR	AR
9	NAIL, BOX, CEMENT COATED 7d, TO BE CLINCHED WHEN DRIVEN THROUGH.	AR	AR	AR
10	STRAP, QQ-S-781, TYPE I OR IV, FINISH B, 3/4 X .020 THICK AND SEALS (SEE NOTE 6).	AR		
10	STRAP, QQ-S-781, TYPE I OR IV, FINISH A OR B, 3/4 X .020 THICK AND SEALS (SEE NOTE 6).		AR	AR
11	STAPLES, PPP-B-601 PARAGRAPH 30.4	AR		
12	NAIL, ROOFING, GALVANIZED, 1/2 DIA. HD X 1-1/4 LG.		AR	AR
13	TAPE 3 INCH WIDE, PPT-T-60, TYPE IV, ENDS, TOP AND MANUFACTURES JOINT.		AR	
14	WOOD SCREW, NO. 12 X 2-1/4 LG. PHOSPHATE COATED, FLAT HEAD	AR		

NOTES:

1 ALL DIMENSIONS ARE IN INCHES.
2 FIND NOS. 5 & 6 MAY BE COMBINED AS ONE PIECE 2-1/4 INCH MINIMUM THICKNESS.
3 USE 1/2 INCH PLYWOOD BASE FOR 3 & 5 KW GENERATORS; USE 3/4 INCH FOR 10 KW.
4 FIND NO. 3 EXTENDS BEYOND WIDTH OF GENERATOR SKID FOR LEVEL A, BUT IS BETWEEN GENERATOR SKID FOR LEVELS B AND C.
5 BOLT DIAMETERS: 1/2 INCH FOR 3 & 5 KW GENERATORS; 5/8 INCH FOR 10 KW.
6 FOUR GIRTHWISE STRAPS FOR 10 KW GENERATORS, THREE FOR 3 & 5 KW.

FIGURE 2. Bill of materials.

Downloaded from http://www.everyspec.com

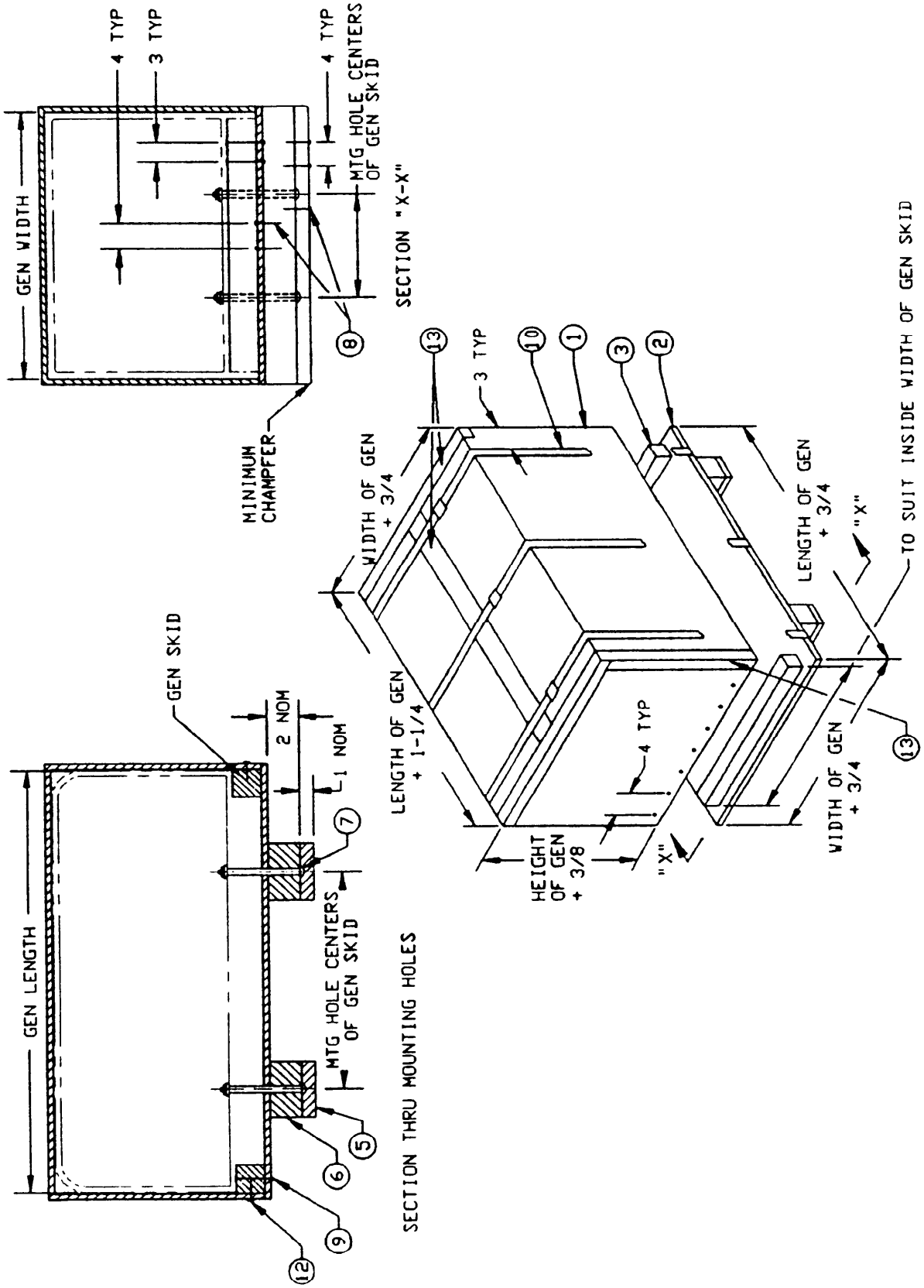

FIGURE 3. Level B and C packing (3, 5, and 10 kw generator sets).

Downloaded from http://www.everyspec.com

STANDARDIZATION DOCUMENT IMPROVEMENT PROPOSAL

INSTRUCTIONS

1. The preparing activity must complete blocks 1, 2, 3, and 8. In block 1, both the document number and revision letter should be given.
2. The submitter of this form must complete blocks 4, 5, 6, and 7.
3. The preparing activity must provide a reply within 30 days from receipt of the form.

NOTE: This form may not be used to request copies of documents, nor to request waivers, or clarification of requirements on current contracts. Comments submitted on this form do not constitute or imply authorization to waive any portion of the referenced document(s) or to amend contractual requirements.

I RECOMMEND A CHANGE:	1. DOCUMENT NUMBER	2. DOCUMENT DATE (YYMMDD)
3. DOCUMENT TITLE		

4. NATURE OF CHANGE (*Identify paragraph number and include proposed rewrite, if possible. Attach extra sheets as needed.*)

5. REASON FOR RECOMMENDATION

6. SUBMITTER

a. NAME (*Last, First, Middle Initial*)	b. ORGANIZATION	
c. ADDRESS (*Include Zip Code*)	d. TELEPHONE (*Include Area Code*) (1) Commercial (2) AUTOVON (*If applicable*)	7. DATE SUBMITTED (YYMMDD)

8. PREPARING ACTIVITY

a. NAME	b. TELEPHONE (*Include Area Code*) (1) Commercial: (805) 982- (2) AUTOVON: 551-
c. ADDRESS (*Include Zip Code*) Commanding Officer (156) Naval Construction Battalion Center Port Hueneme, CA 93043-5000	IF YOU DO NOT RECEIVE A REPLY WITHIN 45 DAYS, CONTACT: Defense Quality and Standardization Office 5203 Leesburg Pike, Suite 1403, Falls Church, VA 22041-3466 Telephone (703) 756-2340 AUTOVON 289-2340