MIL-F-83142A(USAF)
1 December 1969

Superseding
MIL-F-83142(USAF)
11 February 1969

MILITARY SPECIFICATION

FORGING, TITANIUM ALLOYS, PREMIUM QUALITY

1. SCOPE

1.1 Scope. This specification covers unalloyed titanium and titanium alloy forgings suitable for aircraft and aerospace components.

1.2 Classification. The titanium and titanium alloy forgings shall be of the following composition, as specified (see 6.3):

Alpha Alloys

Composition 1 - Unalloyed
Composition 2 - 5Al-2.5Sn
Composition 3 - 5Al-2.5Sn ELI
Composition 4 - 5Al-5Zr-5Sn
Composition 5 - 8Al-1Mo-1V

Alpha Beta Alloys

Composition 6 - 6Al-4V
Composition 7 - 6Al-4V ELI
Composition 8 - 6Al-6V-2SN
Composition 9 - 7Al-4Mo
Composition 10 - 11Sn-5Zr-2Al-1Mo
Composition 11 - 6Al-2Sn-4Zr-2Mo

Beta Alloys

Composition 12 - 13V-11Cr-3Al
Composition 13 - 11.5Mo-6Zr-4.5Sn

1.3 Condition. Forgings shall be supplied in the following conditions as specified (6.4):

Condition F	-	As forged
Condition A	-	Annealed
Condition ST	-	Solution heat treated
Condition STA	-	Solution heat treated and aged
Condition DA	-	Duplex annealed

2. APPLICABLE DOCUMENTS

2.1 The following documents, of the issue in effect on date of invitation of bids or request for proposal, form a part of this specification to the extent specified herein.

SPECIFICATIONS

Military

MIL-I-6866	Inspection, Penetrant Method of
MIL-I-8950	Inspection, Ultrasonic, Wrought Metals, Process for
MIL-T-9047	Titanium and Titanium Alloy Bars and Forging Stock
MIL-H-81200	Heat Treatment of Titanium and Titanium Alloys

STANDARDS

Military

MIL-STD-412	Alloy Designation System for Titanium

(Copies of specifications, standards, drawings, and publications required by suppliers in connection with specific procurement functions should be obtained from the procuring activity or as directed by the contracting officer.)

2.2 Other publications. The following documents form a part of this specification to the extent specified herein. Unless otherwise indicated, the issue in effect on date of invitation for bids or request for proposal shall apply.

American Society for Testing and Materials

ASTM E8-66 Tension Testing of Metallic Materials
ASTM E112-63 Estimating the Average Grain Size of Metals

(Application for copies of ASTM standards should be addressed to the American Society of Testing and Materials, 1916 Race Street, Philadelphia, Pennsylvania 19103).

Society of Autmotive Engineers, Incorporated

AMS 2808 Identification - Forgings

(Application for copies of Aerospace Materials specifications should be addressed to the Society of Automotive Engineers, Inc., Two Pennsylvania Plaza, New York, New York 10001).

3. REQUIREMENTS

3.1 First article. Before production has commenced, reports of mechanical and metallurgical tests (4.2.1) of the first item tested to confirm the forging technique shall be made available to the contracting officer or his authorized representative for approval. The approval of the first article sample authorizes the commencement of production but does not relieve the supplier of responsibility for compliance with all applicable provisions of this specification.

3.2 Design documentation. Forging drawings shall indicate: (a) configuration and dimensions of the finished forging, (b) location and dimensions of the part to be produced from the forging, (c) locations and directions of major load paths in each part, (d) alloy composition to be used, (e) location from which specimens shall be cut for first-article tests, (f) final heat treatment, (g) whether forging flash formation is permissible and if so, (h) permissible location(s).

3.2.1 Flash formation (at parting lines). Forgings shall be so designed that whenever optimum properties are assumed by design, flash lines do not extend across major load paths.

3.2.2 Pressurized members. Section of forging (s) intended to be used as internally pressurized member(s) or chamber(s) in the finished part, shall be forged by a hollow forging process, without flash.

3.2.3 Surface contamination control. The forging drawing shall dimensionally define the limits for the contamination-free, forged, heat treated end-product, meeting all the requirements of this specification. At the same time it shall provide excess metal volumes sufficient to assure that no contaminated zones remain after removal of excess metal. Surface protective coatings shall be used to prevent contamination at temperature. The forging sequence shall be selected and the time at temperatures above 1000°F shall be limited so that the depth of diffusion by contaminants, tested in accordance with 4.5.2, shall not exceed 1/16 inch. The difference in hardness between machined surface and core material shall not exceed 40 Vickers Pyramid Hardness numbers. After forging, all contaminated or embrittled metal shall be removed from all forged surfaces. Metal removal shall in all cases exceed 0.065 inch.

3.3 Forging stock. Forging stock in the form of as-cast ingots, billets, or bars may be used at the discretion of the forging vendor provided that, subsequent to the selection of stock and forging technique, and confirmation by tests of a forged shape, no significant change in size, shape, form, or grain flow orientation of forging stock is made during the production of the respective forging without prior notification of the forging user and confirmation of the proposed changes by retest of first article forgings (4.2.1).

3.3.1 Billet stock. Billets and bar stock composition, structure, and properties shall conform to the requirement of MIL-T-9047 for the respective alloy classification in the annealed condition.

3.3.2 Cast ingots. When cast ingots are used as forging stock, thermal cycling above and below the beta transus shall be combined with warm working to produce a uniform and completely wrought structure throughout. Composition of castings shall conform to MIL-T-9047, as specified. Reforging bars and billets shall be procured to MIL-T-9047.

3.4 Forging processing. Forgings shall be hot-formed to the specified configuration and dimensions by hammer, press, ring roll, extrusion, or high-energy-rate forming (HERF) processes. Sufficient hot working shall be applied to the material to insure a uniform particle size and uniform wrought structure throughout the forged shape. Forgings shall be free from dead or insufficiently worked zones. Uniform grain structures shall vary not more than plus or minus two alpha particle sizes as defined by ASTM grain size standards.

3.4.1 Forging flow pattern. The process selected shall produce an internal grain flow pattern so that the direction of flow in stressed areas shall be generally parallel to the applied load paths principal stresses. The pattern shall be free from sharply folded forging flow lines.

3.4.2 Structure. All prior beta grain boundaries shall be broken up in the forging process. In alpha beta forging the structure shall consist of equiaxed primary alpha in a transformed beta matrix. Grain boundaries in the forged structure shall not exhibit more than 25 percent prior grain boundaries.

3.4.2.1 Alpha beta forged. The aggregate area of equiaxed primary alpha particles in any section shall be in the range from 15 to 45 percent after heat treatment. Equiaxed alpha particle sizes shall not exceed grain size 3 (see E112-63). Elongated alpha structure shall not exceed 0.008 inch in the longest dimension. Prior beta grains shall not be surrounded by a continuous alpha network.

3.4.2.2 Beta forged. The grain size of beta and beta forged alloys shall be grain size 2 or finer (see E112-63). In the case of elongated transformed structures, individual grains shall not exceed 0.008 inch in the longest dimension.

3.5 Heat treatment. Forgings of alpha beta and beta alloys ordered in the as-forged condition shall be capable of meeting the requirements of table I after solution heat treatment and aging or the requirements of table II after annealing. Forgings ordered annealed shall conform to the requirements of table II as received and forgings of alpha beta and beta materials shall be capable of meeting the requirements of table I after solution heat treatment and aging. Forgings ordered solution heat treated shall be capable of meeting the requirements of table I as received. Heat treatment shall be performed on the entire forging, not on a localized area. All heat treatments shall be in accordance with the requirements of MIL-H-81200.

3.6 Ultrasonic quality. When tested as specified in 4.5.5, sections less than 3 inches in thickness shall meet AA classification standards and sections 3 inches and over shall comply with class A standards.

TABLE I. Mechanical Properties of Heat Treated Forgings (Transverse)

Material Composition Designator	Section as Heat Treated (Inches)		Strength		Elong % Min	Reduction of Area, % Minimum	
	Thickness	Width	Tensile KSI (Min)	Yield KSI (Min)		Average	Single Test Value
Comp 2 (5Al-2.5Sn)							
Longitudinal	All	All	120	115	10	-	25
Long Tranverse	All	All	120	115	7	-	18
Short Tranverse	All	All	120	115	5	-	15
Comp 4(5Al-5Zr-5Sn)	Up to 2	-	150	140	10	20	20
	Over 2 to 4	-	145	135	10	20	20
Comp 6 (6Al-4V)	Up to 1/2	Under 8	160	150	10	15	12
	Over 1/2 to 1	4 and less	155	145	10	15	12
	Over 1/2 to 1	Over 4 to 8	150	140	10	15	12
	Over 1 to 1-1/2	4 and less	150	140	10	15	12
	Over 1 to 1-1/2	Over 4 to 8	145	135	10	15	12
	Over 1-1/2 to 2	4 and less	145	135	10	15	12
	Over 1-1/2 to 2	Over 4 to 8	140	130	10	15	12
	Over 2 to 3	8 and less	135	125	8	15	10
	Over 3 to 4	8 and less	130	120	6	15	8
Comp 7 (6Al-4V ELI)	Up to 1/2	Under 8	150	140	12	-	20
	Over 1/2 to 1	4 and less	145	135	12	-	20
	Over 1/2 to 1	Over 4 to 8	140	130	12	-	20
	Over 1 to 1-1/2	4 and less	140	130	12	-	20
	Over 1 to 1-1/2	Over 4 to 8	135	125	12	-	20
	Over 1-1/2 to 2	4 and less	135	125	12	-	20
	Over 1-1/2 to 2	Over 4 to 8	130	120	12	-	20
	Over 2 to 3	8 and less	125	115	10	-	18
	Over 3 to 4	8 and less	120	110	8	-	16
Comp 8 (6Al-6V-2Sn)	1 and less	-	180	170	6	15	12
	Over 1 to 2	-	170	160	6	15	12
	Over 2 to 3	-	155	145	6	15	12
	Over 3 to 4	-	150	140	6	15	12
Comp 9 (7Al-4Mo)	1 and less	-	170	160	8	20	16
	Over 1 to 2	-	160	150	8	20	16
	Over 2 to 4	-	150	140	8	20	16
Comp 10 (11Sn-5Zr-2Al-1Mo)	1 and less	-	160	135	12	25	25
	Over 1 to 2	-	155	130	12	25	25
	Over 2 to 3	-	145	120	12	3	25
Comp 11 (6Al-2Sn-4Zr-2Mo)	1 and less	-	150	138	10	-	-
Comp 12 (13V-11Cr-3Al	2 and less	-	170	160	4	10	8
	Over 2 to 7	-	170	160	2	10	6
Comp 13 (11.5Mo-6Zr-4.5Sn)	1-5/8 and under	-	180	175	8	22	22
	Over 1-5/8 to 3.0	-	180	170	4	10	10

TABLE II. Mechanical Properties, Annealed Condition 1/

COMPOSITION	STRENGTH		ELONGATION IN 4D (minimum %)	REDUCTION IN AREA (minimum %)
	TENSILE	YIELD 0.2% OFFSET 2/		
	(minimum PSI)			
Alpha Alloys				
Composition 1 (unalloyed)	80,000	70,000	15	30
Composition 2 (5Al-2.5Sn)	115,000	110,000	12	30
Composition 3 (5Al-2.5Sn ELI)	100,000	90,000	10	25
Composition 4 (5Al-5Zr-5Sn)				
Up to 2 inches	120,000	110,000	10	25
Over 2.0 to 4.0 inches	110,000	100,000	10	20
Composition 5 (8Al-1Mo-1V)	130,000	120,000	10	25
Alpha Beta Alloys				
Composition 6 (6Al-4V)	130,000	120,000	10	25
Composition 7 (6Al-4V ELI)				
Up to 1.75 inches nominal thickness	125,000	115,000	10	25
Over 1.75 to 4.0 inches	120,000	110,000	10	27
Composition 8 (6Al-6V-2Sn)	140,000	130,000	8	20
Composition 9 (7Al-4Mo)	145,000	135,000	10	20
Composition 10 (11Sn-5Zr-2Al-1Mo)	135,000	125,000	11	25
Composition 11 (6Al-2Sn-4Zr-2Mo)	130,000	120,000	10	25
Beta Alloys				
Composition 12 (13V-11Cr-3Al)	130,000	120,000	10	25
Composition 13 (11.5Mo-6Zr-4.5Sn)	130,000	120,000	10	25

1/ Forgings shall be capable of meeting the mechanical property requirements after being heated to any temperature up to 1,200°F for approximately 30 minutes in air and then cooled in air.

2/ The rate of strain shall be 0.003 to 0.007 inch per inch per minute through the yield strength, and then is increased so as to produce failure in approximately 1 additional minute. In case of dispute, a strain of 0.005 shall be used.

3.7 Removal of surface contamination. All forgings shall be thoroughly cleaned and surface contaminated zones removed prior to delivery. Ferrous materials shall not be used for cleaning forgings unless subsequent cleaning operations remove imbedded ferrous particles.

3.8 Metal removal. When metal removal by flame cutting or other thermal means are used during the production of a forging, all heat damaged material (not less than ¼ inch) shall be removed from flame-cut areas by machining. In no case shall flame cutting or metal removal by thermal means be permitted after the forging has received its final thermal treatment or final nondestructive test.

3.9 Welding. The use of welding to achieve the forging configuration is prohibited.

3.10 Identification of product. Forging stock shall be identified in accordance with MIL-STD-412. Forgings shall be marked in accordance with AMS 2808 and, in addition, with this specification number, the heat, composition, and condition.

3.11 Workmanship. Forgings shall be uniform in quality and condition, clean, sound, free from voids, bursts, folds, laps, contaminated material, unmelted sponge, or other defects detrimental to fabrication or to performance of parts.

4. QUALITY ASSURANCE PROVISION

4.1 Responsibility for inspection. Unless otherwise specified in the contract or purchase order, the supplier is responsible for the performance of all inspection requirements as specified herein. Except as otherwise specified in the contract or order, the supplier may use his own or any other facilities suitable for the performance of the inspection requirements specified herein, unless disapproved by the Government. The Government reserves the right to perform any of the inspections set forth in the specification where such inspections are deemed necessary to assure supplies and services conform to prescribed requirements.

4.2 Classification of inspections. The inspection and testing of the forgings shall be classified as follows:

a. First article inspection (see 4.2.1)

b. Quality conformance inspection (see 4.2.2).

4.2.1 First article inspection. First article inspection shall include all the tests specified herein except chemical analysis. The sample forging(s) shall be formed from stock of the composition, size, configuration, and grain orientation, and shall be forged by the technique and finished in the dies which will be used throughout the production of the respective design. The forgings shall be heat treated at the same conditions as will be used in production, in the furnaces and equipment used in production heat treating operations.

4.2.2 Forging stock. Incoming stock for use in both first article and production forgings shall be analyzed for chemical composition.

4.2.3 Quality conformance inspection. Quality conformance inspection shall include examination of product, transverse mechanical properties, microstructural examination, penetrant inspection of parts after removal of contaminated surface zones, and ultrasonic inspection for internal defects. Examination of product shall be applicable to both rough forgings and finished parts. Mechanical properties shall be tested on a transverse sample for one forging from each heat of materials. The specimen shall be machined from a transverse slice cut from one end of a heavier section of the forging following heat treatment. An etched section from the same sample shall be examined for compliance with the grain size and phase ratio requirements for alpha beta and beta alloys (3.4 through 3.4.2.2), and a portion of the sample analyzed for hydrogen content.

4.3 Production lot. A lot shall consist of first article and production forgings of a single configuration from one heat of forging stock, heat treated at one time and submitted for inspection at one time. Each item constitutes a lot when 100 percent inspection is accomplished.

4.4 Examination

4.4.1 Examination of product. Seven samples, or the entire lot if less than seven items, shall be visually examined for conformance with requirements for identification (3.10), workmanship (3.11), and dimensions as indicated by the forging drawing.

4.5 Tests

4.5.1 Chemical composition Samples taken from the top and bottom of each ingot, or from billet or bar locations which represent the top and bottom of the respective ingot, shall be analyzed by wet chemical, spectrographic, or other acceptable analytical methods, for all the elements indicated by table II of MIL-T-9047. Analysis for hydrogen shall be by the vacuum hot extraction or vacuum fusion method on a portion of the sample provided for quality conformance inspection (see 4.2.2).

4.5.2 Metallographic structure. The as-forged first article sample shall be sectioned on a plane through the maximum tensile load paths at locations indicated by the drawing The section shall be suitably etched, and examined for compliance with grain flow patterns (3.4.1), grain size and uniformity of structure (3.4), depth of surface contamination (3.1.3), and in alpha beta alloys, the relative amount of equiaxed alpha structure (3.4.2.1). Hollow sections to be internally pressurized in service shall be sectioned on two planes at 90 degrees, at least one of which shall be parallel to hoop stresses, and both sections prepared and examined. Evidence of failure to meet specified requirements, including evidence of flash formation across hoop stress paths, shall cause rejection of the forging technique which the first article sample represented.

4.5.2.1 Routine quality control. Evidence of unacceptable surface contamination shall be determined by microstructure of a section through an outer surface. Forging shall not show evidence of an oxygen-diffused layer as evidenced by concentration of alpha phase near the surfaces and extending to a depth in excess of the limits specified in 3.2.3.

4.5.3 Mechanical properties Two tensile specimens shall be cut from positions midway between surface and center from the transverse slice as provided by 4.2.2 and from first article samples at such locations (at least 5 locations when forging size permits) as specified by design drawings (3.2). Specimens shall conform to one of the types and configurations indicated by ASTM E8-66 or figure 1 and shall be tested in accordance with ASTM E8. Measurements shall include transverse reduction of area.

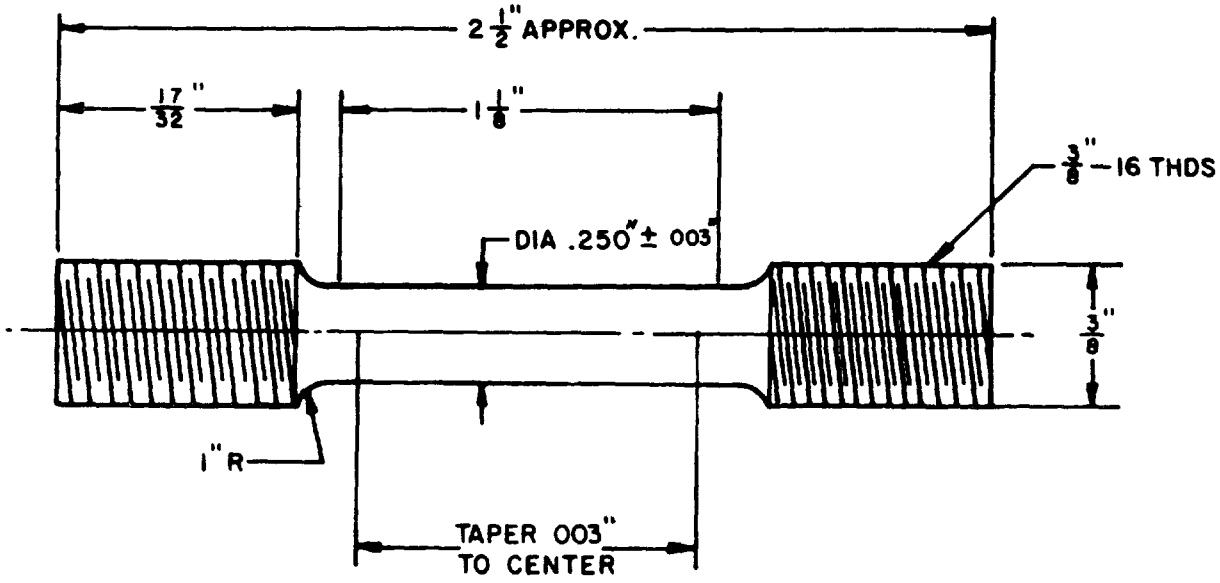

Figure 1. Subsize Specimen for Tensile Tests.

4.5.4 Penetrant. Parts shall be cleaned by vapor blasting or etched in nitric-hydrofluoric acid solution, dried, and while at approximately 130°F temperature, dipped in fluorescent penetrant solution. In other respects the test method shall conform to the requirements of MIL-I-6866.

4.5.5 Ultrasonic. Testing shall comply with the requirements of MIL-I-8950 class AA requirements for section sizes to 3 inches in thickness and class A requirements for larger section sizes.

4.5.6. Grain size. The average grain size shall be measured by methods as specified by ASTM E112-63.

4.6 Rejection. Failure of a specimen to meet the respective requirement shall be cause for rejection of the forging technique employed if the specimen represented a first article sample. When the specimen or specimens represent a routine production control lot, the lot shall be rejected. At the discretion of the vendor, retesting will be permitted. A retest sample of five specimens shall be tested to replace each failed specimen from the original sample. The failure of one retest specimen shall cause rejection of the lot with no further retesting permitted.

5. PREPARATION FOR DELIVERY

5.1 Packaging and packing. Forging shall be prepared for shipment in accordance with commercial practice to assure transportation by common carrier and safe delivery at destination.

6. NOTES

6.1 Intended use. This specification is intended for use in the procurement of high strength titanium alloy forgings for use in high performance aerospace equipment.

6.1.1 The product defined by this specification is a contamination-free forging with surface removals accomplished as necessitated by the processes of forging and heat treatement as prescribed by this specification.

TABLE III. Correlation

MIL-T-9047C	MIL T-9047D	MIL-F-83142	MIL-F 83142A & MIL-T-9047E
Class 1 - unalloyed	Type I - Commercially pure titanium Composition A - unalloyed	Type I - Commercially pure Composition 1 - unalloyed	Alpha Alloys Composition 1 - unalloyed
Class 2 - 5Al-2.5Sn	Type II - Alpha titanium alloys Composition A (5Al-2.5Sn)	Type II - Alpha alloys Composition 2 - 5Al-2 5Sn	Composition 2 - 5Al-2.5Sn
1/ Class 3 - 3Al-5Cr	Composition B (5Al-2.5Sn ELI)	Composition 3 - 5Al-2 5Sn ELI	Composition 3 - 5Al-2.5Sn ELI
1/ Class 4 - 2Fe-2Cr-2Mo	Composition C (5Al-5Zr-5Sn)	Composition 4 - 5Al-5Zr-5Sn	Composition 4 - 5Al-5Zr-5Sn
-	Composition D (8Al-1Mo-1V)	Composition 5 - 8Al-1Mo-1V	Composition 5 - 8Al-1Mo-1V
Class 5 - 6Al-4V	Type III - Alpha beta titanium alloys Composition A (6Al-4V)	Type III - Alpha beta alloys Composition 6 - 6Al-4V	Alpha beta alloys Composition 6 - 6Al-4V
-	Composition B (6Al-4V ELI)	Composition 7 - 6Al-4V ELI	Composition 7 - 6Al-4V ELI
-	Composition C (6Al-6V-2Sn)	Composition 8 - 6Al-6V-2Sn	Composition 8 - 6Al-6V-2Sn
-	Composition D (7Al-4Mo)	Composition 9 - 7Al-4Mo	Composition 9 - 7Al-4Mo
1/ Class 6 4Al-4Mn	1/Composition E (4Al-4Mn)		
Class 7 - 5Al-1.5Fe-1 5Cr-1 5Mo	Composition F (5Al-1 5Fe-1.5Cr-1.5Mo	1/Composition 10 - 5Al-1 5Fe-1 5Cr-1.5Mo	
	Composition G (11Sn-5Zr-2Al-1Mo)	Composition 11 - 11Sn-5Zr-2Al-1Mo	Composition 10 - 11Sn-5Zr-2Al-1Mo
	Composition H (4Al-3Mo-1V)	1/Composition 12 - 4Al-3Mo-1V	
	Composition I (6Al-2Sn-4Zr-2Mo)	Composition 13 - 6Al-2Sn-4Zr-2Mo	Composition 11 - 6Al-2Sn-4Zr-2Mo
	Type IV - Beta titanium alloys Composition A (13V-11Cr-3Al)	Type IV - Beta alloys Composition 14 - 13V-11Cr-3Al	Beta alloys Composition 12 - 13V-11Cr-3Al Composition 13 - 11 5-6Zr-4.5Sn

1/ Commercially unavailable

6.2 Ordering data. Procurement documents should specify the following:

a. Title, number, and date of this specification

b. Forging drawings indicating:

(1) Configuration, dimensions, and tolerances for as-forged part

(2) Location and direction of major applied load paths

(3) Alloy composition designator

(4) Location of parting lines when permissible (3.2.1 and 3.2.2)

(5) Whether the finished part will be in the fully hardened or annealed condition when placed in service.

6.3 Cross-reference. Table III shows the correlation between material composition designators used by this specification and previous type and composition designators used in MIL-T-9047C and MIL-T-9047D.

6.4 Condition designators. Code letters are recommended for use in drawing call-outs for heat-treat condition.

Custodian:
Air Force - 11

Preparing activity:
Air Force - 11

Review activity:
Air Force - 84

Project No. 1500-F009

☆ U. S. GOVERNMENT PRINTING OFFICE 1977-703-020/2533

SPECIFICATION ANALYSIS SHEET

Form Approved
Budget Bureau No 22-R255

INSTRUCTIONS This sheet is to be filled out by personnel, either Government or contractor, involved in the use of the specification in procurement of products for ultimate use by the Department of Defense This sheet is provided for obtaining information on the use of this specification which will insure that suitable products can be procured with a minimum amount of delay and at the least cost Comments and the return of this form will be appreciated Fold on lines on reverse side, staple in corner, and send to preparing activity Comments and suggestions submitted on this form do not constitute or imply authorization to waive any portion of the referenced document(s) or serve to amend contractual requirements

SPECIFICATION

ORGANIZATION

CITY AND STATE

CONTRACT NUMBER

MATERIAL PROCURED UNDER A

☐ DIRECT GOVERNMENT CONTRACT ☐ SUBCONTRACT

1 HAS ANY PART OF THE SPECIFICATION CREATED PROBLEMS OR REQUIRED INTERPRETATION IN PROCUREMENT USE?

A GIVE PARAGRAPH NUMBER AND WORDING

B RECOMMENDATIONS FOR CORRECTING THE DEFICIENCIES

2 COMMENTS ON ANY SPECIFICATION REQUIREMENT CONSIDERED TOO RIGID

3 IS THE SPECIFICATION RESTRICTIVE?

☐ YES ☐ NO *(If "yes", in what way?)*

4 REMARKS *(Attach any pertinent data which may be of use in improving this specification If there are additional papers attach to form and place both in an envelope addressed to preparing activity)*

SUBMITTED BY *(Printed or typed name and activity - Optional)*

DATE

DD FORM 1 JAN 66 **1426**

REPLACES EDITION OF 1 OCT 64 WHICH MAY BE USED

AFLC-WPAFB-OCT 67 2M

ASD(ASNPS)
Wright-Patterson AFB, O 45433

POSTAGE AND FEES PAID

UNITED STATES AIR FORCE
OFFICIAL BUSINESS

ASD(ASNPS)
Wright-Patterson AFB, O 45433